Thunder Tiger

mini Titan V2

INSTRUCTION MANUAL

組裝說明書

No.4712

Thunder Tiger 雷虎科技

THUNDER TIGER CORPORATION

www.thundertiger.com

Printed in China

This radio control model car is not a toy! Before beginning assembly, please read this manual thoroughly.

本產品為高性能模型非一般玩具，組裝與操作前請詳閱本產品說明書。

The contents are subject to change without prior notice due to product improvements and specificatrion changes.

本套件所附之零件可能跟圖示有所差異。因產品後續之設計研發或功能不斷改善之原因，我們將保留產品規格變更權力，不再另行通知使用者。

Thunder Tiger

mini Titan V2

CONTENTS

Introduction

INTRO & CAUTION / 簡介與注意事項 — 2
OTHER ITEMS REQUIRED / 其餘必須配件 — 4
ASSEMBLY / 組裝步驟 — 5
- MAIN ROTOR / 主旋翼機構組裝 — 6
- LINKAGE ROD INSTALLATION / 連桿組裝 — 12
- MAIN FRAME ASSEMBLY / 本體組裝 — 13
- TAIL UNIT ASSEMBLY / 尾管組裝 — 17
- TAIL BOOM BRACKET SET / 尾管固定座組裝 — 21
- ELECTRIC SYSTEM / 電子系統 — 23
- CANOPY ASSEMBLY / 機艙罩組裝 — 27
- MAIN ROTOR BLADE ASSEMBLY / 主旋翼組裝 — 28

INTRODUCTION OF E-CCPM CONTROL SYSTEM / E-CCPM 控制系統介紹 — 29
MOVEMENT OF 120° E-CCPM SYSTEM / E-CCPM 120° 說明 — 30
SERVO CONNECTING / 伺服機連結 — 32
BASIC CONCEPT OF ADJUSTMENT / 基礎設定與調整 — 33
SETTING UP OF LINKAGE / 連桿設定 — 38
SETTING UP MAIN ROTOR COLLECTIVE PITCH ANGLE / 主旋翼螺距設定 — 39
SETTING UP DATA FOR YOUR REFERENCE / 設定參考值 — 40
USING OF LI-PO BATTERY / 鋰聚電池使用注意事項 — 42
TROUBLE SHOOTING / 問題排除 — 43
HELI ACCESSORIES / 選購配件 — 45
- BALL LINK REAMER (ø3.8MM) 球頭絞刀 — 45
- ONE WAY BEARING RELEASER 單向軸承退出器 — 46
- BLADE BALANCER 主旋翼平衡器 — 47
- TRAINING GEAR 直昇機練習架 — 52
- ACE RC T3AC BALANCE CHARGER FOR LI-PO BATTERY / T3AC平衡功能鋰電池專用充電器 — 53

SPARE PARTS / 零件表 — 54
OPTION PASTS & ACCESSORIES / 選購零配件 — 62
SPECIFICATION & FEATURES / 規格表 & 特色 — 64

Thunder Tiger

INTRODUCTION / 簡介

Thank you for purchasing the Thunder Tiger mini Titan E325 V2 electric R/C helicopter. This new helicopter is the latest innovation by Thunder Tiger. It has the perfect combination of flying stability and the agility for 3D flying. This helicopter is an excellent choice for flying enthusiasts like you. For convenient assembly and safe operation of the helicopter, please read the instructions carefully. Retain the user manual in case you need it for any information or reference.

感謝您購買雷虎科技小型電動直昇機 mini Titan E325 V2 產品，本項產品為雷虎科技全新開發機種，兼具高度穩定性與3D飛行特性，是熱衷小型電動直昇機的您不可錯過的選擇。請於使用本產品前詳盡閱讀使用手冊，以利於組裝工作順暢進行與安全操控本產品。請妥善保存使用說明書，以利後續調整與維修參考用途。

CAUTION / 警告

1. R/C models are not toys. This product is a high-precision flying machine. Possibilities of unexpected crashes may occur due to electronic interference, incorrect operation, or poor mechanical maintenance. Although it is a small-sized helicopter, the rotor blades rotate at high speeds, which may cause serious damage, injury, or death if the model hits people or property. Therefore, extreme caution must be exercised during operation.
2. Thunder Tiger ensures parts packaged in this product is of the highest quality. However, after assembly and usage, parts damaged due to wear or misuse will not be replaced under any circumstances. If you have any questions regarding its operation and repair, Thunder Tigers service agents are able to provide free technical guidance.
3. This product is only recommended for users ages 16 and up. Because flying a R/C helicopter is difficult, beginners must receive guidance and supervision from experienced pilots to minimize unexpected danger. Practice in spacious areas, far away from obstacles such as buildings, trees, electrical towers, or crowds.
4. To decrease the cost of repair and maintenance for beginners, it is recommended to fly the helicopter with a practice rack and to learn basic flying skills with a computer R/C flying simulator. (Crashes in simulators are free to repair!)

1. 本項遙控直昇機產品並不是玩具，是一項結構精密、高專業度模型產品，如果未經正確組裝與操控，將可能對操控者或其他人造成身體傷害。使用者必須了解，若未確實進行飛行前安全檢查或操控不當，而造成人員受傷或物體損壞，使用者必須負起法律責任。
2. 本產品由高品質零組件組成，雷虎科技對於安裝過程、使用過後..等人為因素造成損壞事件不負損壞賠償之責。如您需要本產品相關組裝、調整或其他協助，可與雷虎科技全省經銷商聯繫。
3. 本項產品禁止十六歲以下青少年與孩童使用。強烈建議初學者應取得技術支援後再進行飛行，以避免危險發生。請於空曠地區操控本產品，並避免於建築物、樹木、電塔..等障礙物區域飛行。
4. 建議初學者可安裝練習架或透過電腦模擬軟體練習，可達到實際練習效果與符合經濟效益。

AMA INFORMATION / 特別注意事項

Operating a model helicopter requires a high degree of responsibility and skill. If you are a newcomer to the hobby, it is best to seek help and guidance from accomplished model helicopter pilots. This will greatly speed up the learning process and have you flying successfully in a reasonable amount of time. We also would strongly urge you to join the Academy of Model Aeronautics. The AMA is a non-profit organization that provides its members with a liability insurance plan as well as monthly magazine entitled Model Aviation. All AMA charter aircraft clubs require all pilots to hold a current AMA sporting license prior to operation of their models at club fields. For further information, contact the AMA at:

Academy of Model Aeronautics
5151 East Memorial Drive
Muncie, IN 47302
(317) 287-1256

操控遙控直昇機對於飛行安全要求極高，需要高度的負責任態度配合，以及較高的操控技巧。如果您是一位初學者，建議您必須向當地專業模型經銷商，或是遙控直昇機相關組織以及經驗豐富的玩家尋求相關協助，以獲得您所需要的訊息以及專業知識。如此可有效協助您縮短學習的時間，更容易學會遙控直昇機的組裝、設定與操控技巧。

FLIGHT SAFETY CHECKLIST / 飛行前安全確認工作項目

1. Make sure that the transmitter battery is fully charged before flying.
2. Make sure all control surfaces are operated properly before flying.
3. Do a range check of the radio before the first flight. The electronic equipment must operate properly at a range of at least 5 meters (18 ft) even with the transmitter antenna collapsed.
4. Make sure there are no other pilots using the same radio frequency with yours and that there are no other radio interference on your frequency.
5. Be sure to turn on the transmitter first with the throttle stick in the idle position. Plug the battery into the ESC last.
6. The main rotor and the tail rotor spin at very high RPM. Make sure nothing can come in contact with the rotor blades during flight.
7. Always maintain a safe distance from the helicopter during flight.
8. Never fly the helicopter in the rain or in excessive wind conditions.
9. Always operate and fly the helicopter in a safe and responsible manner.
10. Never fly the helicopter over other pilots, spectators, cars or anything that could result in injury or property damage.

1. 確認接收機與發射機電池，均已確實充電完成。
2. 確認所有操控介面運作順暢。
3. 確認無其他無線電波干擾，且不與其他同好同時使用相同頻率。
4. 確實將油門搖桿放置於低速，再將發射機電源開啟，然後再將電池接上。
5. 確認遙控器發射器與接收機工作正常，將機體放至於距離5公尺外，確認遙控器是否正常，機體控制動作是否正確。
6. 主旋翼與尾旋翼轉速相當高，運轉時須避免任何障礙物與旋翼接觸。
7. 飛行時，需與遙控直升機保持安全距離。
8. 勿於下雨天或是強風的狀態下操控遙控直升機。
9. 請以安全為第一考量，並以高度負責任的態度參與遙控直升機活動。
10. 禁止於人群、車輛..或任何其他障礙物上方飛行遙控直升機，避免意外發生。

POST FLIGHT INSPECTION / 飛行結束安全檢查事項

1. Inspect the model thoroughly to insure no parts have come loose or become damaged during the flight and landing. Replace damaged parts and tighten loose screws before flying again.
2. Clean the helicopter body.
3. Lubricate all moving parts to ensure smooth operation for the next flying.
4. Replace any worn ball links and damaged bearings.
5. Store the model in a cool, dry place. Avoid putting it under direct sunlight or near a source of heat.

Following these simple rules will allow you to enjoy the thrill of model helicopter flying for many years.

1. 飛行結束後確認機體所有的零件與螺絲是否有損壞或鬆動，更換損壞零件與確實固定鬆動的螺絲。
2. 機體清潔乾淨。
3. 檢查所有活動零組件是否運作順暢，以利下次飛行。
4. 更換所有鬆動的連桿、接頭，以及損壞的軸承。
5. 將機體存放於陰涼通風處，避免機體放置於陽光直射處或接近熱源。

確實執行上述幾項簡單的步驟，將可確保您的愛機維持數年的壽命！

CAUTION / 注意事項

When the model has crashed, inspect the flybar, rotor shaft and the blade spindle to make sure they are not bent. If any item is damaged, it must be replaced with a new part to ensure safe operation. Do not glue any broken or damaged plastic parts. Do not repair broken rotor blades. It is very important to inspect the motor, speed control and the battery.

Always inspect the following items:

Gears, Ball links, Link rods, Bearings, Main shaft, Flybar, Spindle, Tail boom and support, Fins, Tail rotor shaft, Belt, Main blades, Tail blades, the Motor, the Speed control and the Battery.

機體一但發生墜落事件，請確實檢查平衡桿、主軸、橫軸是否有彎曲變形，如果有任何的損壞，請立即更換原廠新的零組件，確認機體操作安全！切勿使用任何接著劑嘗試黏合塑膠零件；請勿使用修復過的主旋翼。馬達、速控器、電池的安全檢查工作亦相當重要。

發生機體墜落事件後，請確實檢查下列項目：

齒輪組、球頭連桿、連桿頭、軸承、主軸、橫軸、尾軸、平衡桿、平衡片、尾管、尾管支撐架、垂直與水平尾翼、尾驅動輪、皮帶、主旋翼、尾旋翼、馬達、速控器、電池。

OTHER ITEMS REQUIRED / 另購裝備

■ RADIO SET 遙控器組

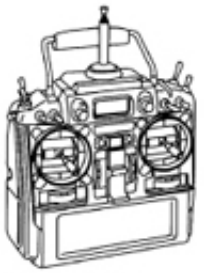

Transmitter
(helicopter type only,
6 or more channels)
發射機（6動以上直昇機用）

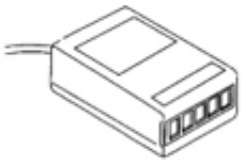

Receiver
接收機

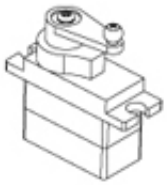

Servos
(Control Surface x3,
Rudder Servo x1)
伺服機 x3、尾舵伺服機 x1

Gyro
陀螺儀

■ POWER SYSTEM 電子類裝備

Li-Po Battery
鋰聚合物電池

Speed Controller
速控器

Brushless Motor
無刷馬達

Battery Charger
充電器

■ TOOLS REQUIRED FOR ASSEMBLY 組裝工作所需工具

Screw Driver
螺絲起子

Needle Nose Pliers
尖嘴鉗

Ball Link Pliers
連桿專用鉗

Nipper
斜口鉗

Scissors
剪刀

Hobby Knife
模型專用美工刀

CA Glue
快乾膠

Threadlocking
螺絲防鬆膠

Grease
潤滑油

Hex Wrench
六角板手

Epoxy
環氧樹指
（A、B膠）

Rubber Band
橡皮筋

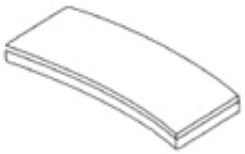

Two-Sided Rubber
雙面膠

ASSEMBLY / 組裝步驟

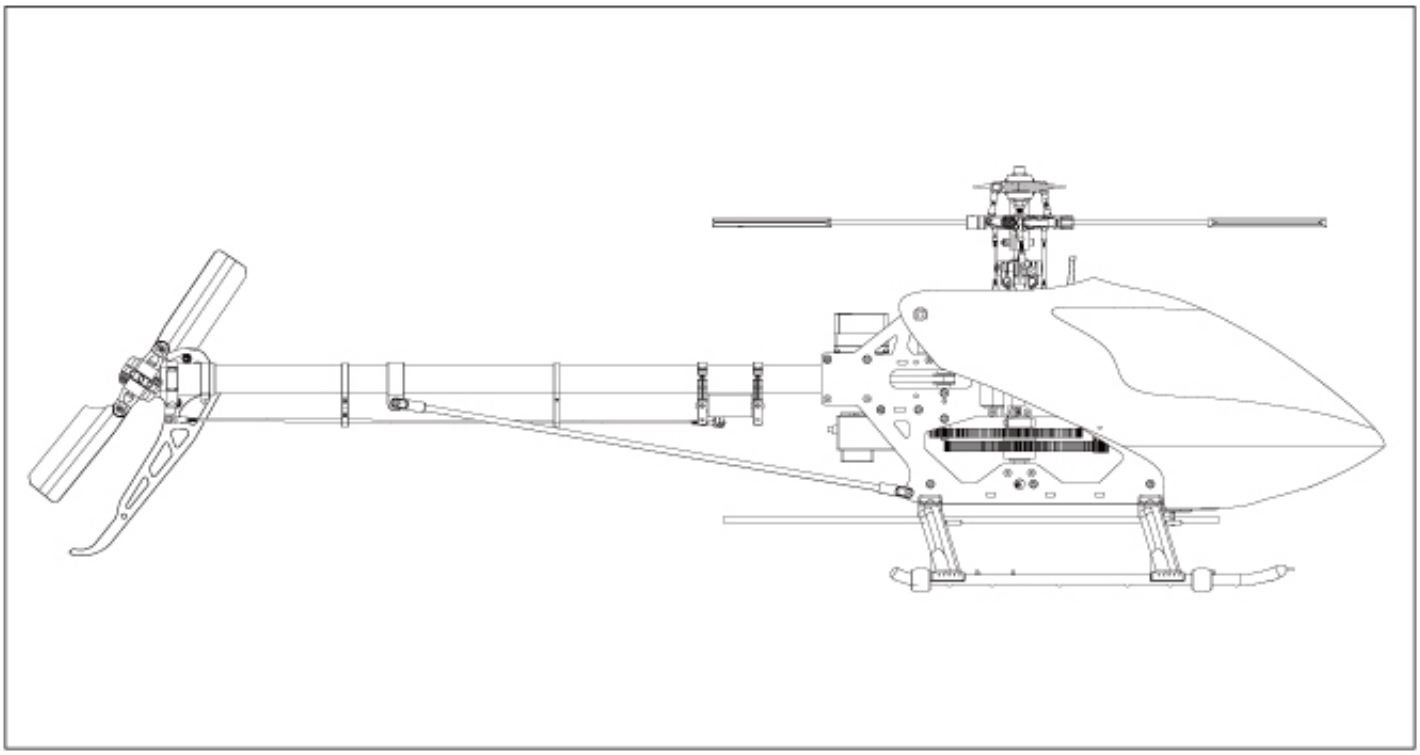

The parts in the mini Titan E325 V2 are packed according to each major assembly steps. The part number and quantity are always shown in the square box on each page. As good practice, only open up the bag that you need for the paticular assembly.
零件均依照組裝步驟包裝，請依照組裝程序，逐一開啓零件包，避免零件遺失。

Note / 注意
Assembly drawings will contain icons that indicate use of Threadlocking or CA glue as needed.
Examples of the icons are as right shown:
請依組裝步驟圖示，使用防鬆膠或接著劑。
圖示範例如右：

T22 —►THREADLOCKING / 螺絲防鬆膠

CA —►CA GLUE / 快乾膠

Main Rotor-1 / 主旋翼機構組裝-1

No.	Material No.	Description	名稱	Qty
1	BV1408	MATEL MAIN ROTOR HUB SET	金屬主旋翼固定座組	1
2	BV1403	METAL SEESAW HUB	金屬穩定桿固定座組	1

No.	Material No.	Description	名稱	Qty
3	BK1456	COLLAR, d2×D3×2.7t	軸環, d2×D3×2.7t	2
4	HNU2-6Z	SHOULDER SCREW M2x6	圓頭十字軸套螺絲M2×6	2

BK1456
COLLAR, d2×D3×2.7t
軸環, d2×D3×2.7t

HNU2-6Z
SHOULDER SCREW M2x6
圓頭十字軸套螺絲M2×6

Step 1 / 步驟一

1. Slide the Metal Seesaw Hub into the Main Rotor Hub.
2. Note the orientation of the Metal Seesaw Hub.
1. 將主旋翼固定座穿過穩定桿固定座。
2. 注意穩定桿固定座安裝方向。

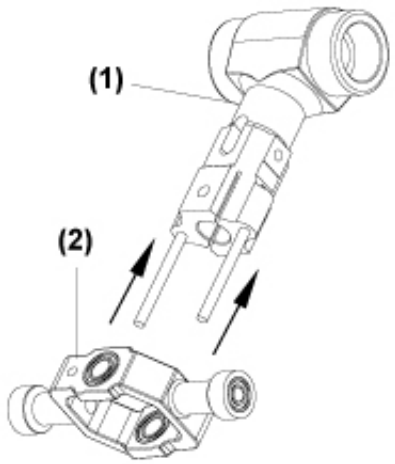

Step 2 / 步驟二

1. Rotate the Metal Seesaw Hub toward for 90 degree.
2. Note the orientation of the Chamfer on the Metal Seesaw Hub.
1. 90度旋轉穩定桿固定座。
2. 注意金屬穩定固定座倒角方向。

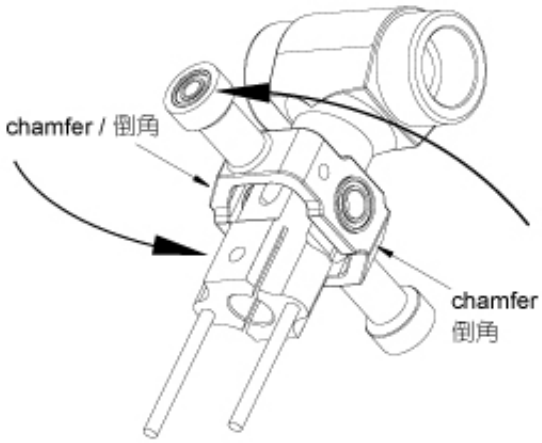

Step 3 / 步驟三

Fit the Collar into the bearings, tighten the screws and ensure the Metal Seesaw Hub runs effortlessly.
如圖示，鎖緊固定螺絲，並確認穩定桿固定座能自由活動。

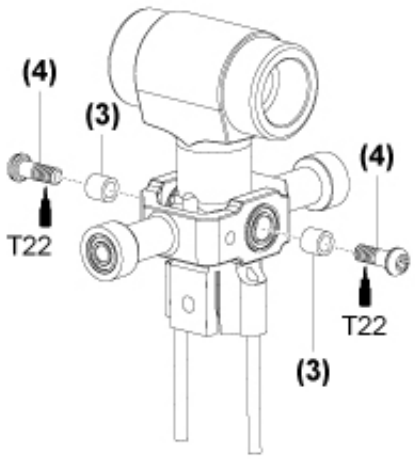

Completed View
組裝完成

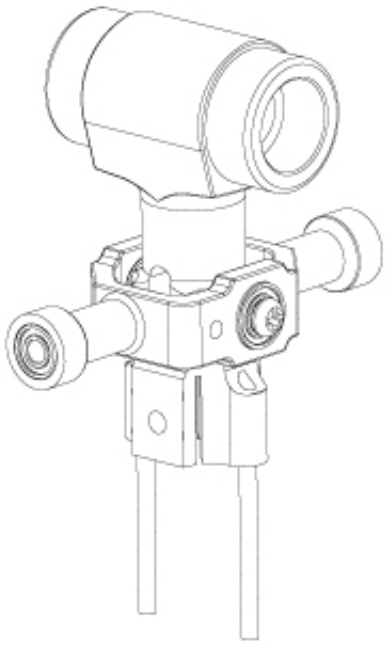

Main Rotor-2 / 主旋翼機構組裝-2

No.	Material No.	Description	名稱	Qty
1	BV1404	METAL MIXING LEVER	金屬控制搖臂組	2
2	BK1480	COLLAR, d2×D3×5.6t	軸環, d2×D3×5.6t	2
3	BK1203	LINKAGE BALL(ø3.8)	連接頭(ø3.8)	4

No.	Material No.	Description	名稱	Qty
4	HSP16-6N	COUNTERSUNK SCREW M1.6×6	圓頭十字螺絲M1.6×6	4
5	BK1481	FLAT WASHER d2xD3.7x0.5t	墊片d2xD3.7x0.5t	2
6	HNU2-9Z	SHOULDER SCREW M2x9	圓頭十字軸套螺絲M2×9	2

BK1480
COLLAR, d2×D3×5.6t
軸環, d2×D3×5.6t

BK1203
Linkage Ball(ø3.8)
連接頭(ø3.8)

HSP16-6N
Countersunk Screw M1.6×6
圓頭十字螺絲M1.6×6

BK1481
FLAT WASHER d2xD3.7x0.5t
墊片d2xD3.7x0.5t

HNU2-9Z
SHOULDER SCREW M2x9
圓頭十字軸套螺絲M2×9

Step 1 / 步驟一

Secure the Linkage Balls to the Mixing Lever.
依圖示，安裝控制臂球頭，並適量使用螺絲防鬆劑。

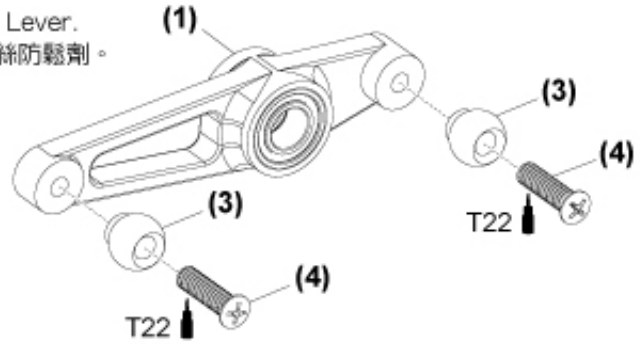

L/R Assemble left and right side the same way
左右側組件相同

Step 2 / 步驟二

1. Secure the Metal Mixing Lever to the Metal Seesaw Hub.
2. Make sure the Metal Mixing Lever runs effortlessly.
1. 將金屬控制臂安裝於金屬穩定桿固定座，並適量使用螺絲防鬆劑。
2. 確認控制臂能自由動作，無干涉及過鬆現象。

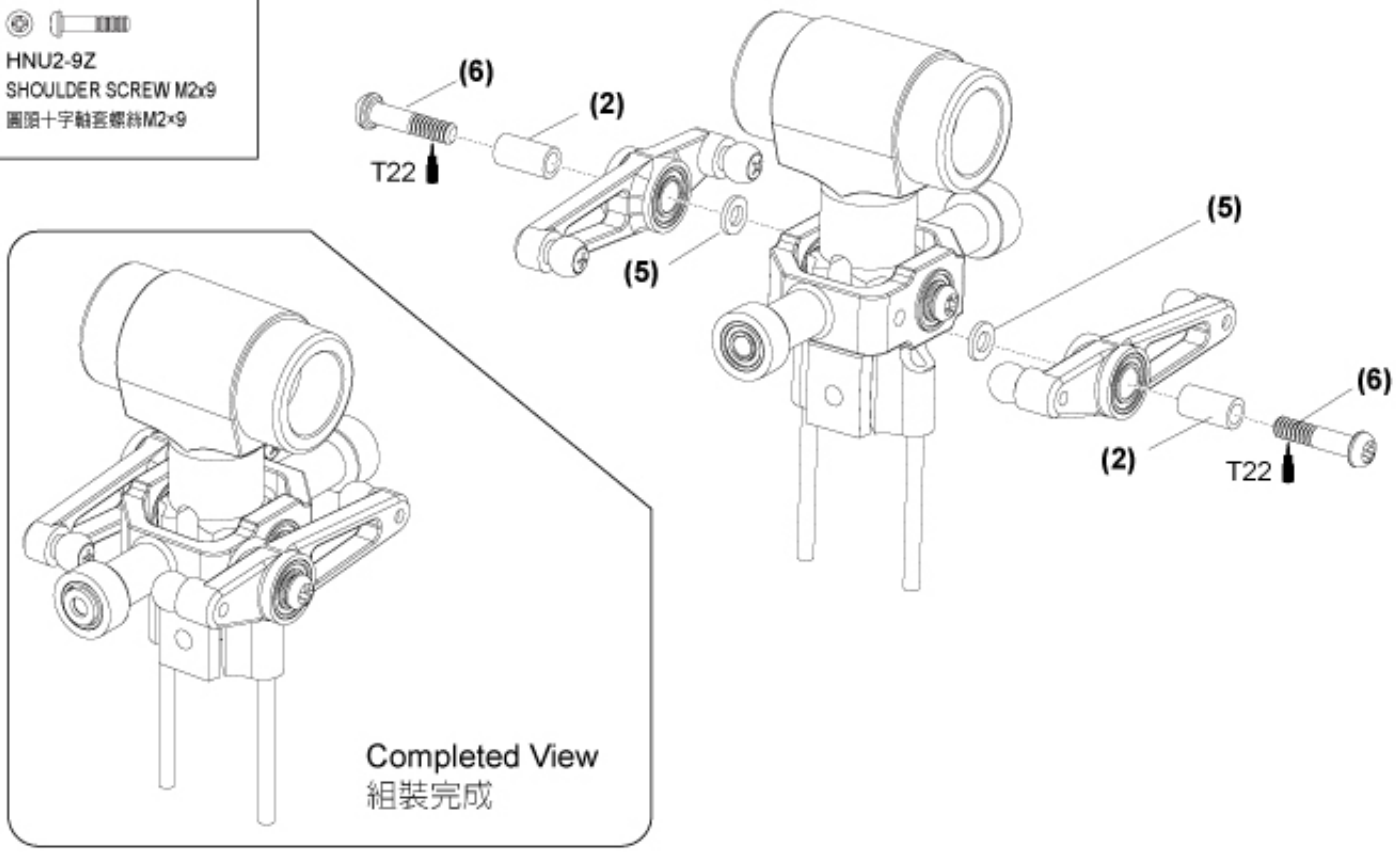

Main Rotor-3 / 主旋翼機構組裝-3

No.	Material No.	Description	名稱	Qty
1	BK1499	M. FLYBAR C. ARM-1	金屬穩定翼轉臂-1	2
2	BK1500	M. FLYBAR C. ARM-2	金屬穩定翼轉臂-2	2
3	BK1203	LINKAGE BALL(ø3.8)	連接頭(ø3.8)	2
4	HSP16-6N	COUNTERSUNK SCREW M1.6×6	圓頭十字螺絲M1.6×6	2

No.	Material No.	Description	名稱	Qty
5	BK1410-1	SUS FLYBAR ROD	不鏽鋼穩定桿	1
6	HME3-3B	SET SCREW M3×3	無頭內六角螺絲M3×3	2
7	BK1413	FLYBAR PADDLE（GREEN LIGHT）	穩定翼（綠）	2

BK1203
Linkage Ball(ø3.8)
連接頭(ø3.8)

HSP16-6N
Countersunk Screw M1.6×6
圓頭十字螺絲M1.6×6

HME3-3B
SET SCREW M3×3
無頭內六角螺絲M3×3

Step 1 / 步驟一

1. Secure the Linkage Ball to the Metal Flybar Contorl Post.
2. Assemble the Metal Flybar Control Post and the Metal Flybar Control Arm.
1. 牢固的將球頭安裝於金屬穩定翼轉臂柱上。
2. 將金屬穩定翼轉臂柱及金屬穩定翼臂裝配完成。

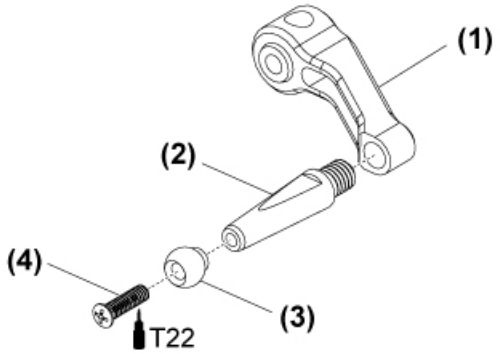

L/R Assemble left and right side the same way
左右側組件相同

Step 2 / 步驟二

1. Insert the Flybar Rod through the Metal Flybar Control Arms & the Metal Seesaw Hub.
2. Ensure the Flybar Rod have equal protrusion from each side of the Metal Flybar Control Arms.
3. Line up the holes of the Metal Flybar Control Arms and the flat spot of the Flybar Rod, and then screw the Metal Flybar Control Arms & the Flybar Rod tightly.
1. 將穩定桿穿過金屬穩定翼控制臂、金屬穩定桿固定座和金屬旋翼固定座。
2. 確認穩定桿凸出金屬穩定翼控制臂兩側等距。
3. 對正金屬穩定翼控制臂上鎖固孔與穩定翼桿上平面凹槽後，再鎖緊螺絲。

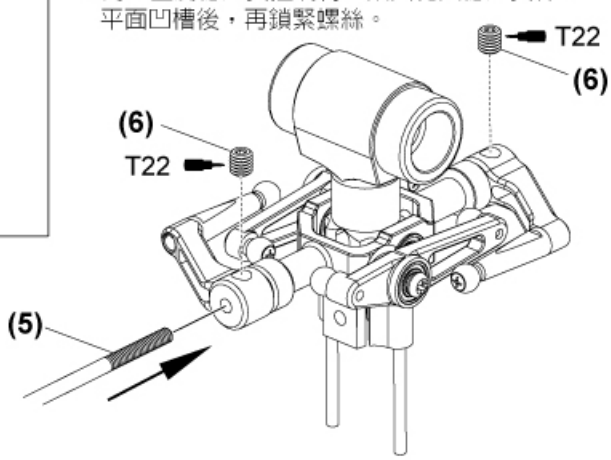

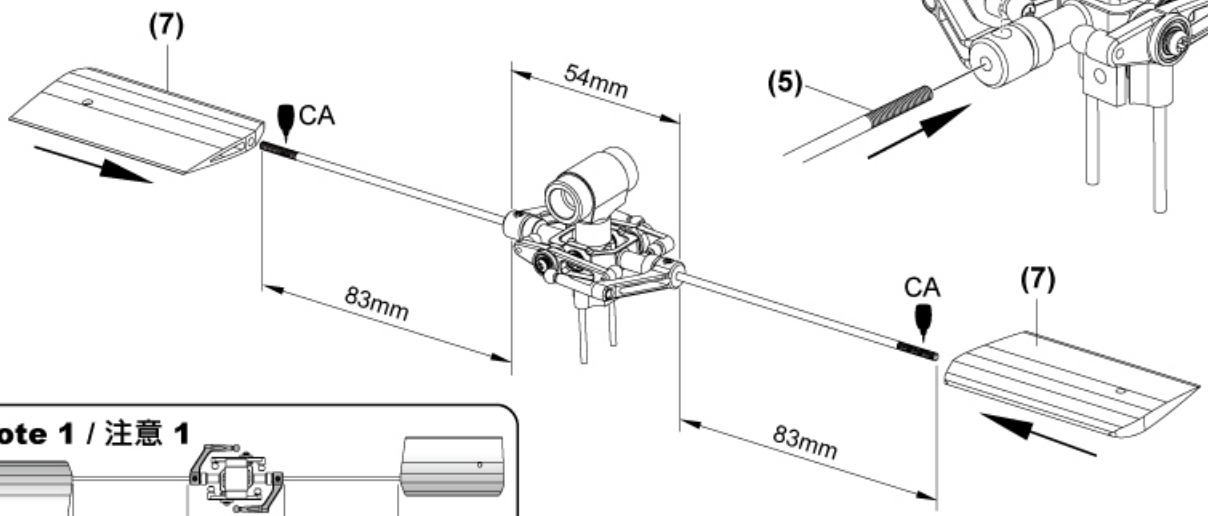

Note 1 / 注意 1

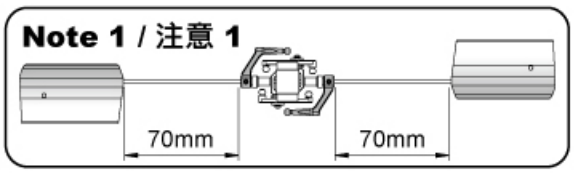

Note 2
注意 2

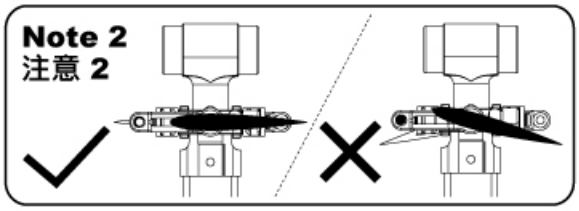

Step 3 / 步驟三

1. Thread the Paddles onto the Flybar Rod, equal the length to the Flybar Control Arms of each side.
2. Ensure the leading edges of the Paddles are toward the same side to the Metal Flybar Control Posts.
3. Line up the Paddles with the Flybar Control Arms.
1. 旋上穩定翼於穩定翼桿上，確認兩側的穩定翼至控制臂距離相等。
2. 確認穩定翼前緣與穩定翼控制轉臂方向相同。
3. 對正穩定翼與穩定翼控制臂呈水平狀態。

2 kinds of paddle set included in this KIT:
- The white paddle set (6.6 gr/per piece) is for less control sensitivity.
- The green paddle set (4.4 gr/per piece) is for 3D flying.

套件內附兩組穩定翼，請依個人飛行習慣選用：
- 白色穩定翼（單片6.6公克）適合穩定飛行使用。
- 綠色穩定翼（單片4.4公克）適合特技飛行使用。

Main Rotor-4 / 主旋翼機構組裝-4

No.	Material No.	Description	名稱	Qty
1	BK1203	LINKAGE BALL(ø3.8)	連接頭(ø3.8)	2
2	HSP16-6N	COUNTERSUNK SCREW M1.6×6	圓頭十字螺絲M1.6×6	2
3	BV1402	METAL ROTOR GRIP	金屬旋翼轉座組	2
4	BK0906	FEATHERING SHAFT	主旋翼固定軸	1

No.	Material No.	Description	名稱	Qty
5	BK1900	FLAP DAMPER	避震墊圈	2
6	BK1079	COLLAR	軸環	2
7	HMO26	FLAT WASHER d2.6	華司d2.6mm	2
8	HMC26-8B	SOCKET SCREW M2.6×8	內六角螺絲M2.6×8	2

BK1203
LINKAGE BALL(ø3.8)
連接頭(ø3.8)

HSP16-6N
COUNTERSUNK SCREW M1.6×6
圓頭十字螺絲M1.6×6

BK1079
COLLAR
軸環

HMO26
FLAT WASHER d2.6
華司d2.6mm

HMC26-8B
SOCKET SCREW M2.6×8
內六角螺絲M2.6×8

Step 1 / 步驟一

1. Secure the Linkage alls to the Main Rotor Grips.
2. Insert the Flap Damper into the Main Rotor Hub.
3. Insert the Feathering Shaft through the Flap Dampers & the Main Rotor Hub with some amount of silicon oil or Vaseline. Center the Feathering Shaft in the Main Rotor Hub.
4. Apply Locitite on the Socket Screw (M2.6x 8, #8),and then secure the Main Rotor Grips on the Feathering Shaft with bearings & washers tightly.

1. 將連桿接頭固定於主旋翼夾座。
2. 將旋翼橫軸避震套環置入主旋翼夾座內。
3. 可塗抹些許矽膠油脂或凡士林於旋翼橫軸避震套環上，以便安裝。
4. 依圖示，組裝金屬主旋翼固定座，使用M2.6X8內六角螺絲鎖入橫軸時需使用螺絲防鬆膠。

Note / 注意

The radial & thrust bearings inside the Main Rotor Grips are factory pre-assembled. The below drawing is for your reference.
止推軸承及滾珠軸承已由原廠組裝完成，參考如下圖示：

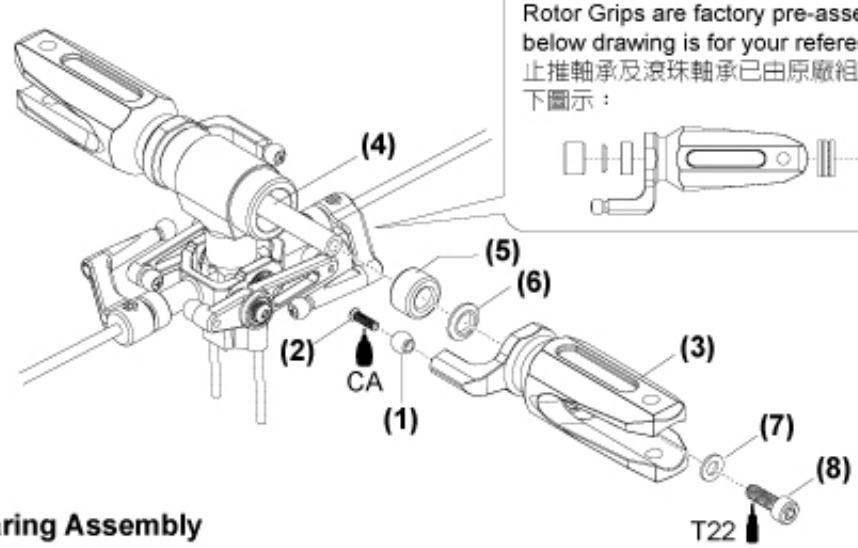

Diagram for Thrust Bearing Assembly
止推軸承安裝示意圖

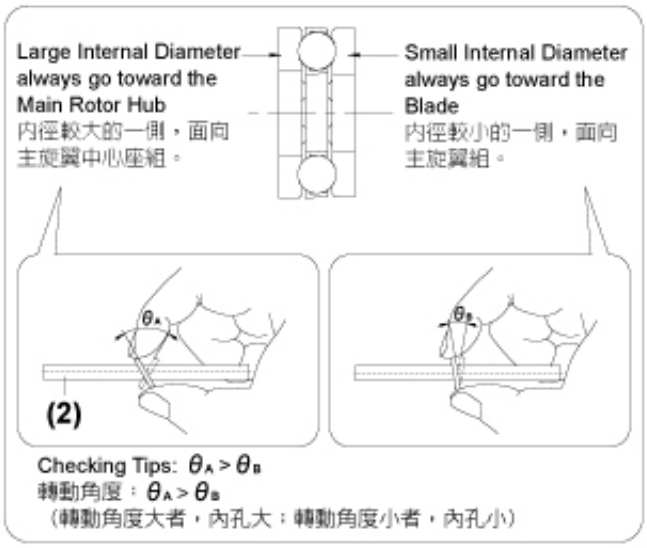

Completed View
組裝完成

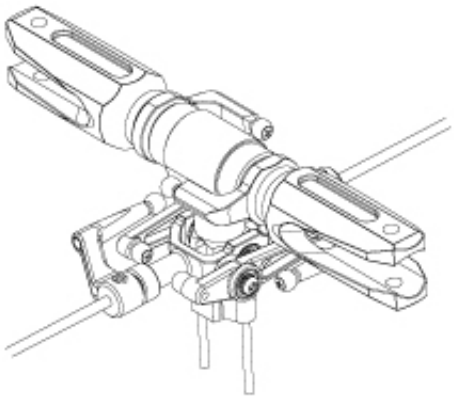

Main Rotor-5 / 主旋翼機構組裝-5

No.	Material No.	Description	名稱	Qty
1	BK1502	HARDENED MAIN SHAFT	高強度主軸	1
2	BK1086	SOCKET SCREW M2×14	內六角半牙螺絲M2×14	1
3	HML2	M2 NUT	M2螺帽	2

BK1086
SOCKET SCREW M2×14
內六角半牙螺絲M2×14

HML2
M2 NUT
M2螺帽

Step 1 / 步驟一

1. Insert the main rotor head set into the Main Shaft. Note the end with a hole of the Main Shaft has to insert into the Hub.
2. Line up the holes on the Main Shaft & Hub.
3. Insert the Socket Screw (M2 x 14, #2) through the Hub and apply a drop of threadlocking to screw it with the Nut.

1. 將主軸穿過組裝完成的主旋翼頭組。
2. 對正主軸及固定座上孔位。
3. 以半牙內六角螺絲穿過固定座及主軸後，套上螺帽並使用適量防鬆劑固定。

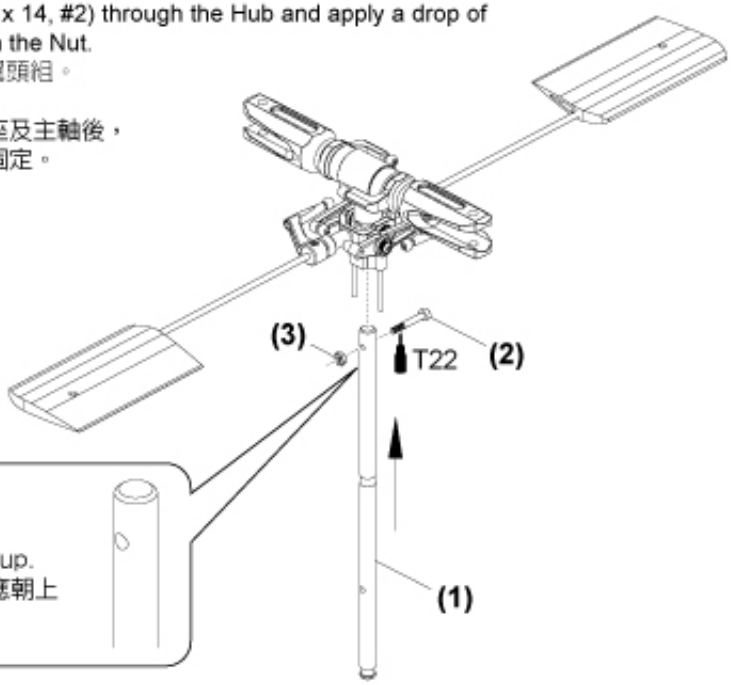

Note / 注意
The hole should point up.
請注意，有孔位的一端應朝上

Step 2 / 步驟二

Screw a second Nut with a drop of threadlocking to prevent the Socket Screw coming loose.
於固定螺帽外側再鎖上一顆螺帽，使用適量防鬆劑固定，防止鬆脫。

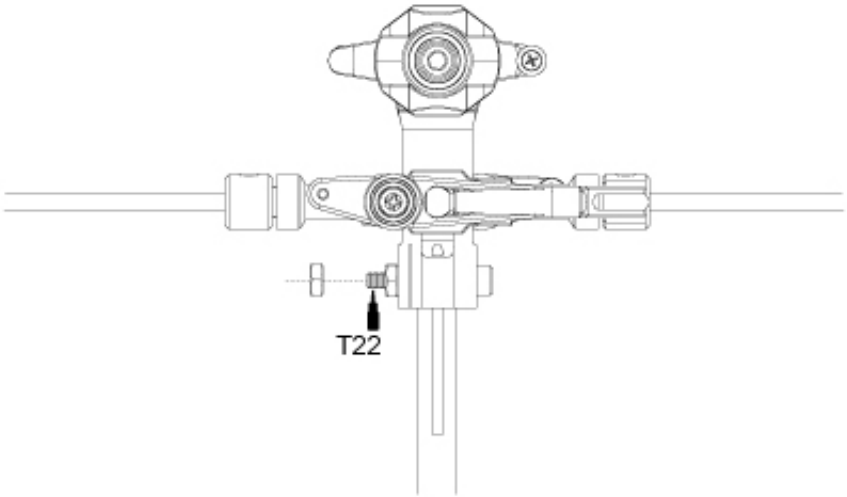

Main Rotor-6 / 主旋翼機構組裝-6

No.	Material No.	Description	名稱	Qty
1	BV1406	M. FLYBAR C. LEVER	金屬穩定翼控制臂組	2
2	BK1014	WASHOUT LINKAGE	連接座	2
3	HSP17-7N	COUNTERSUNK SCREW M1.7×7	圓頭十字螺絲M1.7×7	2
4	BK1480	COLLAR, d2×D3×5.6t	軸環 d2×D3×5.6t	2
5	HSP16-6N	COUNTERSUNK SCREW M1.6×6	圓頭十字螺絲 M1.6×6	2
6	BK1203	LINKAGE BALL(ø3.8)	連接頭 (ø3.8)	2

No.	Material No.	Description	名稱	Qty
7	BK1481	FLAT WASHER d2xD3.7x0.5t	墊片 d2xD3.7x0.5t	2
8	HNU2-9Z	SHOULDER SCREW M2x9	圓頭十字軸套螺絲 M2×9	2
9	BV1405	METAL WASHOUT BASE SET	金屬控制臂座組	1
10	BV1419A	METAL Swashplate	金屬十字盤	1
11	BK1020	MAIN SHAFT LOCK RING	止擋圈	1
12	HME3-3B	SET SCREW M3×3	無頭內六角螺絲 M3×3	1

HSP17-7N
Countersunk Screw M1.7×7
圓頭十字螺絲M1.7×7

HSP16-6N
Countersunk Screw M1.6×6
圓頭十字螺絲 M1.6×6

BK1480
COLLAR, d2×D3×5.6t
軸環 d2×D3×5.6t

BK1481
FLAT WASHER d2xD3.7x0.5t
墊片 d2xD3.7x0.5t

HNU2-9Z
SHOULDER SCREW M2x9
圓頭十字軸套螺絲 M2×9

HME3-3B
Set Screw M3×3
無頭內六角螺絲 M3×3

Step 1 / 步驟一

1. Secure the Washout Linkage to the Metal Flybar Control Lever and ensure the Washout Linkage runs effortlessly.
2. Secure the Linkage Balls to the Metal Flybar Control Lever. The inner hole on the lever is for novice, and the outer hole is for 3D flying.
3. Secure the Metal Flybar Control Lever to the Washout Base.
4. Make sure the Metal Flybar Control Lever runs effortlessly.

1. 將連接座固定於金屬穩定桿控制臂上，需確認轉動順暢。
2. 將球頭鎖入穩定桿控制臂，內孔適合初學者，外孔則適合3D特技飛行。
3. 將金屬穩定桿控制臂鎖上固定於控制臂座上。
4. 確認金屬穩定桿控制臂轉動順暢。

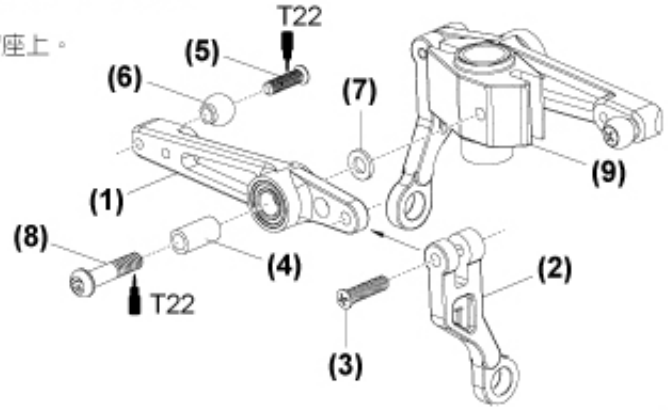

Step 2 / 步驟二

1. Slide the metal washout set into the Main Shaft, and ensure the pins of the Metal Main Rotor Hub go through the slots of the Metal Washout Base.
2. Slide the Metal Swashplate into the Main Shaft. Attach the Washout Linkage to the inner linkage balls of the Metal Swashplate.

1. 將控制臂組穿過主軸，並將主旋翼固定座插銷穿過控制臂中心座。
2. 將十字盤穿過主軸，將控制臂座組連桿與十字盤內盤連桿頭連接。

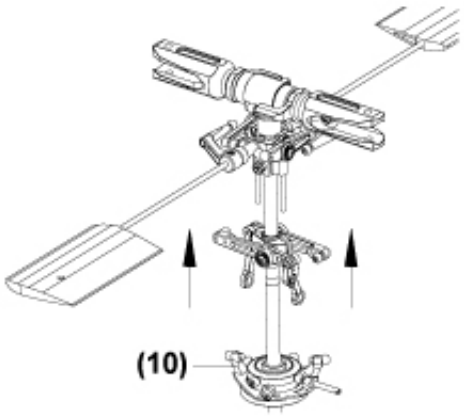

Step 3 / 步驟三

Slide the Main Shaft Lock Ring and fix by a Set Screw with a drop of threadlocking.
將主軸固定套環穿過主軸並用螺絲固定。

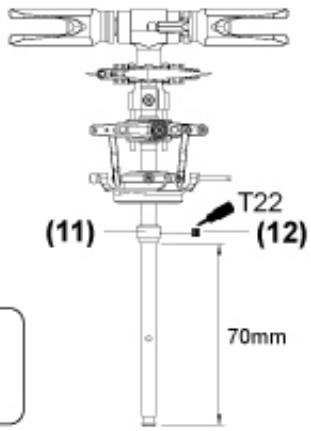

Note / 注意

The length from the end of the Min Shaft to the Lock Ring is 70mm.
固定套環安裝位置為距離主軸底部約70mm處（如圖示）。

Linkage Rod Installation / 連桿組裝

No.	Material No.	Description	名稱	Qty
1	BK0932	BALL LINK d3.8x10mm	單頭連接桿	4
2	BK1063	LINKAGE ROD D1.3x7mm	連接桿	3
3	BK0922	BALL LINK d3.8x12mm	單頭連接桿	14

No.	Material No.	Description	名稱	Qty
4	BK1064	LINKAGE ROD 1.3X10mm	連接桿	2
5	BK1066	LINKAGE ROD 1.3x24.5mm	連接桿	2
6	BK1065	LINKAGE ROD 1.3x29mm	連接桿	2

BK0922
Ball Link d3.8x12mm
單頭連接桿

BK0932
Ball Link d3.8x10mm
單頭連接桿

Step 1 / 步驟一

Assemble the Linkage Rods as drawings. The linkage length is measured by the center of the 2 Ball Links. These drawings are printed actual size; you can lay the linkage sets on the left drawings to measure the correct length.
請參考圖示組裝連桿及連桿頭。連桿長度距離的計算應以兩端連桿頭中心點為基準。圖示尺寸與實物相同，您可直接對照左方圖示以快速獲得正確長度。

Step 2 / 步驟二

Attach the linkage sets on the main rotor head set.
Please refer below drawing.
參考下圖正確連接連桿組及主旋翼組。

Scale=1:1
(unit:mm)

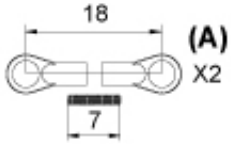

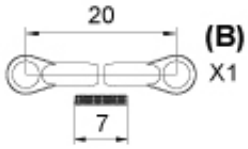

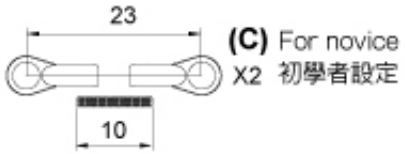

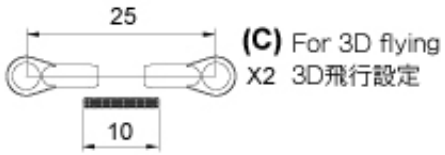

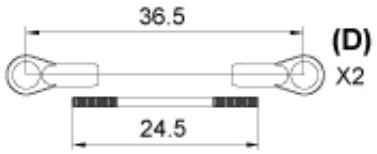

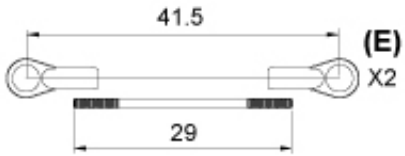

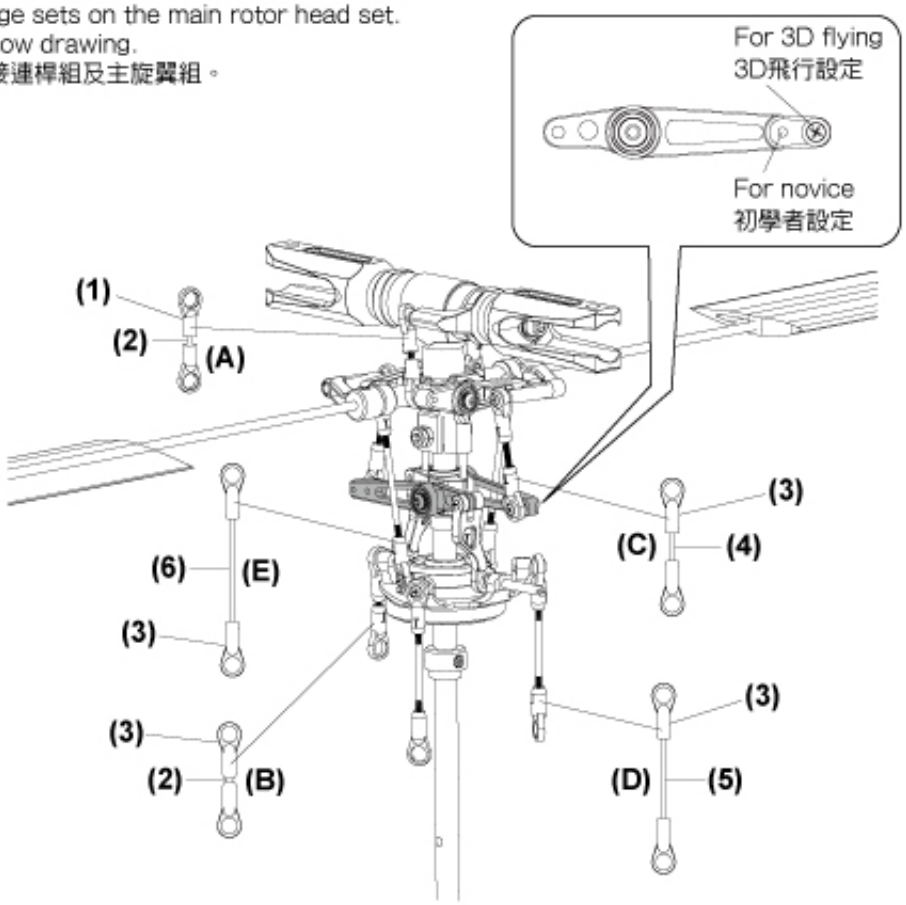

Note / 注意

T mark on the Ball Link goes toward outside.
球頭上T字凸起向外

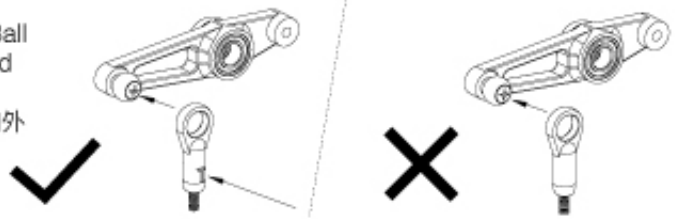

Main Frame Assembly-1 / 本體組裝-1

No.	Material No.	Description	名稱	Qty
1	BK1892	CARBON MAIN FRAME	碳纖側板	2
2	BV1882	UPPER BEARING SET	上軸承座組	1
3	BV1883	LOWER BEARING SET	下軸承座組	1
4	BK1878	FRONT SERVO TRAY	前伺服機座	2
5	BK1881	RARE SERVO TRAY	後伺服機座	1
6	HSA2-6	BUTTON HEAD SOCKET SCREW, M2X6	半圓頭內六角螺絲	16

No.	Material No.	Description	名稱	Qty
7	BV2609	TAIL BEARING FLANGE SET	尾傳動齒輪承座組	1
8	BV1412	METAL PULLEY SET (14T)	金屬皮帶輪組 (14T)	1
9	BK1445	TAIL GEAR 28T	金屬尾懸動齒 28T	1
10	HMY1-5	PIN ø1×5.3	插銷 ø1×5.3L	1
11	HMD2-6	FLAT HEAD PHILLIPS SCREW, M2X6	平頭十字螺絲 M2x6	1
12	HNX2-10B	Socket Button Head Self Tapping Screw M2×10	半圓頭內六角自攻螺絲M2×10	4

HSA2-6
Button Head Socket Screw, M2x6
半圓頭內六角螺絲

HMY1-5
Pin ø1×5.3
插銷ø1×5.3L

Step 1 / 步驟一

Assemble the left main frame as drawing. Secure the screws with a drop of threadlocking but not over tighten.
參考圖示組裝左側板。使用適量防鬆劑固定，但請勿過度鎖緊。

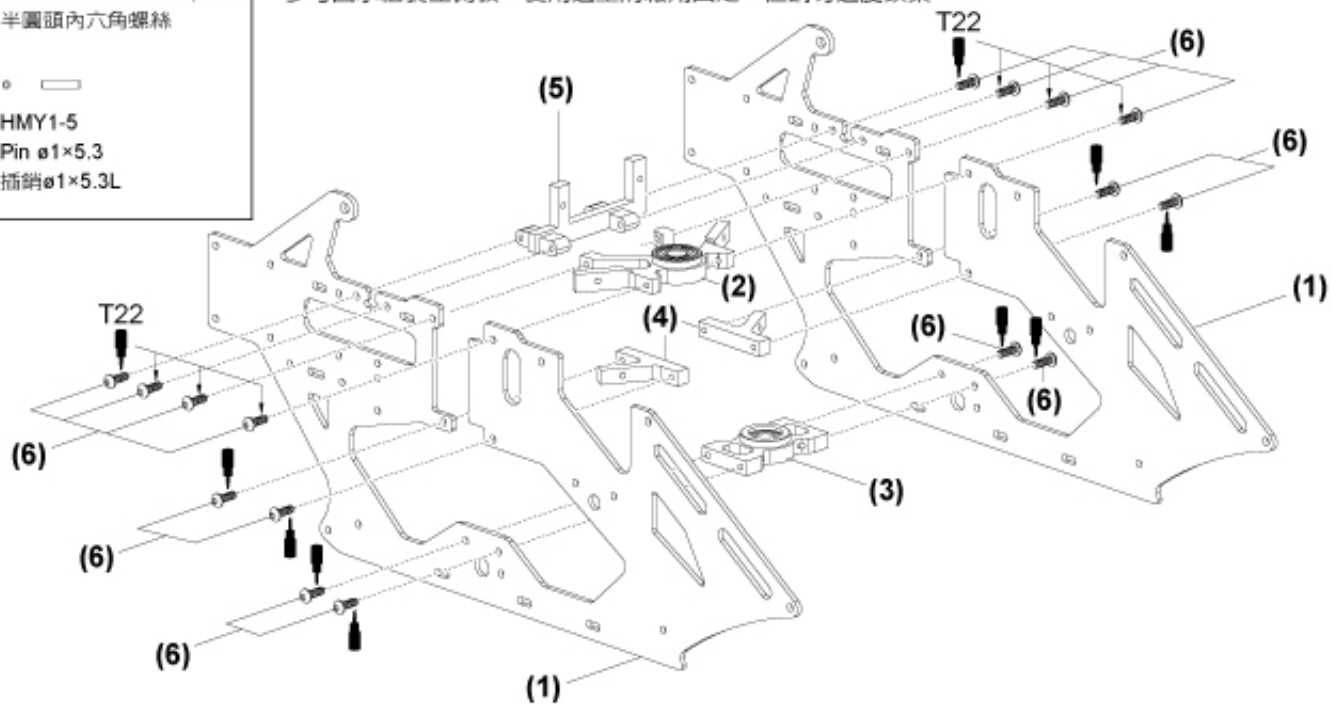

HMD2-6
Flat Head Phillips Screw, M2x6
平頭十字螺絲M2x6

HNX2-10B
Socket Button Head Self Tapping Screw M2×10
半圓頭內六角自攻螺絲M2×10

Step 2 / 步驟二

1. Assemble the tail drive gear set as drawing.
2. Secure the tail drive gear set to the main frame set.
1. 參考圖示組裝尾傳動齒輪組。
2. 將尾傳動齒輪組組裝至側板組上。

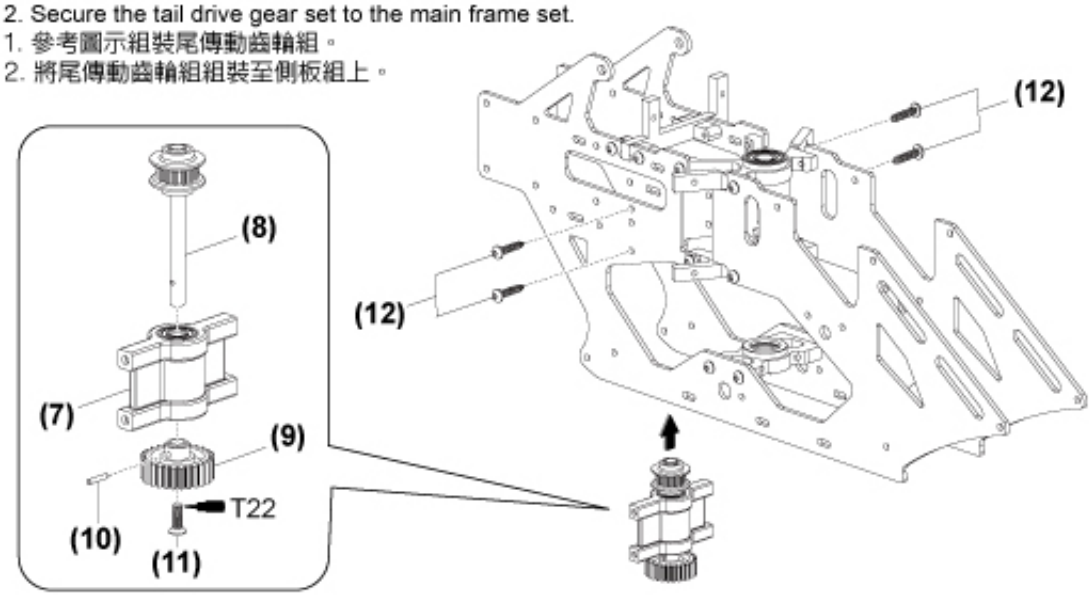

Main Frame Assembly-2 / 本體組裝-2

No.	Material No.	Description	名稱	Qty
1	BK2601	ANTI-ROTATION BRACKET	十字盤相位導軌	1
2	BK2604	BATTERY TRAY	電池板	1
3	BK2606	BOTTOM BRACKET	機身底板	1

No.	Material No.	Description	名稱	Qty
4	HNX2-6B	Socket Button Head Self Tapping Screw M2×6	半圓頭內六角自攻螺絲M2×6	12
5	BK1887	STANDOFF SPACER	定位柱	1
6	BK1888	CANOPY STANDOFF	機殼支柱	2

HNX2-6B
Socket Button Head Self Tapping Screw M2×6
半圓頭內六角自攻螺絲M2×6

Step 1 / 步驟一

1. Assemble the Battery Tray, Anti-rotation Bracket and Bottom Bracket by Tapping Screws (M2 x 6, #4) as drawing.
2. Assemble the Canopy Standoff & Standoff Spacer on the main frame set, secure tightly with a drop of thrardlocking.

1. 參考圖示將電池板、十字盤相位導軌及機身底板以自攻螺絲組裝至側板組。
2. 使用適量防鬆劑將將機殼支柱及定位柱組裝至側板組。

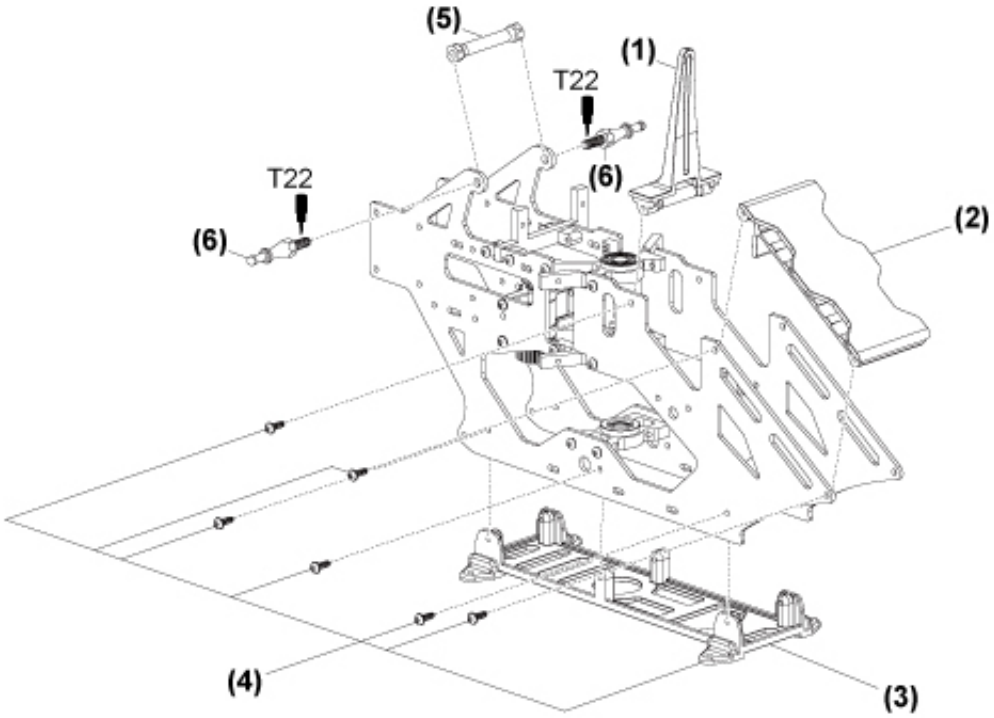

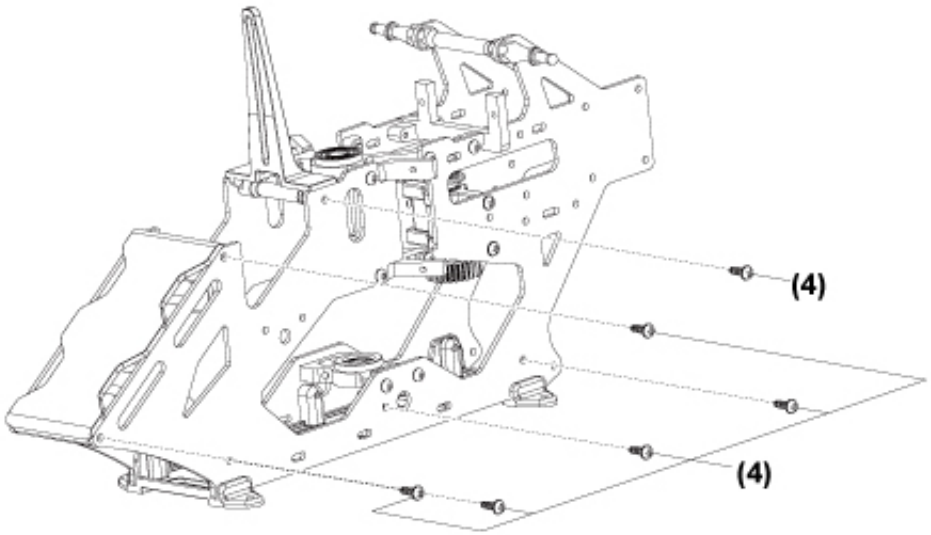

Main Frame Assembly-3 / 本體組裝-3

No.	Material No.	Description	名稱	Qty
1	BK0933	AUTOROTATION TAIL DRIVE GEAR	尾驅動輪(124T)	1
2	BV0934	MAIN GEAR (W/BEARING)	主齒輪(含軸承)	1
3	BK0931	FLAT WASHER D6×D10×0.3	單向軸套墊圈 d6×D10×0.3	1
4	BK0930	ONE WAY BEARING SHAFT	單向軸套	1

BK0931
Flat Washer d6×D10×0.3
單向軸套墊圈 d6×D10×0.3

1. The One Way Bearing and the Spacer are pre-assembled.
2. Assemble the Main Gear and the Autorotation Tail Drive Gear with the One Way Bearing Shaft.
1. 單向軸承與墊片原廠已安裝完成。
2. 以單向軸套組合主齒輪與尾驅動齒輪。

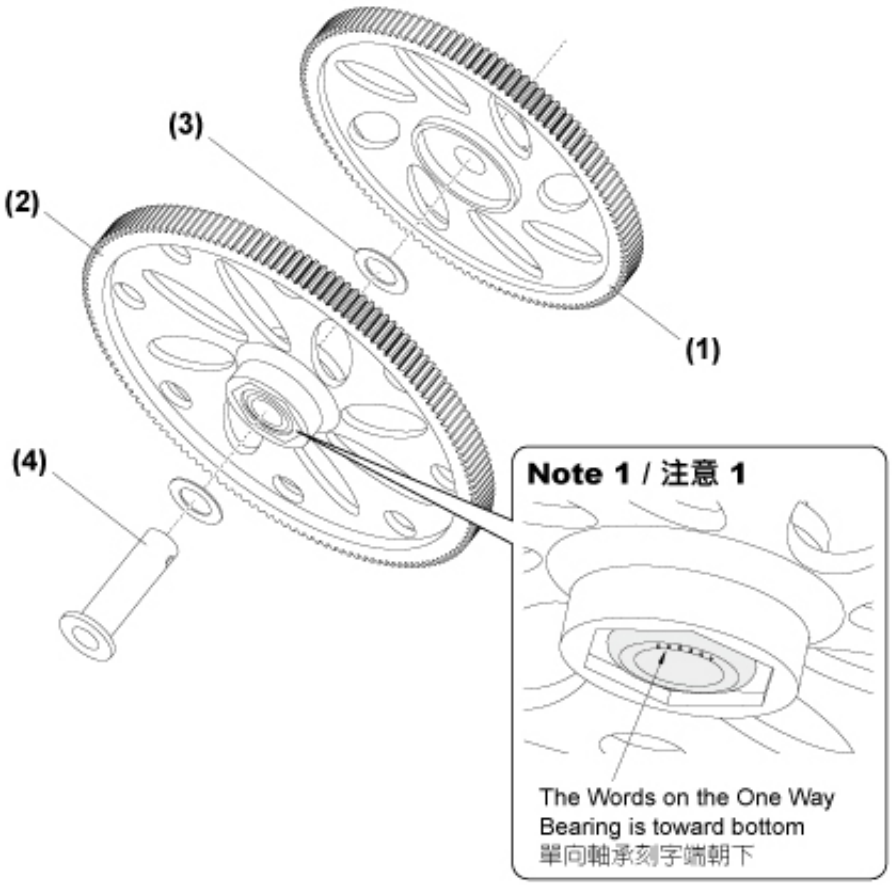

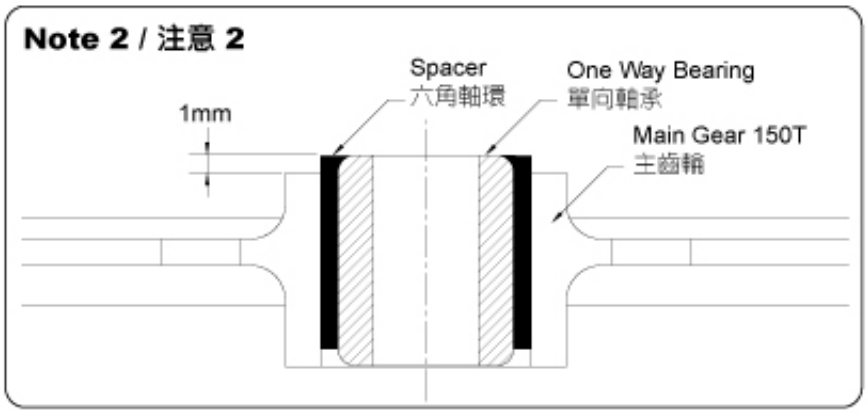

Main Frame Assembly-4 / 本體組裝-4

No.	Material No.	Description	名稱	Qty
1	BK2602	ANTENNA HOLDER	天線管座	1
2	BK2603	CANOPY CLIP	機殼固定夾	1
3	BK1473	LANDING SKID (BLACK)	腳架（黑）	1
4	HNX2-6B	Button Head Socket Screw, M2x6	半圓頭內六角自攻螺絲M2×6	8
5	BK1038	LANDING SKID DAMPER	腳架墊圈	4

No.	Material No.	Description	名稱	Qty
6	BK1020	MAIN SHAFT LOCK RING	止擋圈	1
7	HME3-3B	SET SCREW M3×3	無頭內六角螺絲M3×3	1
8	HMC2-14B	SOCKET SCREW M2×14	內六角螺絲M2×14	1
9	HML2	M2 NUT	M2螺帽	1

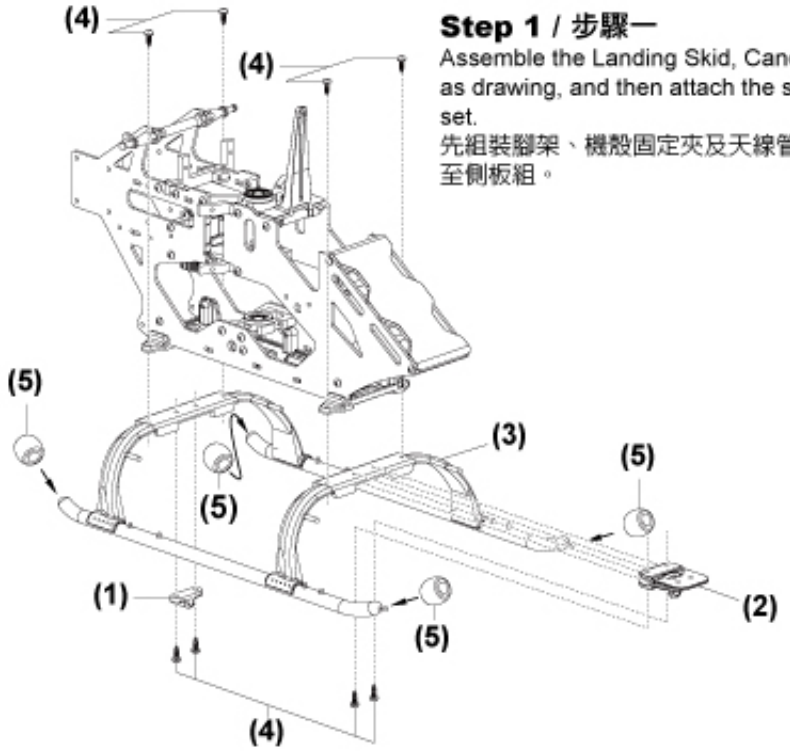

Step 1 / 步驟一

Assemble the Landing Skid, Canopy Clip & Antenna Holder as drawing, and then attach the skid set on the main frame set.

先組裝腳架、機殼固定夾及天線管座，然後再將腳架組安裝至側板組。

Step 2 / 步驟二

1. Slide the main gear set into the main frame set.
2. Insert the Main Shaft into the Upper Bearing Housing, main gear set & Lower Bearing Housing.
3. Line up the holes of the Autorotation Tail Drive Gear, One Way Bearing Shaft & Main Shaft, and then insert the Socket Screw to fix them with a M2 Nut. Add a drop of threadlocking when securing, but do not over tighten.
4. Attach the Main Shaft Lock Ring on the end of the Main Shaft. Secure the ring by a Set Screw with a drop of threadlocking, note there should be no play of the Main Shaft.

1. 將主齒輪組套入側板組中。
2. 將主軸穿過上軸承座、主齒輪組及下軸承座。
3. 對正尾驅動主齒、單向承軸及主軸上孔位後，穿入內六角螺絲並加上螺帽，並使用適量防鬆劑固定。注意! 請勿過度緊迫螺絲!
4. 將止擋環套入主軸尾端，使用適量防鬆膠鎖上，正確安裝時，主軸不會有上下移動之空間。

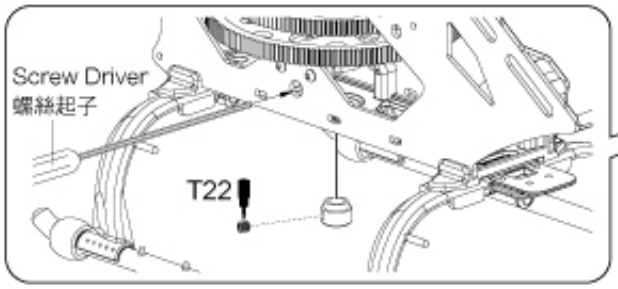

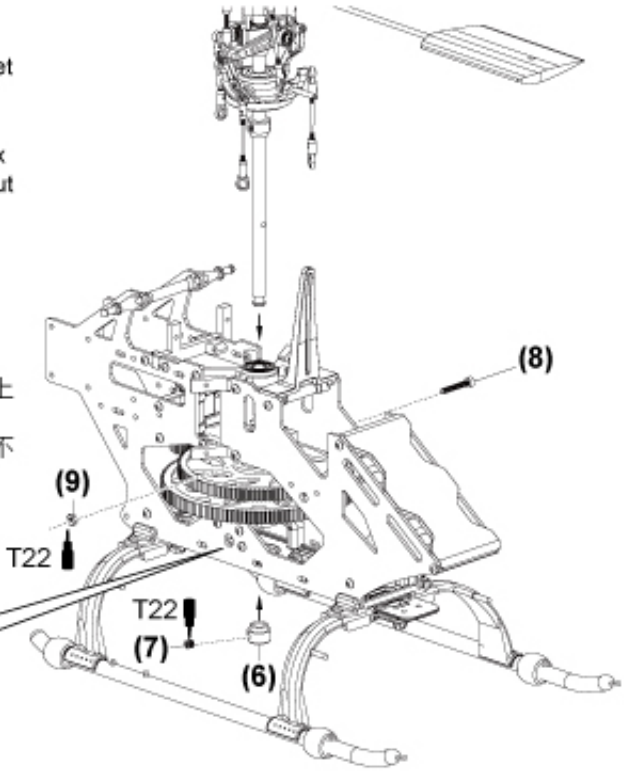

Tail Unit Assembly-1 / 尾管組裝-1

No.	Material No.	Description	名稱	Qty
1	BK1073	BELT MXL-3T（413T）	皮帶MXL-3t（413T）	1
2	BK1004-1	TAIL BOOM 356MMXØ14	尾管 356mmxø14	1
3	BK1872	METAL TAIL UNIT	金屬尾座	1
4	BV1873	METAL TAIL SIDE COVER- R	金屬尾座側蓋組-右	1
5	BV1874	METAL TAIL SIDE COVER- L	金屬尾座側蓋組-左	1

No.	Material No.	Description	名稱	Qty
6	BK1875	TAIL UNIT SPACER	尾座支柱	1
7	BV0973A	MATEL TAIL ROTOR SHAFT SET	尾旋翼軸組	1
8	HMD2-5B	FLAT HEAD PHILLIPS SCREW, M2X5	平頭十字螺絲 M2x5	6
9	HSA2-6	BUTTON HEAD SOCKET SCREW, M2X6	半圓頭內六角螺絲 M2x6	1

HMD2-5B
Flat Head Phillips Screw, M2x5
平頭十字螺絲 M2x5

HSA2-6
Button Head Socket Screw, M2x6
半圓頭內六角螺絲 M2x6

Step 1 / 步驟一

Insert the Belt into the Tail Boom. First tape the belt & insert the end of the belt as shown, and not twist the belt.
將皮帶穿過尾管。用膠帶將皮帶尾端貼合可使皮帶較容易穿過尾管；並請勿扭轉皮帶。

Note / 注意
The slot is toward upper side.
尾管上缺口朝上

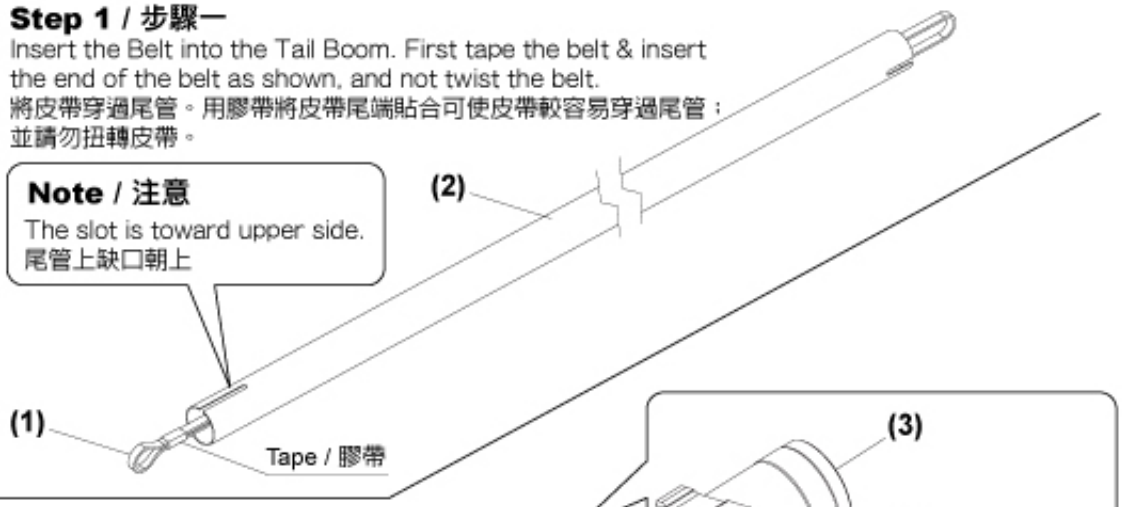

Step 2 / 步驟二

1. Attach the Metal Tail Side Cover- R to Metal Tail Unit as drawing.
2. Slide the Metal Tail Unit onto the Tail Boom.
1. 參考圖示將金屬尾座側蓋（右）安裝至金屬尾座上。
2. 將金屬尾座套入尾管。

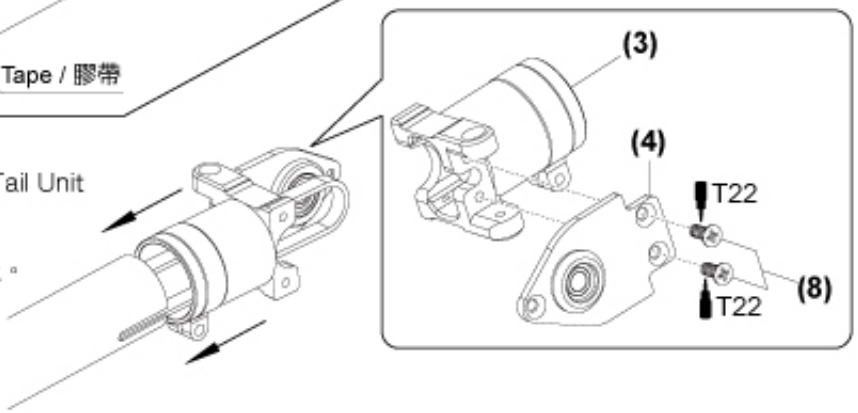

Step 3 / 步驟三

1. Assemble the Tail Unit as drawing, as well as warp the belt around the Tail Pulley.
2. Secure the Tail Unit to the Tail Boom tightly with a drop of Locitite.
1. 依圖示完成尾部組裝，同時將皮帶繞過皮帶輪。
2. 使用適量防鬆膠將尾部鎖緊在尾管上。

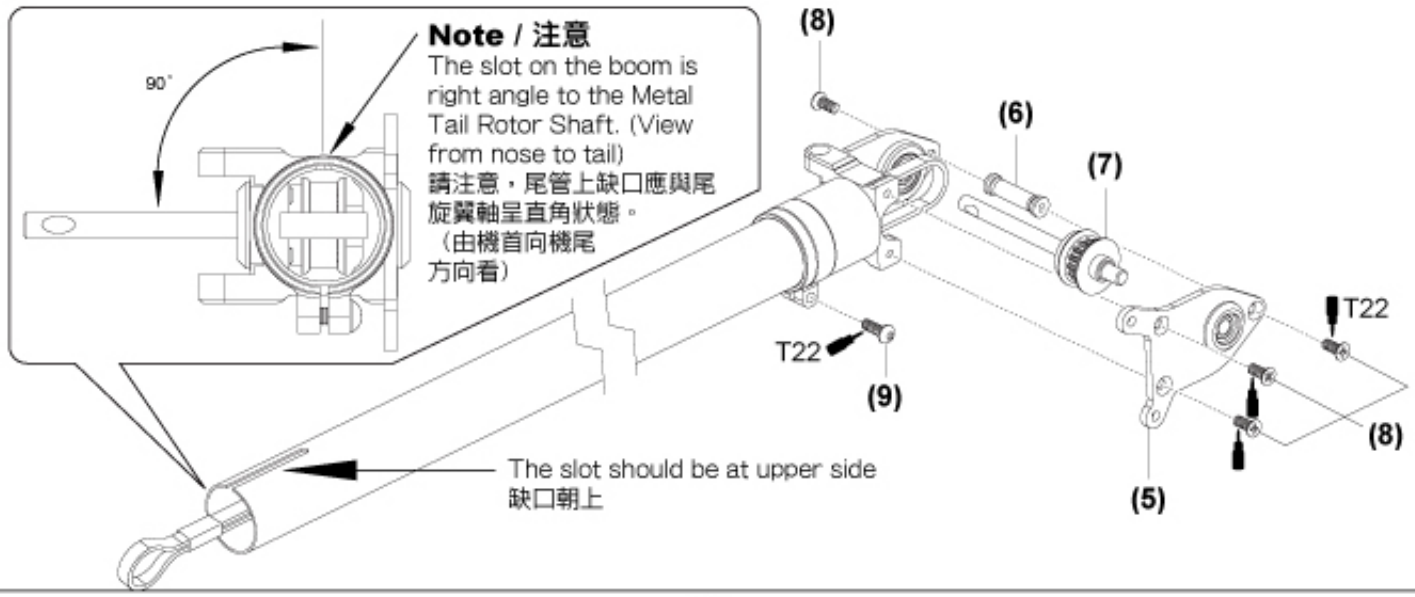

Tail Unit Assembly-2 / 尾管組裝-2

No.	Material No.	Description	名稱	Qty
1	BV1422	METAL TAIL PITH CONTROL LEVER-1	金屬尾旋翼控制桿-1	1
2	BV1423	METAL TAIL PITH CONTROL LEVER-2	金屬尾旋翼控制桿-2	1
3	BK1203	LINKAGE BALL(ø3.8)	連接頭 (ø3.8)	1
4	HSP16-6N	COUNTERSUNK SCREW M1.6×6	圓頭十字螺絲 M1.6×6	1
5	BK1481	FLAT WASHER d2xD3.7x0.5t	墊片 d2xD3.7x0.5t	3

No.	Material No.	Description	名稱	Qty
6	HMF2-6N	COUNTERSUNK SCREW M2×6	圓頭十字螺絲 M2×6	1
7	BV1421A	M. TAIL PITH CONTROL SET	金屬尾旋翼改角控制組	1
8	BK1091	DOUBLE JOINT LEVER	雙關連接桿	1
9	HMC2-16B	SOCKET SCREW M2×16	內六角螺絲 M2×16	2

BK1203
LINKAGE BALL(ø3.8)
連接頭 (ø3.8)

HSP16-6N
COUNTERSUNK SCREW M1.6×6
圓頭十字螺絲 M1.6×6

BK1481
FLAT WASHER d2xD3.7x0.5t
墊片 d2xD3.7x0.5t

HMF2-6N
Countersunk Screw M2×6
圓頭十字螺絲 M2×6

HMC2-16B
Socket Screw M2×16
內六角螺絲 M2×16

Step 1 / 步驟一

1. Secure the Double Joint Lever to Tail Unit as drawing.
2. Do not over tighten the Socket Screw, ensure the lever rotate effortlessly.
1. 將雙關節連接桿安裝至尾管座。
2. 固定螺絲請勿過度鎖緊，確認機構能靈活作動。

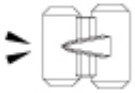

Note the orientation of the triangle mark on the Double Joint Lever.
請注意雙關連接桿上三角形凸標的方向。

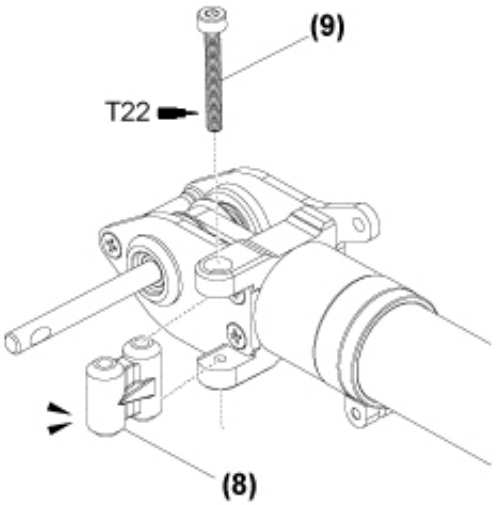

Step 2 / 步驟二

1. Secure the Linkage Ball to the Tail Pitch Control Lever-1.
2. Assemble the Tail Pitch Control Lever and the Tail Pitch Control Set as drawing.
1. 將球頭固定於金屬尾旋翼控制臂上。
2. 如圖示，組裝金屬尾旋翼控制臂組。

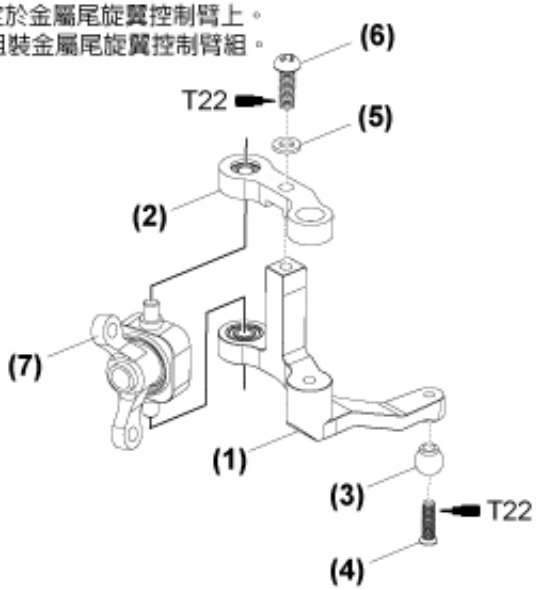

Step 3 / 步驟三

Do not over tighten the Socket Screw, ensure the lever runs effortlessly.
請勿過度鎖緊固定螺絲，確認機構作動順暢。

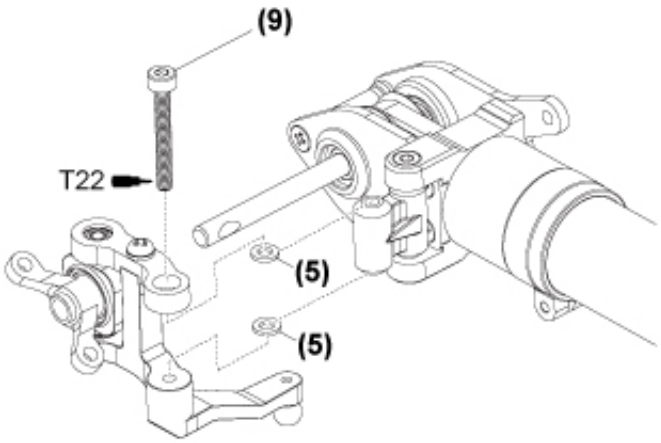

Tail Unit Assembly-3 / 尾管組裝-3

No.	Material No.	Description	名稱	Qty
1	BV1411	METAL TAIL PITCH HOUSING	金屬尾旋翼轉座組	2
2	BK1425	METAL TAIL PITCH LINK	金屬尾旋翼連接頭	2
3	HNU2-9Z	SHOULDERED SCREW M2×9	圓頭十字軸套螺絲 M2×9	4
4	BK0972	TAIL ROTOR HUB	尾旋翼固定座	1

No.	Material No.	Description	名稱	Qty
5	HMV520ZZWY	BEARING D2×D5×2.5	滾珠軸承 d2×D5×2.5	2
6	BK1080	SAFTY WASHER	墊圈	2
7	HMC2-8B	SOCKET SCREW M2×8	內六角螺絲 M2×8	2
8	BK0961	TAIL ROTOR BLADE	尾旋翼	2

HNU2-9Z
SHOULDERED SCREW M2×9
圓頭十字軸套螺絲 M2×9

HMV520ZZWY
BEARING D2×D5×2.5
滾珠軸承 d2×D5×2.5

BK1080
SAFTY WASHER
墊圈

HMC2-8B
SOCKET SCREW M2×8
內六角螺絲 M2×8

Step 1 / 步驟一

1. Secure the Metal Tail Pitch Control Link to the Metal Tail Pitch Housing but do not over tighten. Note the orientation of the Chamfer on the link.
2. Attach the Metal Tail Pitch Housing into the Tail Rotor Hub by the Socket Screws with a drop of threadlocking. Note the orientation of the Safety Washer.

1. 如圖示，組裝金屬尾舵控制臂、夾片組，需注意連接座安裝方向性，請勿過度鎖緊固定螺絲，確認機構可以靈活作動。
2. 組合金屬尾舵控制臂與金屬夾片組，需使用防鬆膠，並注意墊片的安裝方向。

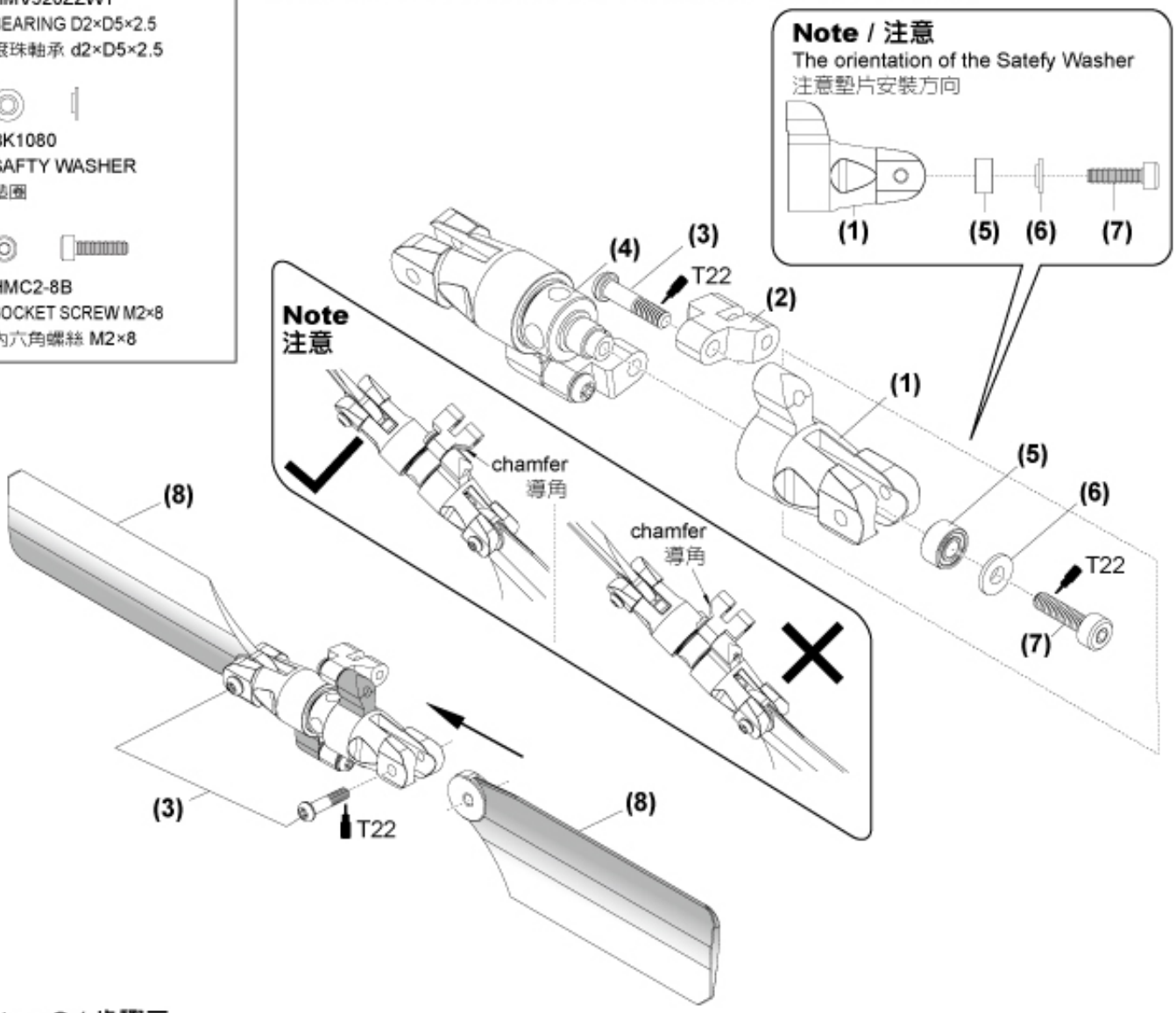

Step 2 / 步驟二

1. Attach the Tail Rotor Blades to the Metal Tail Pitch Housing as drawing. Ensure the leading edges of the blades are toward proper side as shown.
2. Secure with a drop of threadlocking but do not over tighten the screws.

1. 參考圖示將尾旋翼安裝於金屬尾旋翼夾座。請確認旋翼前樑朝向正確方向(如圖示)。
2. 使用適量防鬆劑固定螺絲，但請勿過度鎖緊。

Tail Unit Assembly-4 / 尾管組裝-4

No.	Material No.	Description	名稱	Qty
1	HME3-3B	SET SCREW M3×3	無頭內六角螺絲 M3×3	1
2	HNU2-9Z	SHOULDERED SCREW M2×9	圓頭十字軸套螺絲 M2×9	2

No.	Material No.	Description	名稱	Qty
1	BK1501	3D CARBON TAIL FIN	3D碳纖維垂直安定面	1
2	HSA2-6	BUTTON HEAD SOCKET SCREW, M2X6	半圓頭內六角螺絲	2
3	HMM2Z	LUCK NUT, M2	止鬆螺帽	2

HME3-3B
SET SCREW M3×3
無頭內六角螺絲 M3×3

HNU2-9Z
SHOULDERED SCREW M2×9
圓頭十字軸套螺絲 M2×9

Step 1 / 步驟一

1. Slide the tail rotor set into the Tail Rotor Shaft. Line the hole up with the concave on the shaft.
2. Secure the tail rotor set tightly by the Set Screw with a drop of threadlocking.

1. 將組裝完成的尾舵控制臂與夾片組安裝至尾橫軸。
2. 無頭內六角螺絲需準確安裝於尾橫軸固定孔位，並使用防鬆膠。

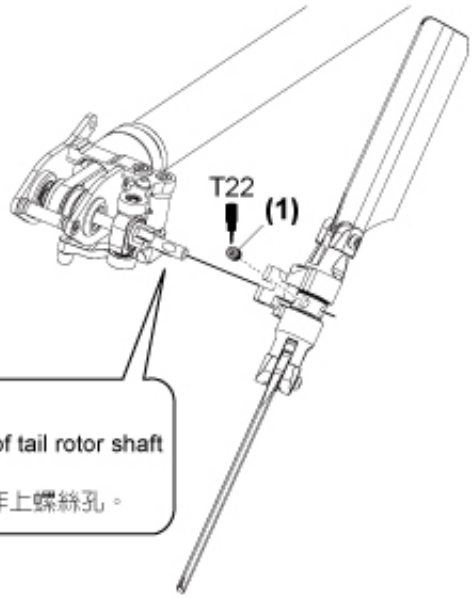

Note / 注意
Line up the concave of tail rotor shaft and the hole of hub.
尾橫軸上凹槽對正轉作上螺絲孔。

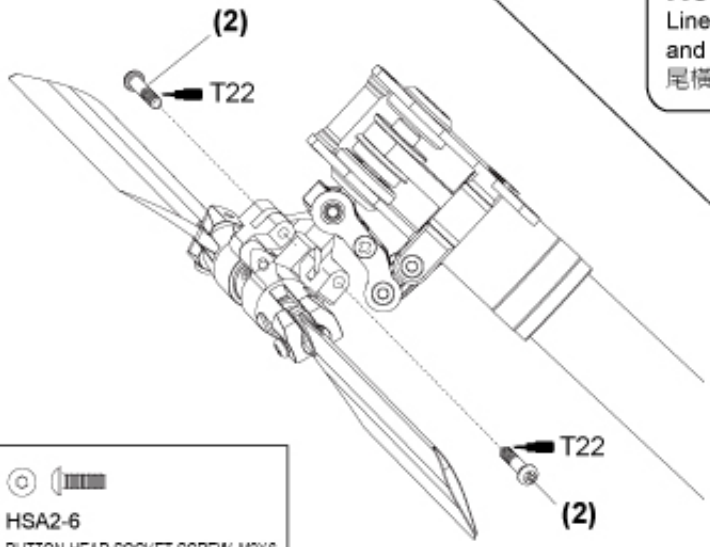

Step 2 / 步驟二

Fit the Tail Pitch Control Links to the Tail Pitch Control Set. Do not over tighten the Socket Screw and ensure the tail linkages run effortlessly.
將控制連桿與控制臂連接，請使用適量螺絲防鬆劑，勿過度鎖緊固定螺絲，並確認機構可以靈活作動。

HSA2-6
BUTTON HEAD SOCKET SCREW, M2X6
半圓頭內六角螺絲

HMM2Z
LUCK NUT, M2
止鬆螺帽

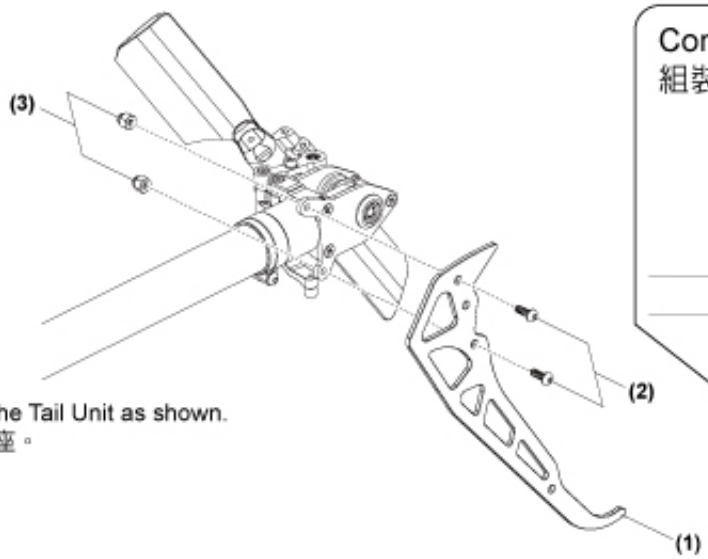

Completed View
組裝完成

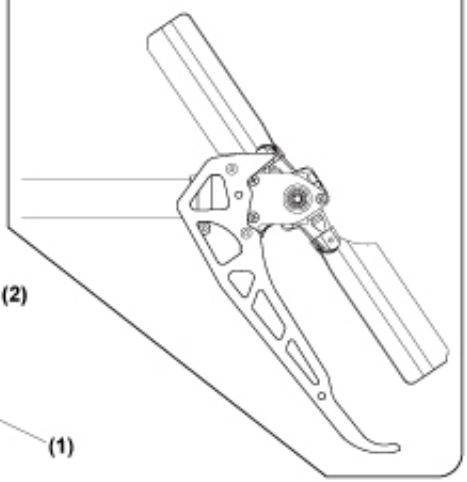

Step 3 / 步驟三

Attach the Carbon Tail Fin to the Tail Unit as shown.
將碳纖垂直安定翼固定於尾管座。

Tail Boom Bracket Set-1 / 尾管固定座組裝-1

No.	Material No.	Description	名稱	Qty
1	BK1082	ROD GUIDE	固定環	2
2	HMJ12-6B	TAPPING SCREW M1.2×6	圓頭十字自攻螺絲 M1.2×6	2
3	BK0923	TAIL SERVO TRAY	尾伺服機座	2

No.	Material No.	Description	名稱	Qty
4	HNN2-10B	TAPPING SCREW(W/WASHER) M2×10	圓頭墊圈自攻螺絲 M2×10	2
5	BK2610	TAIL BOOM BRACKET	尾管固定座	1
6	BK1886	BRACKET SPACER	固定座支柱	2

HMJ12-6B
TAPPING SCREW M1.2×6
圓頭十字自攻螺絲 M1.2×6

HNN2-10B
TAPPING SCREW(W/WASHER) M2×10
圓頭墊圈自攻螺絲 M2×10

1. Slide the Rod Guides and the Tail Servo Tray onto the Tail Boom.
2. Secure the Self-tapping Screws but do not tighten at this step, the position of these guides & servo tray may be adjusted later.
3. Insert the Bracket Spacers into the Tail Boom Bracket.

1. 將固定環與尾伺服機座跨入尾管。
2. 使用自攻螺絲稍事固定，以便後續調整。
3. 將固定座支柱穿入尾管固定座中。

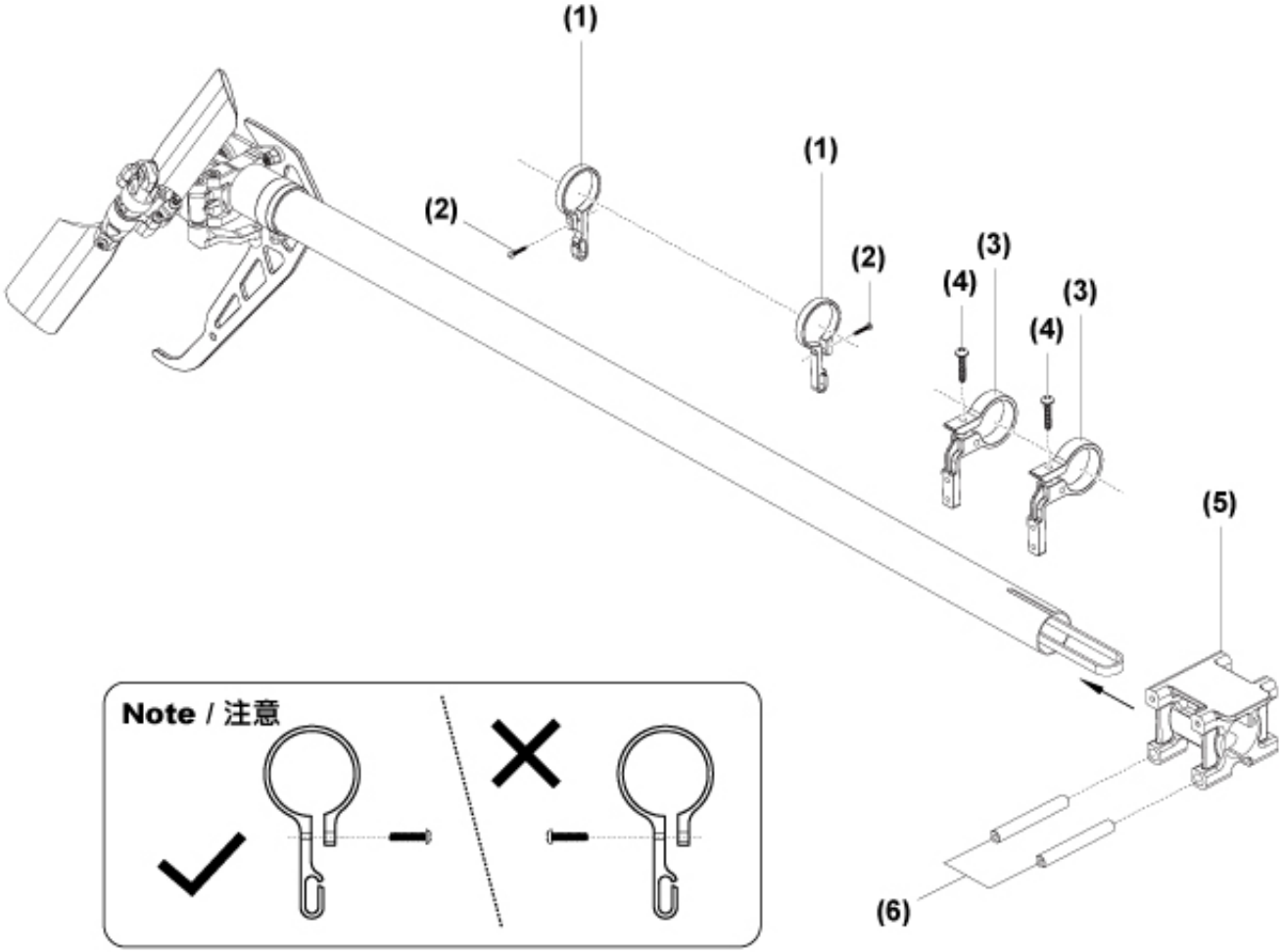

Tail Boom Bracket Set-2 / 尾管固定座組裝-2

No.	Material No.	Description	名稱	Qty
1	HNN2-10B	Socket Button Head Self Tapping Screw M2×10	半圓頭內六角自攻螺絲M2×10	4
2	HSA2-6	BUTTON HEAD SOCKET SCREW, M2X6	半圓頭內六角螺絲 M2X6	4

HNN2-10B
TAPPING SCREW(W/WASHER) M2×10
圓頭墊圈自攻螺絲 M2×10

HSA2-6
BUTTON HEAD SOCKET SCREW, M2X6
半圓頭內六角螺絲 M2X6

Step 1 / 步驟一

1. Remove the tap from the end of the belt. Insert the tail unit into the main frame set, twist the belt toward right for 90° and then warp around the pulley.
2. First tighten the 4 upper Tapping Screws（HNN2-10B,#1）to attach the Tail Bracket on the main frame set.
1. 移除皮帶末端膠帶。將尾部套入主側板組中，同時將皮帶向右扭轉90度後，繞過皮帶輪。
2. 先緊鎖上方的兩側4顆螺絲，將尾管固定座固定在主側板組上。

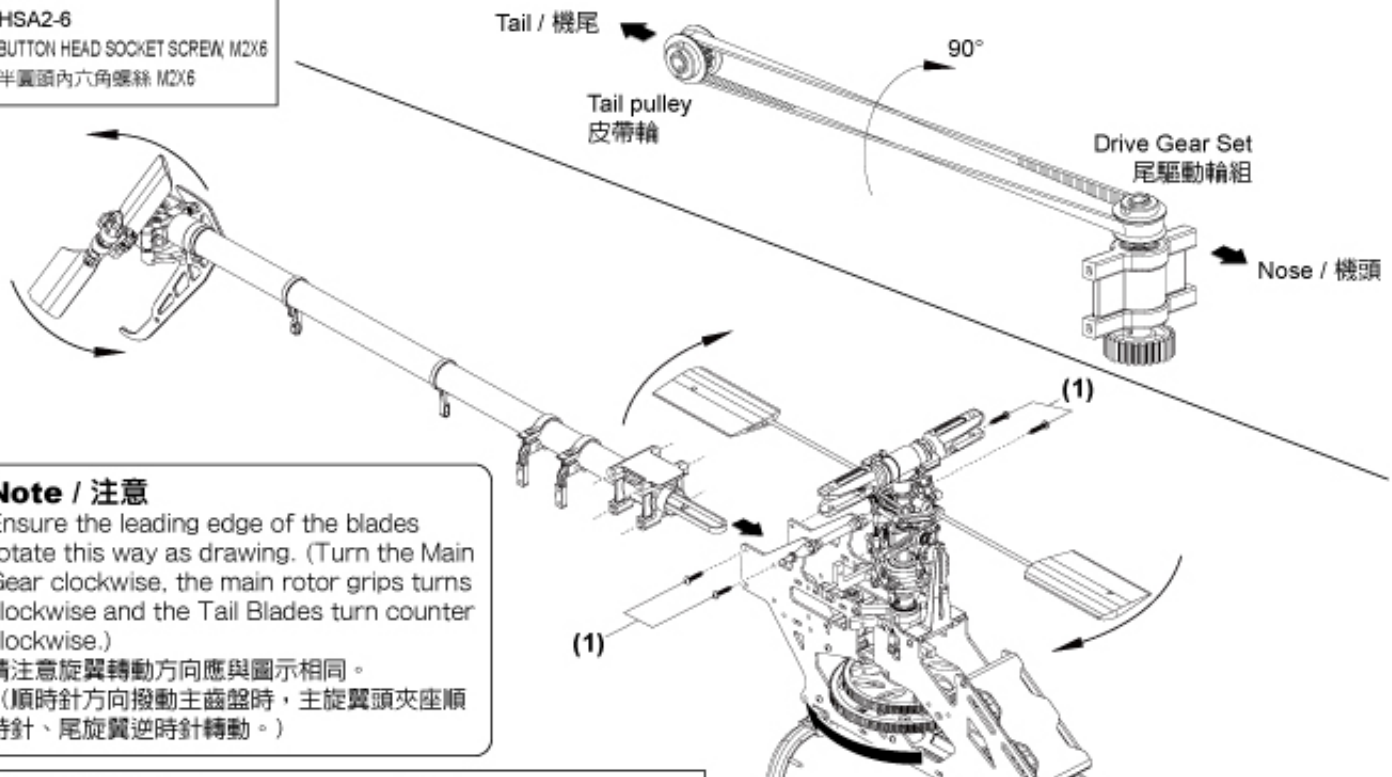

Note / 注意

Ensure the leading edge of the blades rotate this way as drawing. (Turn the Main Gear clockwise, the main rotor grips turns clockwise and the Tail Blades turn counter clockwise.)
請注意旋翼轉動方向應與圖示相同。
（順時針方向撥動主齒盤時，主旋翼頭夾座順時針、尾旋翼逆時針轉動。）

Step 2 / 步驟二

1. Pull the Tail Boom out slightly by grasping the Tail Unit with one hand and the main frame set with the other. Adjust until the belt deflects by about 0.2mm (0.08”).
2. Tighten the 4 lower Tapping Screws（HNN2-10B,#1）to fix the Tail Bracket on the main frame set.
1. 一手固定主側板組，另一手握住尾部將尾管向外拉，使皮帶拉緊。適當的皮帶緊度應於推壓皮帶時陷下少於0.2mm(0.08”)。
2. 將下方的兩側4 顆螺絲螺緊，將尾管固定座固定於主側板組。

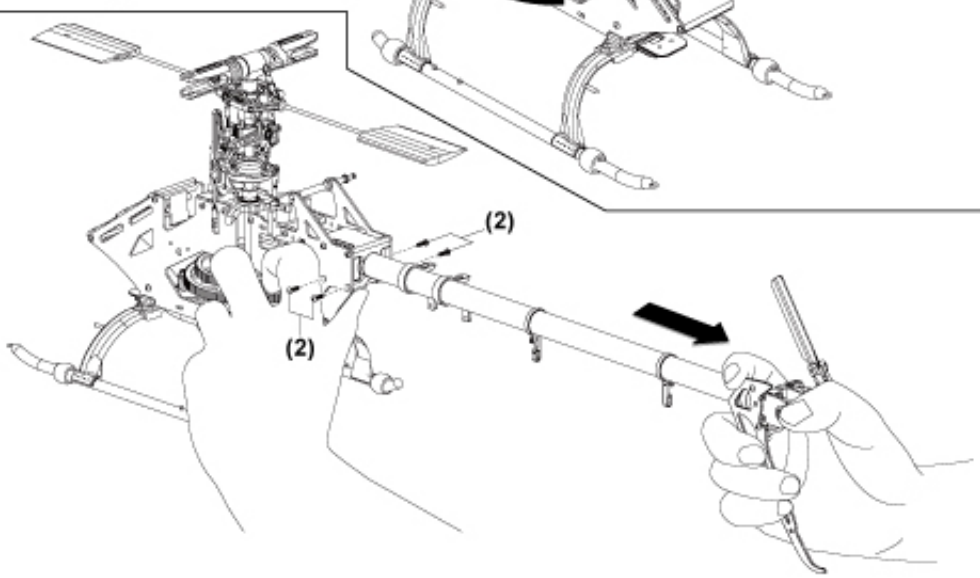

Electric System-1 / 電子系統-1

No.	Material No.	Description	名稱	Qty
1	BK1890	MOTOR MOUNT	馬達座	1
2	HSA3-5B	SOCKET SCREW M3×5	半圓頭內六角螺絲 M3×5	2
3	HME3-3B	SET SCREW M3×3	無頭內六角螺絲 M3×3	1

No.	Material No.	Description	名稱	Qty
4	BK1009	DRIVE GEAR 13T	驅動齒輪 13T	1
5	HSA2-6	BUTTON HEAD SOCKET SCREW M2X6	半圓頭內六角螺絲 M2x6	4

HSA3-5B
SOCKET SCREW M3×5
半圓頭內六角螺絲 M3×5

HME3-3B
SET SCREW M3×3
無頭內六角螺絲 M3×3

HSA2-6
BUTTON HEAD SOCKET SCREW M2X6
半圓頭內六角螺絲 M2x6

Note 1 / 注意 1

1. The length from the end of Drive Gear to Motor Mount is 16mm.
2. Please select the Drive Gear based on your motor & battery. The OBL 29/37-10H (No. 2382) Brushless Motor and 13T pinion are recommended for mini Titan V2 with ACE Power 3S1P Li-Po battery.

1. 驅動齒輪末端至馬達座距離為16mm。
2. 請依馬達及電池種類搭配驅動齒輪。使用ACE RC OBL 29/37-10H無刷馬達，建議搭配13T驅動齒輪及3S1P鋰聚電池組。

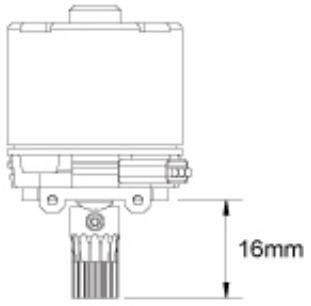

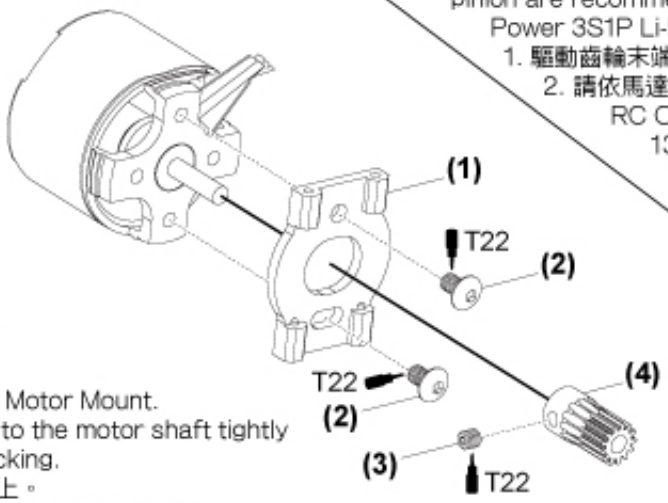

Step 1 / 步驟一

1. Mount the motor to the Motor Mount.
2. Secure the Drive Gear to the motor shaft tightly with a drop of threadlocking.

1. 將馬達固定於馬達固定片上。
2. 使用適量防鬆劑將驅動齒論固定於馬達主軸上。

Note 2 / 注意 2

You can observe the gear mesh from the bottom of Bottom Bracket.
您可從機體底部檢視齒輪間隙。

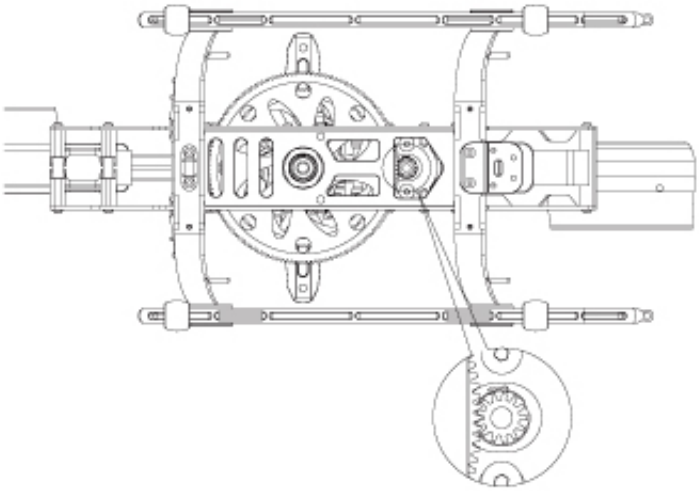

Step 2 / 步驟二

1. Install the Motor Mount into the main frame.
2. Adjust the mesh between the Main Gear and Drive Gear until there is a small amount of backlash all the way.

1. 將組裝好的馬達座固定於機身。
2. 調整好齒輪間隙之後，確實固定馬達座。

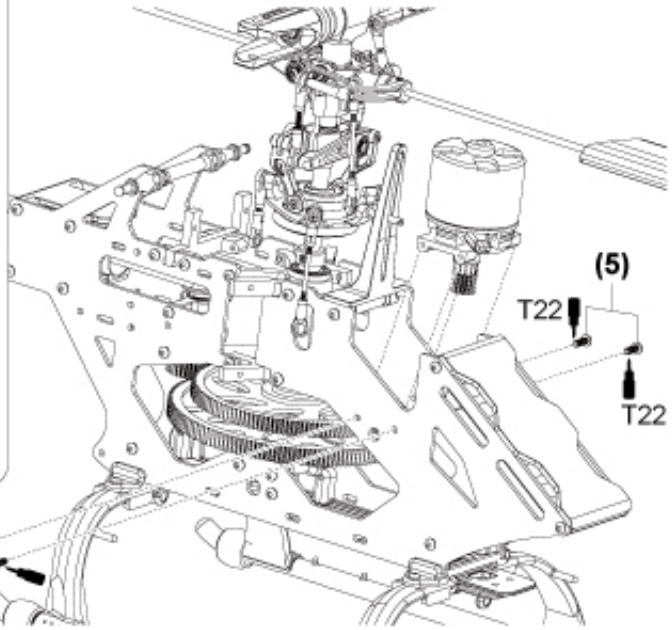

Electric System-2 / 電子系統-2

No.	Material No.	Description	名稱	Qty
1	HMC2-8B	SOCKET SCREW M2×8	內六角螺絲 M2×8	6

HMC2-8B
Socket Screw M2×8
內六角螺絲 M2×8

Step 1 / 步驟一

1. Remove the servo wheel prior to attaching the Linkage Ball.
2. Mount the Linkage Ball at 12.5mm from the center of the servo arm.
3. Secure the servo to the right Servo Tray and attach the rod to the servo arm.
1. 從伺服機上將伺服機擺臂拆下，安裝連桿頭。
2. 將連桿頭安裝於距離擺臂中心位置12.5mm處。
3. 將完成連桿頭安裝伺服機安裝於伺服機固定座右側，並與連桿連接。（左右側伺服機擺臂連桿頭朝內）

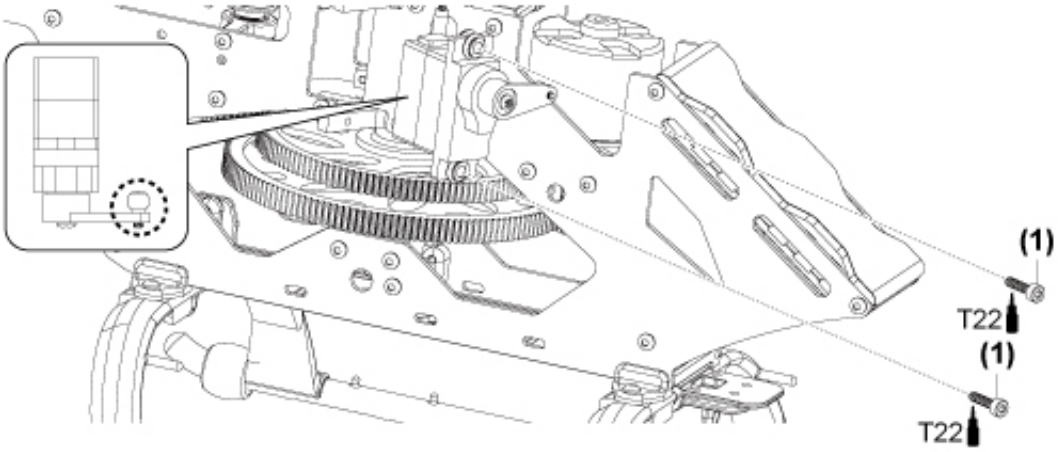

Step 2 / 步驟二

1. Remove all the servo wheels prior to attaching the Linkage Balls.
2. Mount the Linkage Balls at 12.5mm from the center of the servo arms.
3. Secure the servos to the left and to the back, attach the rods to the servo arms.
1. 從伺服機上將另外兩組伺服機擺臂拆下，安裝連桿頭。
2. 將連桿頭安裝於距離擺臂中心位置12.5mm處。
3. 將完成連桿頭安裝伺服機安裝於伺服機固定座左側與後側，並與連桿連接。（後側伺服機擺臂連桿頭朝外）

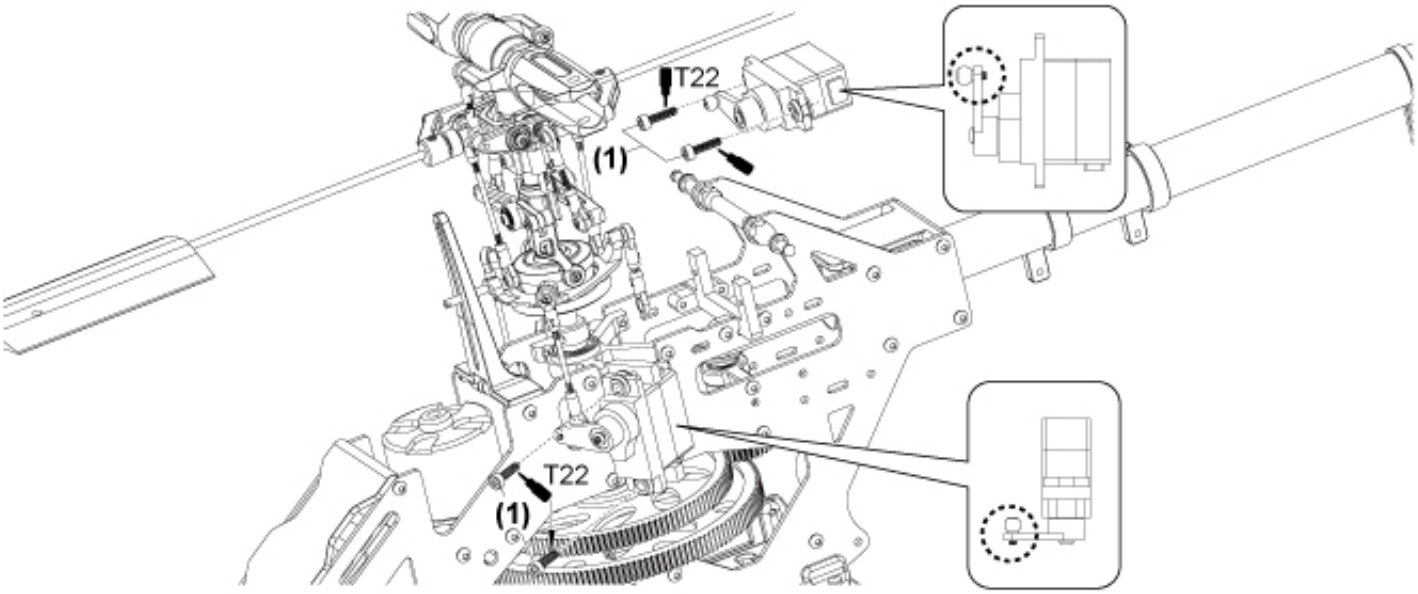

Electric System-3 / 電子系統-3

No.	Material No.	Description	名稱	Qty
1	BK1026	BRACKET	尾支撐桿座	1
2	BK1027	ROD ø3×255mm	碳纖棒 ø3×255mm	2
3	BK1025	TAIL SUPPORT ROD END	尾支撐桿接頭	4
4	BK1889	FRAME SPACER	機身支柱	1
5	HSA2-6	BUTTON HEAD SOCKET SCREW, M2X6	半圓頭內六角螺絲 M2x6	2
6	HMC2-14B	SOCKET SCREW M2×14	內六角螺絲 M2×14	1

No.	Material No.	Description	名稱	Qty
7	HML2	M2 NUT	M2螺帽	1
8	BK1071	TAIL LINKAGE ROD ø1.3	尾拉桿 ø1.3	1
9	BK0922	BALL LINK D3.8x12mm	單頭連接桿 D3.8x12mm	2
10	HSP16-6N	COUNTERSUNK SCREW M1.6×6	圓頭十字螺絲 M1.6×6	1
11	BK1203	LINKAGE BALL (ø3.8)	連接頭 (ø3.8)	1
12	HNN2-10B	TAPPING SCREW(W/WASHER) M2×10	墊圈墊圈自攻螺絲 M2×10	2

HSA2-6
Button Head Socket Screw, M2x6
半圓頭內六角螺絲 M2x6

HMC2-14B
SOCKET SCREW M2×14
內六角螺絲 M2×14

HML2
M2 NUT
M2螺帽

BK0922
BALL LINK D3.8x12mm
單頭連接桿 D3.8x12mm

HSP16-6N
COUNTERSUNK SCREW M1.6×6
圓頭十字螺絲 M1.6×6

BK1203
LINKAGE BALL (ø3.8)
連接頭 (ø3.8)

Step 1 / 步驟一

1. Apply CA or Epoxy when assembling the Tail Support Rod End.
2. Install the Tail Support Bracket and fit the Tail Support Rod.
1. 使用快乾膠接合尾支撐桿接頭與碳纖棒。
2. 將支撐桿座與支撐桿接合。

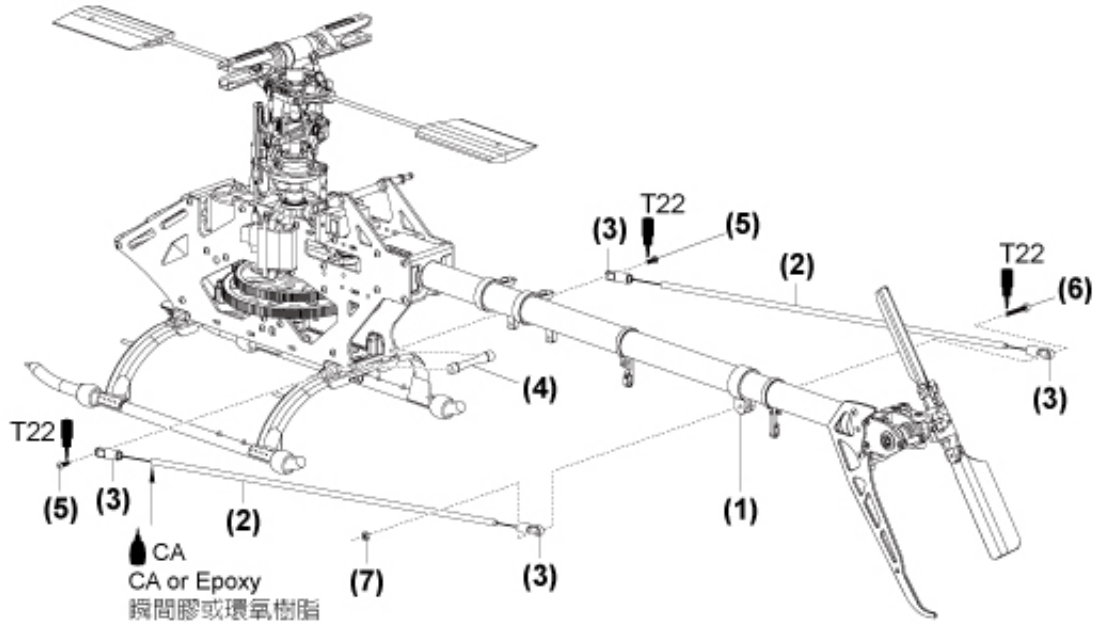

Step 2 / 步驟二

1. Remove the tail servo wheel prior to attaching the Linkage Ball.
2. For the rudder servo, mount the Linkage Ball at 10.5mm from the center of the servo arm as beginning. Please refer to the manual of your gyro to choose the length of the arm.
3. Secure the servo to the Tail Servo Tray and attach the rod to the servo arm.
1. 從尾舵伺服機上將伺服機擺臂拆下，安裝連桿頭。
2. 將連桿頭安裝於距離擺臂中心位置10.5mm處作為初始設定，建議您參考陀螺儀說明書安裝。
3. 將伺服機安裝於尾舵伺服機固定座，並與連桿連接。

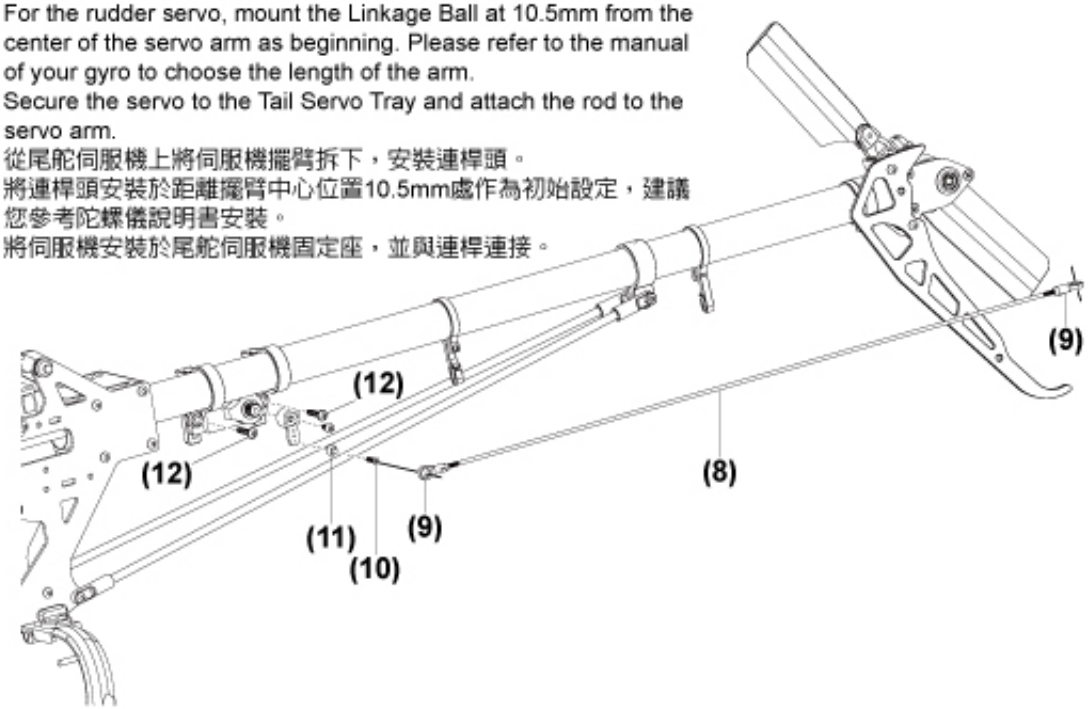

Electric System-4 / 電子系統-4

No.	Material No.	Description	名稱	Qty
1	BK2605	RECEIVER TRAY	接收機座	1
2	HNN2-6B	TAPPING SCREW(W/WASHER) M2×6	圓頭墊圈自攻螺絲 M2×6	4
3	BD1826-B1	ANTENNA TUBE	天線管(黑色)	1
4	BK1088	RUBBER TUBE 10mm	軟管10mm	2

HNN2-6B
TAPPING SCREW(W/WASHER) M2×6
圓頭墊圈自攻螺絲 M2×6

1. Attach the receiver, gyro to the Main Frame by two-sided rubber.
2. Insert the Antenna Tube and fix it by the Rubber Tube.
1. 使用雙面膠固定接收機、陀螺儀於機體。
2. 安裝天線管並使用軟管固定。

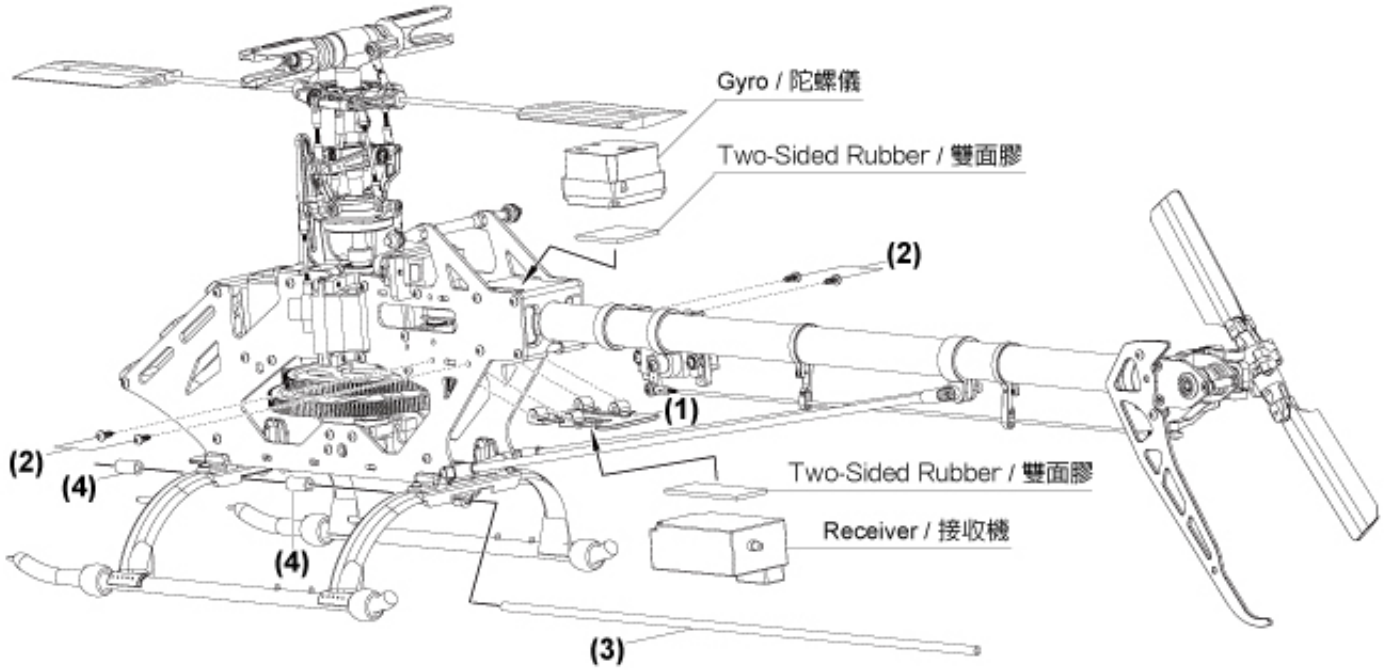

Electric System-5 / 電子系統-5

No.	Material No.	Description	名稱	Qty
1	BK1884	VELCRO STRAPE	新式魔鬼粘束帶	2

No.	Material No.	Description	名稱	Qty
2	BV2607-Y	CANOPY	機身	1
3	BK1002	RUBBER GROMMET	機身固定墊圈	2

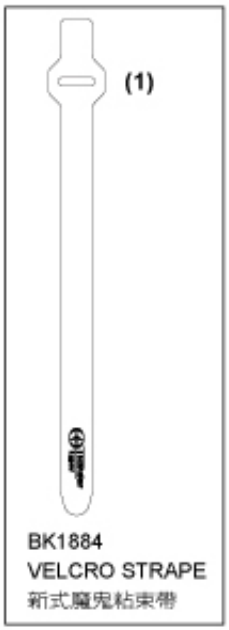

1. Mount the ESC（Option） either between the frames or under the Battery Tray wherever it fits and better cooling.
2. Secure the ESC & Battery（Option） with Velcro Straps to prevent them from being ejected.
1. 速控器（選購）可置放於主側板組內，或電池板下方，以速控器尺寸及散熱效果為主。
2. 使用適當固定束帶固定速控器及電池組（選購），以防止飛行中脫落。

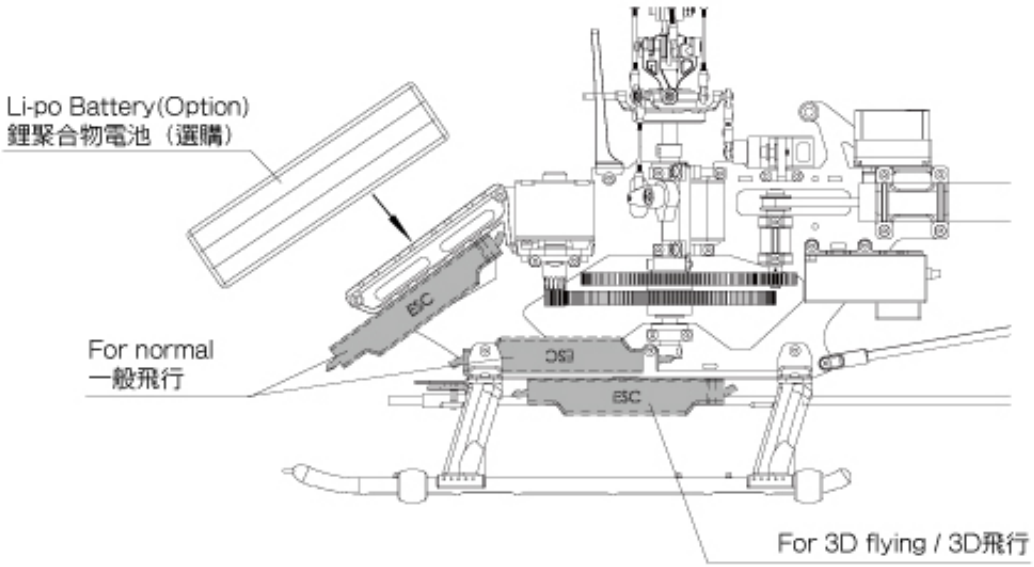

Canopy Assembly / 機艙罩組裝

Install the Rubber Grommet onto the Canopy as drawing.
將避震墊圈安裝至機身（如圖示）。

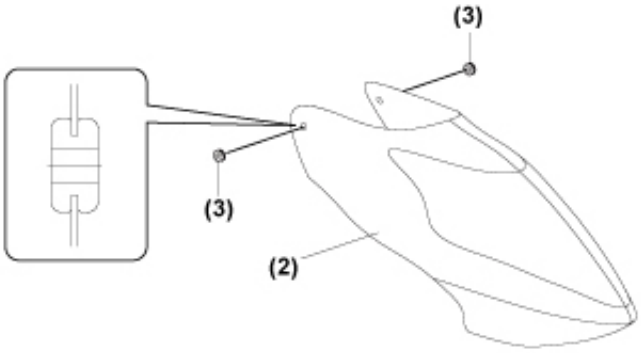

1. Wedge the Canopy in the Canopy Clip.
2. Attach the Canopy by pushing the grommets at the rear of the Canopy onto the Canopy Standoff on the main frames.
1. 將機身嵌入機殼固定夾。
2. 稍加按壓固定墊圈將機身固定於機身支柱上。

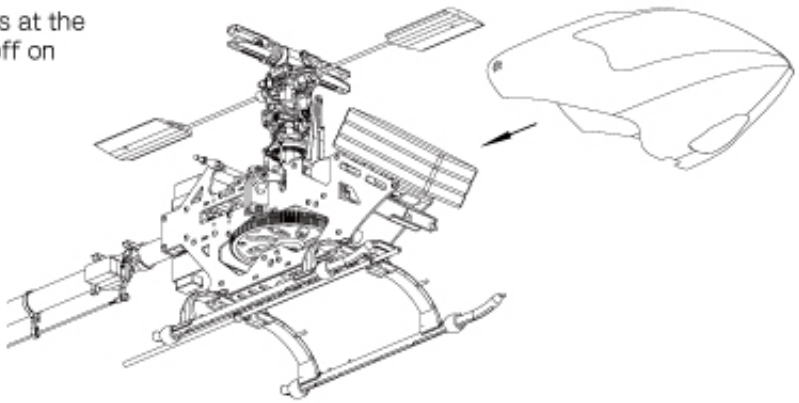

Main Rotor Blade Assembly / 主旋翼組裝

No.	Material No.	Description	名稱	Qty
1	BV6041	FRP MAIN BLADE (PAIR)	玻纖旋翼	2
2	BK1442	BLADE SPACER	主旋翼墊片	2
3	HMC3-20B	SOCKET SCREW M3×20	內六角螺絲 M3×20	2
4	HMM3Z	M3 NYLON NUT	M3 防鬆螺帽	2

HMC3-20B
SOCKET SCREW M3×20
內六角螺絲 M3×20

HMM3Z
M3 NYLON NUT
M3 防鬆螺帽

For Fiber-glass(FRP) or Carbon Blades:

1. Remember to attach the Blade Spacer on the grips as drawing.
2. Install the main blades with the Socket Screw (HMC3-20B, #3). Do not over tighten and ensure the blades run effortlessly.

使用玻纖或碳纖維主旋翼時：

1. 請記得加上主旋翼墊片。
2. 以內六角螺絲安裝上主旋翼。請勿過度鎖緊。

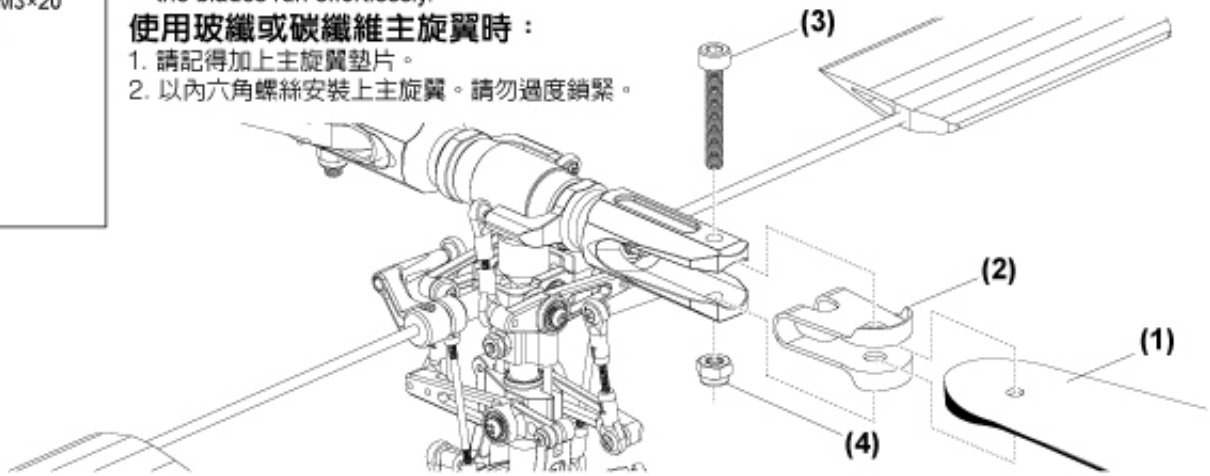

For Wood Blades:

For safety concern, ensure the wood blades are assembled as per the following:

1. Mark around the blade grips with a felt tip marker.
2. Remove the blade grips and cut the covering gently around 1mm inside of the mark. Be careful not to damage the blades.
3. Sand the inside of the grips lightly for better adhesion. Apply CA or Epoxy to blades in area as shown.
4. Attach blade grips and tighten the screws.
5. Wipe off the excess CA or Epoxy.
6. Calibrate and balance the weight before using.

木槳主旋翼組裝：

安全起見，請確實依下列程序組裝主旋翼木槳：

1. 將主旋翼連接座與旋翼進行假安裝，並於旋翼包膜上描繪連接座形狀。
2. 移開連接座，以刀片依連接座形狀小心地切除包膜，請注意勿切割到旋翼本體。
3. 可將連接座內側稍以砂紙打磨，以增加黏著力。將去除包膜的旋翼部份平均塗上快乾膠，如下圖所示。
4. 將旋翼連接座合入旋翼本體，並確實鎖好螺絲。
5. 去除多餘滲出的膠水，即完成。
6. 進行配重及平衡。

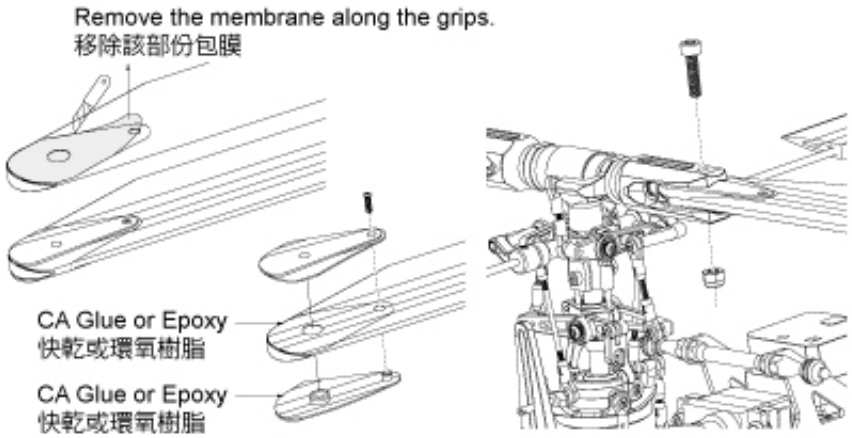

Note / 注意

1. You may need to adjust the linkage to ensure the blade tracking.
2. For safety, we strongly suggest using wood or FRP blades for level flight only, rpm should not exceed 1500. Upgrading to carbon blades for F3C or 3D flying is strongly recommended.
3. For safety the rpm of using carbon blades should not exceed 3200.

1. 您可能必需調整相關的連桿來確保旋翼旋轉軌跡正常。
2. 安全起見，在飛行F3C科目或3D動作時，我們強烈建議您將主旋翼換裝碳纖維槳；木槳或玻纖槳僅適合旋翼轉速不超過1500rpm的一般飛行使用。
3. 安全起見，碳纖維主旋翼轉速請勿超過3200rpm。

INTRODUCTION OF E-CCPM CONTROL SYSTEM / E-CCPM 控制系統介紹

The E-CCPM(Electric Cyclic/Collective Pitch Mixing) system offers the users a control system that can accomplish the same control as traditional M-CCPM(Mechanical Cyclic/Collective Pitch Mixing) system, but with simple machinery. The 120° E-CCPM system utilizes 3 servos for the main control of aileron, elevator and collective pitch. The 3 servos work independently from each other of M-CCPM system, but they work as a team to achieve the same control of the E-CCPM system. For example, if a collective input is given, all of the 3 servos work together to move the swashplate up and down. If an aileron input is given, 2 servos work at the same time to make the swashplate inclined. With servos working together during any given command, the torque is maximized. In addition, E-CCPM system execute the given control inputs with less complex mechanical mixing systems and require less control rods and parts.

In today's modern computer radio system, the E-CCPM system is established in the program. Since the 120° E-CCPM function are pre-programmed, there is no more complicated mixing/setup than the M-CCPM system. For the radio type and brand, please choose which has the 120° E-CCPM function. Please note that it is not possible to use a non-E-CCPM radio system for E-CCPM operation without any other electronic mixer.

電子式E-CCPM控制系統，操作介面與傳統機械式M-CCPM系統控制原理相似，但相較於傳統式整個結構卻更為簡化。120° E-CCPM系統使用三顆伺服機，分別控制副翼、升降舵與螺距混控。在傳統混控模組裡，這三顆伺服機均獨立作業；在E-CCPM系統中，這三顆伺服機互相連動，可視為一個完整的組合。假設目前有一個混控指令，三顆伺服機將一起作動完成十字盤上提或下推；假設一個副翼控制指令下達，另外兩顆伺服機將同時作動，推動十字盤。 所有的控制指令均同時由三顆伺服機一起作動，可發揮最大驅動扭力，確實完成動作。E-CCPM系統執行動作時，整體複雜性遠低於傳統CCPM，更達到簡化零配件與維修便利的目的。
市面上電腦化遙控器系統，均內建E-CCPM模組。透過內建的120° 模組，可簡易的完成設定。建議您選購內建120° E-CCPM遙控器，才可進行120° E-CCPM模組設定。

The given inputs are executed by the team work of the 3 servos through the mixing program of the radio or the electronic mixer. The following are the examples showing how the movement be carried out.

COLLECTIVE PITCH

When a collective pitch command is given, all of the 3 servos move toward the same direction with same speed and same travel distance. This movement is to raise or lower the swashplate and keep the swashplate level. Thus, the required collective pitch can be reached without cyclic input.

透過遙控器內建E-CCPM模組或外接式電子混控器發出指令，由三顆伺服機同部完成動作。下列說明E-CCPM作動原理：

螺距混控

螺距混控模式下，三顆伺服機同步作動，伺服機方向、速度、行程均一致。將十字盤永遠保持在水平的狀態下運作。

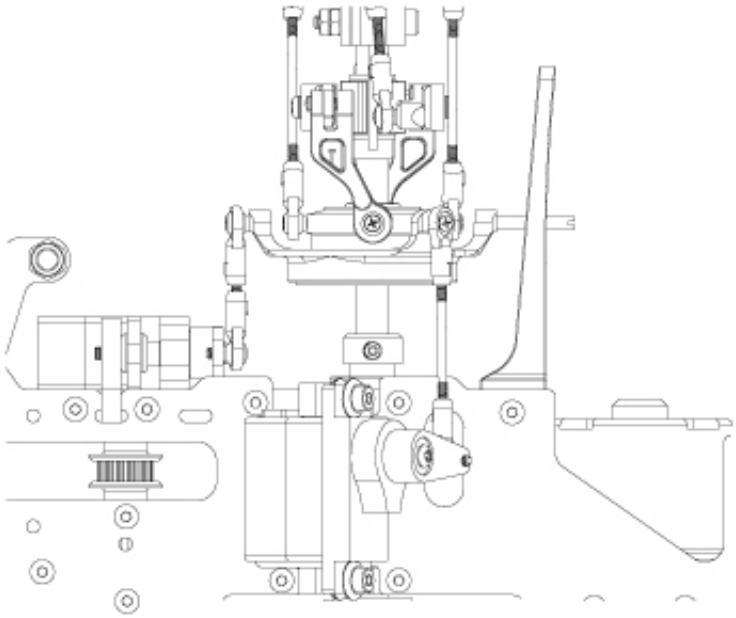

(Right View / 右側圖)

AILERON

Aileron is controlled by the 2 servos in the front. When an aileron command is given, one servo will pull the swashplate downward and the other will push the swashplate upward so that the roll command is executed. They move contrary with same speed and travel distance, and the third servo in the back remains still at this moment.

副翼

副翼由前方兩顆伺服機控制。副翼執行動作時，一顆伺服機上推十字盤、另一顆下拉十字盤，完成動作，此時另一顆伺服機保持中立點。

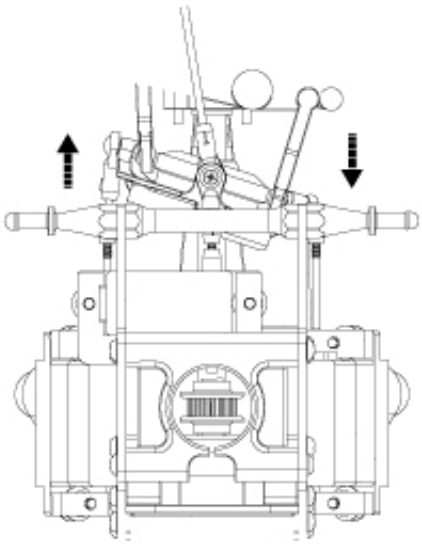

(Rear View / 後視圖)

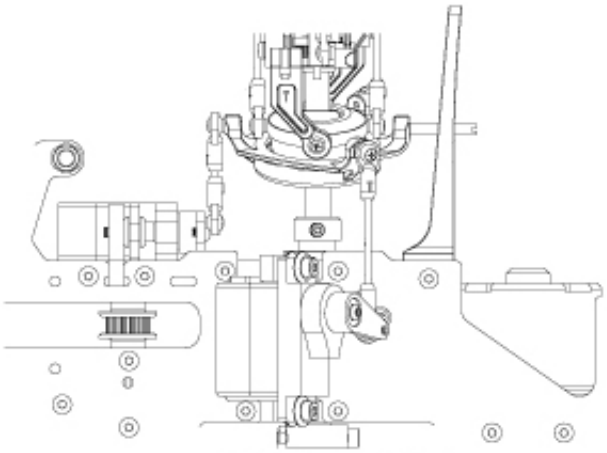

(Right View / 右側圖)

ELEVATOR

The elevator is controlled by all of the 3 servos. When an elevator command is given, the 2 servos in the front move in the same direction and the third one move contrary. For example, when a down elevator command is given, the 2 front servos pull the swashplate downward and the third one push the swashplate upward so that the down elevator command is executed. The 3 servos pull/push the swashplate at the same time to accomplish the given command.

升降舵

升降舵由三顆伺服機同步控制，執行升降舵指令時，前方兩顆伺服機，將會配合第三顆伺服機進行連動。因此三顆伺服機在推、拉十字盤時將會以相同的速度與行程量同時進行完成動作。例如執行降舵時，前方兩顆伺服機拉下十字盤，第三顆上推十字盤完成動作。

(Right View / 右側圖)

SERVO CONNECTING / 伺服機連結

E-CCPM system requires 3 channel for aileron, elevator and an AUX(for pitch). But people may get confused because the 3 channels are not referred to any independent movement. They are operated together to carry out the rolling, flipping and collective controlling. As a result, the following connecting manner is recommended.

1. The rear servo located in back of the swashplate MUST be plugged into the elevator channel.
2. Suppose the servo in the right side is plugged into the aileron channel.
3. The left servo is plugged into the AUX channel.

The following chart is the E-CCPM connecting for your reference. Please also consult your radio instruction manual.

E-CCPM系統需要使用三個通路予副翼、升降舵、與螺距（使用AUX通道）。許多愛好者可能會對於此設定感到困惑，但是在混控模式下，必須藉由三顆伺服機同時完成動作，因此建議依照下列說明完成伺服機與接收機連結。

1. 十字盤後方伺服機與接收機ELEVATOR通道連接。
2. 右側伺服機與接收機AILERON通道連接。
3. 左側伺服機與接收機AUX通道連接。

下列圖示為安裝範例，實際接線方式，請參照您的遙控器使用說明書。

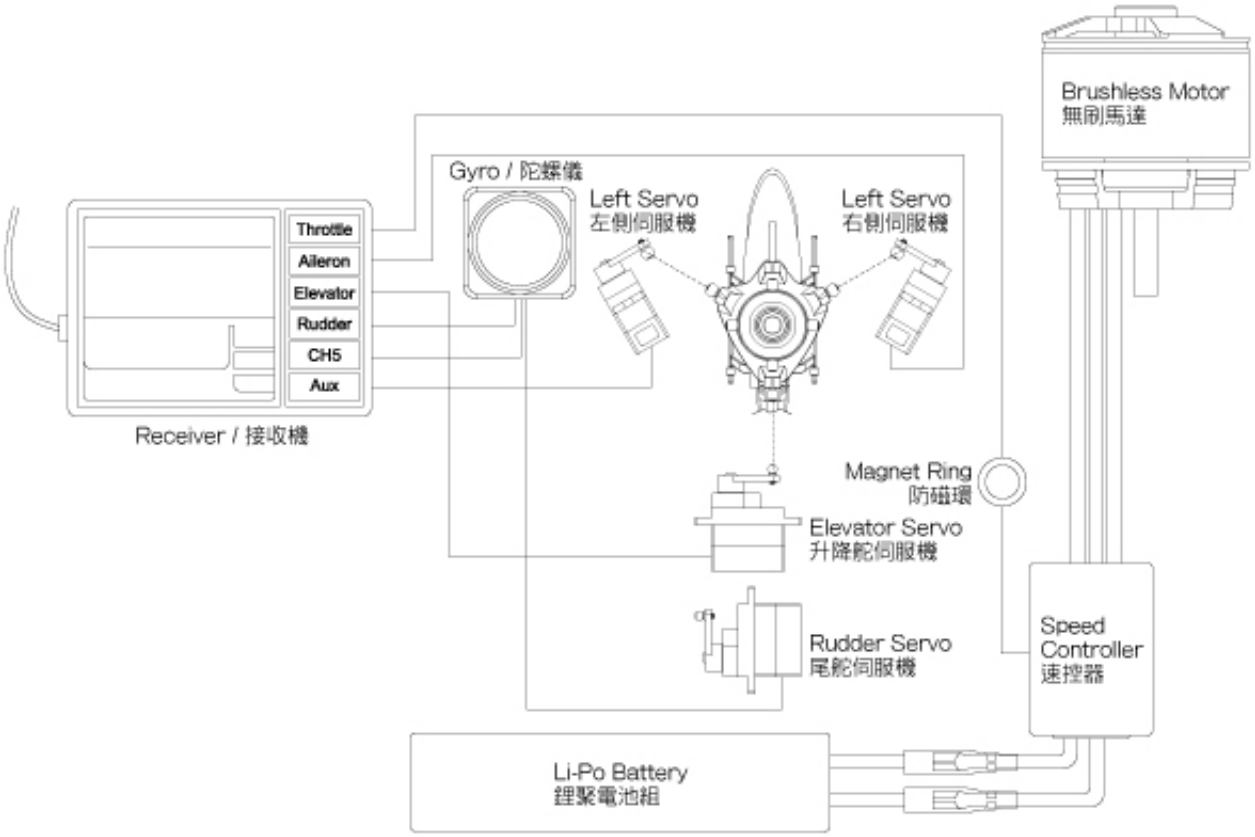

BASIC CONCEPT OF ADJUSTMENT / 基礎設定與調整

⚠ CAUTION / 警告:
For satety ensure to perform this procedure with the motor pinion away from the main gear.
執行此步驟時，請將馬達驅動齒與主齒盤脫離。

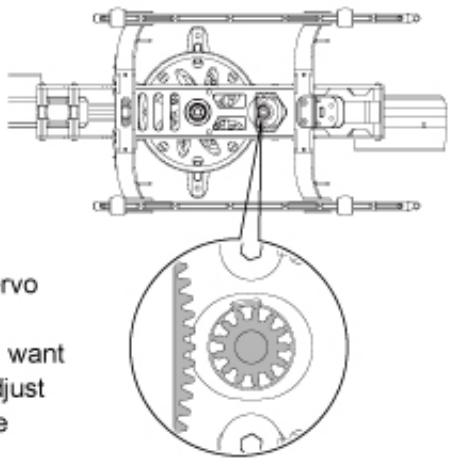

Because people may be confused with the operating manner of the E-CCPM system, we want to explain the basic concept of how to center and trim the servo while adjusting the full travel distance.
First of all, we have to make it clear about what do you want to adjust. Do you want to adjust the servo itself or the control surface? For example, if you want to adjust the servo which is plugged into the aileron channel itself, only the servo will be adjusted. But if you want to adjust the aileron "rolling" surface, the two servos plugged into aileron and AUX channels will be adjusted. Making clear of this basic concept will simplify the process of adjustment.
Furthermore, you have to realize the function of "Reverse", "Sub Trim", "Trim", "Travel Adjustment", "D/R & EXP" and "Swash Mixing" of the transmitter. There are different names for those functions between different brands of the radio, but their definitions are basically the same. The following table shows the functions which those items refer to:

針對E-CCPM模組下，各伺服機的中立點、行程等設定概念作一簡單說明。首先，須先確認要調整的項目為伺服機本身或是整個控制介面。假如您要調整副翼控制通路，您只會調整到副翼控制伺服機；假設您要調整整個副翼控制介面，就必須要調整副翼與螺距控制伺服機。確認完欲調整項目之後，調整的過程將會更加順手。進一步，必須了解發射機上（REVERSE / 正逆轉）、（SUB TRIM / 微調）、（TRIM）、（D/R＆EXP大 / 小動及指數值）、（TRAVEL ADJUSTMENT / 行程量調整）的涵義。市售遙控器因品牌與功能差異，相同的功能卻有不同的名稱，但是基本的意義都是一致的。適用範圍請參照下列表格：

Items 項目		Adjust the Servo Itself 調整伺服機	Adjust the Control Movement 調整控制介面
Reverse / 正逆轉		✓	
Sub Trim / 微調		✓	
Travel Adjustment / 行程量調整		✓	
Trim / 微調			✓
D/R & EXP / 大小動及指數值			✓
Swash Mixing 十字盤混控	± Aileron / 副翼		✓
	± Elevator / 升降舵		✓
	± Pitch / 螺距		✓

Therefore, if you want to adjust servos themselves, please use the "Reverse". "Sub Trim", and "Travel Adjustment". If you want to adjust the control surface, please use the "Trim", "D/R & EXP" and "Swash Mixing".
For example, it is necessary to do minor centering adjustments to achieve the desired servo arm position with the "Sub Trim" function. Under this circumstance, you have to adjust the servo itself, not the control surface.

如欲調整伺服機，必須使用到REVERSE（正逆轉）、SUB TRIM（微調）、TRAVEL ADJUSTMENT（行程量調整功能）；如欲調整控制介面將會使用到TRIM（微調）、D/R＆EXP（大小動及指數值）、SWASH MIXING（十字盤混控調整功能）。
例如，如欲調整伺服機中立點位置，需用到SUB TRIM（微調）功能，而不是其他調整控制介面的功能。

Before starting, make sure the following preparation is done.
1. Set all trims, knobs, and switches to the neutral and zero position.
2. Reset the radio to its factory preset position.
3. Choose the 120° E-CCPM swashplate control mode.

Reversing/Swash Mixing

The moving direction of servos has to be confirmed. You can attach the servo arms to the servos temporarily so that it makes it easier to see the servos moving direction. While giving a positive collective pitch, all of the 3 servos are supposed to be moving in the same direction to descend the swashplate. If the 3 servos are moving in the same direction but to raise the swashplate, you have to use the "swash mixing" function to make it descend. If any of the servos is moving contrary, you have to adjust the one by "reverse" function. Since the moving manner above is determined, the "reverse" function of Aile/Elev/AUX is done.
Next, you have to check the control surface. While giving a cyclic pitch control, the swashplate has to be tilted toward the correct direction. If not, you have to adjust it by "swash mixing" function. For example, if a down elevator command is given, the swashplate is supposed to be tilted forward. If the swashplate is tilted rearward, you have to change the +/- of the elevator control surface by "swash mixing" function. So as the aileron control surface.
To sum up, the "reverse" function is to adjust the servo itself, and the +/- of the "swash mixing" function is to adjust the control surface.

Servo Arms

After the moving direction of the servos is determined, please center the collective control stick. With the collective control stick is centered, install the servo arms of the 3 servos. They are supposed to be level. If the servo arms tilt with a small degree, use the "sub trim" function to adjust it independently. Thus the procedure of centering is complete.

開始設定之前，請先確認下列注意事項
1. 發射機上所有的調整旋鈕、機構均位於中立點。
2. 重新設定原廠內建數據。
3. 選擇E-CCPM 120° 模式。

正逆轉/十字盤混控設定

開啟電源確認伺服機運作方向是否正確，您可以觀察伺服機擺臂作動方向來判斷。發射機送出正螺距指令，三顆混控伺服機運作方向應一致，來下拉十字盤。假設伺服機運作方向一致，但是卻推舉十字盤，此時必須使用十字盤混控設定功能來調整。若是有單獨伺服機運作方向相反，此時應調整單一伺服機正逆轉方向。上述調整工作完成後，即完成十字盤混控設定。
接下來，確認控制介面設定。利用發射機指令來確認十字盤混控系統是否正確運作，如不正確，請調整十字盤混控設定。假設執行升降舵向下指令時，十字盤應該向前傾斜，如果呈現向後傾斜，必須在十字盤混控設定功能裡，修改設定升降舵+/-。副翼調整方式同上。
正逆轉功能（reverse）為單獨調整伺服機用，調整介面需使用十字盤混控設定。

伺服機擺臂

伺服機運作方向正確無誤後，請將所有撥桿調回中立點位置，將伺服機擺臂與連桿相互垂直地安裝至伺服機上。如果有些微差距，可利用副微調裝置完成設定。

Level the Swashplate

After centering the servos, setting the length of the control linkages and attaching them to the link balls, it is important to check the swashplate that it is level. Turn on the transmitter and the receiver, do not connect to the Motor at this moment, and center the collective pitch stick. Make sure all the trims and knobs are centered and the pitch curve should be 0% at low end and 100% at high end at present. The servo arms should be level. While the collective pitch stick is centered and the servo arms are level, the swashplate is supposed to be level. First, check the swashplate from the rear of the model to insure if it's level from left to right. If the swashplate is not level as compared to the frame of the model, adjust either the left or right servo control rods. Next, check the swashplate from a side of the model to insure if it's level from head to rear. If the swashplate is not level, adjust the control rod of the servo in the back.

調整十字盤水平度

將所有連桿與球頭連接，在伺服機保持中立點位置下，確認十字盤水平度。將接收機與發射機電源打開（勿與速控器相連接），確認所有撥桿位於中立點位置，以及（pitch curve）最低點為0％最高為100％。伺服機擺臂應該為垂直狀態。所有的伺服機以及擺臂處於垂直狀態下，十字盤必須位於水平位置。首先，從機體尾部朝基頭方向，觀察十字盤是否左、右呈現水平（如後視圖）；再從機體側面觀察十字盤是否左、右呈現水平（如右視圖）。若十字盤未呈現水平狀態，必須將左、右連桿一起調整。

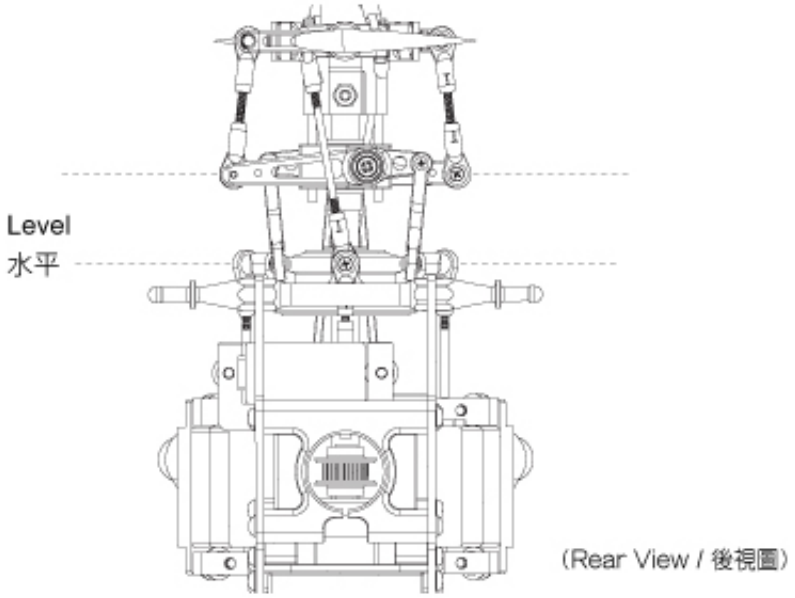

(Rear View / 後視圖)

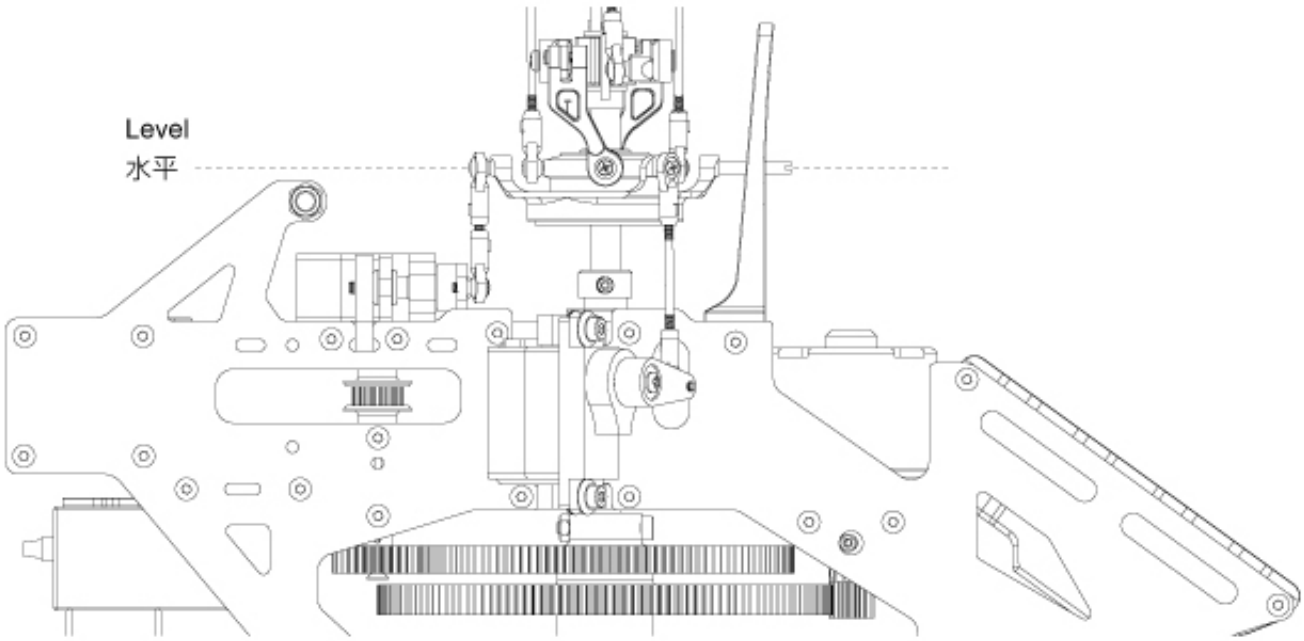

(Right View / 右側圖)

It always happens that the travel of each servo varies slightly. If so, the swashplate would be tilted when giving a full collective pitch command. These variations can be corrected by altering the travel value of each servo slightly by using the "Travel Adjustment" function.

Pitch to Aileron Mixing

Place the collective stick to the full positive pitch position. Check the swashplate from the rear of the model to insure if it's level from left to right. If the swashplate is not level as compared to the frame of the model, adjust either the servos by using the "Travel Adjustment" function.

For example, the swashplate has been tilted to the right side while giving full positive collective pitch. It indicates that the left servo's travel is less than the right servo's travel. You can either increase the travel of left servo or decrease the travel of right servo. Check the swashplate again to insure that it's level.

It is necessary to repeat the procedure while giving full negative collective pitch. Check if the swashplate is level and adjust the servos as needed while the full negative collective pitch is given.

混控模組下，十字盤會隨著連桿的推拉產生傾斜，每一顆伺服機的行程量，可以在遙控器的行程設定功能（Travel Adjustment）改變設定。

副翼與螺距混控修正

將發射機螺距撥桿置於最高側，從從機體尾部朝基頭方向，觀察十字盤是否左、右呈現水平。若未呈現水平狀態，請使用行程設定功能（Travel Adjustment）調整。假設十字盤向右傾斜（如圖示），表示左側伺服機行程量小於右側伺服機，您可選擇增加左邊伺服機行程量或減少右側伺服機行程量，將十字盤調整至水平狀態，將螺距撥桿置於最低側，重複以上步驟以確保十字盤水平。十字盤確認工作相當重要，必須反覆確認至完全呈現水平狀態為止。

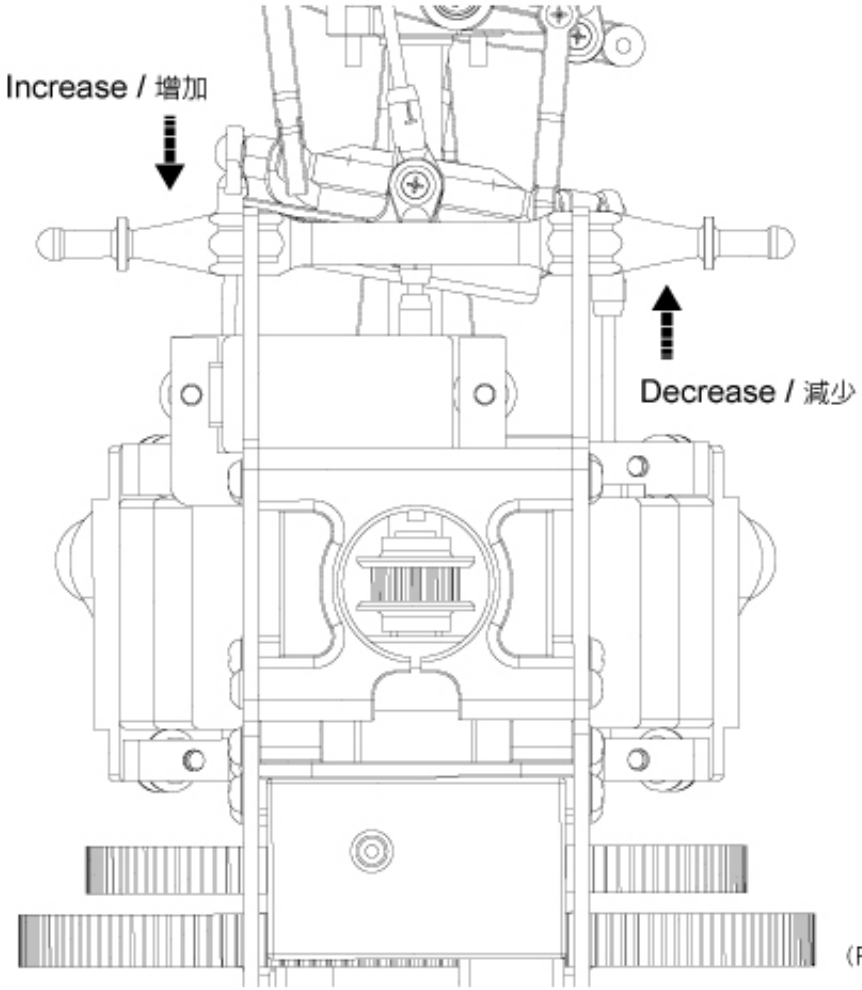

（Rear View / 後視圖）

Pitch to Elevator Mixing

Through the previous step, we've got rid of the pitch to aileron mixing. It is as important to vanish the pitch to elevator mixing. Place the collective stick to the full positive pitch position. Check the swashplate from a side of the model to insure if it's level from head to rear. If the swashplate is not level, adjust the elevator servo by using the "Travel Adjustment" function.

For example, the swashplate has been tilted forward while giving full positive collective pitch. It indicates that the elevator servo's travel is less than the rest two's travel. Please increase the travel of elevator servo. Check the swashplate again to insure that it's level.

It is necessary to repeat the procedure while giving full negative collective pitch. Check if the swashplate is level and adjust the elevator servo as needed while the full negative collective pitch is given.

升降舵與螺距混控修正

完成上一步驟後，接下來校正升降舵螺距。將發射機螺距撥桿置於最高側，從機體側面觀察十字盤是否前、後呈現水平（如下圖）。若十字盤未呈現水平狀態，須使用行程設定功能（Travel Adjustment）調整升降舵控制伺服機。假設十字盤向前傾斜（如圖示），表示升降舵伺服機行程量小於另外兩顆伺服機，需增加升降舵伺服機行程量，使十字盤達到水平。將螺距撥桿置於最低側，重複以上步驟以確保十字盤水平。

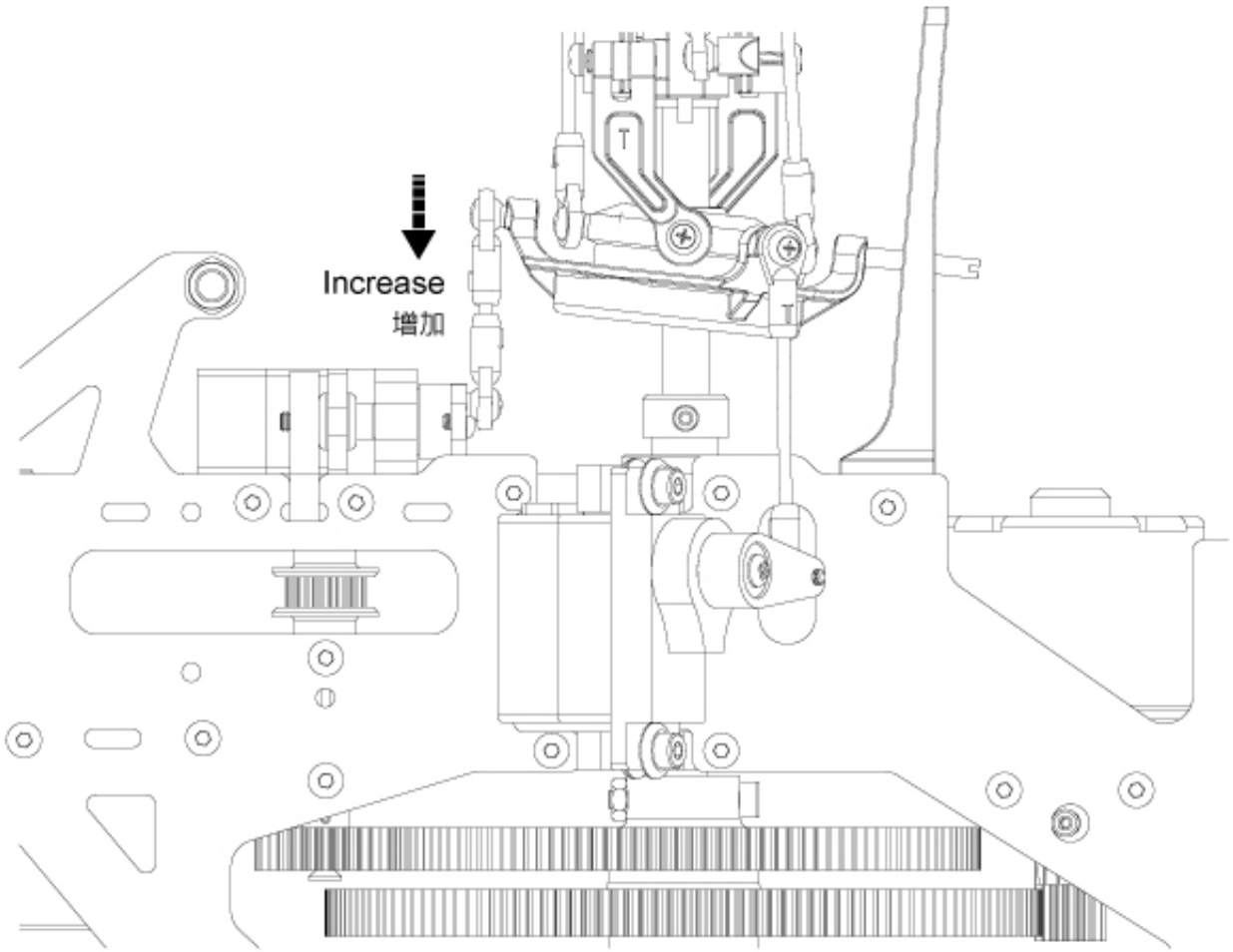

（Right View / 右側圖）

SETTING UP OF LINKAGE / 連桿設定

The lengths of the linkage rods are recommended as the following:
連桿設定建議長度，請參照下列圖示

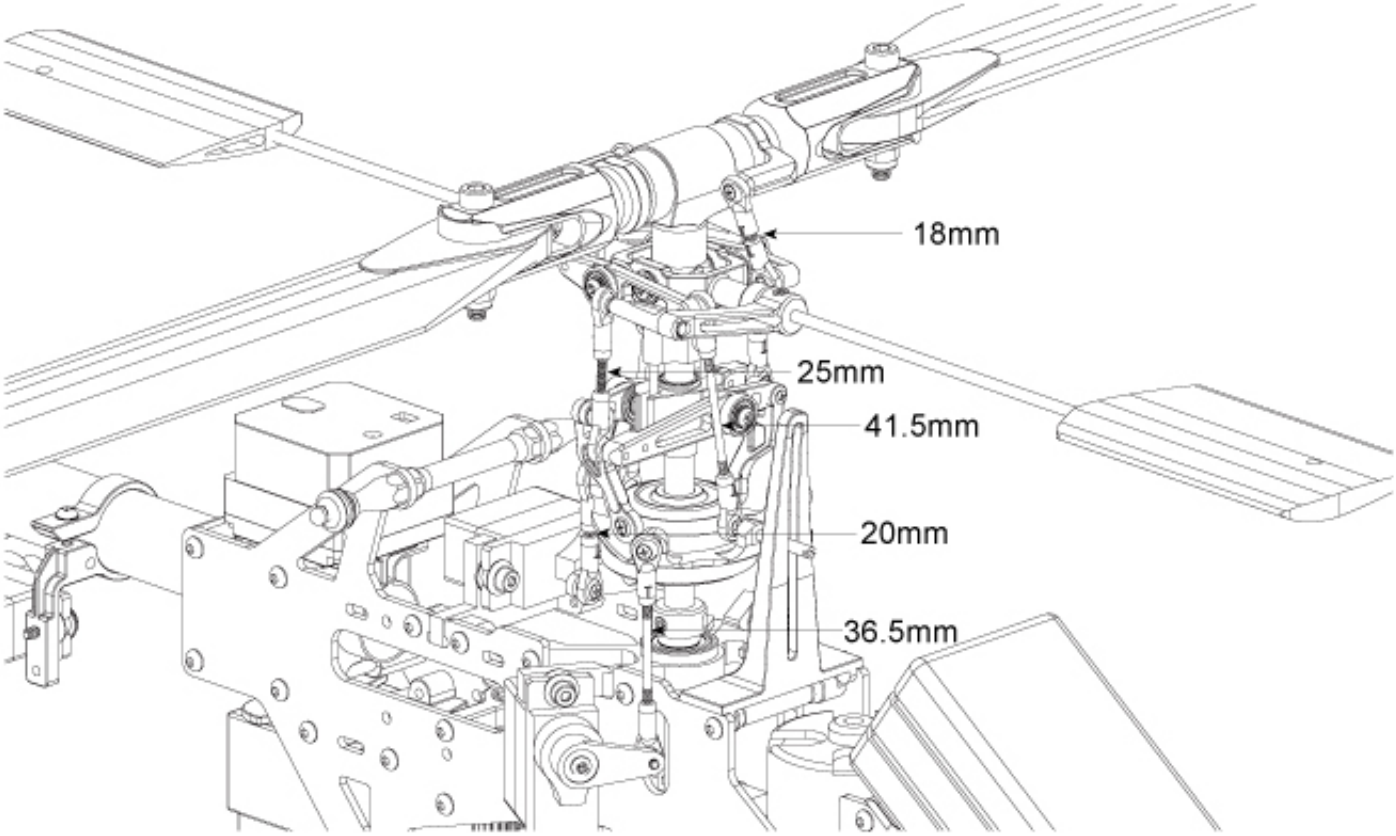

The length is measured by the center of the 2 ball links.
以兩端球頭中心點距離長度為連桿長度

The pushrod length above is suitable for beginner and 3D flying. You can use those lengths as the starting setting, and adjust the lengths for your flying style. The lengths of the pushrods are measured from the center of the linkage ball to the center of another.
圖示連桿長度適用於初學者與3D進階飛行。您可在初步設定時依照圖示數據，後續再依照自己的飛行風格改變設定。連桿長度以兩端球頭中心點距離長度為標準。

SETTING UP MAIN ROTOR COLLECTIVE PITCH ANGLE / 主旋翼螺距設定

Since you have been setting the lengths of the pushrod as mentioned, the linkage should be centered well as described below.
若您依照前述設定連桿長度，連桿位置將如下述。

Centering

1. The levers should be as the drawing below while centering the collective pitch stick.
2. Parallel the flybar, the main blades should be at 0 degree and the swashplate should be level.

中立點

1. 發射機撥桿置於中立點時，升降舵與副翼面應呈現水平狀態（如圖示）
2. 平衡片與主旋翼應呈現平行狀態（0°），十字盤呈現水平。

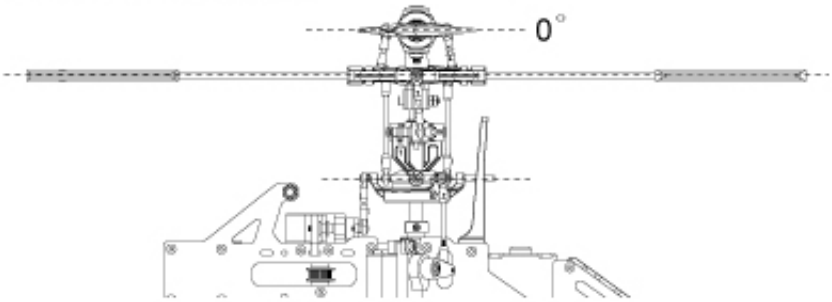

Maximizing

1. Place the collective stick at high end.
2. The main blades should be at 10 degree and the swashplate should be level.

最大設定角度

1. 將螺距撥桿上推至最高點。
2. 主旋翼相對於平衡桿角度為10°，十字盤呈現水平。

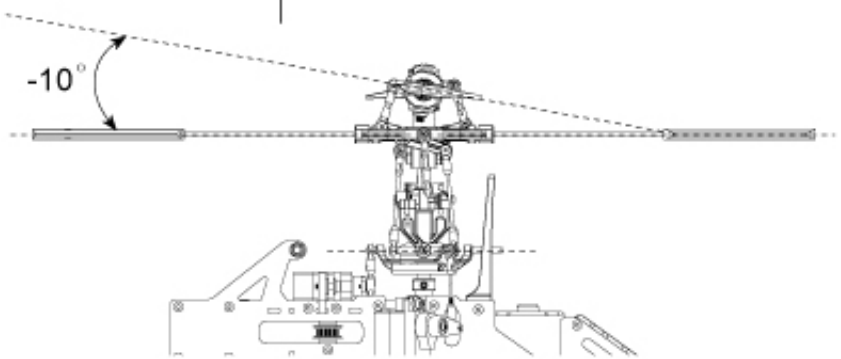

Minimizing

1. Place the collective stick at low end.
2. The main blades should be at 10 degree and the swashplate should be level.

最小設定角度

1. 將混控撥桿下推至最低點。
2. 主旋翼相對於平衡桿角度為-10°，十字盤呈現水平。

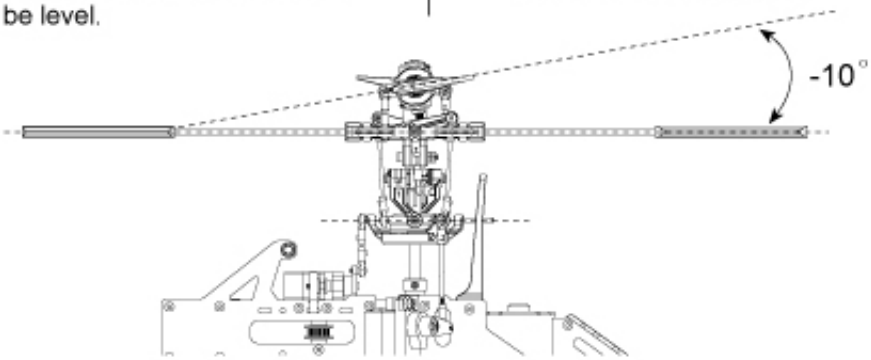

NOTE:

1. The steps above define the limits of the collective pitch setting.
2. The setting of the maximum collective pitch depends on your personal flying skill and style. Too much collective pitch could overload the ESC, motor and the battery. And it will reduce the flying time also.

注意事項

1. 上述步驟為主旋翼螺距設定範圍。
2. 最大設定角度依照您個人的飛行技巧與習慣而定，過大的角度將容易導致速控器、馬達與電池發生過載現象，亦會縮短飛行時間。

SETTING UP DATA FOR YOUR REFERENCE / 設定參考值

The following is the setting up data of pitch curve and throttle curve for your reference only. Please ask experienced pilot to help you if you have never done this before.
下列螺距與油門設定數值，僅提供您參考用。如果您是一位新手，建議您可求助於專業雷虎科技經銷商或有經驗的同好以完成設定。

Novice / 初學者

Throttle Curve / 油門曲線

	1	2	3	4	5
Normal	0	45	65	85	100

Pitch Curve / 螺距曲線

	1	2	3	4	5
Normal	40	-	75	-	100

Pitch Angle / 攻角

	1	2	3	4	5
Normal	-2°	-	+5°	-	+10°

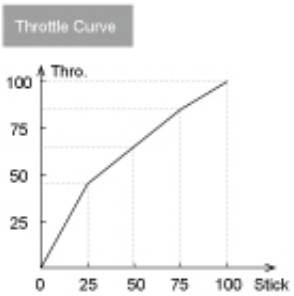

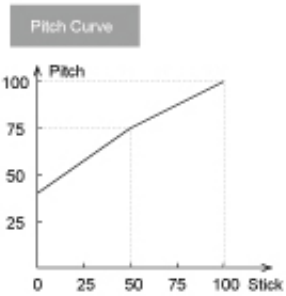

Aerobatic Flying / 特技飛行

Throttle Curve / 油門曲線

	1	2	3	4	5
Normal	0	45	65	85	100
Idle 1	80	-	70	-	100
Idle 2	100	-	80	-	100

Pitch Curve / 螺距曲線

	1	2	3	4	5
Normal	30	-	75	-	100
Idle 1	20	-	75	-	95
Idle 2	5	-	-	-	95
Hold	0	-	-	-	100

Pitch Angle / 攻角

	1	2	3	4	5
Normal	-4°	-	+5°	-	+10°
Idle 1	-6°	-	+5°	-	+9°
Idle 2	-9°	-	-	-	+9°
Hold	-10°	-	-	-	+10°

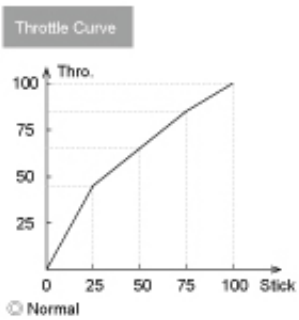

◎ Normal

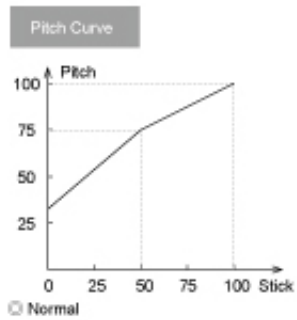

◎ Normal

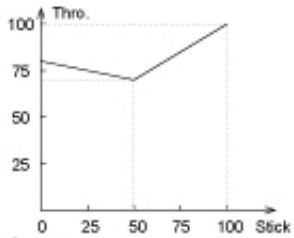

◎ Idle-up 1

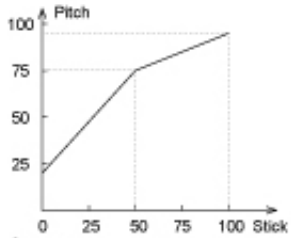

◎ Idle-up 1

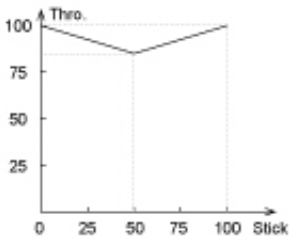

◎ Idle-up 2

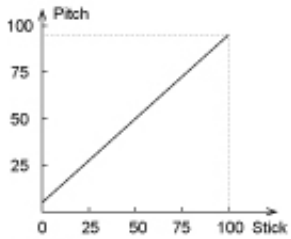

◎ Idle-up 2

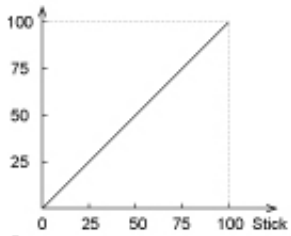

◎ Hold

TAIL CONTROL AND GYRO SETUP / 設定參考值

It is recommended to use a Heading Hold Gyro. With a Heading Hold Gyro, you may not use the trim and the revolution mixing function of tail control.
First, choose the length of the tail servo arm referring to the manual of the Gyro. You may try 10.5mm as the starting setting. Then mount the servo arm for the moment and check the movement of the tail servo:
1. While giving the right rudder control, the servo arm should move forward.
2. Rotate the helicopter with your hand counterclockwise, the servo arm should move forward.

建議使用鎖定式陀螺儀來作為尾舵控制系統，可為您帶來使用與設定上的便利與可靠度。
首先，參考陀螺儀使用手冊來設定尾舵伺服機擺臂長度。建議您可以10.5mm作為初步設定長度。將擺臂固定於伺服機上，並與尾舵拉桿連接。
1. 尾舵控制桿右舵指令，伺服機擺臂向前擺動。
2. 手持機體逆時針轉動，尾舵伺服機擺臂向前擺動。

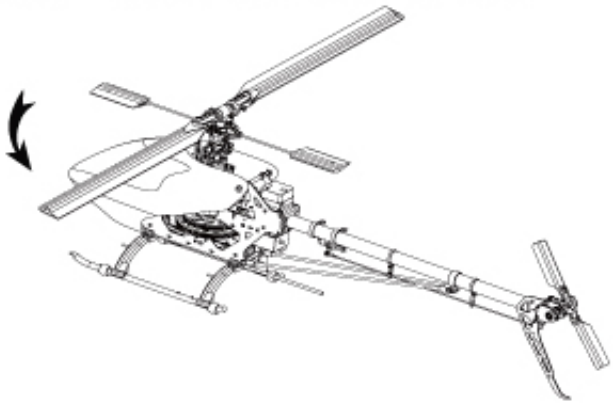

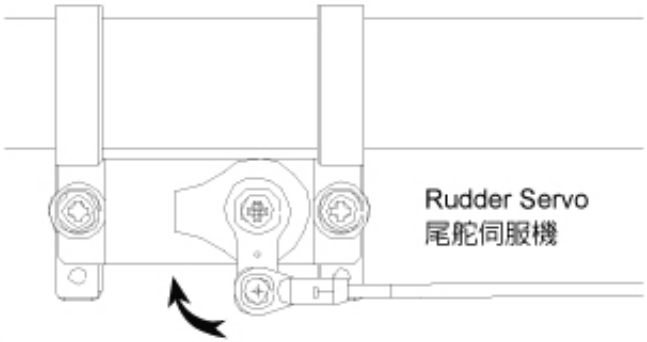

After esuring of moving direction of tail servo, you have to mount the servo arm in the correct position. Please reset the receiver power and do not move the helicopter. While the tail control stick and trim are centered, mount the servo arm vertically. Next, two points may be your concern:
1. The traveling limit of the tail servo may not go beyond the mechanical movement.
2. The tail servo horn should be vertical while the tail rotor are at 0 pitch or with a little offset to the right.(Referring to the drawing below)

確認尾舵伺服機作動方向後，即可將伺服機擺臂安裝於伺服機上。安裝時，記得重新開啟接收機電源且勿移動直昇機。伺服機擺臂須以90°安裝（如圖示）。請確認擺臂位於中立點位置及下列兩點注意事項：
1. 尾舵最大行程量，勿超過尾舵機械行程量。
2. 尾舵伺服機擺臂在中立點時，尾舵螺距應為0°或稍偏向右舵（如圖示）。

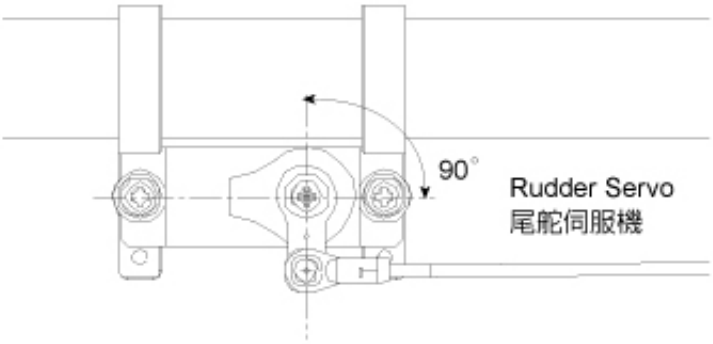

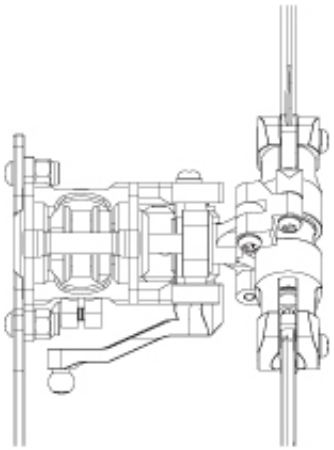

Note
1. To find the traveling limit, you have to adjust the Gyro referring to its manual.
2. To adjust the pirouetting speed of the helicopter, please use the "Travel Adjustment" or the "D/R & EXP" function.

注意事項
1. 您可參考陀螺儀說明書，確認尾舵最大行程量。
2. 調整尾舵自旋轉速，請使用行程設定功能（Travel Adjustment）或是（D/R＆EXP）功能調整。

USING OF LI-PO BATTERY / 鋰聚電池使用注意事項

The mini Titan V2 is an electric RC helicopter. It is strongly recommended to use Lithium Polymer Battery. Please refer to the following information and precaution:

1. Do use a charger that is designed for Li-Poly batteries only.
2. Do not overcharge the battery over the maximum voltage of 4.2V/per cell.
3. Do not discharge the battery below the minimum voltage of 3.0V/per cell.
4. Do not charge the battery unattended.
5. Do not charge the battery in a flammable circumstance.
6. If you want to store the battery for a long time, store them at 3.8V/per cell.

Please understand the information and precaution above and that you agree to accept the full responsibility of using the battery and any injury caused by the battery. Thunder Tiger and its duly authorized distributors assume no liability for damage that could occur by the improper using of the battery.

強烈建議使用鋰聚合物電池，作為 mini Titan V2 迷你電動直升機動力來源。請依照下列事項正確使用鋰聚合物電池，避免危險發生。

1. 使用鋰聚合物電池專用充電器。
2. 勿過度充電，單一電池最大電壓勿超過4.2V/cell。
3. 勿過度放電，單一電池最低電壓勿低於3.0V/cell。
4. 隨時監測電池充電工作，避免發生危險。
5. 勿暴露於易燃環境中，執行充電事項。
6. 長期儲存電池，請保持單一電池電壓3.8V/cell。

請詳細閱讀並充分了解上述注意事項。並同意對於不當使用電池所造成的意外或傷害，由玩家親負全責。雷虎科技與授權經銷商對於不當使用電池所造成的意外或傷害，不負任何法律上的責任。

Helicopters / 直升機本體

Q: What would you check when the helicopter shakes during flying?

A: a. Are the main blades out of track?
b. Are the paddles out of track?
c. Are the main blades well balanced?
d. Are the paddles well mounted at the same distance from the
e. rotor shaft?
f. Is the spindle or the flybar bent?
g. Is the main shaft bent?
h. Is the main rotor hub damaged?
i. Is the motor well installed and is the shaft of the motor bent?
j. Is the tail rotor shaft bent?
k. Is the tail rotor hub damaged?
l. Do all the ball bearings work well?

Q: 空中飛行時，機體發生震動該如何排除問題？

A: a.主旋翼是否發生雙槳？
b.平衡片偏擺？
c.主旋翼平衡是否正確？
d.左、右平衡片是否等距？
e.橫軸、平衡桿是否彎曲變形？
f.主軸是否彎曲變形？
g.主旋翼固定座是否損傷？
h.馬達是否正確安裝？馬達驅動軸是否變形？
i.尾驅動軸是否彎曲變形？
j.尾旋翼固定座是否損傷？
k.全機軸承是否運作正常？

Q: What would you do if there comes out a lot of noise from the helicopter during flying?

A: a. Please check the gear mesh between the main gear and the motor pinion. If there is too much gear mesh, it would generate a lot of gear noise during flying.
b. If the tail drive belt is too loose, it will bring about some noise and may cause the failure of tail control.
c. Check the linkages and control system of main rotor and tail rotor to make sure every linkage is working correctly and not colliding with something else.
d. Check if the motor is running out of balance.

Q: 空中飛行時，機體發生過大噪音該如何排除問題？

A: a. 檢查主齒輪與馬達驅動齒間隙是否過大，過大的間隙將於飛行時產生噪音。
b. 尾傳動皮帶是否過鬆？過鬆的皮帶會產生噪音與降低尾舵效率。
c. 檢查主旋翼與尾旋翼所有控制連桿是否正常運作。
d. 檢查馬達動平衡是否正常。

Motor, Battery and Speed Controller / 馬達、電池與速控器

Q: How to choose the motor and the pinion?
A: It depends on the battery and the motor. The following is the formula of how to calculate the wanted head speed.
Motor RPM = Motor KV x Volt(3.7V) x Series x constant (0.8)
Head Speed = Motor RPM / Gear Ratio
Gear Ratio = 150T / Motor Pinion

Example:
We choose TT OBL 29/37-10H optional brushless motor.
If using a 3S(11.1V) Li-Po battery, the motor rpm should be
3700KV x 3.7V x 3S x 0.8=32856 rpm
And we expect to have the head speed of 2800~3000 rpm
32856 / Gear Ratio=2900
Gear Ratio=11.33
The pinion would be 150T/11.33=13.24
So we choose 13T as the motor pinion.

Q: 該如何選擇適合的馬達與馬達驅動齒
A: 選擇馬達時應同時注意與速控器的搭配性，您可依照下列公式計算出主旋翼轉速、馬達轉速與搭配的齒輪比
馬達轉速＝馬達kv值×電壓（3.7v）×串聯電池數×常數（0.8）
主旋翼固定座轉速＝馬達轉數/齒輪比
齒輪比＝150T/ 馬達齒

實例一：
使用雷虎科技無刷馬達TT OBL 29/37-10H
搭配3S(11.1V)鋰聚電池
馬達轉速=3700KVX3.7VX3SX0.8=32856rpm
欲將主旋翼轉速控制在2800-3000rpm左右
主旋翼轉速=32856/齒輪比=2900
因此齒輪比需為11.33
150T/11.33=13.24
所以馬達齒使用13T

Q: Which motor and speed control is recommended?
A: The TT OBL29/37-10H optional brushless motor(No.2382) and the ACE BLC-40(No.8041-H) speed control are recommended.

Q: 建議搭配使用何種速控器、馬達？
A: 建議使用雷虎科技無刷馬達TT OBL 29/37-10H（料號：2382），搭配ACE BLC-40（料號：8041-H）。

BALL LINK REAMER (Ø3.8mm) 球頭絞刀 Item No. / 料號：1198

Step 1 / 步驟一

1. Attach the Ball Link to the Reamer.
2. Make sure that the Ball Link is perpendicular to the reamer as shown.
1. 將絞刀與連接頭接觸。
2. 確認絞刀壓入時與連接頭平面垂直。

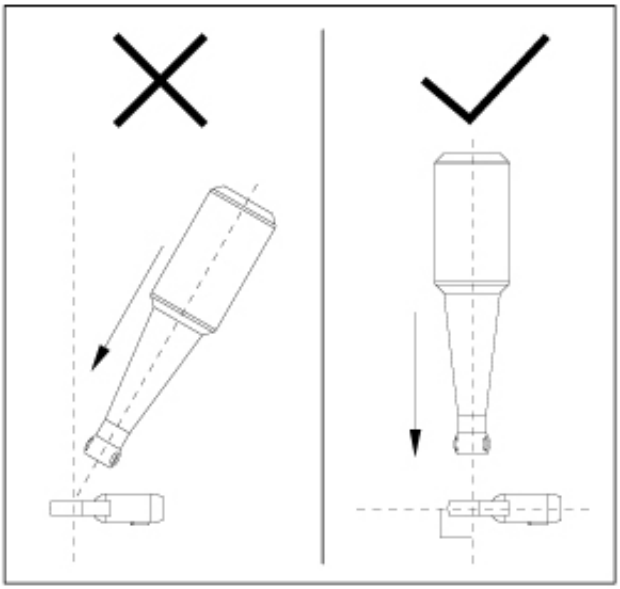

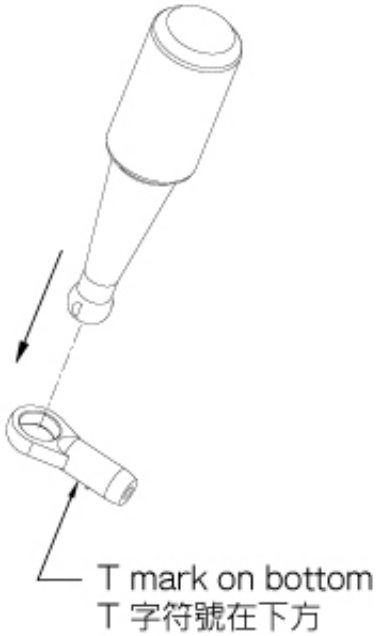

Step 2 / 步驟二

1. Turn the Reamer clockwise to trim the inner hole of the Ball Link.
2. Turn the Reamer once at a time and do not over trim the Ball Link.
1. 小心將絞刀以順時針方向旋轉，使連接頭擴孔。
2. 每一次旋轉一圈做確認，以免孔擴太大。

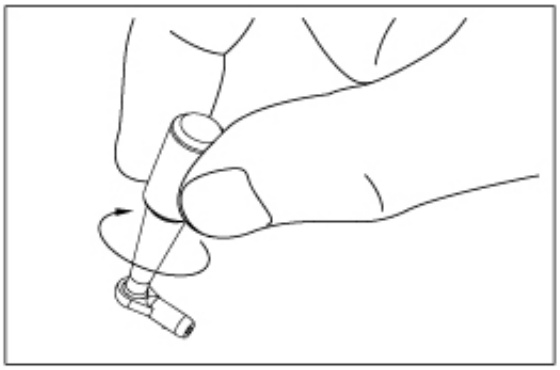

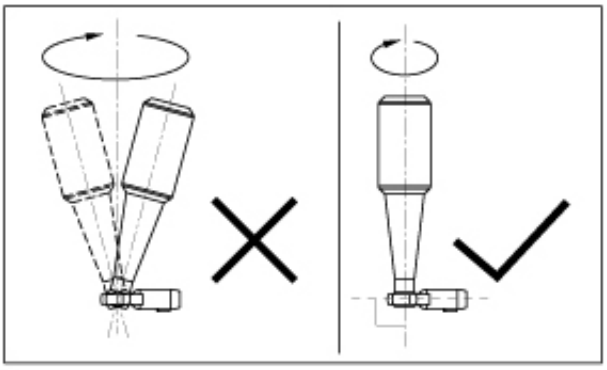

One Way Bearing Releaser 單向軸承退出器 Item No. / 料號：1080

INTRODUCTION 產品簡介

The one Way Bearing Releaser is designed for E325. You can release the one way bearing very easily from the main gear so that you can change the main gear without changing the one way. This saves the maintenance cost indeed.
專為mini Titan E325設計的單向軸承退出器。使用此特殊的治具，您可以輕易地分解與安裝mini Titan E325的主齒盤與單向軸承，且不使單向軸承因組裝不當而損壞。在維修的時候，能夠大幅節省您的花費與時間，是您不可缺的一項維修利器。

FEATURES 特點

- Suitable for mini Titan E325 series helicopter.
- Tools for releasing the one way bearing of the main gear as well as for putting it back in.
- User friendly and easy operation.
- 適合mini Titan E325全系列電動直升機
- 用於分解與安裝主齒盤單向軸承
- 操作簡單、使用容易

RELEASING 分解

Step 1 / 步驟一

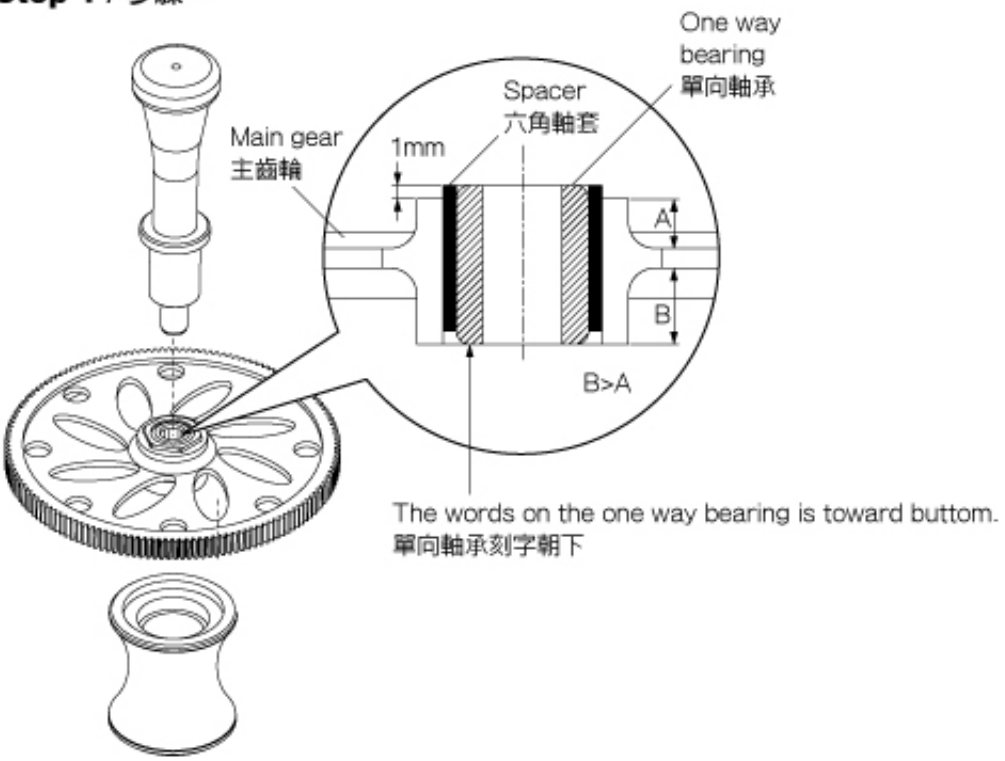

BLADE BALANCER 主旋翼平衡器 Item No. / 料號：1077

INTRODUCTION 產品簡介

Thunder Tiger Blade Balancer is a multi-function balancer for your blades. You do the balancing job before putting the blades onto the heli so that you get rid of the vibration problem. Please reviewing the manual thoroughly that you grasp the function of the balancer.

雷虎科技主旋翼平衡器，可以進行主旋翼的動、靜平衡量測與調整。我們建議您在使用任何的主旋翼之前，都儘可能地進行主旋翼動、靜平衡調整，以免直昇機實際飛行時發生無可預期的震動。請仔細閱讀並保存此使用說明書，以徹底瞭解該平衡器的功能與使用方式。

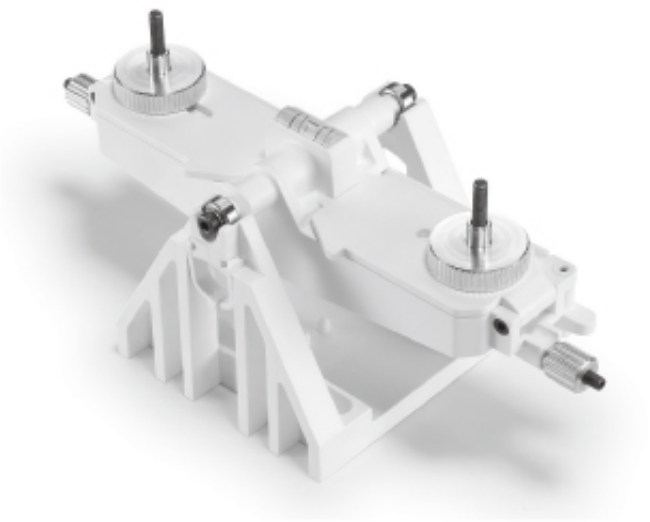

Set up 安裝

Step 1 / 步驟一

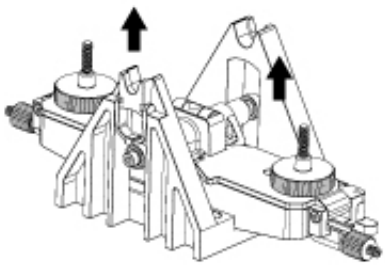

Step 2 / 步驟二

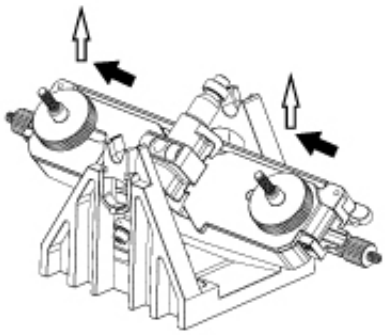

Step 3 / 步驟三

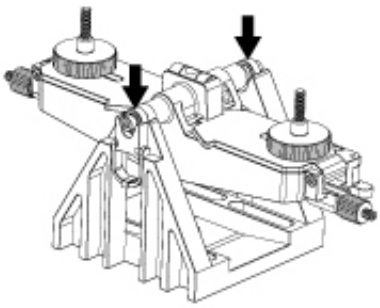

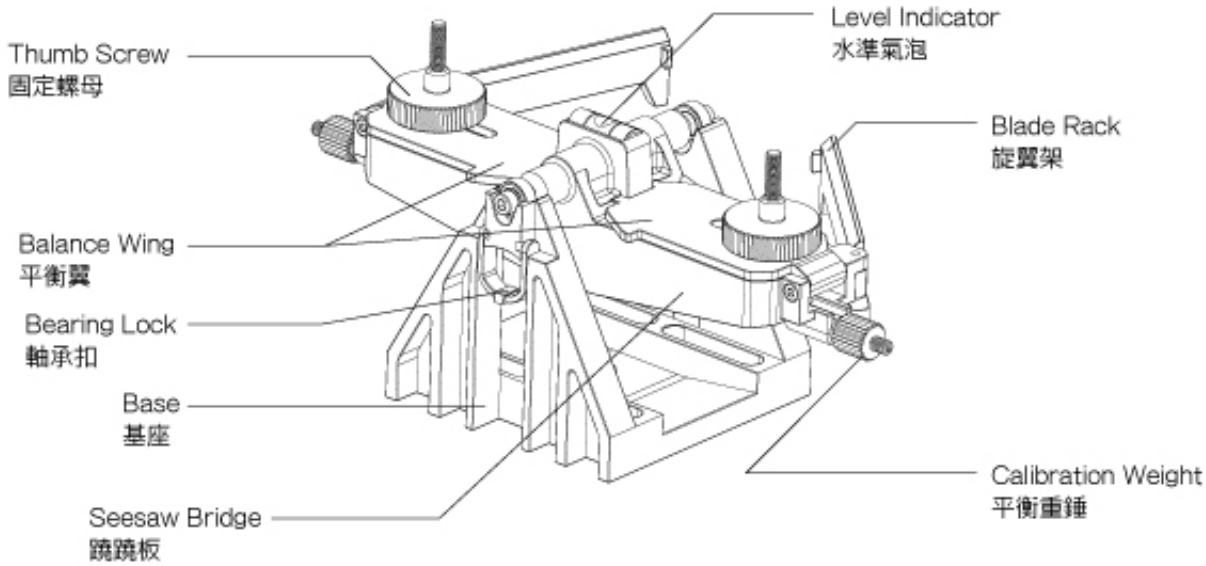

BLADE BALANCER 主旋翼平衡器 Item No. / 料號：1077

FEATURES 特點

- Multi-function blade balancer.
- The Seesaw Bridge can be unloaded and easy to store.
- Bridge with ball bearing support for accurate balance.
- Bridge with a level for easy adjustment and inspection.
- Bridge with weights for calibration.
- Suitable for static balancing.
- Suitable for dynamic balancing.
- 多功能主旋翼平衡器
- 蹺蹺板可以卸下並收藏於基座內
- 蹺蹺板支承處配有滾珠軸承以達到精準量測要求
- 附有水準氣泡方便調整與觀測
- 附有平衡重錘以作為初始率定
- 可進行動、靜平衡量測

USERS GUIDE 使用說明

Dynamic Balance 動平衡

1. Open the Blade Rack.
   打開旋翼架

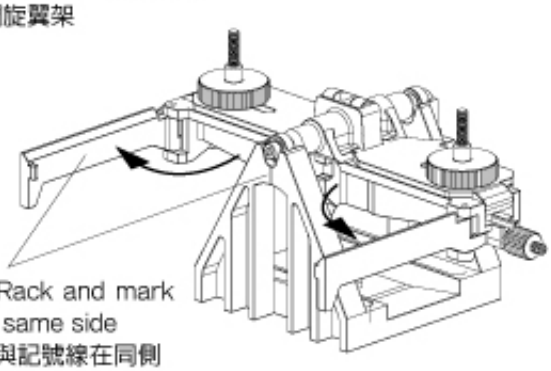

Blade Rack and mark at the same side
旋翼架與記號線在同側

2. Attach the Seesaw Bridge with the Bearing Lock.
   將蹺蹺板以軸承扣固定

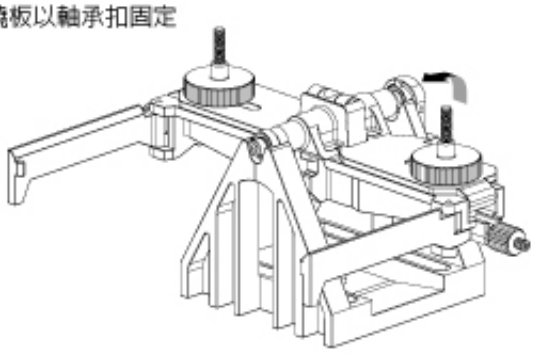

3. Use the Calibration Weight to reset the bridge and make sure the bridge is leveled via inspecting the level.
   使用平衡重錘率定平衡器，並觀察水準氣泡是否位於中間位置。

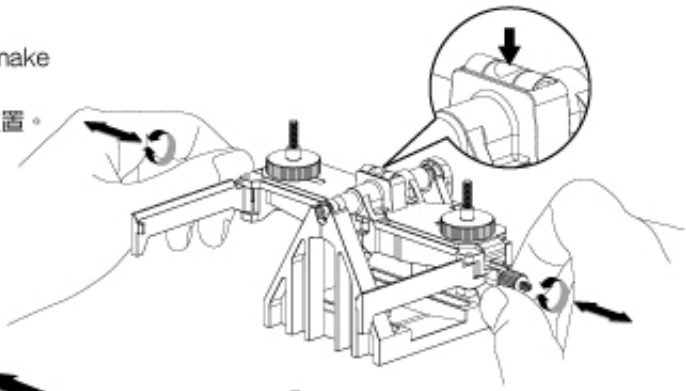

4. Place the blade on the rack then you can mark the C.G. when the bridge is leveled.
   將旋翼置於旋翼架上尋找重心，並在重心位置上作記號。

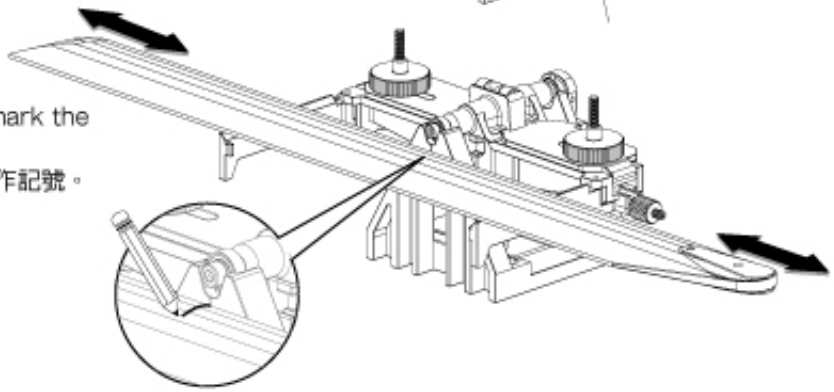

BLADE BALANCER 主旋翼平衡器 Item No. / 料號：1077

USERS GUIDE 使用說明

Static Balance 靜平衡

1. Use the Calibration Weight to reset the bridge and make sure the bridge is leveled via inspecting the level.
使用平衡重錘率定平衡器，並觀察水準氣泡是否位於中間位置。

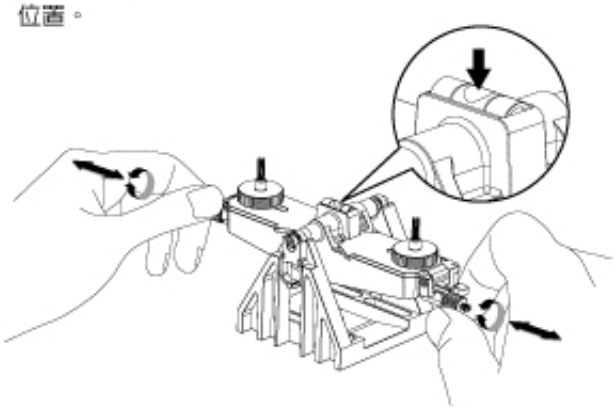

2. Put the blades on the Seesaw Bridge and secure them with the Thumb Screw.
將主旋翼鎖至鏡鏡板上。

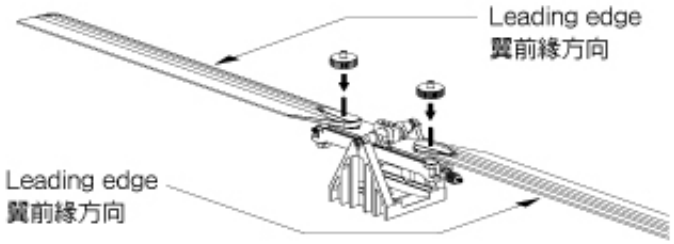

3. Pull the blades all the way straight so that you can check the weight of the blades and do the balancing.
確定兩主旋翼呈一直線以進行靜平衡調整。

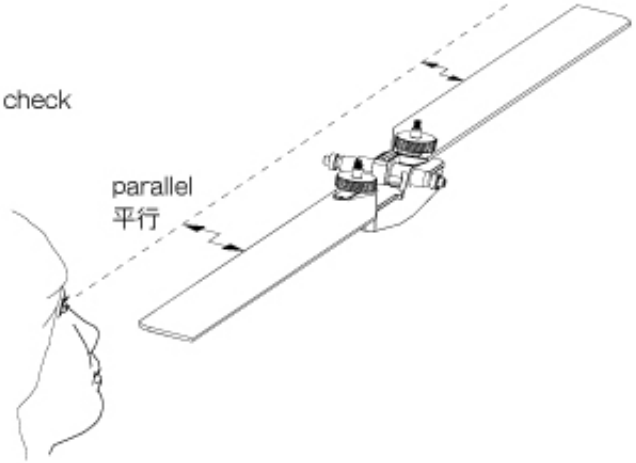

NOTE / 注意事項

- For blades length above 550mm, please open the Balance Wing.
- For 4mm bolt holes, please use the collar included.
- For 5mm blot holes, please turn over the Mounting Cap.
- 量測550mm以上主旋翼，請打開平衡翼。
- 4mm的主旋翼固定孔，請使用內附的軸套。
- 5mm的主旋翼固定孔，請將固定螺母倒轉。

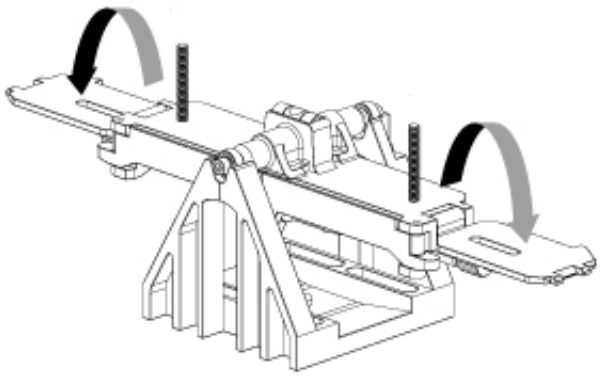

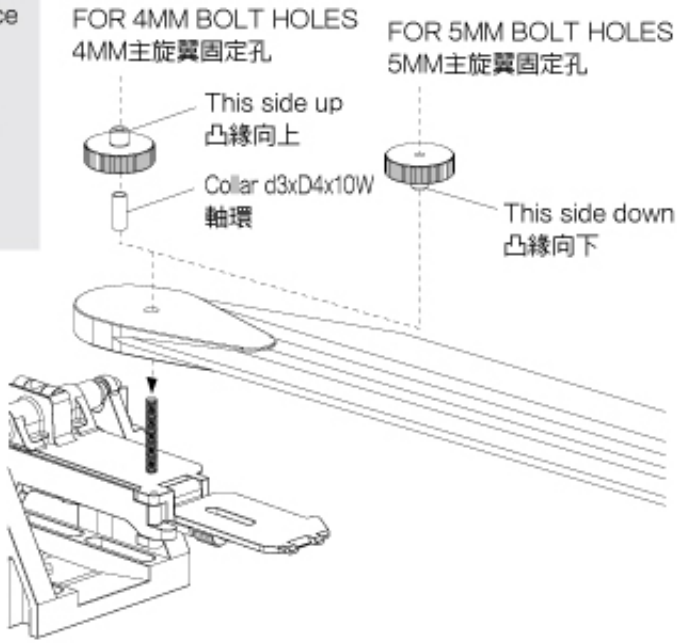

BLADE BALANCER 主旋翼平衡器 Item No. / 料號：1077

STORAGE 攜帶與收藏

The Seesaw Bridge can be put inside the base for easy storage.
蹺蹺板可以卸下並收藏於基座內

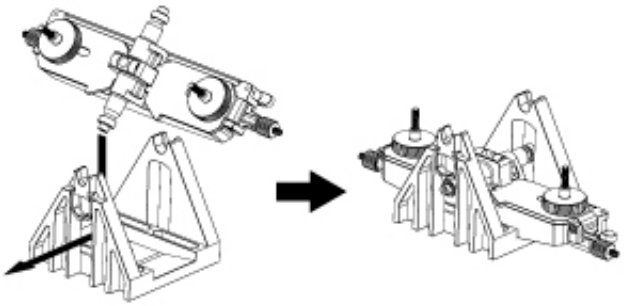

RECOMMENDED BALANCING PROCESS 平衡執行流程

The following is the recommended balancing process to correct the position of the C.G. as well as balancing the weight of the blades.
請參考以下流程修正主旋翼重心位置，同時針對旋翼重量進行平衡。

1. Please do the "Static Balance" first and find out which blade is lighter than the other. The lighter blade is supposed to be the object to be adjusted. (Mark A)
   請執行靜平衡量測，並選取較輕的旋翼作為調整對象（做上記號A）。

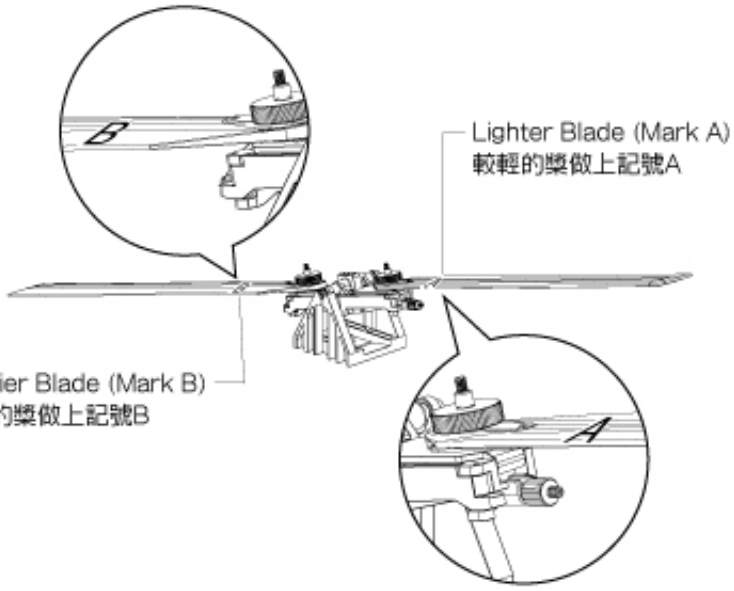

2. Proceed with the "Dynamic Balance" and check the C.G. position of both blades. Adjust the C.G. position of the lighter blade (A) as illustration. Make sure the C.G. position of the lighter blade is the same as the heavier one.
   針對較輕的旋翼（A）進行重心位置調整，目的在使兩旋翼的重心位於相同位置。

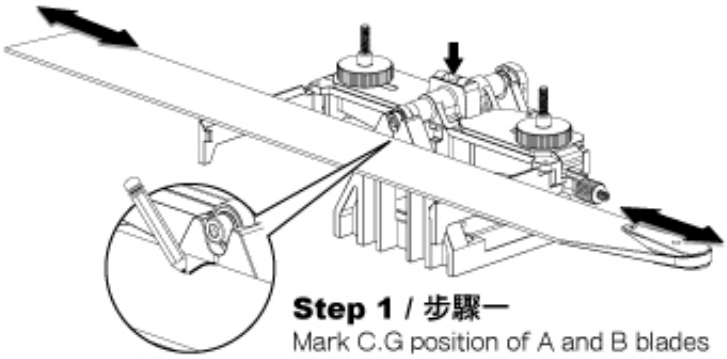

Step 1 / 步驟一
Mark C.G position of A and B blades
在A跟B旋翼上做重心的記號

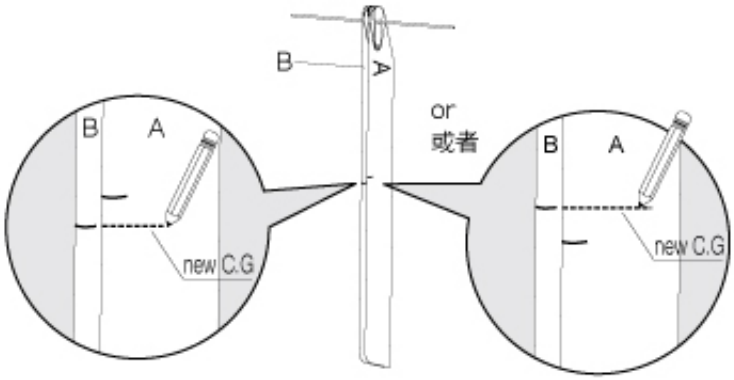

Step 2 / 步驟二
Mark new C.G position on A blade
(Same position with B blade)
在A旋翼上標示新重心記號
（與B重心相同位置）

BLADE BALANCER 主旋翼平衡器 Item No. / 料號：1077

RECOMMENDED BALANCING PROCESS 平衡執行流程

Step 3 / 步驟三

Change C.G to new postion by sticker
使用配重貼紙將旋翼重心移至新位置
（與B重心相同位置）

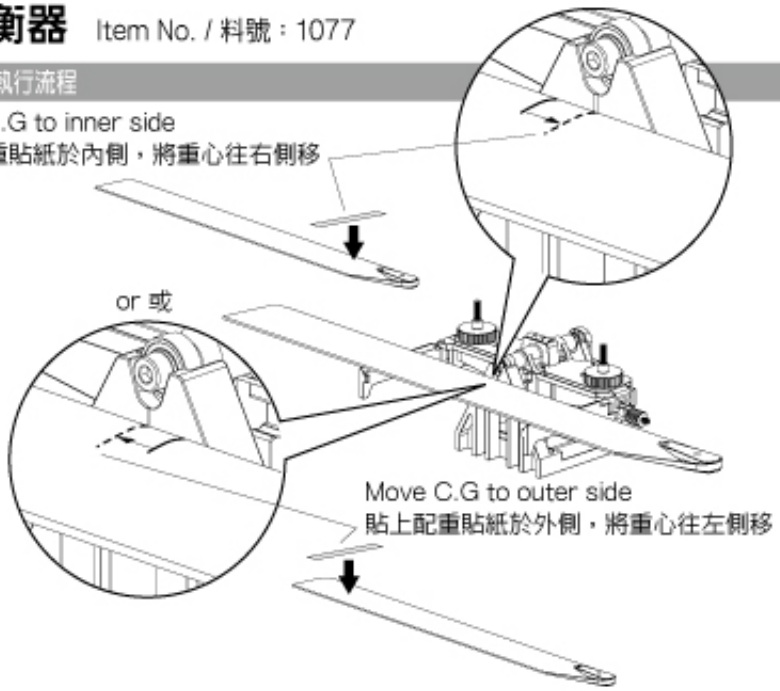

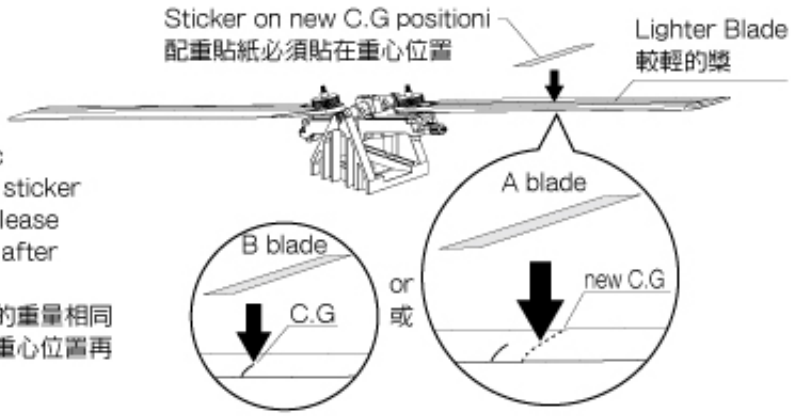

3. After adjusting the C.G., please do the "Static Balance" again. It is recommended to use the sticker on the new C.G. position of the lighter blade. Please note that the C.G. position won't be changed after static balance.
再度進行旋翼的靜平衡重量調整，目的在使兩旋翼的重量相同。請注意配重貼紙必須貼在新的重心位置上，避免重心位置再度改變。

NOTE / 注意事項

Please note how to use the sticker to balance the blade. It may be easily lifted off if you don't tape it correctly as illustrated.
請注意配重貼紙的使用方式，若配重貼紙的貼法錯誤，將很容易在飛行中被撕離旋翼表面。

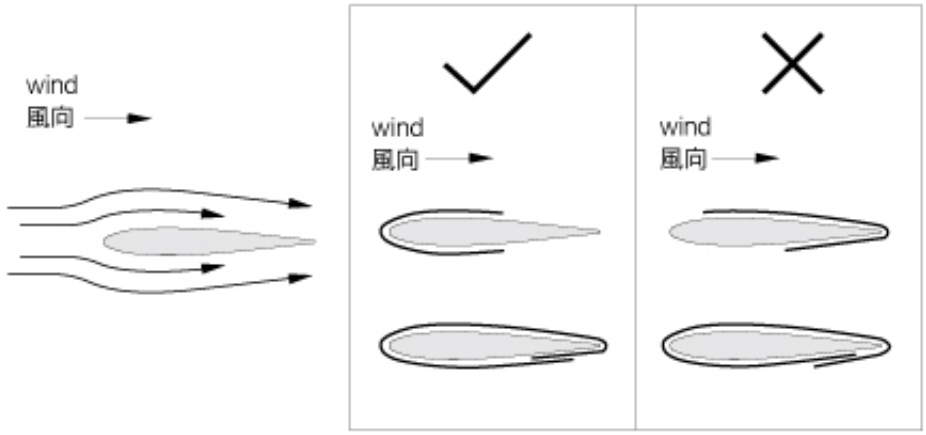

Training Gear 直昇機練習架 Item No. / 料號：1079

INTRODUCTION 產品簡介

For novice consideration, the Thunder Tiger Training Gear is the best learning partner. It protects the heli from the possibilities of turning over, and makes the heli survive from certain mistakes.
雷虎科技的直昇機練習架，適用於全系列電動直昇機。在練習飛行的過程中，它能有效地防止直昇機轉倒，並將直昇機重落地時可能產生的損傷減至最低，是初學者最好的學習輔助工具。

FEATURES 特點

- Protect the helicopter from turning over.
- Easy installation.
- 防止直昇機轉倒、重落地
- 組裝簡單、易於攜帶收藏

ASSEMBLY 組裝

1. Assemble the Training Gear.
   依圖示組裝練習架。

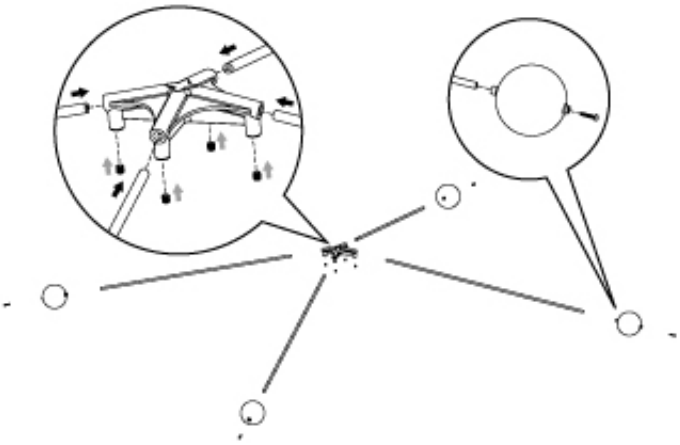

2. Attach the Training Gear to the heli' s skid with rubber band.
   使用零件包內所附之橡皮筋將練習架固定至直升機腳架之下。

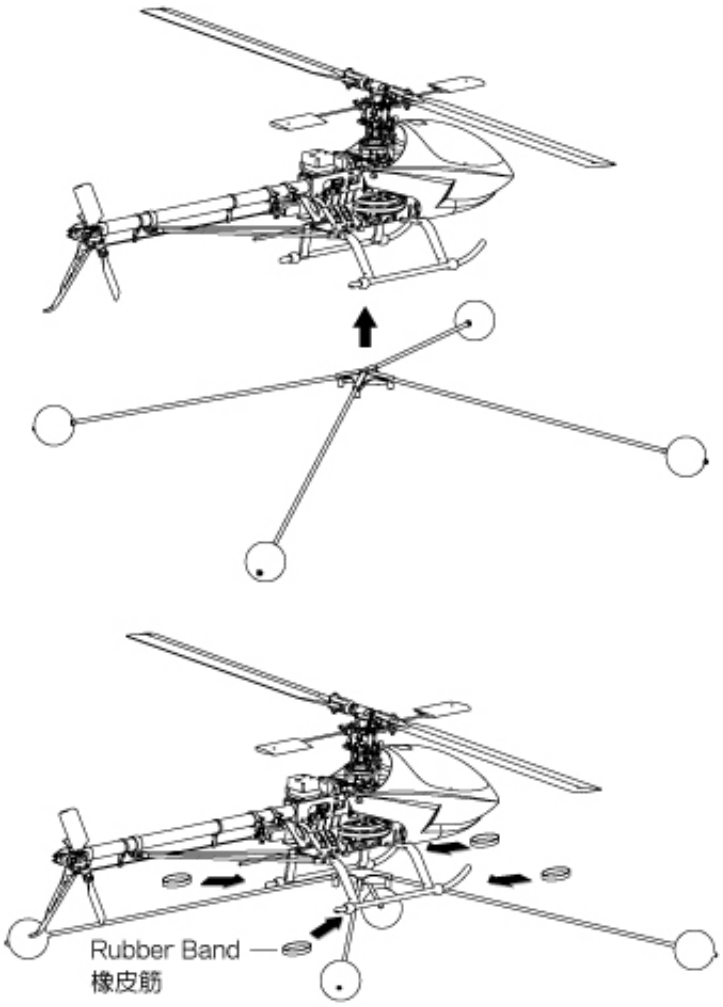

STORAGE 攜帶與收藏

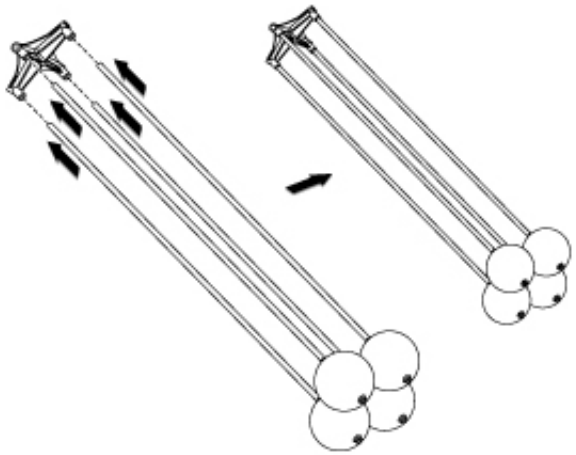

ACE RC T3AC Balance Charger for Li-Po Battery
T3AC平衡功能鋰電池專用充電器

Item No. / 料號：2536

The ACE RC T3AC BALANCE CHARGER is specifically-designed for charging 2-cell and 3-cell Li-Po battery packs. The compact-size charger features built-in switch adaptor for input power source and individual cell balancing function for safe charging.

ACE RC T3AC是2至3片式鋰電池專用充電器，具備高安全性之分壓充電及平衡功能，並內建變壓轉換，迷您體積中的強大的功能絕非其他市售充電產品可比擬！

Specification 基本規格:

規格摘要	規格
Power supply voltage 母電源電壓	110-240V AC
Cell count range 適用電池片數	2-3cells
Max. charge current 最大充電電流	3×650mA
Dimension approx 尺寸	100×60×35mm
Weight approx 重量	180g

Connect to 2-Cell Li-Po Battery
連接 2-Cell 鋰電池(7.4V)

Connect to 3-Cell Li-Po Battery
連接 3-Cell 鋰電池(11.1V)

Charger LED Status 充電器LED狀態說明:

Operational mode display 使用狀態顯示方式	via 3 LEDs
Power on 開啟電源時	Orange (1 second) / 橘燈（停留1秒）
Stand By 待機狀態	Green / 綠燈
Charging 充電中	Red / 紅燈
Full 完成充電	Green / 綠燈
Fault 失敗	Flashing / 快閃燈號

* Re-Plug the AC Plug and Battery if faults.
顯示失敗燈號時，請重新安插AC電源插頭及電池。

Caution 注意事項：

1. ONLY for 2-cell & 3-cell Li-Po battery.
2. Proceed with charging in a safe environment.
3. DO NOT charge while the battery is still warm.
4. DO NOT charge an expanded or damaged battery.
5. Keep the charger away from humidity.

1. 限用於2或3片式鋰電池組。
2. 請於安全環境中進行充電。
3. 電池仍處於發熱狀態時，請勿充電。
4. 電池發生膨脹或受損，請勿充電。
5. 請勿於潮濕環境中使用。

SPARE PARTS / 零件表

PV0048
BALL BEARING, d4xD8xW3(2)
軸承組, d4xD8xW3(2)

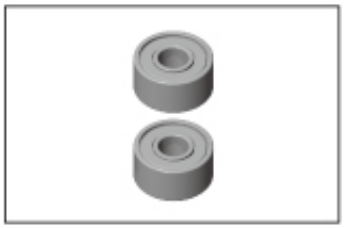

PV0049
BALL BEARING, d3xD8xW4(2)
軸承組, d3xD8xW4(2)

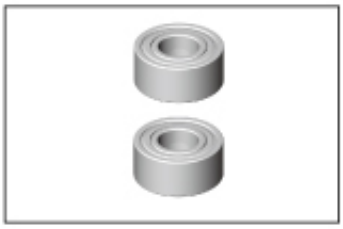

PV0059
BALL BEARING, d5xD11xW5(2)
軸承組, d5xD11xW5(2)

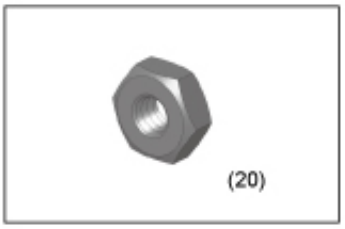

PV0234
NUT(20), M2
六角螺帽(20),M2

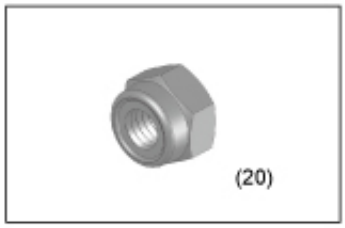

PV0236
LOCK NUT(20), M3
止鬆螺帽(20), M3

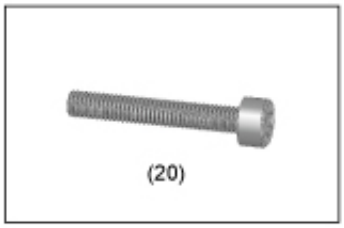

PV0257
SOCKET SCREW(20), M3x20
內六角螺絲, M3x20

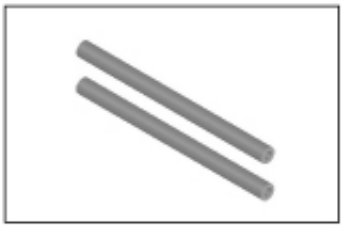

PV0707
FEATHERING SHAFT(2)
主旋翼固定軸(2)

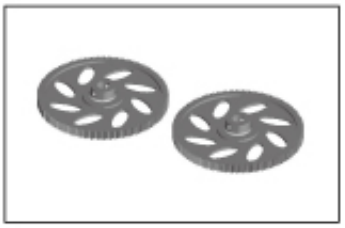

PV0722
AUTO-R TAIL DRIVE GEAR
尾驅動輪(124T)

PV0723
MAIN GEAR (W/BEARING)
主齒輪(含軸承)

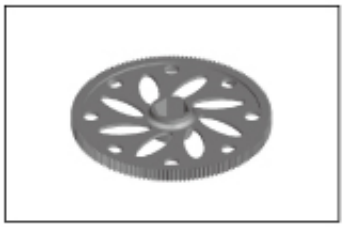

PV0724
MAIN GEAR ONLY 150T
主齒輪 150T

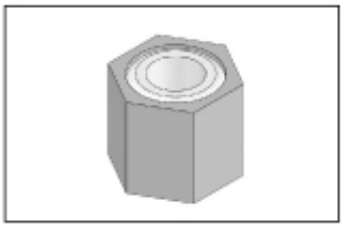

PV0725
M.G. HEX DRIVE HUB
主齒輪六角驅動套

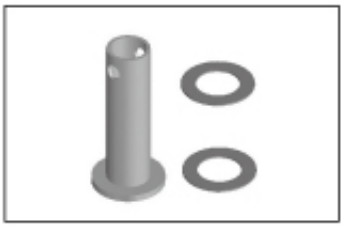

PV0726
ONE WAY SHAFT
單向輪套組

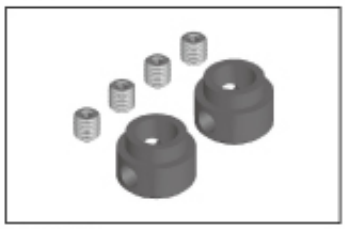

PV0727
M. SHAFT LOCK RING(2)
止擋圈(2)

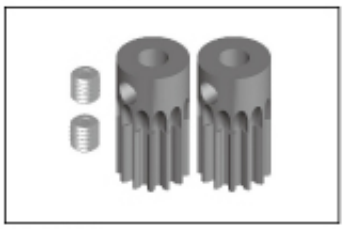

PV0729
PINION 13T
驅動齒輪 13T

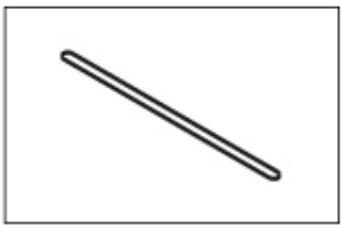

PV0735
TAIL DRIVE BELT, MXL413T
時規皮帶, MXL413T

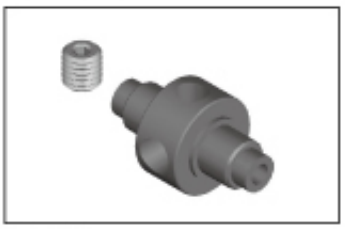

PV0741
TAIL ROTOR HUB
尾旋翼固定座

PV0742
TAIL ROTOR
尾旋翼組

PV0744
FLYBAR PADDLE
穩定翼

PV0746
SKID DAMPER
腳架墊圈

PV0747
TAIL SERVO TRAY
尾伺服機座

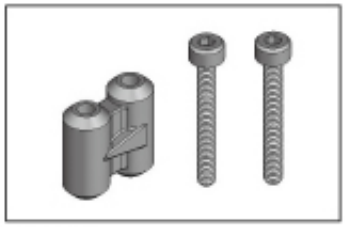

PV0748
DOUBLE JOINT LEVER
雙關連接桿

PV0751
TAIL SUPPORT BRACKET
尾支撐桿座

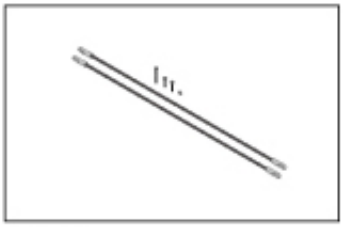

PV0752
TAIL SUPPORT
尾支撐桿組

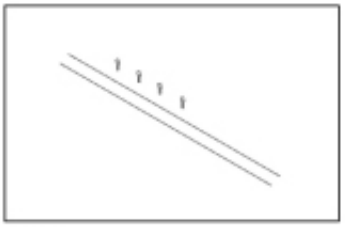

PV0753
TAIL LINKAGE ROD
尾拉桿組

E325 V2 SPARE PARTS / 零件表

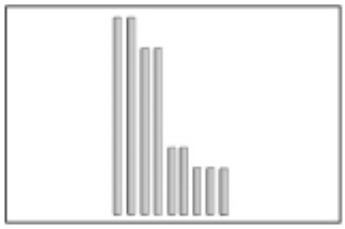

PV0754
LINKAGE ROD SET
連接桿組

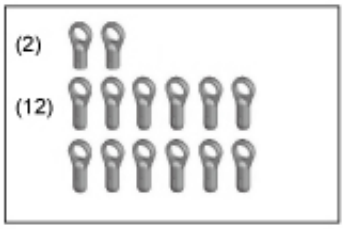

PV0755
BALL LINK、⌀3.8
單頭連接桿, ⌀3.8

PV0759
BLADE HOLDER
小型主旋翼固定架

PV0761
THREADLOCKING, T22
螺絲防鬆膠, T22

PV0762
TAIL ROD GUIDE
固定環

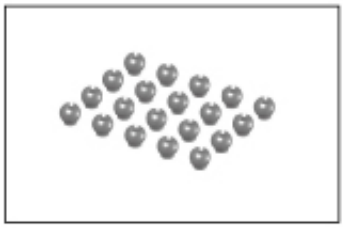

PV0763
LINKAGE BALL ⌀3.8(20)
連接頭 ⌀3.8(20)

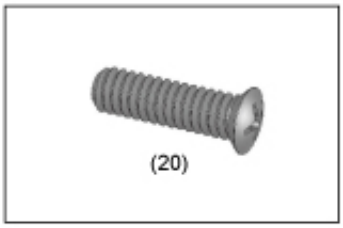

PV0764
COUNTER SCREW, M1.6x6(20)
圓頭十字螺絲, M1.6x6(20)

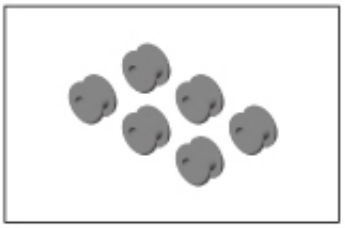

PV0765
CANOPY MOUNT RUBBER
機頭罩固定墊圈

PV0769
THRUST BEARING(2), d4xD9x4
止推軸承組, d4xD9xW4

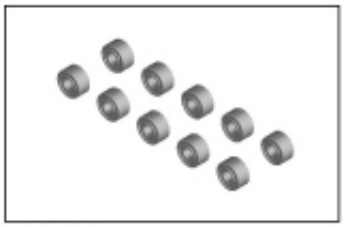

PV0770
BEARING(10), d2xD5x2.5t
滾珠軸承, d2xD5xW2.5

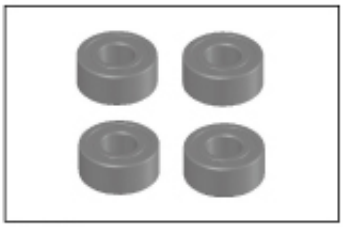

PV0771
BEARING(4), d4xD9x4t
滾珠軸承, d4xD9xW4

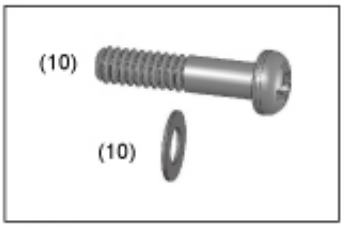

PV0774
SHOULDERED SCREW, M2x9
圓頭十字軸套螺絲, M2x9

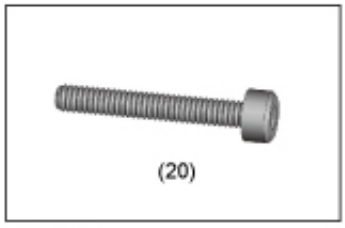

PV0775
SOCKET SCREW(20), M2x14
內六角螺絲, M2x14

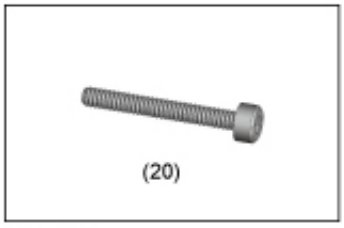

PV0776
SOCKET SCREW(20), M2x16
內六角螺絲, M2x16

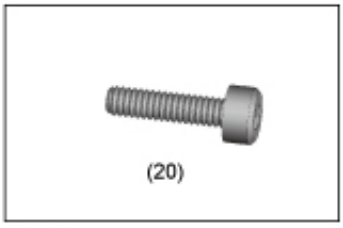

PV0777
SOCKET SCREW(20), M2x8
內六角螺絲, M2x8

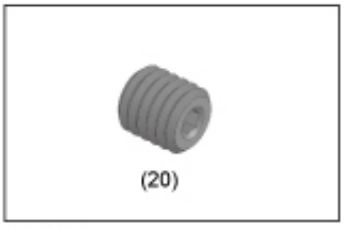

PV0780
SET SCREW(20),M3x3
無頭內六角螺絲, M3x3

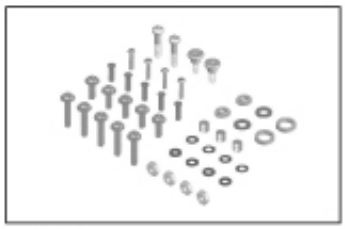

PV0781
SCREW BAG
螺絲包

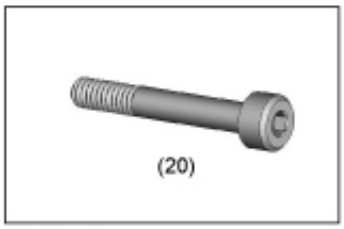

PV0785
SOCKET SCREW(20), M2x14
半牙內六角螺絲, M2x14

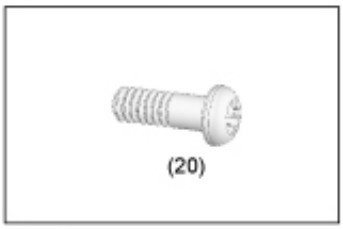

PV0786
SHOULDERED SCREW(20), M2x6
圓頭軸套螺絲(20), M2X6

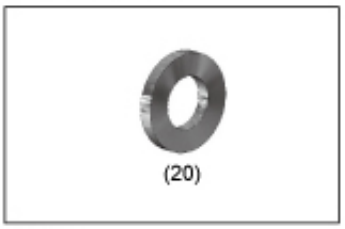

PV0787
FLAT WASHER(20), d2xD3.7x0.5t
墊片(20), d2xD3.7x0.5t

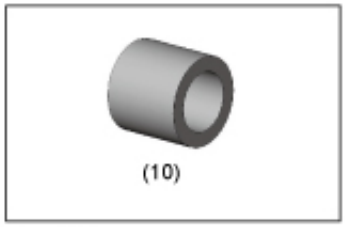

PV0788
COLLAR(10), d2xD3x2.5t
軸環(10), d2xD3x2.5t

PV0789
COLLAR(10), d2xD3x5.6t
軸環(10), d2xD3x5.6t

PV0801
METAL M. ROTOR HUB
金屬旋翼固定座組

PV0802
HARDENED MAIN SHAFT
高強度主軸

E325 V2 SPARE PARTS / 零件表

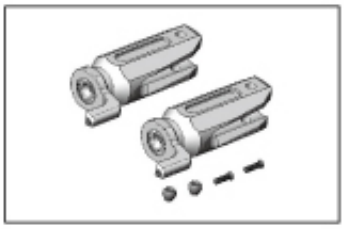

PV0803
METAL ROTOR GRIP
金屬旋翼轉座

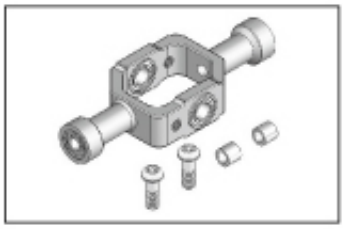

PV0804
METAL SEESAW HUB
金屬穩定桿固定座

PV0805
METAL MIXING LEVER
金屬控制搖臂

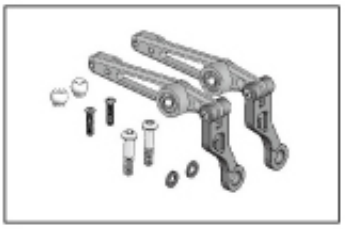

PV0807
M. FLYBAR C. LEVER
金屬穩定翼控制臂

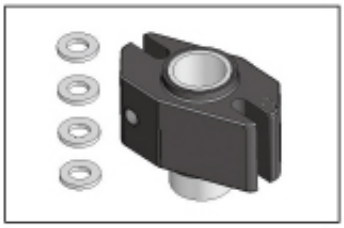

PV0808
METAL WASHOUT BASE
金屬控制臂座

PV0809
METAL SWASHPLATE
金屬十字盤組

PV0814
METAL PULLEY
金屬尾旋翼軸組

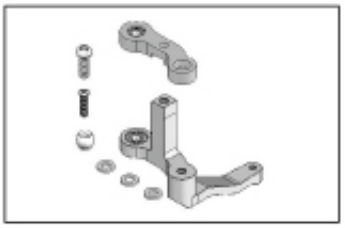

PV0818
M. T.PITCH LEVER
金屬尾旋翼控制桿組

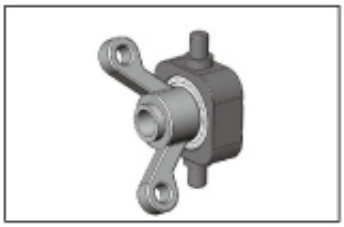

PV0820
M. TAIL P. Control Set
金屬尾旋翼控制組

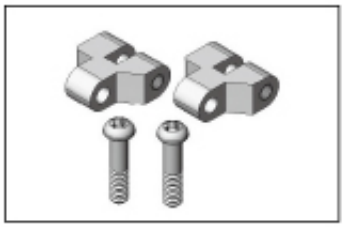

PV0821
M. T. PITCH LINK
金屬尾旋翼連接頭

PV0823
M. TAIL P. HOUSING
金屬尾旋翼轉座

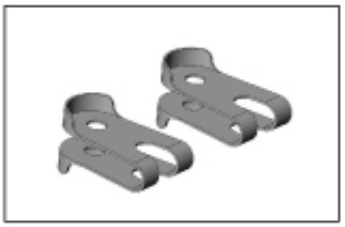

PV0829
ROTOR SPACER(FOR 5mm BLADE ROOT)
主旋翼墊片

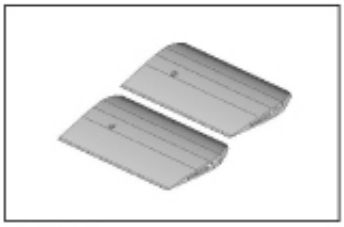

PV0837
3D FLYBAR PADDLE
3D穩定翼

PV0838
M. FLYBAR C. ARM
金屬穩定翼轉臂

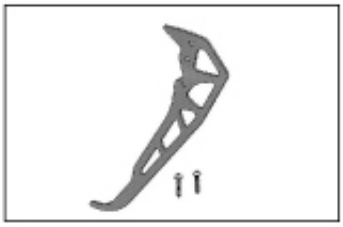

PV0842
3D CARBON TAIL FIN
3D碳纖維垂直安定面

PV0844
SUS FLYBAR ROD
不鏽鋼穩定桿

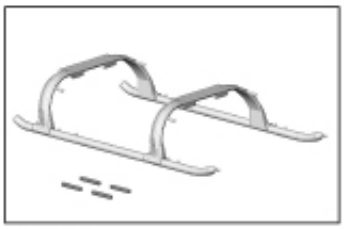

PV0903
LANDING SKID(BLACK)
腳架（黑色）

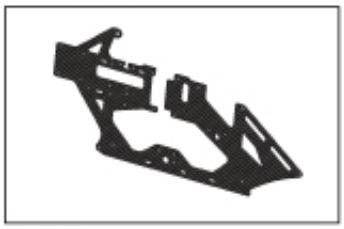

PV1223
CARBON MAIN FRAME
碳纖側板

PV1224
PHASING CONTROL & BRACKET SET
導軌夾扣零件組

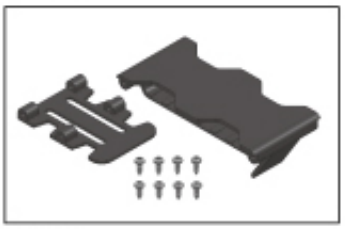

PV1225
BATTERY & RECEIVER TRAY SET
電裝固定座零件組

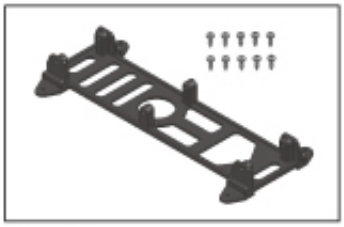

PV1226
BASE PLATE
機身底板

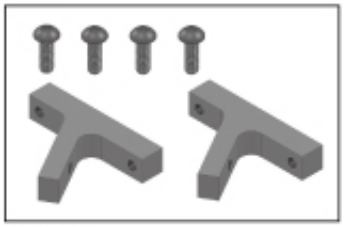

PV1227
FRONT SERVO TRAY SET
前伺服機座組

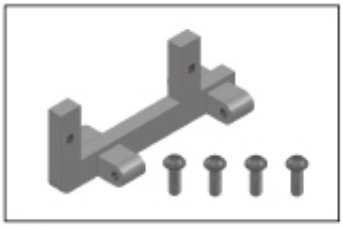

PV1228
REAR SERVO TRAY
後伺服機座

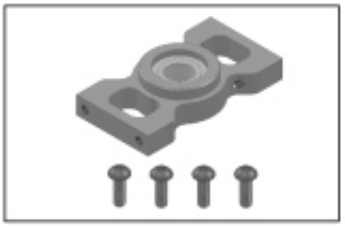

PV1229
UPPER BEARING BLOCK
下軸承座

SPARE PARTS / 零件表

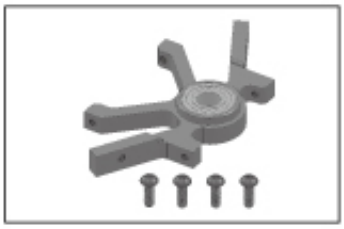

PV1230
LOWER BEARING BLOCK
上軸承座

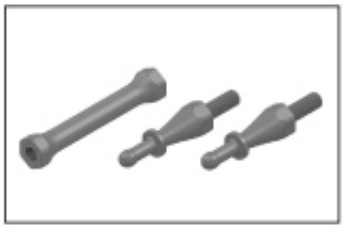

PV1231
CANOPY POST
機殼支柱

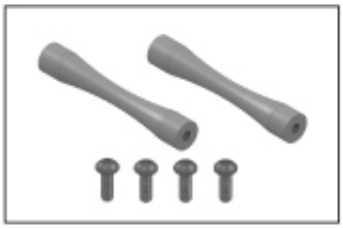

PV1232
FRAME SPACER
機身支柱

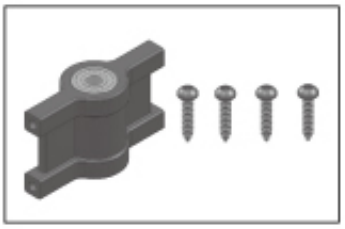

PV1233
TAIL BEARING FLANGE
尾傳動齒軸承座

PV1247
METAL PULLEY SET
金屬皮帶輪組

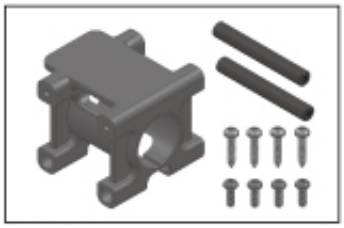

PV1234
TAIL BOOM BRACKET
尾管固定座

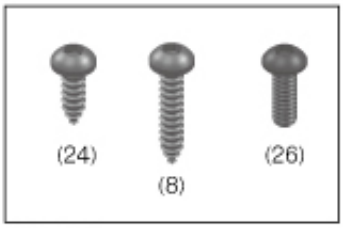

PV1235
BUTTON HEAD SOCKET SCREW SET
M2半圓頭螺絲組

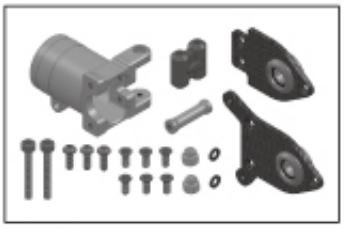

PV1236
METAL TAIL UNIT SET
金屬尾座組

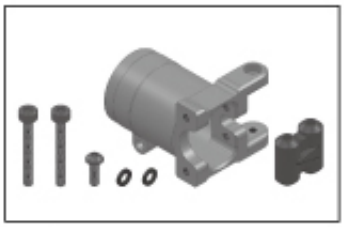

PV1237
METAL TAIL UNIT
金屬尾座

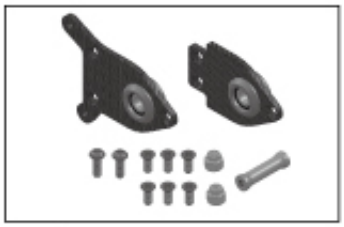

PV1238
METAL TAIL SIDE COVER SET
金屬尾座側蓋組

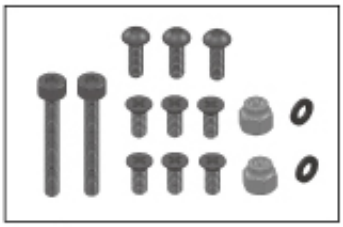

PV1239
SCREW PACK FOR TAIL UNIT
尾座螺絲組

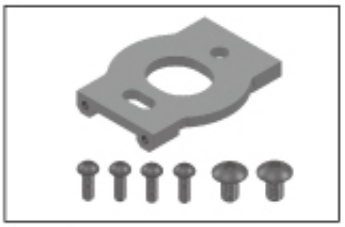

PV1240
MOTOR MOUNT
馬達座

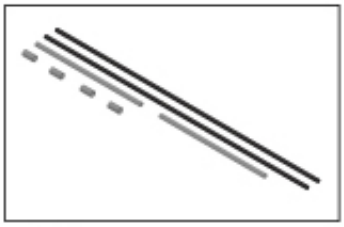

PV1241
ANTENNA TUBE SET
天線管組

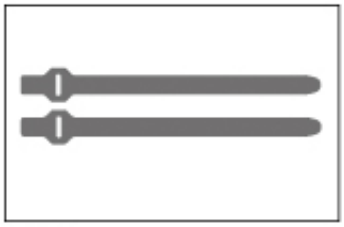

PV1242
VELCRO STRAPE
新式魔鬼粘束帶

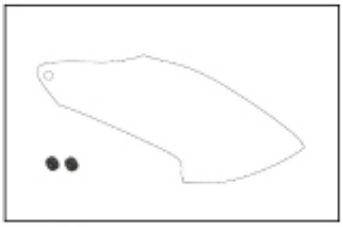

PV1244
FRP CANOPY(WITHE)
玻纖機殼

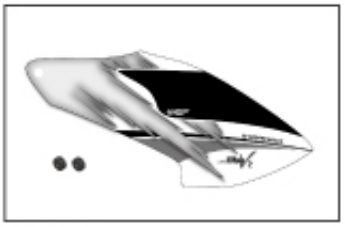

PV1244-Y
FRP CANOPY(YELLOW)
玻纖機殼(黃色)

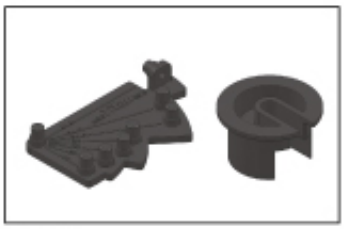

PV1245
LINKAGE METER & LEVEL TOOL SET
量測工具

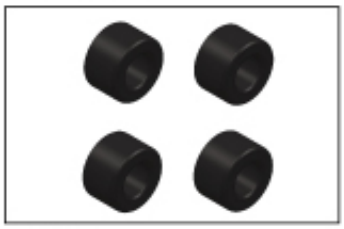

PV1246
DAMPER
避震墊圈

SPARE PARTS LIST / 維修零件包表格

Thunder Tiger

No.	Description	中文名稱	Part No.	Description	中文名稱	Qty	Index Page
PV0048	BALL BEARING Set	軸承組	HMV840ZZY	BALL BEARING, d4xD8xW3	滾珠軸承 d4xD8xW3	2	9
PV0049	BALL BEARING Set	軸承組	HMV830ZZY	BALL BEARING, d3xD8xW4	滾珠軸承 d3xD8xW4	2	9
PV0059	BALL BEARING Set	軸承組	HMV1150ZZSY	BALL BEARING, d5xD11xW5	滾珠軸承 d5xD11xW5	2	
PV0234	Nut Set	六角螺帽組	HML2	Nut, M2	六角螺帽 M2	20	
PV0236	Lock Nut Set	止鬆螺帽組	HMM3Z	Lock Nut, M3	止鬆螺帽 M3	20	
PV0257	Socket Screw Set	內六角螺絲組	HMC-20B	SOCKET SCREW, M3x20	內六角螺絲 M3x20	20	32
PV0707	Feathering Shaft	固定軸	BK0906	Feathering Shaft	固定軸	2	9
PV0722	Autorotation Tail Drive Gear	尾驅動輪,124T	BK0933	Autorotation Tail Drive Gear, 124T	尾驅動輪 124T	2	16
PV0723	MAIN GEAR (W/BEARING)	主齒輪(含軸承)	BV0934	MAIN GEAR (W/BEARING)	主齒輪(含軸承)	1	16
PV0724	Main Gear Only	主齒輪	BK0934	MAIN GEAR	主齒輪	1	16
PV0725	Metal Gear Hex Drive Hub	主齒輪六角驅動套	BV0935	Hex Drive Hub Set	主齒輪六角內管組	1	16
PV0726	ONE WAY SHAFT Set	單向軸套組	BK0930	ONE WAY SHAFT	單向軸套組	1	16
			BK0931	One Way Shaft Washer	單向軸套墊圈	2	16
PV0727	Metal Shaft Lock Ring Set	止擋環組	BK1020	Metal Shaft Lock Ring	止擋環	2	11, 17
			HME3-3B	Set Screw, M3x3	無頭內六角螺絲 M3x3	2	11, 17
PV0729	Pinion Set	驅動齒輪組	BK1009	Drive Gear, 13T	驅動齒輪 13T	2	27
			HME3-3B	Set Screw, M3x3	無頭內六角螺絲 M3x3	2	27
PV0735	Tail Drive Belt	皮帶	BK1073	Belt, MXL-3t 413T	皮帶MXL-3t 413T	1	18
PV0741	Tail Rotor Hub Set	尾旋翼固定座組	BK0972	Tail Rotor Hub	尾旋翼固定座	1	20
			HME3-3B	Set Screw, M3x3	無頭內六角螺絲 M3x3	1	20
PV0742	Tail Rotor Set	尾旋翼組	BK0961	Tail Rotor Blade	尾旋翼	2	20
PV0746	SKID DAMPER Set	腳架墊圈組	BK1038	SKID DAMPER	腳架墊圈	4	17
PV0747	TAIL SERVO TRAY Set	尾伺服機座組	BK0923	TAIL SERVO TRAY	尾伺服機座	2	24
			HNN2-10B	Tapping Screw w/Washer	墊圈自攻螺絲	2	24
PV0748	DOUBLE JOINT LEVER Set	雙關結連桿組	BK1091	DOUBLE JOINT LEVER	雙關結連桿	1	19
			HMC2-16B	SoCKET SCREW, M2x16	內六角螺絲 M2x16	2	19
PV0751	Tail Support Bracket Set	尾支撐桿座組	BK1026	Tail Support Bracket	尾支撐桿座	1	29
			HMC2-16B	Socket Screw, M2x16	內六角螺絲 M2x16	1	29
PV0752	Tail Support Rod Set	尾支撐桿組	BK1025	Tail Support Rod End	尾支撐桿接頭	2	29
			BK1027	Rod, φ3x255mm	碳纖棒 φ3x255mm	2	29
			HMC2-16B	Socket Screw, M2x16	內六角螺絲 M2x16	1	29
			HNN2-10B	Tapping Screw w/Washer	墊圈自攻螺絲	2	29
PV0753	Tail Linkage Rod Set	尾拉桿組	BK0922	Ball Link, D3.8x1.3mm	單頭連接桿 D3.8x1.3mm	4	29
			BK1071	Tail Linkage Rod, φ1.3	尾拉桿 φ1.3	2	29
PV0754	Linkage Rod Set	連接桿組	BK0163	Linkage Rod, D1.3x7mm	連接桿 D1.3x7mm	3	12
			BK1064	Linkage Rod, D1.3x10mm	連接桿 D1.3x10mm	2	12
			BK1065	Linkage Rod, D1.3x29mm	連接桿 D1.3x29mm	2	12
			BK1066	Linkage Rod, D1.3x24.5mm	連接桿 D1.3x24.5mm	2	12
PV0755	Ball Link Set	單頭連接桿組	BK0922	Ball Link, D3.8x12mm	單頭連接桿 D3.8x12mm	12	12
			BK0932	Ball Link, D3.8x10mm	單頭連接桿 D3.8x10mm	2	12
PV0759	Blade Holder	小型主旋翼固定架	BK1043	Blade Holder	小型主旋翼固定架	1	*
PV0762	TAIL ROD GUIDE Set	固定環組	BK1082	Rod Guide	固定環	2	24
			HMJ12-6B	Tapping Screw, M1.2x6	自攻螺絲 M1.2x6	2	24
PV0763	Link Ball Set	連接頭組	BK1203	Link Ball, φ3.8	連接頭φ3.8	20	8, 10, 11
PV0764	Counter Screw Set	圓頭十字螺絲組	HSP16-6N	Counter Screw, M1.6x6	圓頭十字螺絲 M1.6x6	20	7, 8, 9, 11
PV0765	Canopy Mount Rubber	機頭罩固定墊圈	BK1002	SILICON GROMMER	固定墊圈	6	31
PV0769	THRUST BEARING Set	止推軸承組	HMX0409Y	THRUST BEARING, d4xD9xW4	止推軸承 d4xD9xW4	2	9
PV0770	BALL BEARING Set	軸承組	HMV520ZZY	BALL BEARING, d2xD5xW2.5	滾珠軸承 d2xD5xW2.5	10	*
PV0775	Socket Screw Set	內六角螺絲組	HMC-14B	Socket Screw, M2x14	內六角螺絲 M2x14	20	17, 29
PV0776	Socket Screw Set	內六角螺絲組	HMC-16B	Socket Screw, M2x16	內六角螺絲 M2x16	20	19

SPARE PARTS LIST / 維修零件包表格

Thunder Tiger

No.	Description	中文名稱	Part No.	Description	中文名稱	Qty	Index Page
PV0777	Socket Screw Set	內六角螺絲組	HMC-8B	Socket Screw, M2x8	內六角螺絲 M2x8	20	20, 28
PV0780	Set Screw Set	無頭內六角螺絲組	HME3-3B	Set Screw, M3x3	無頭內六角螺絲 M3x3	20	
PV0781	Screw Pack	螺絲包	BK0919	Washer, d2xD3.8X0.5t	墊片 d2xD3.8X0.5t	4	*
			BK0920	Washer, d2xD3.8X0.2t	墊片 d2xD3.8X0.2t	4	*
			BK1079	Collar, d4xD7	軸環 d4xD7	2	*
			BK1080	Washer	墊圈	2	*
			HME3-3B	Set Screw, M3x3	無頭內六角螺絲 M3x3	3	
			HMJ12-6B	Tapping Screw, M1.2x6	自攻螺絲 M1.2x6	4	
			HML2	Nut, M2	六角螺帽 M2	4	
			HMO26	Washer	墊片	2	
			HNN2-10B	Tapping Screw w/Washer	墊圈自攻螺絲	5	
			HNN2-6B	Tapping Screw w/Washer	墊圈自攻螺絲	5	
			HNU2-9Z	Shouldered Screw, M2x9	圓頭十字軸套螺絲 M2x9	2	
			HNV2-6Z	Flat Shouldered Screw, M2x9	扁頭十字軸套螺絲 M2x9	2	
			HSP16-6N	Counter Screw, M1.6x6	圓頭十字螺絲 M1.6x6	5	
PV0785	Socket Screw Set	半牙內六角螺絲組	BK1086	SOCKET SCREW(S), M2x14	半牙內六角螺絲 M2x14	20	10
PV0786	Shouldered Screw Set	圓頭軸套螺絲組	HNU2-6Z	Shouldered Screw, M2x6	圓頭十字軸套螺絲 M2x6	20	6
PV0787	Washer Pack	墊片包	BK1481	Washer, d2xD3.7X0.5t	墊片 d2xD3.7X0.5t	20	7, 11, 19
PV0788	Collar Pack	軸環包	BK1456	Collar, d2xD3x2.7t	軸環 d2xD3x2.7t	10	6
PV0789	Collar Pack	軸環包	BK1480	Collar, d2xD3x5.6t	軸環 d2xD3x5.6t	10	7
PV0801	Metal Main Rotor Hub	金屬旋翼固定座組	BK0918	Washer, d4xD7.8X0.1mm	墊片 d4xD7.8X0.1mm	6	*
			BK1054	Damper, 70	避震墊圈 70	2	*
			BK1086	Socket Screw, M2x14	半牙內六角螺絲 M2x14	1	10
			BV1408	Metal Main Rotor Hub Set	金屬主旋翼固定座組	1	6
			HML2	Nut, M2	六角螺帽, M2	1	10
PV0802	Hardened Main Shaft Pack	高強度主軸包	BK1086	Socket Screw, M2x14	半牙內六角螺絲 M2x14	2	10
			BK1502	Hardened Main Shaft	高強度主軸	2	10
			HML2	Nut, M2	六角螺帽 M2	4	10
PV0803	Metal Rotor Grip Set	金屬旋翼轉座組	BK1203	Link Ball, φ3.8	連接頭	2	9
			BV1402	Metal Rotor Grip	金屬主旋翼固定座	2	9
			HSP16-6N	Counter Screw, M1.6x6	圓頭十字螺絲 M1.6x6	2	9
PV0804	Metal Seesaw Hub Set	金屬穩定桿固定座組	BK1456	Collar, d2xD3x2.7t	軸環 d2xD3x2.7t	2	6
			BV1403	Metal Seesaw Hub	金屬穩定桿固定座	1	6
			HNU2-6Z	Shouldered Screw, M2x6	圓頭十字軸套螺絲 M2x6	2	6
PV0805	Metal Mixing Lever Set	金屬控制搖臂組	BK1203	Link Ball, φ3.8	連接頭φ3.8	4	11
			BK1480	Collar, d2xD3x5.6t	軸環 d2xD3x5.6t	2	11
			BK1481	Flat Washer, d2x3.7x0.5t	墊片 d2x3.7x0.5t	2	11
			BV1404	Metal Mixing Lever	金屬控制搖臂	2	11
			HNU2-9Z	Shouldered Screw, M2x9	圓頭十字軸套螺絲 M2x9	2	11
			HSP16-6N	Counter Screw, M1.6x6	圓頭十字螺絲 M1.6x6	4	11
PV0807	Metal Flybar Control Lever Set	金屬穩定翼控制臂組	BV1406	Metal Flybar Control Lever	金屬穩定翼控制臂	2	11
			BK1203	Link Ball, φ3.8	連接頭φ3.8	2	11
			BK1480	Collar, d2xD3x5.6t	軸環 d2xD3x5.6t	2	11
			BK1481	Washer, d2xD3.7X0.5t	墊片 d2xD3.7X0.5t	2	11
			HNU2-9Z	Shouldered Screw, M2x9	圓頭十字軸套螺絲 M2x9	2	11
			HSP16-6N	Counter Screw, M1.6x6	圓頭十字螺絲 M1.6x6	2	11
PV0808	Metal Washout Base Set	金屬控制臂座組	BV1405	Metal Washout Base	金屬控制臂座	1	11
			BK1481	Washer, d2xD3.7X0.5t	墊片 d2xD3.7X0.5t	4	11
PV0809	Metal Swashplate	金屬十字盤	BV1419A	Metal Swashplate	金屬十字盤	1	11
PV0814	Metal Pulley Set	金屬尾旋翼軸組	BV0973A	Metal Tail Rotor Shaft Set	金屬尾旋翼軸組	1	17

SPARE PARTS LIST / 維修零件包表格

Thunder Tiger

No.	Description	中文名稱	Part No.	Description	中文名稱	Qty	Index Page
PV0818	Metal Pitch Lever Set	金屬尾旋翼控制桿組	BV1422	Metal Pitch Lever-1	金屬尾旋翼控制桿-1	1	18
			BV1423	Metal Pitch Lever-2	金屬尾旋翼控制桿-2	1	18
			BK1203	Link Ball, φ3.8	連接頭φ3.8	1	18
			BK1481	Washer, d2xD3.7X0.5t	墊片 d2xD3.7X0.5t	3	18
			HMF2-6N	Countersunk Screw, M2x6	圓頭十字螺絲 M2x6	1	18
			HSP16-6N	Counter Screw, M1.6x6	圓頭十字螺絲 M1.6x6	1	18
PV0820	Metal Tail Pitch Control Set	金屬尾旋翼控制組	BV1421A	Metal Tail Pitch Control Set	金屬尾旋翼攻角控制組	1	18
PV0821	Metal Tail Pitch Link Set	金屬尾旋翼連接頭	BK1425	Metal Tail Pitch Link	金屬尾旋翼連接	2	19
			HNU2-9Z	Shouldered Screw, M2x9	圓頭十字軸套螺絲 M2x9	2	19
PV0823	Metal Tail Pitch Housing Set	金屬尾旋翼轉座組	BK1425	Metal Tail Pitch Housing	金屬尾旋翼轉座	2	19
			HNU2-9Z	Shouldered Screw, M2x9	圓頭十字軸套螺絲 M2x9	2	19
PV0829	Rotor Spacer	主旋翼墊片	BK1442	Rotor Spacer	主旋翼墊片	2	28
PV0837	3D Flyabare Paddle Set	3D版穩定翼組	BK1413	3D Flyabare Paddle (Green)	3D版穩定翼（綠色）	2	8
PV0838	Metal Flyaber Control Arm Set	金屬穩定翼轉座組	BK1203	Link Ball, φ3.8	連接頭φ3.8	2	8
			BK1499	Metal Flyabar Control Arm-1	金屬穩定翼轉座-1	2	8
			BK1500	Metal Flyabar Control Arm-2	金屬穩定翼轉座-2	2	8
			HME3-3B	Set Screw, M3x3	無頭內六角螺絲 M3x3	2	8
			HSP16-6N	Counter Screw, M1.6x6	圓頭十字螺絲 M1.6x6	2	8
PV0842	3D Carbon Tail Fin Set	3D碳纖維垂直安定面組	BK1501	3D Carbon Tail Fin	3D碳纖維垂直安定面	1	20
			HNN2-10B	Tapping Screw w/Washer	墊圈自攻螺絲	2	20
PV0844	SUS Flyabar Rod	不鏽鋼穩定桿	BK1410-1	SUS Flyabar Rod	不鏽鋼穩定桿	2	8
PV0903	Landing Skid Set	腳架組	BK1473	Landing Skid	腳架	1	16
			BK1615	Landing Skid Damper	腳架墊圈	4	16
PV1223	Carbon Main Frame	碳纖側板	BK1892	Carbon Main Frame	碳纖側板	2	13
PV1224	Phasing Control & Bracket Set	導軌夾扣零件組	BK2601	Anti-rotation Bracket	十字盤相位導軌	1	14
			BK2602	Antenna Holder	天線管座	1	16
			BK2603	Canopy Clip	機殼固定夾	1	16
			HNX2-6B	Socket Button Head Self Tapping Screw, M2×6	半圓頭內六角自攻螺絲 M2×6	6	14
PV1225	Battery & Receiver Tray Set	電裝固定座零件組	BK2604	Battery Tray	電池板	1	26
			BK2605	Receiver Tray	接收機座	1	14,26
			HNX2-6B	Socket Button Head Self Tapping Screw, M2×6	半圓頭內六角自攻螺絲 M2×6	8	14
PV1226	Base Plate	機身底板	BK2606	Bottom Bracket	機身底板	1	14
			HNX2-6B	Socket Button Head Self Tapping Screw, M2×6	半圓頭內六角自攻螺絲 M2×6	10	13
PV1227	Front Servo Tray Set	前伺服機座組	BK1878	Front Servo Tray	前伺服機座	2	13
			HSA2-6	Button Head Socket Screw, M2x6	半圓頭內六角螺絲 M2x6	4	13
PV1228	Rear Servo Tray	後伺服機座	BK1881	Rare Servo Tray	後伺服機座	1	13
			HSA2-6	Button Head Socket Screw, M2x6	半圓頭內六角螺絲 M2x6	4	13
PV1229	Upper Bearing Block	下軸承座	BV1883	Lower Bearing Set	下軸承座組	1	13
			HSA2-6	Button Head Socket Screw, M2x6	半圓頭內六角螺絲 M2x6	4	13
PV1230	Lower Bearing Block	上軸承座	BV1882	Upper Bearing Set	上軸承座組	1	13
			HSA2-6	Button Head Socket Screw, M2x6	半圓頭內六角螺絲 M2x6	4	13
PV1231	Canopy Post	機殼支柱	BK1887	Standoff Spacer	定位柱	1	14
			BK1888	Canopy Standoff	機殼支柱	2	14
PV1232	Frame Spacer	機身支柱	BK1889	Frame Spacer	機身支柱	2	25
			HSA2-6	Button Head Socket Screw, M2x6	半圓頭內六角螺絲 M2x6	4	25
PV1233	Tail Bearing Flange	尾傳動齒軸承座	BV2609	Tail Bearing Flange Set	尾傳動齒軸承座組	1	13
			HNX2-10B	Socket Button Head Self Tapping Screw, M2×10	半圓頭內六角自攻螺絲 M2×10	4	13
PV1234	Tail Boom Bracket	尾管固定座,	BK2610	Tail Boom BRACKET	尾管固定座	1	21
			BK1886	Bracket Spacer	固定座支柱	2	25
			HSA2-6	Button Head Socket Screw, M2x6	半圓頭內六角螺絲 M2x6	4	25

SPARE PARTS LIST / 維修零件包表格

Thunder Tiger

No.	Description	中文名稱	Part No.	Description	中文名稱	Qty	Index Page
			HNX2-10B	Socket Button Head Self Tapping Screw, M2×10	半圓頭內六角自攻螺絲 M2×10	4	25
PV1235	Button Head Socket Screw Set	M2半圓頭螺絲組	HSA2-6	Button Head Socket Screw, M2x6	半圓頭內六角螺絲 M2x6	26	*
			HNX2-6B	Socket Button Head Self Tapping Screw, M2×6	半圓頭內六角自攻螺絲 M2×6	24	*
			HNX2-10B	Socket Button Head Self Tapping Screw, M2×10	半圓頭內六角自攻螺絲 M2×10	8	*
PV1236	Metal Tail Unit Set	金屬尾座組	BK1872	Metal Tail Unit	金屬尾座	1	17
			BV1873	Metal Tail Side Cover- R	金屬尾座側蓋-R	1	17
			BV1874	Metal Tail Side Cover- L	金屬尾座側蓋-L	1	17
			BK1875	Tail Unit Spacer	尾座支柱	1	17
			BK1091	Double Joint Lever	雙關連接桿	1	18
			HMD2-5	Flat Head Phillips Screw, M2x5	平頭十字螺絲 M2x5	6	17
			HSA2-6	Button Head Socket Screw, M2x6	半圓頭內六角螺絲 M2x6	3	20
			HMC2-16B	Socket Screw, M2×16	內六角螺絲 M2×16	2	18
			HMM2Z	LUCK NUT, M2	M2止鬆螺帽	2	20
			BK1481	FLAT WASHER, d2xD3.7x0.5t	墊片 d2xD3.7x0.5t	2	19
PV1237	Metal Tail Unit	金屬尾座	BK1872	Metal Tail Unit	金屬尾座	1	17
			BK1091	Double Joint Lever	雙關連接桿	1	18
			HSA2-6	Button Head Socket Screw, M2x6	半圓頭內六角螺絲 M2x6	1	20
			HMC2-16B	Socket Screw, M2×16	內六角螺絲 M2×16	2	18
			BK1481	FLAT WASHER, d2xD3.7x0.5t	墊片 d2xD3.7x0.5t	2	19
PV1238	Metal Tail Side Cover Set	金屬尾座側蓋組	BV1873	Metal Tail Side Cover- R	金屬尾座側蓋-R	1	17
			BV1874	Metal Tail Side Cover- L	金屬尾座側蓋-L	1	17
			BK1875	Tail Unit Spacer	尾座支柱	1	17
			HMD2-5	Flat Head Phillips Screw, M2x5	平頭十字螺絲 M2x5	6	17
			HSA2-6	Button Head Socket Screw, M2x6	半圓頭內六角螺絲, M2x6	2	20
			HMM2Z	LUCK NUT, M2	止鬆螺帽	2	20
PV1239	Screw Pack for Tail Unit	尾座螺絲組	HMD2-5	Flat Head Phillips Screw, M2x5	平頭十字螺絲M2x5	6	17
			HSA2-6	Button Head Socket Screw, M2x6	半圓頭內六角螺絲, M2x6	3	20
			HMC2-16B	Socket Screw M2×16	內六角螺絲M2×16	2	18
			HMM2Z	LUCK NUT, M2	止鬆螺帽	2	20
			BK1481	FLAT WASHER d2xD3.7x0.5t	墊片d2xD3.7x0.5t	2	18
PV1240	Motor Mount	馬達座	BK1890	Motor Mount	馬達座	1	23
			HSA3-5B	Socket Screw M3×5	半圓頭內六角螺絲M3×5	2	23
			HSA2-6	Button Head Socket Screw, M2x6	半圓頭內六角螺絲, M2x6	4	23
PV1241	Antenna Tube Set	天線管組	BD1826-B1	Antenna Tube	天線管(黑色)	2	26
			BK1088	Rubber Tube 10mm	軟管10mm	4	26
			BK1885	Oil Tube, 100mm	耐熱油管100mm	2	26
PV1242	Velcro Strape	新式魔鬼粘束帶	BK1884	Velcro Strape	新式魔鬼粘束帶	4	27
PV1244	FRP Canopy(WITHE)	玻纖機殼(白殼)	BV2607	Caonpy(WITHE)	機身(白殼)	1	27
			BK1002	Rubber Grommet	機身固定墊圈	2	27
PV1244-Y	FRP Canopy(YELLOW)	玻纖機殼(黃色)	BV2607-Y	Caonpy(YELLOW)	機身(黃色)	1	27
			BK1002	Rubber Grommet	機身固定墊圈	2	27
PV1245	Linkage Meter & Level Tool Set	量測工具	BK2608	Swash Level Tool	十字盤定位器	1	*
			BK2611	Linkage Meter	連桿檢測器	1	*
PV1246	Damper	避震墊圈	BK1900	FLAP DAMPER, 65	避震墊圈 65	4	9
PV1247	Metal Pulley Set	金屬皮帶輪組	BV1412	METAL Pulley Set (14T)	金屬皮帶輪組 (14T)	1	13
			BK1445	Tail gear, 28T	金屬尾驅動齒 28T	1	13
			HMY1-5	Pin, φ1×5.3	插銷 φ1×5.3L	1	13
			HMD2-6	Flat Head Phillips Screw, M2x6	平頭十字螺絲 M2x6	1	13

OPTION PARTS / 選配零件

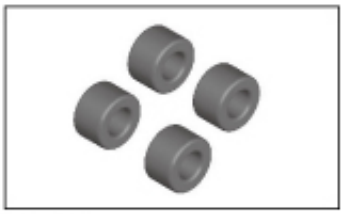

PV0706
FLAP DAMPER(70°)
避震墊圈(70°)

PV0730
PINION 10T(2)(FOR 2.3mm SHAFT)
驅動齒輪 10T

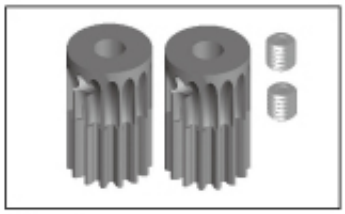

PV0731
PINION 15T
驅動齒輪 15T

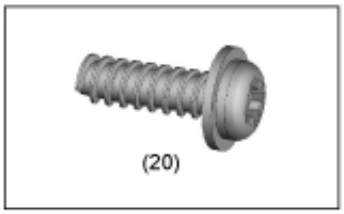

PV0772
TAPPING SCREW (W/WASHER), M2x6
圓頭墊圈自攻螺絲, M2x6

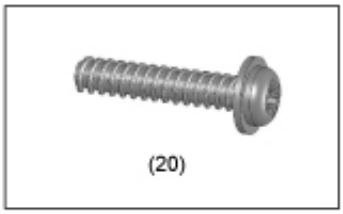

PV0773
TAPPING SCREW (W/WASHER), M2x10
圓頭墊圈自攻螺絲, M2x10

PV0828
SETTING WEIGHT
重錘

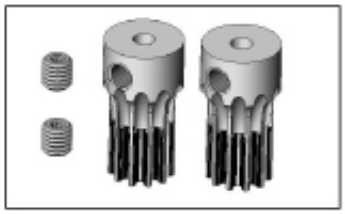

PV0830
PINION 11T (d2.3)
驅動齒輪11T (d2.3)

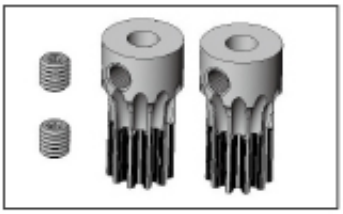

PV0831
PINION 11T (d3.17)
驅動齒輪 11T(d3.17)

PV0832
PINION 12T
驅動齒輪 12T

PV0833
PINION 14T
驅動齒輪 14T

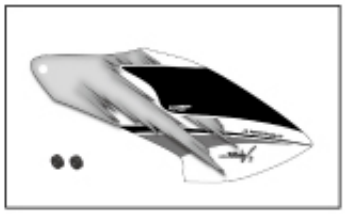

PV1244-G
FRP CANOPY(GREEN)
玻纖機殼(綠色)

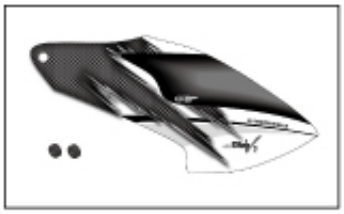

PV1244-C
FRP CANOPY(CORBON)
玻纖機殼(碳纖)

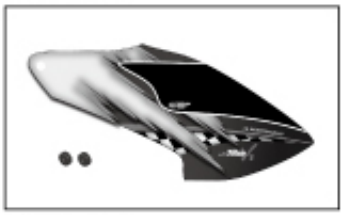

PV1244-LY
FRP CANOPY(BLUE/YELLOW)
玻纖機殼(藍/黃)

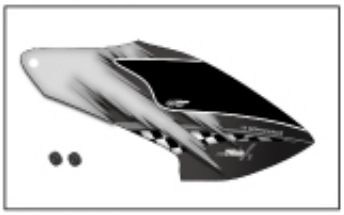

PV1244-LG
FRP CANOPY(BLUE/GREEN)
玻纖機殼(藍/綠)

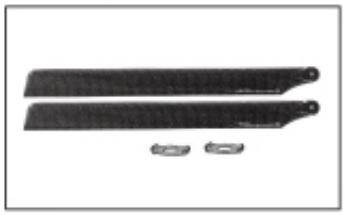

3874
CARBON ROTOR BLADE,325mm
碳纖主旋翼組, 325mm

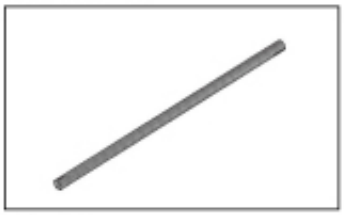

PV0825
CARBON TAIL BOOM
碳纖維尾管

POWER & ELECTRONICS / 動力及電子配件

2381
BL. MOTOR, OBL 29/37-10H
無刷馬達, OBL 29/37-10H

2532
Li-Po BATTERY E-CHARGER ELC 4
鋰電池充電器 ELC 4

2808
LI-PO BATT,3S1P/2200mAh/20C
鋰電池, 3S1P/2200mAh/20C

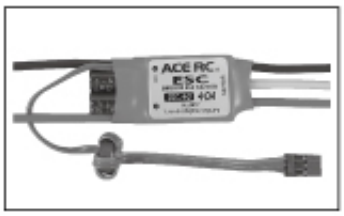

8041-H
SPEED CONTROL, ACE BLC-40
無刷速控器, ACE BLC-40

8070
TG7000 HEADING LOCK GYRO
TG7000 鎖定式電子陀螺儀

8073
TG6000GYRO W/C0915 SERVO
TG6000 陀螺儀+尾舵伺服機

8117
ACE MICRO SERVO , C1016
迷你伺服機, C1016

8131
ACE MICRO SERVO , C0915
迷你尾舵伺服機, C0915

POWER & ELECTRONICS / 動力及電子配件

8139
ACE MICRO SERVO , C1016MG
迷你尾舵伺服機, C1016MG

AQ0843
TG-6100M GYRO W/E-CCPM MIXER
TG-6100M 陀螺儀含混控版

AQ0835
ANTI-INTERFERENCE RING
防磁環

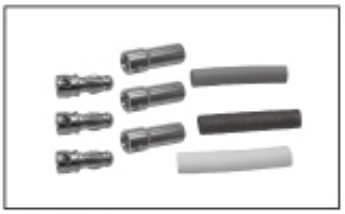

AQ0836
GOLD CONNECTORS(3.5mm)
鍍金端子(3.5mm)

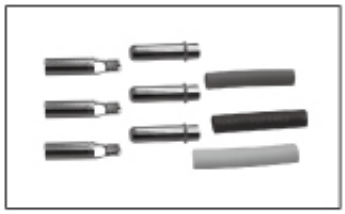

AQ0837
GOLD CONNECTORS(4mm)
鍍金端子(4mm)

ACCESSORY / 其他相關產品

PV0760
ANAEROBICS RETAINER, R48
缺氧膠, R48

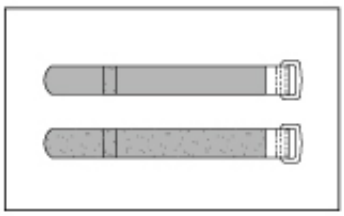

PV0835
VELCRO
束帶

1075
BALL LINK PLIERS(D3.8mm)
連桿專用鉗（D3.8mm）

1076
BALL LINK WRENCH
單頭連桿鈑手

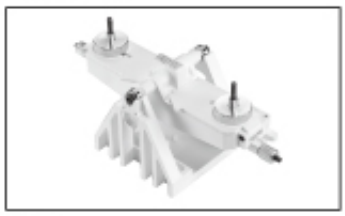

1077
BLADE BALANCER
主旋翼平衡器

1078
PITCH GAUGE
螺距尺

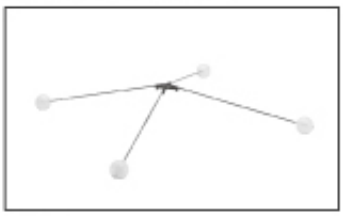

1079
TRAINING GEAR
練習架

1080
ONE WAY BEARING RELEASER
單向軸承退出器

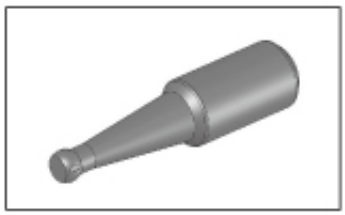

1198
BALL LINK REAMER
球頭絞刀 (3.8mm)

1387
POPL-SHIRT(WHITE) SIZE:XS~2XL
POPL衫(白色) SIZE:XS~2XL

1388
T-SHIRT(BLACK) SIZE:XS~2XL
T恤(黑色) SIZE:XS~2XL

SPECIFICATION / 規格表

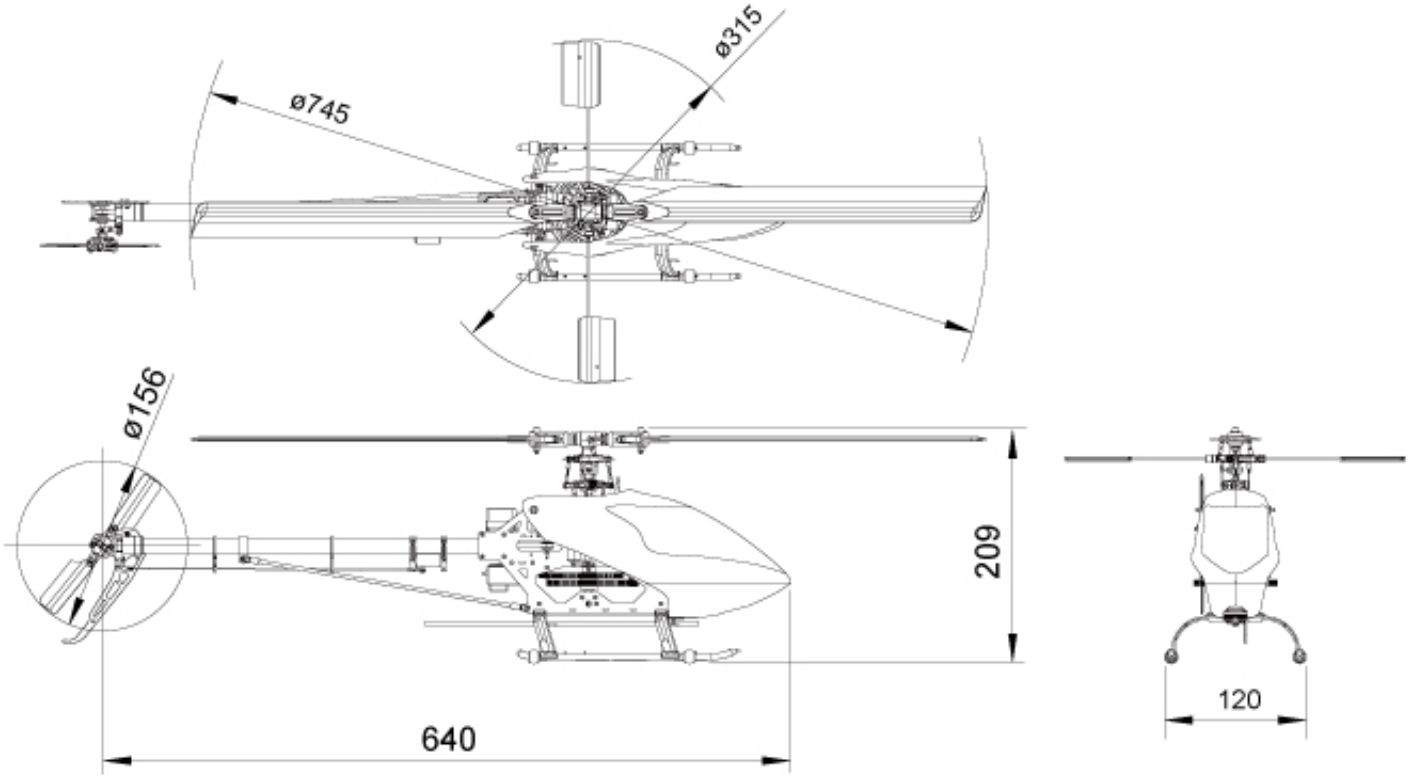

Length / 全長: 640 mm (25.19 in)
Height / 總高度: 209mm (8.2 in)
Width / 全寬: 120mm (4.72 in)
Main rotor disc diameter / 主旋翼旋轉直徑: 745mm (28.46 in)
Tail rotor disc diameter / 尾旋翼旋轉直徑: 156mm (6.14 in)
Motor drive gear / 馬達驅動齒: 13T
Main gear / 主齒盤: 150T
Tail grive gear / 尾驅動齒盤: 124
Tail pulley / 尾傳動齒: 14T
Gear Ratio / 齒輪傳動比: 1:11.5:4.4
Weight (w/o battery) / 全配重量 (不含電池): approx. 625g (22.04oz)

FEATURES / 特色

1. Super Rigid Carbon Frame & CNC Machined Aluminum Construction
2. Slim & Aerodynamic Pre-Painted Fiberglass Canopy
3. One-piece Low Gravity Molded Skid /Integrated Antenna Holder
4. 2-piece Reinforced Carbon Main Frame (1.5mm)
5. Integrated One-piece High-positioned Battery & ESC Tray
6. Adjustable Bell-Hiller Mixing Ratio
7. One-piece Machined Aluminum Mast Block /Servo Mount
8. Metal & Carbon Light Tail Case/ Metal Grips
9. Canopy With Integrated Heat Sink For Efficient Thermal Dissipation
10. Equipped With Lightweight Paddles for 3D (4.4gr)

1. 高剛性碳纖維及金屬結構主體
2. 原廠塗裝完成玻纖材質機頭罩
3. 一體式低重心腳架及天線組
4. 二片式強化碳纖維主側板
5. 整合式高置電池座及速控器座
6. 可調式混控比率旋翼頭組設計
7. 一體式金屬主軸軸承座及伺服機座
8. 金屬/碳纖維輕量化尾殼/金屬夾片
9. 高效率散熱孔設計機頭罩
10. 標準搭配3D版輕量化平衡翼

JK0239