OLYMPUS

# PT-050

日本語

ENGLISH

FRANÇAIS

DEUTSCH

ESPAÑOL

中文

한국어

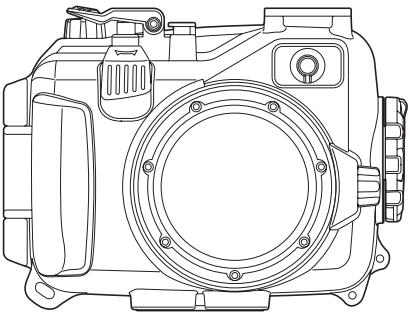

Jp 取扱説明書

En Instruction Manual

Fr Mode d'emploi

De Bedienungsanleitung

Sp Manual de Instrucciones

Cs 使用说明书

Kr 취급설명서

OLYMPUS IMAGING CORP.

- Thank you for buying the Underwater Case PT-050 (hereinafter Case).
- Please read this instruction manual carefully and use the product safely and correctly. Please keep this instruction manual for reference after reading it.
- Wrong use may cause damage to the camera inside the Case due to water leakage, and repair may not be possible.
- Before use, perform an advance check as described in this manual.

## Introduction

- Unauthorized copying of this manual in part or in full, except for private use, is prohibited. Unauthorized reproduction is strictly prohibited.
- OLYMPUS IMAGING CORP. shall not be responsible in any way for lost profits or any claims by third parties in case of any damage occurring from improper use of this product.

## Please read the following items before use

This Case is a precision device designed for use at a water depth within 40 m. Please handle it with sufficient care.

- Please use the Case correctly after sufficient understanding of the contents of this manual in regard to handling of the Case, checks before use, maintenance, and storage after use.
- OLYMPUS IMAGING CORP. shall in no way be responsible for accidents involving immersion of a digital camera in water.
  In addition, expenses incurred for damage of internal materials or loss of recorded contents due to water entering the camera will not be compensated.
- OLYMPUS IMAGING CORP. shall not pay any compensation for accidents (injuries or material damage) at the time of use.

## For safe use

This instruction manual uses various pictographs for correct use of the product and to prevent danger to the user and other persons as well as property damage. These pictographs and their meanings are shown below.

En

| | |
|---|---|
| ⚠ **WARNING** | This indicates contents for which the possibility of human death or severe injury in case of handling under disregard of this indication can be assumed. |
| ⚠ **CAUTION** | This indicates contents for which the possibility of human injury or the possibility of material damage in case of handling under disregard of this indication can be assumed. |

### ⚠ WARNING

① Keep this product out of the reach of babies, infants, and children. There is the possibility of occurrence of the following types of accidents.
- Injury by dropping onto the body from a height.
- Injury from parts of the body getting caught in parts which open and close.
- Swallowing of small parts, O-ring, silicone grease and silica gel. Please consult a physician immediately if any parts have been swallowed.
- Triggering of the flash in front of the eyes may cause permanent vision impairment etc.

② Do not store with a battery in the digital camera housed in this product. Storage with a battery inserted may lead to leakage of the battery liquid and fire.

③ If leakage of water should occur with a camera installed in this product, quickly remove the battery from the camera. There is the possibility of ignition and explosion from generation of hydrogen gas.

④ This product is made of resin. There is the possibility that injuries may be caused when it becomes broken because of strong impact with a rock or other hard objects. Please handle it with sufficient care.

## ⚠ CAUTION

① Do not disassemble or modify this product. This may cause water leakage or trouble. OLYMPUS IMAGING CORP. shall not be responsible for damage, lost profits, etc. caused by loss of image data because of disassembly, repair or modification of this product by people other than third parties specified by OLYMPUS IMAGING CORP. or for other reasons.

② Use or storage of the product at the following locations may cause defective operation, trouble, damage, fire, internal clouding, or water leakage. This should be avoided.
- Locations reaching high temperatures such as those under direct sunlight, in an automobile, etc.
- Locations with open fire
- Water depths in excess of 40 m
- Locations subject to vibrations
- Locations with high temperature and humidity or with severe temperature changes
- Locations with volatile substances

③ Opening and closing at locations with much sand, dust, or dirt may impair the waterproof characteristic and cause water leakage. This should be avoided.

④ This product is not a case to soften impacts to the camera inside the product. When this product with a digital camera inside it is subjected to impacts or heavy objects are placed onto it, the digital camera may become damaged. Please handle it with sufficient care.

⑤ Do not use the following chemicals for cleaning, corrosion prevention, prevention of fogging, repair or other purposes. When these are used for the Case directly or indirectly (with the chemicals in vaporized state), they may cause cracking under high pressure or other problems.

| Chemicals which cannot be used | Explanation |
|---|---|
| Volatile organic solvents, chemical detergents | Do not clean the Case with alcohol, gasoline, thinner or other volatile organic solvents or with chemical detergents etc. Use pure water or lukewarm water. |
| Anticorrosion agent | Do not use anticorrosion agents. The metal parts use stainless steel or brass. Wash with pure water. |
| Commercial defogging agents | Do not use commercial defogging agents. Always use the specified desiccant silica gel. |
| Grease other than specified silicone grease | Use only the specified silicone grease for the silicone O-ring, as otherwise the O-ring surface may deteriorate and water leakage may occur. |
| Adhesive | Do not use adhesive for repairs or other purposes. When repair is required, please contact a dealer or a service station of OLYMPUS IMAGING CORP. |

⑥ Jumping into the water with the Case in your pocket or in your hand, throwing the Case from a boat or ship into the water, and other rough handling may cause water leakage. Please handle with sufficient care, when handing it over from hand to hand etc.

⑦ If the camera on the inside should become wet because of water leakage etc., immediately wipe off all moisture and confirm the operation after the Case is dried.

⑧ Please remove the O-ring when traveling by air. Otherwise air pressure may make it impossible to open the Case.

⑨ For safe use of the digital camera in this product, please read the “Instruction Manual” for the digital camera carefully.

⑩ When sealing this product, take sufficient care that no foreign matter gets caught at the O-ring and the contact surface. It is caused for water leakage.

# Contents

En


Introduction ..... 2
Please read the following items before use ..... 2
For safe use ..... 3

1. Preparations ..... 8

Check the contents of the package..... 8
Names of the parts..... 9
Using the accesories..... 11
Install the strap..... 11
Installation and removal of the LCD hood ..... 12
Mounting and removing the lens cap ..... 12
Using the diffuser ..... 13
Mounting and removing the port adaptor and diffuser..... 13

2. Advance Check of the Case ..... 14

Advance check before use..... 14

3. Install the digital camera..... 15

Check the digital camera..... 15
Open the Case ..... 16
Pop up the flash ..... 16
Load the digital camera..... 17
Make sure the camera is loaded properly ..... 17
Seal the Case..... 18
Check the operation of the loaded camera ..... 18
Perform the final checks..... 19
Visual Inspection ..... 19
Water Leakage Test..... 19

4. How to connect the underwater flash ..... 20

Connecting the underwater optical fiber cable ..... 20

5. Taking Pictures Under Water ..... 21

Underwater shooting modes ..... 21
How to select the shooting scene ..... 22
Locking AF during underwater shooting..... 22

6. Handling After Shooting ..... 23

Wipe off any waterdrop ..... 23
Take out the digital camera..... 24
Wash the Case with pure water ..... 24

Dry the Case .....24
7. Maintaining the Waterproof Function ..... 25
Remove the O-ring.....25
Remove any sand, dirt, etc. .....25
How to Apply Grease to the O-ring .....27
Install the O-ring.....28
Replace consumable parts .....28
8. Appendix ..... 29
Specifications.....29

En

# 1. Preparations

## Check the contents of the package.

En

Check that all accessories are in the box.
Contact your dealer if accessories are missing or damaged.

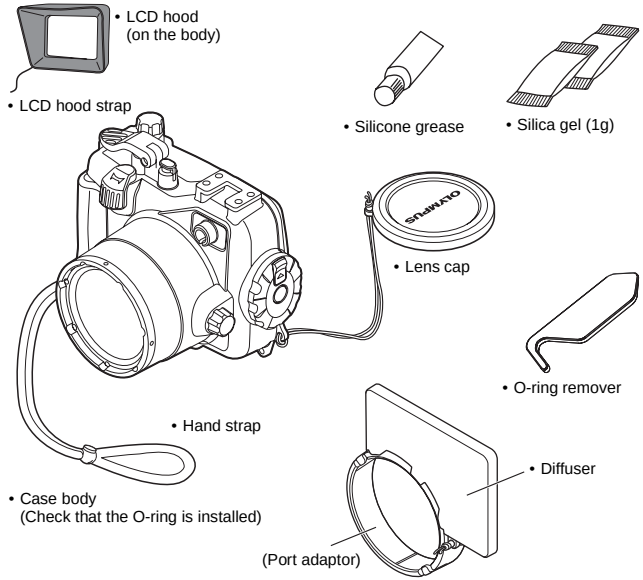


• Instruction manual (this manual)
• OLYMPUS distributor list

## Names of the parts

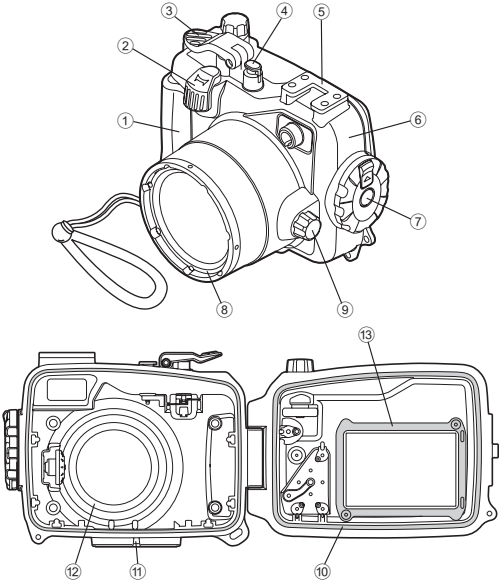


① Palm grip
*② Zoom lever
*③ Shutter lever
*④ ON/OFF button
⑤ Accessory mount
⑥ Front lid
⑦ Open/close dial
⑧ Lens ring
*⑨ Control dial
⑩ O-ring
⑪ Tripod seat
⑫ Light shield hood
⑬ LCD inner hood

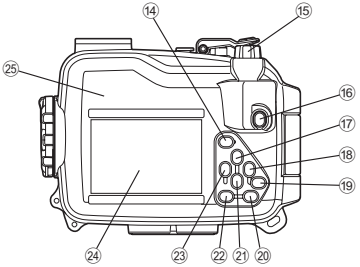


*⑭ ▶ button
*⑮ Mode dial
*⑯ ● (REC) button
*⑰ button/arrow pad ▲
*⑱ button/Arrow pad ▶
*⑲ **OK** button
*⑳ **INFO** button
*㉑ **AFL**/🗑 button/arrow pad ▼
*㉒ **MENU** button
*㉓ button/Arrow pad ◀
㉔ LCD monitor window
㉕ Rear lid

Memo:
The Case operation parts marked by * corresponds to the operation parts of the digital camera. When the operation parts of the Case are operated, the corresponding functions of the digital camera will operate. For details of the functions, refer to the instruction manual for the digital camera.

# Using the accesories

## Install the strap

Install the strap on the Case body.

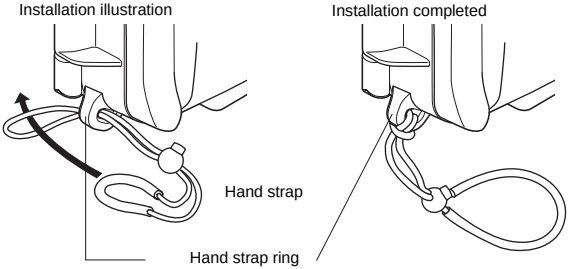


## How to use the hand strap

Pass your hand through the hand strap and adjust the length with the stop button.

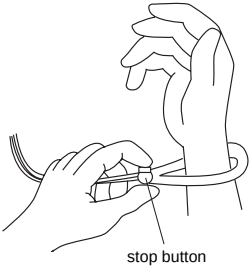

## Installation and removal of the LCD hood

En

### Installation

Fit the LCD hood as shown in the figure into the guides above and below the LCD monitor window one after the other.

### Removal

Remove the LCD hood from the guides above and below the LCD monitor window one after the other by widening the LCD hood.

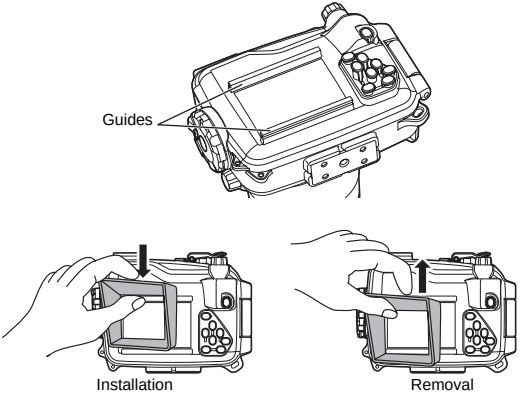


## Mounting and removing the lens cap

Fit the lens cap onto the lens ring as shown in the figure. Be sure to remove the lens cap before shooting.

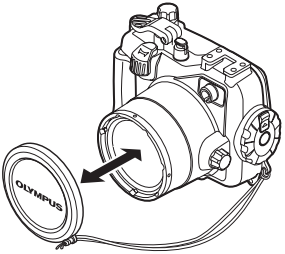

## Using the diffuser

① Install the hand strap on the Case body.

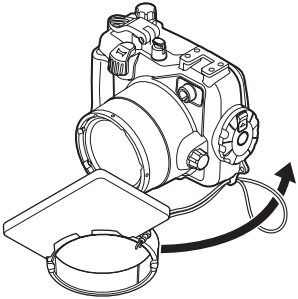

② Install the diffuser on the Case.
Install to fit together the convex part of the port adaptor on the diffuser and the concave part of the port on the Case.

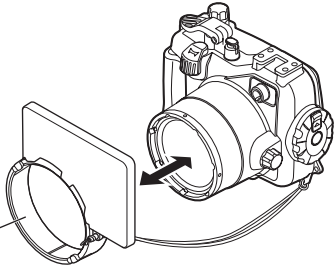


## Mounting and removing the port adaptor and diffuser

Fit the ▲ mark on the side of the strap hole, then assemble the parts.
When removing, be sure to remove the ▲ part finally.

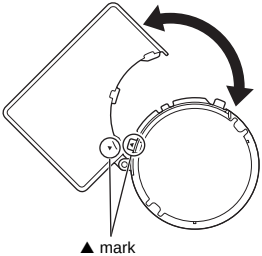

# 2. Advance Check of the Case

## Advance check before use

En

This Case has been the subject of thorough quality control for the parts during the manufacturing process and thorough function inspections during the assembly. In addition, a water pressure test is performed with a water pressure tester for all products to confirm that the performance conforms to the specifications.
However, depending on the carrying and storage conditions, the maintenance status, etc., the waterproof function may be damaged. Before using, always perform the following advance checks.

### Advance Check

① Before installing the digital camera in the Case, immerse the empty Case to confirm that there is no water leakage.
We recommend to immerse the empty Case to the intended water depth, however, if you cannot perform this way, check the Case by referring “Water Leakage Test” (P.19).

② Main causes of water leakage are as follows.
- The O-ring has not been installed.
- A part of the O-ring or the entire O-ring is outside the specified groove.
- O-ring damage, cracks, deterioration or deformation
- Sand, fibers, hair or other foreign matter sticking to the O-ring, the O-ring groove or the O-ring contact surface on the front lid
- Damage to the O-ring groove or the O-ring contact surface on the front lid
- Catching of the strap, silica gel, etc. when closing the Case

Perform the test after the above causes have been eliminated.

⚠ CAUTION:
If a leak is detected in normal handling, do not use the Case and contact Olympus.

# 3. Install the digital camera

## Check the digital camera

Check the digital camera before loading it in the Case.

### 1. Battery Confirmation

The flash is used very frequently during underwater shooting.
Before diving, make sure that you have enough remaining battery power.

### 2. Confirmation of the Remaining Number of Pictures to be Taken

Confirm that the image storage has a sufficient remaining number of pictures to be taken.

### 3. Remove the hand strap, lens cap and shoe cover from the digital camera.

When a digital camera is loaded without removing the strap or lens cap, the strap may get caught between the Case lids and may cause water leakage.

## Open the Case

① Slide and hold the slide lock towards the arrow direction (1 of figure below) and turn the open/close dial counter clockwise (2 of figure below).
② Turn the open/close dial to the position where it cannot be turned further.
③ Open the rear lid of the Case gently.

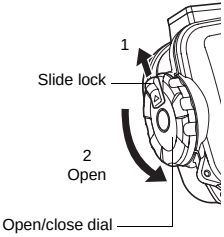


⚠ CAUTION:
Do not exert too much force while turning the open/close dial. Doing so may damage the dial.

## Pop up the flash

When the camera is in the Case, attach the diffuser if you use only the camera's built-in flash.
Be sure to pop up the flash when you use the underwater flash.

## Load the digital camera

① Confirm that the digital camera is OFF.
② Gently insert the digital camera into the Case.
③ Insert piling up silica gel bag (1g) between the bottom of the digital camera and the Case.
The silica gel bag provided for prevention of fogging.

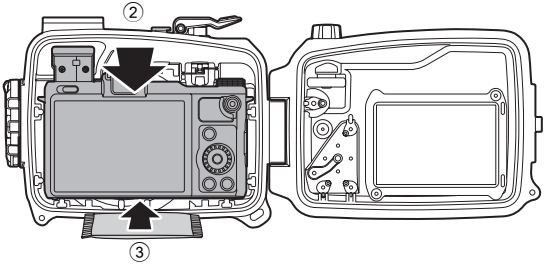


⚠ CAUTION:

- The silica gel bag will be caught when the Case is sealed and water leakage will occur.
- Once silica gel has been used, the moisture absorption performance will be impaired. Always replace the silica gel when the Case is opened and closed.

## Make sure the camera is loaded properly

Check the following points before sealing the Case.

- Is the digital camera loaded properly?
- Is silica gel inserted all the way at the specified location?
- Is the O-ring attached properly to the opening on the Case?
- Is there any dirt or foreign matter on the O-ring or the O-ring contact surface on the front lid?
- Is the waterproof function maintenance performed? For details of the maintenance, see “7. Maintaining the Waterproof Function” (P.25) of this manual.

## Seal the Case

① Close the Case gently while aligning the mounting projection of the rear lid and groove.
② Turn the open/close dial clockwise until lock.
- The Case is sealed.

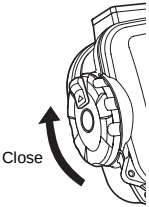


⚠ CAUTION:
- If the open/close dial is not fully turned, the Case will not be sealed. This will cause water leakage.
- Close the rear lid of the Case so that the lens cap or LCD hood strap doesn't catch. If it catches, water leaks may result.

## Check the operation of the loaded camera

After sealing the Case, check that the camera operations normally.
① Push the ON/OFF button on the Case and confirm that the camera turns ON/OFF.
② Press the shutter lever on the Case and confirm that the camera shutter releases.
- Also operate other control buttons on the Case and confirm that the camera functions properly.

## Perform the final checks

### Visual Inspection

After sealing the Case, check the sealing part of front and rear lid visually to confirm that the O-ring is not twisted or out of the groove and that no foreign matter has been caught. Also check that the Case is not broken or cracked.

> ⚠ CAUTION:
> Hairs, fibers, and other narrow items are not very apparent, but they may cause water leakage. In addition, pay special attention to breaks and cracks on the Case.

## Water Leakage Test

The final test after loading the camera is explained below. Always perform this test. It can be performed easily in a water tank or a bathtub. The required time is about five minutes.

- At first, immerse the Case for only three seconds and check that no water drop etc. to the Case.
- Next, immerse the Case for 30 seconds and check that no water drop etc. to the Case.
- Furthermore, immerse the Case for three minutes.
- Check followings:
  - check that no water has accumulated the Case.
  - check that the Case is not clouded.
  - check that no water has entered the Case.
- If inside of the Case becomes cloudy or there is a water drop, do the maintenance of the O-ring and perform the water leakage test again.

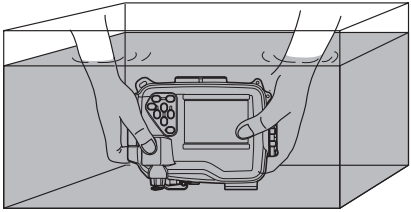

# 4. How to connect the underwater flash

En

## Connecting the underwater optical fiber cable

To connect the UFL-2 underwater flash (optional) to the Case using an underwater optical fiber cable (optional: PTCB-E02), follow the procedures below.

### How to connect the underwater optical fiber cable

① Remove the diffuser.

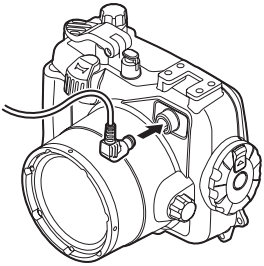

② Put the underwater optical fiber cable plug all the way into the optical fiber cable insertion slot.

> Tip:
> When using the optional underwater flash, use the optional flash window cover PFC-050 in order to reduce the color unevenness caused by the flash.

### Setting of the digital camera

Set the RC mode of the camera to ON so that the camera's built-in flash is activated.

In case of UFL-2, turn the RC mode to OFF.
For details, refer to the instruction manual of UFL-2.

In case of UFL-1, plug the optical fiber cable in the same way.
Turn the RC mode of the camera to OFF.

# 5. Taking Pictures Under Water

## Underwater shooting modes

En

### Underwater Wide-Angle

Suitable for shooting a scene that extends across a wide range such as a school of fish swimming through the water. Background blues are vividly reproduced.

### Underwater Macro

Suitable for close-up shooting of small fish and other underwater creatures. Natural colors of the underwater are accurately reproduced.

⚠ CAUTION:
When taking macro pictures on the wide-angle side, the flash light may be missing in some parts or the light volume may not be uniform.
During underwater shooting, shooting conditions (water clarity, suspended matter, etc.) can have a significant effect on the range of the flash.
Always check your pictures on the LCD monitor after shooting.

## How to select the shooting scene

① In the through display, turn the control dial to select the shooting scene, and then press the OK button.
② In the SCN selection display, press the up arrow pad (☒ button) or down (AFL/🗑 button) to select the shooting mode, and then press the OK button.

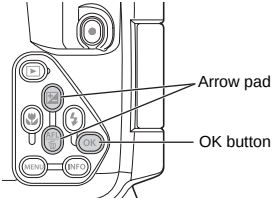


## Locking AF during underwater shooting

When the “Underwater Wide-Angle” or “Underwater Macro” mode is selected, you can easily lock the focus position (AF lock operation) by pressing the AFL/🗑 button (AFL button) on the rear of the protector. When the focus is locked, the AF lock indicator (AFL) appears on the LCD monitor screen of the camera.
To cancel the AF lock, press the AFL button again.

### Selecting the underwater movie mode

The underwater movie mode is available when the WB is set to “Underwater WB”.
The AFL will be cancelled when the movie start.

For details, see the instruction manual of the digital camera.

# 6. Handling After Shooting

## Wipe off any waterdrop



After completing the shooting and returning to land or a ship, wash lightly in pure water and wipe off any waterdrop sticking to the Case. Use air or a soft cloth not leaving any fibers to thoroughly wipe any waterdrop etc. from the joint between the front and rear lid, the shutter lever, the palm grips, and the open/close dial.

> ⚠ CAUTION:
> When waterdrops remain between the front and the rear lid, they may spill to the inside when the Case is opened. Take special care to wipe off all waterdrops.

## Take out the digital camera

Open the Case carefully and take the digital camera out, then remove the digital camera.

⚠ CAUTION:

- When opening the Case, take sufficient care that no water will drip from your hair or body onto the Case and the camera.
- Before opening the Case, make sure that your hands or gloves are free of sand, fibers, etc.
- Do not open or close the Case at locations where there is water spray or sand.
- Take care not to touch the digital camera or the battery with hands wet with sea water.

## Wash the Case with pure water

After use, seal the Case again after taking out the camera and wash it sufficiently in pure water as soon as possible. After using in sea water, it is important to immerse it for a fixed time (30 minutes to 1 hour) in pure water to remove any salt.

⚠ CAUTION:

- Water leakage may occur when a high water pressure is partially applied. Before washing the Case with water, take out the digital camera from it.
- Operate the shutter lever and various buttons of this product in pure water to remove salt adhering to the shaft. Do not disassemble for cleaning.
- Drying the Case with salt adhered may impair the function. Always wash off any salt after use.

## Dry the Case

After washing with pure water, use a clean cloth to wipe off any waterdrops. Be sure to use a cloth free of salt residue that doesn’t leave any loose fibers. Dry the Case completely at a well ventilated location in the shade.

⚠ CAUTION:

- Do not use hot air from a hair dryer or the like for drying and do not expose the Case to direct sunlight, as this may accelerate deterioration and deformation of the Case and deterioration of the O-ring, leading to leakage of water.
- When wiping the Case, take care not to cause scratches.

# 7. Maintaining the Waterproof Function



Whenever you open the rear lid of the Case, always be sure to perform the O-ring maintenance operation as described below.
Perform at the location without sand or dust, after washing and drying your hands.

## Remove the O-ring

① Insert the O-ring remover between the O-ring and the O-ring groove.
② Slip the tip of the inserted O-ring remover below the O-ring.
(Be careful not to scratch the O-ring groove with the tip of the O-ring remover.)
③ Hold the O-ring with your fingertips after it has come out of the groove and remove it from the Case.

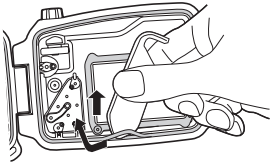

## Remove any sand, dirt, etc.

After visually checking that dirt has been removed from the O-ring, checks for sand and other foreign matter adhered, damage and cracks can be done by squeezing the entire circumference of the O-ring lightly with your fingertips.

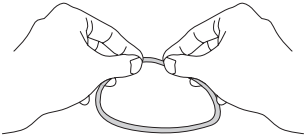

Remove any foreign matter adhered to the O-ring groove using a lint-free clean cloth or cotton swab. Also remove any sand or dirt adhered to the O-ring contact surface on the front lid of the case.

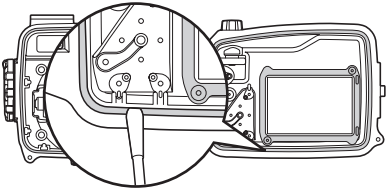

⚠ CAUTION:

- Maintenance of the waterproof functions is required even before using this product underwater for the first time.
- When a sharp object is used to remove the O-ring or to clean the inside of the O-ring groove, the Case and the O-ring may be damaged and water leakage may occur.
- Take care not to stretch the O-ring.
- Never use alcohol, thinner, benzene or similar solvents or chemical detergents to clean the O-ring. When such chemicals are used, the O-ring may be damaged or its deterioration will be accelerated.

## How to Apply Grease to the O-ring

| | | | |
|---|---|---|---|
| 1 | Apply the exclusive lubricant to each O-ring. | | Make sure that your fingers and the O-ring are free of dirt, and squeeze about 5 mm of lubricant onto a finger. (5 mm is the most appropriate amount.) |
| 2 | Spread the lubricant all over the O-ring. | | Apply the lubricant with three fingers and spread it over the ring. Be careful not to use force as this may stretch the O-ring. |
| 3 | Check that the O-ring is free of scratches or unevenness. | | After spreading the lubricant, check visually and by touch that the O-ring is not scratched and that its surface is flat. If it is damaged in any way, be sure to replace it with a brand-new O-ring. |
| 4 | Apply lubricant on the O-ring contact surface. | | Use the lubricant remaining on the fingers to clean and lubricate the case's contact surface. |

⚠ CAUTION:

- Always perform maintenance of the waterproof function even when the Case has been opened every shooting. Neglecting this maintenance may cause water leakage.
- When the Case is not to be used for a long time, remove the O-ring from the groove to prevent deformation of the O-ring, apply a thin coat of silicone grease, and store it in a clean plastic bag or the like.

## Install the O-ring

Confirm that no foreign matter is adhered, apply a thin coat of the grease provided to the O-ring, and fit the O-ring into the groove. At this point, confirm that the O-ring does not stick out from the groove.

- When sealing this product, make sure that no hairs, fibers, sand particles or other foreign matter stick not only to the O-ring, but also to the contact surface (front cover). Even a single hair or a single grain of sand may cause water leakage. Please check with special care.

Examples of foreign matter sticking to the O-ring

Hair

Fibers

Grains of sand

## Replace consumable parts

- The O-ring is a consumable part. Regardless of the number of times the Case is used, it is recommended that the O-ring be replaced with a new one at least once a year.
- Deterioration of the O-ring is accelerated by the use conditions and the storage conditions. Replace the O-ring even before a year has passed if it shows signs of damage, crack or loss of elasticity.

Note:

- Please use genuine Olympus silicone grease, silica gel and O-ring.
- Do not try to replace the O-ring by yourself.
- We recommend to perform the check periodically.

# 8. Appendix

## Specifications

En

| | |
|---|---|
| Compatible models | Olympus digital camera XZ-1 |
| Pressure resistance | Depth of up to 40 m |
| Main materials | Body/Open/close dial/Grip/Shutter lever/<br>Operation buttons: Polycarbonate<br>Lens window: Multiple coat glass<br>Operate button shafts: stainless steel |
| Diameter of lens ring | ∅67 mm |
| Dimensions | Width 154 mm x height 116 mm x thickness 119 mm |
| Weight | 485 g (camera and accessories not included) |
| Weight under water | About –350g (Accessories included) |

* We reserve the right to change the external appearance and the specifications without notice.

### Supplied accessories for PT-050

O-ring: POL-050
Silica gel: SILCA-5S
Silicone grease: PSOLG-2
LCD hood: PFUD-08
Lens cap: PRLC-13
Diffuser: PTDP-050
O-ring remover: PTAC-05

The above accessories can be purchased.

## Sold separately accessories

Silicone grease: PSOLG-3
Optical fiber cable: PTCB-E02
Underwater flash: UFL-1
UFL-2
Short arm: PTSA-02, PTSA-03
Underwater wide conversion lens: PTWC-01
Underwater macro conversion lens: PTMC-01
Maintenance kit: PMS-02
Hand strap: PST-EP01
Flash window cover: PFC-050

OLYMPUS®

http://www.olympus.com/

## OLYMPUS IMAGING CORP.

Shinjuku Monolith, 3-1 Nishi-Shinjuku 2-chome, Shinjuku-ku, Tokyo, Japan

## OLYMPUS IMAGING AMERICA INC.

3500 Corporate Parkway, P.O. Box 610, Center Valley, PA 18034-0610, U.S.A. Tel. 484-896-5000

**Technical Support (USA)**

24/7 online automated help: http://www.olympusamerica.com/support
Phone customer support: Tel. 1-888-553-4448 (Toll-free)

Our phone customer support is available from 8 am to 10 pm
(Monday to Friday) ET
E-Mail: distec@olympus.com
Olympus software updates can be obtained at: http://www.olympusamerica.com/digital

## OLYMPUS EUROPA HOLDING GMBH

Premises: Wendenstrasse 14-18, 20097 Hamburg, Germany
Tel: +49 40-23 77 3-0 / Fax: +49 40-23 07 61
Goods delivery: Bredowstrasse 20, 22113 Hamburg, Germany
Letters: Postfach 10 49 08, 20034 Hamburg, Germany

**European Technical Customer Support:**

Please visit our homepage **http://www.olympus-europa.com**
or call our TOLL FREE NUMBER* : **00800 - 67 10 83 00**
for Austria, Belgium, Denmark, Finland, France, Germany, Italy, Luxemburg, Netherlands, Norway, Portugal, Spain, Sweden, Switzerland, United Kingdom
* Please note some (mobile) phone services providers do not permit access or request an additional prefix to +800 numbers.

For all European Countries not listed and in case that you can't get connected
to the above mentioned number, please make use of the following
CHARGED NUMBERS: **+49 180 5 - 67 10 83** or **+49 40 - 237 73 4899**
Our Technical Customer Support is available from 9 am to 6 pm MET (Monday to Friday)

OLYMPUS®

http://www.olympus.com/

©2011 OLYMPUS IMAGING CORP.
Printed in China

VR348902