查询STK400-300供应商

Features of the IMST® Hybrid ICs

Excellent heat dissipation

● One of the most influential factors determining reliability of electronic devices is "heat". The IMST substrate is most suitable for the field of power electronics, dissipating heat efficiently.

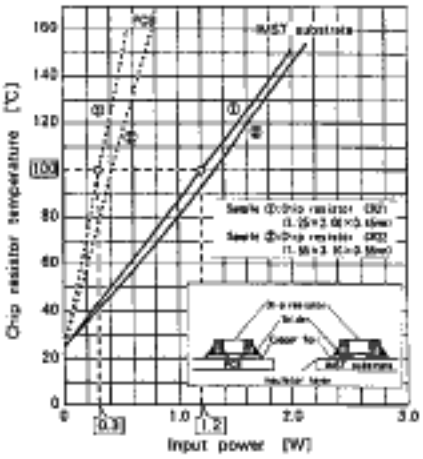

Comparison of chip resistor temperature rises
【IMST®'s values are about 1/4 of PCB's.】

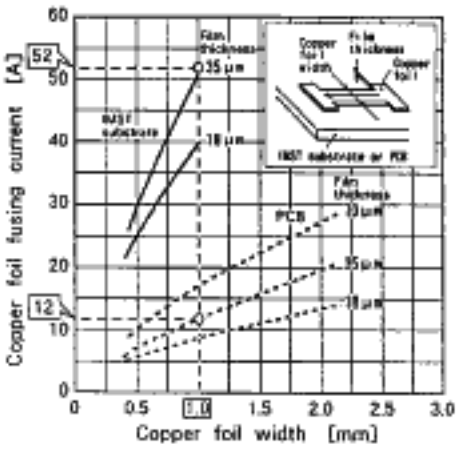

Comparison of copper foil fusing currents
【IMST®'s values are about 4 times of PCB's.】

High reliability

● Wiring is applied by mounting semiconductor bare chips directly and bonding aluminum wires. This reduces number of soldering points assuring high reliability.

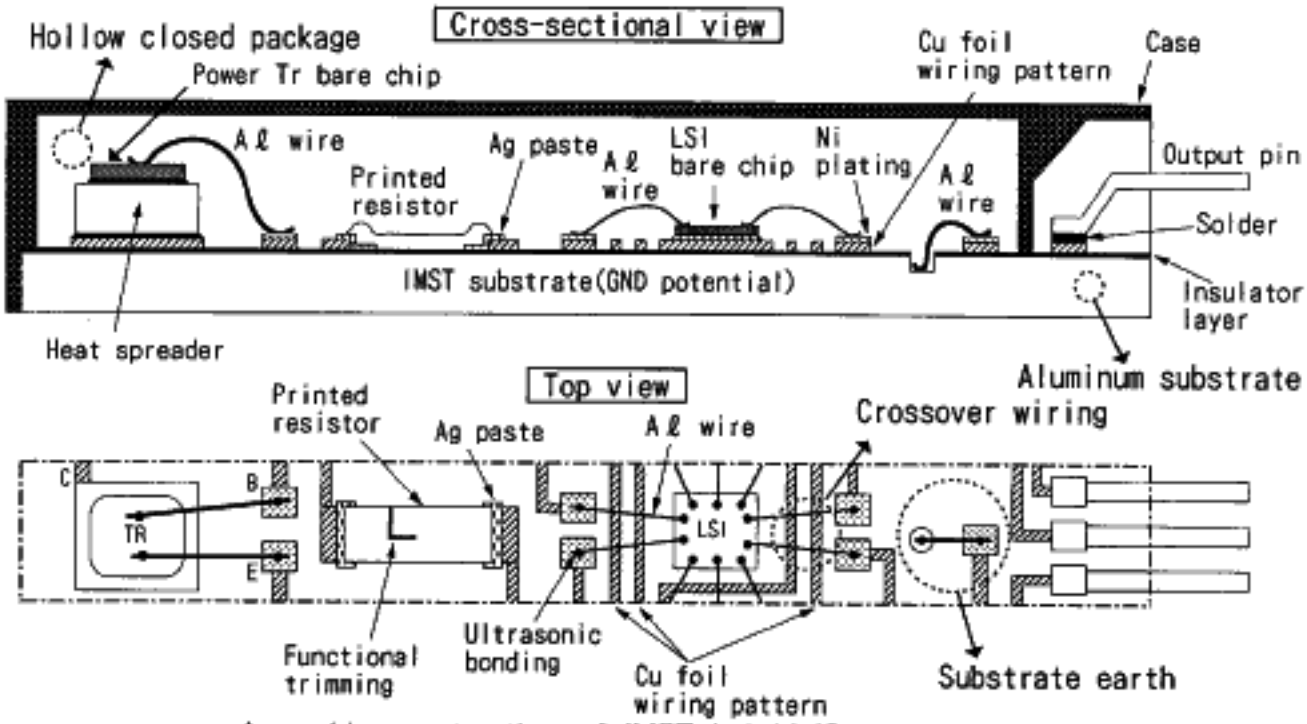

Assembly construction of IMST hybrid IC, an example

Excellent electromagnetic shielding

● Excellent electromagnetic shielding can be attained by putting the entire substrate on the ground potential because the base substrate is made of aluminum. This eliminates noise errors in the digitalized electronic devices.

Features of STK Series Audio Power ICs

Ample lineup

● STK series lineup is ample and standard based whereas the current hybrid IC market tends to customization.

Output power (per channel)	: 5 to 200W
Total harmonic distortion	: 10 to 0.005 %
Number of channels	: 1 to 3ch.
Load impedance	: 1 to 8 Ω

Pin compatibility

● The design takes pin compatibility of the hybrid IC output pin important so that a same PCB can be used for various set grades such as output capacity and distortion factor.

Excellent thermal stability

● The IMST substrate of excellent heat dissipation naturally assures excellent thermal conductivity. Temperature of the output transistor can be almost the same as the temperature compensating transistor, preventing thermal runaway.

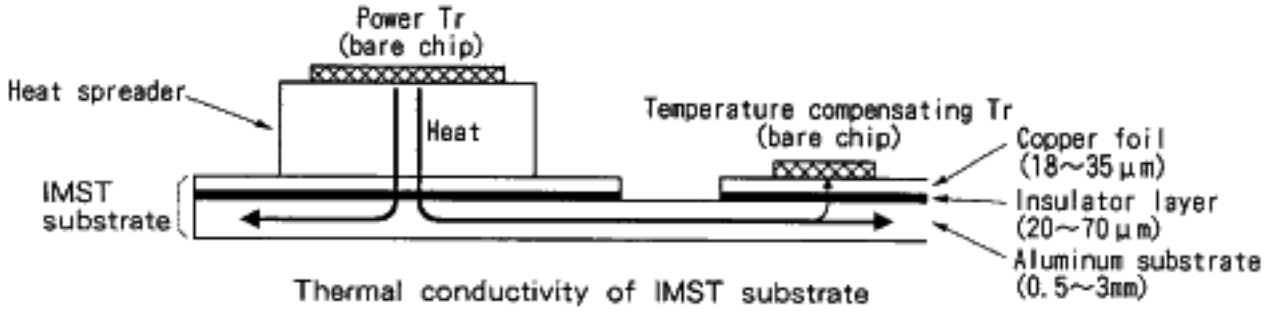

Thermal conductivity of IMST substrate

Decreasing adjustment processes

● Adjustments of the neutral voltage of the power output stage and the quiescent current are done by functional trimming inside the hybrid IC.
This eliminates adjustment processes saving on the production procedure.

Reducing the term for design

● The audio output stage remains analog however digitalization technology may advance. Design of the analog power output stage, which is considered requiring the designer's experience and skill, can be simplified by employing hybrid ICs.
This reduces the term for design and saves on the design procedure.

Decreasing number of parts

● The product of STK series decreases the total number of parts required for a unit, allowing to reduce its size, certain assembly manpower, simplify material control, improve serviceability and reduce cost.

No smoke for fire

● Since the product of STK series is designed so to emit no smoke nor fire in any abnormality, it facilitates to obtain safety approvals.

■ Line – up of Audio power Amplifier ICs

Power Supply	+Power Supply			±Power Supply							
Channel Number	1ch	2ch		1ch				2ch			
Load	1~8 Ω	4~8 Ω									
THD	10 %	1 %		0.4 %	0.08 %	0.008 %		0.4 %	0.08 %	0.4 %	0.08 %
Pin-compatible	↔	↔	↔	↔				↔			
Series name	STK4065 (Page 7)	STK4017 (Page 7)	STK4332 (Page 7)	STK4024 II (Page 8)	STK4024 V (Page 8)	STK4028 X (Page 8)	STK4036 XI (Page 8)	STK4144MK2 (Page 9)	STK4144MK5 (Page 9)	STK4145MK2 (Page 9)	STK4145MK5 (Page 9)
Output Power/channel											
5W			STK4332								
7W		STK4017	STK4352								
10W		STK4019	STK4362								
12W			STK4372								
15W		STK4021	STK4392								
20W		STK4023	STK4412	STK4024 II	STK4024 V						
25W		STK4025	STK4432	STK4026 II	STK4026 V			STK4144MK2	STK4144MK5	STK4145MK2	STK4145MK5
30W				STK4028 II	STK4028 V	STK4028 X		STK4154MK2	STK4154MK5	※ STK4155MK2	※ STK4155MK5
35W	STK4065			STK4030 II	STK4030 V			STK4164MK2	STK4164MK5	STK4165MK2	※ STK4165MK5
40W				STK4032 II		STK4032 X		STK4174MK2	※ STK4174MK5	※ STK4175MK2	※ STK4175MK5
45W						STK4034 X		STK4184MK2	STK4184MK5	STK4185MK2	※ STK4185MK5
50W				STK4036 II	STK4036 V	STK4036 X	STK4036 XI	※ STK4194MK2	STK4194MK5	※ STK4195MK2	STK4195MK5
60W	STK4067			STK4038 II			STK4038 XI	STK4204MK2	STK4204MK5	STK4205MK2	※ STK4205MK5
70W				STK4040 II	STK4040 V	STK4040 X	STK4040 XI	STK4214MK2	※ STK4214MK5	STK4215MK2	※ STK4215MK5
80W				STK4042 II	STK4042 V		STK4042 XI	※ STK4224MK2	STK4224MK5	STK4225MK2	※ STK4225MK5
100W				STK4044 II	STK4044 V	STK4044 X	STK4044 XI	STK4234MK2	STK4234MK5	STK4235MK2	※ STK4235MK5
120W					STK4046 V		STK4046 XI				
150W				STK4048 II	STK4048 V		STK4048 XI				
200W				STK4050 II	STK4050 V						

※: Under development

Car-use BTL

Pure – com.

Built – in Selfe recovery type Protection circuit

Built – in Latch type Protection circuit

±Power Supply				±Power Supply×2		±Power Supply						Power Supply
2ch		3ch				2ch						Channel Number
3~6 Ω						4~8 Ω				2~8 Ω		Load
0.4%	0.08%	0.4%	0.08%	0.4%	0.08%	0.4%	0.08%	0.02%	0.05%	0.005%		THD
←→						←→				←→		Pin-compatible
STK401-010 (Page 10)	STK401-210 (Page 10)	STK400-010 (Page 11)	STK400-210 (Page 11)	STK400-450 (Page 11)	STK400-650 (Page 11)	STK4102 II (Page 12)	STK4201 II (Page 12)	STK4121 V (Page 12)	STK4141 X (Page 12)	STK4196 X (Page 12)	STK350-000 (Page 7)	Series name
												5W
						STK4102 II						7W
※ STK401-010	※ STK401-210	※ STK400-010	※ STK400-210			STK4112 II						10W
												12W
STK401-020	STK401-220	STK400-020	※ STK400-220			STK4122 II		STK4121 V				15W
STK401-030	※ STK401-230	※ STK400-030	※ STK400-230			STK4132 II		STK4131 V				20W
STK401-040	※ STK401-240	STK400-040	※ STK400-240			STK4142 II		STK4141 V	STK4141 X			25W
STK401-050	※ STK401-250	STK400-050	※ STK400-250	※ STK400-450 (L, Rch. 15W)	※ STK400-650 (L, Rch. 15W)	STK4152 II		STK4151 V	STK4151 X			30W
STK401-060	※ STK401-260	※ STK400-060	※ STK400-260	※ STK400-460 (L, Rch. 15W)	※ STK400-660 (L, Rch. 15W)	STK4162 II		STK4161 V				35W
STK401-070	※ STK401-270	※ STK400-070	※ STK400-270	※ STK400-470 (L, Rch. 20W)	※ STK400-670 (L, Rch. 20W)	STK4172 II		STK4171 V	STK4171 X		STK350-000	40W
STK401-080	※ STK401-280	※ STK400-080	※ STK400-280	※ STK400-480 (L, Rch. 20W)	※ STK400-680 (L, Rch. 20W)	STK4182 II		STK4181 V			STK350-000	45W
STK401-090	※ STK401-290	STK400-090	STK400-290	※ STK400-490 (L, Rch. 25W)	※ STK400-690 (L, Rch. 25W)	STK4192 II		STK4191 V	STK4191 X	STK4196 X	STK350-000	50W
STK401-100	※ STK401-300	※ STK400-100	※ STK400-300	※ STK400-500 (L, Rch. 30W)	※ STK400-700 (L, Rch. 30W)		STK4201 II	STK4201 V	STK4201 X		STK350-010	60W
STK401-110	※ STK401-310	※ STK400-110	※ STK400-310	※ STK400-510 (L, Rch. 35W)	※ STK400-710 (L, Rch. 35W)		STK4211 II	STK4211 V	STK4211 X	STK4216 X	STK350-010	70W
STK401-120	※ STK401-320			※ STK400-520 (L, Rch. 40W)	※ STK400-720 (L, Rch. 40W)		STK4221 II	STK4221 V			STK350-020	80W
STK401-130	※ STK401-330			※ STK400-530 (L, Rch. 50W)	※ STK400-730 (L, Rch. 50W)		STK4231 II	STK4231 V			STK350-030	100W
STK401-140	※ STK401-340						STK4241 II	STK4241 V			STK350-040	120W
											STK350-050	150W
									※:Under development			200W

Output Power/channel

3ch. Same output power | 3ch. Different output power (2ch + Center ch.) | Built – in Muting circuit | 2Ω Load | Voltage amplifier

■Main Characteristics

■STK4065 series

Type Number	Output power Po[W]			THD[%]	Vcc max[V]	Vcc[V]	Case outline	Features
	RL = 4Ω	RL = 2Ω	RL = 1Ω					
STK4065	23	35	–	10	18	13.2	46.5×25.5×8.5 (No. 4081)	◆Car-stereo use ◆BTL ◆Pin-compatible
STK4067	23	40	60				64×31×8.5 (No. 4131)	

■STK4017 series

Type Number	Output power Po[W]	THD[%]	Vcc max[V]	Vcc [V]		Case outline	Features
				RL = 8Ω	RL = 4Ω		
STK4017	6.5	1.0	45	26.4	26.4	46.5×25.5×8.5 (No. 4021B)	◆1ch. /1package ◆+power supply ◆Pin-compatible
STK4019	10.0		54	32.0	29.0		
STK4021	15.0		64	38.0	34.0		
STK4023	20.0		73	44.0	38.0	59.2×31×8.5 (No. 4070)	
STK4025	25.0		80	48.0	44.0		

■STK4332 series

Type Number	Output power Po[W]	THD[%]	Vcc max[V]	Vcc [V]		Case outline	Features
				RL = 8Ω	RL = 4Ω		
STK4332	5 + 5	1.0	32	23	21	59.2×25.5×8.5 (No. 4032A)	◆2ch. /1package ◆+power supply ◆Pin-compatible
STK4352	7 + 7		39	27	25		
STK4362	10 + 10		50	33	28	59.2×31×8.5 (No. 4033)	
STK4372	12 + 12		54	35	31		
STK4392	15 + 15		56	39	36		
STK4412	20 + 20		63	44	40		
STK4432	25 + 25		70	49	44		

■STK350 – 000 series

Type Number	Output power Po[W]	THD[%]	Vcc max[V]	Vcc [V]	Case outline	Features
				RL = 8Ω		
STK350 – 000	40 ~ 60	0.005	± 55	± 36	53×22×9 (No. 4147)	◆Voltage amplifier ◆Pin-compatible
STK350 – 010	60 ~ 80		± 59	± 41		
STK350 – 020	80 ~ 90		± 65	± 47		
STK350 – 030	90 ~ 100		± 75	± 50		
STK350 – 040	100 ~ 120		± 80	± 55		
STK350 – 050	120 ~ 150		± 90	± 60		

※:Under development

■STK4024 II series／STK4024 V series／STK4028 X series／STK4036 XI series

Type Number	Output power Po[W]	THD[%]	Vcc max[V]	Vcc [V] $R_L = 8\Omega$	Vcc [V] $R_L = 4\Omega$	Case outline	Features
STK4024 II	20	0.4	± 34.5	± 23.0	± 20.0	59.2×31×8.5 (No. 4033)	◆1ch. /1package ◆±Power supply ◆Pin-compatible with STK4036XI series
STK4026 II	25		± 38.0	± 26.0	± 22.0		
STK4028 II	30		± 42.0	± 27.5	± 25.0		
STK4030 II	35		± 45.0	± 30.0	± 27.0		
STK4032 II	40		± 48.0	± 32.0	± 29.0		
STK4036 II	50		± 52.0	± 35.0	± 31.0		
STK4038 II	60		± 57.0	± 38.0	± 32.5		
STK4040 II	70		± 60.0	± 42.0	–		
STK4042 II	80		± 65.0	± 45.0	–	64×36.5×8.5 (No. 4075)	
STK4044 II	100		± 73.0	± 51.0	–		
STK4048 II	150		± 86.0	± 59.0	–	78×44×9 (No. 4051A)	
STK4050 II	200		± 95.0	± 66.0	–		
STK4024 V	20	0.08	± 37.0	± 24.5	± 21.5	64×31×8.5 (No. 4062)	
STK4026 V	25		± 39.0	± 26.0	± 22.0		
STK4028 V	30		± 42.0	± 27.5	± 25.0		
STK4030 V	35		± 46.0	± 30.0	± 27.0		
STK4036 V	50		± 52.0	± 35.0	± 31.0		
STK4040 V	70		± 62.0	± 42.0	± 36.0		
STK4042 V	80		± 65.0	± 45.0	–	64×36.5×8.5 (No. 4075)	
STK4044 V	100		± 73.0	± 51.0	–		
STK4046 V	120		± 80.0	± 55.0	–	78×44×9 (No. 4051A)	
STK4048 V	150		± 87.0	± 60.0	–		
STK4050 V	200		± 95.0	± 66.0	–		
STK4028 X	30	0.008	± 42.0	± 29.0	± 26.0	64×31×8.5 (No. 4062)	
STK4032 X	40		± 49.0	± 33.5	± 30.0		
STK4034 X	45		± 50.0	± 35.0	± 31.0		
STK4036 X	50		± 52.0	± 36.5	± 31.5		
STK4040 X	70		± 62.0	± 42.5	± 36.0		
STK4044 X	100	0.018	± 74.0	± 51.0	–	64×36.5×8.5 (No. 4075)	
STK4036 XI	50	0.008	± 53.5	± 37.0	–	64×36.5×8.5 (No. 4075)	◆1ch. /1package ◆±Power supply ◆Pure-complimentary ◆Pin-compatible with STK4024 II series, STK4024 V series, STK4028 X series
STK4038 XI	60		± 58.0	± 40.0	–		
STK4040 XI	70		± 63.0	± 43.5	–		
STK4042 XI	80		± 67.0	± 46.5	–		
STK4044 XI	100		± 74.0	± 51.0	–		
STK4046 XI	120		± 80.0	± 55.0	–	78×44×9 (No. 4151A)	
STK4048 XI	150		± 87.0	± 60.0	–		

【Pin－compatibility of Output pins】

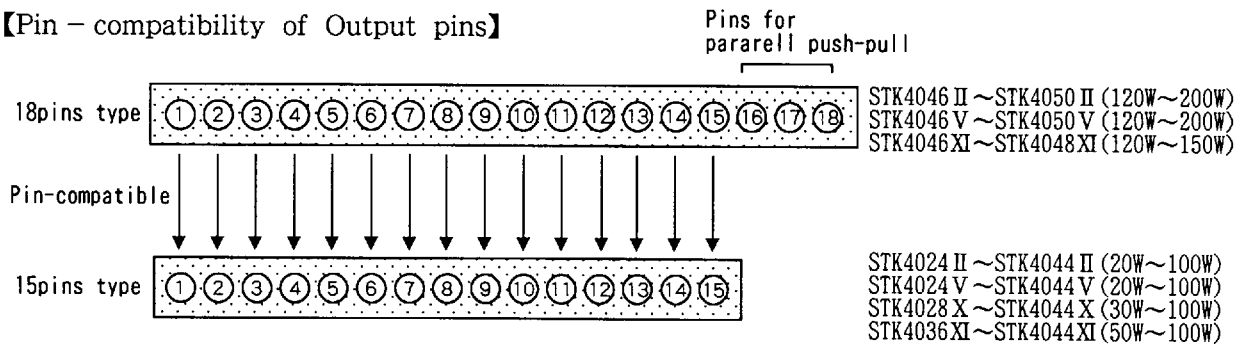

7997076 0012913 52T

■ Main Characteristics

■STK4144MK2 series／STK4144MK5 series／STK4145MK2 series／STK4145MK5 series

Type Number	Output power Po[W]	THD[%]	Vcc max[V]	Vcc [V] $R_L = 8\Omega$	Vcc [V] $R_L = 4\Omega$	Equivalent circuit	Case outline	Features
STK4144MK2	25 + 25	0.4	± 40.0	± 27.0	± 22.0	Fig.1	78×44×9 (No. 4086A)	◆Built-in Self recovery type Protection circuit ◆2ch. /1package
STK4154MK2	30 + 30		± 42.0	± 28.0	± 25.0			
STK4164MK2	35 + 35		± 45.0	± 30.5	± 26.5			
STK4174MK2	40 + 40		± 48.0	± 32.0	± 28.0			
STK4184MK2	45 + 45		± 50.0	± 33.5	± 30.0			
※ STK4194MK2	50 + 50		± 52.5	± 35.0	± 32.0			
STK4204MK2	60 + 60		± 55.0	± 38.5	–	Fig.2	90×53×8.5 (No. 4110A)	
STK4214MK2	70 + 70		± 60.0	± 42.0	–			
※ STK4224MK2	80 + 80		± 65.0	± 45.0	–			
STK4234MK2	100 + 100		± 75.0	± 51.0	–			
STK4144MK5	25 + 25	0.08	± 40.5	± 27.0	± 24.0	Fig.3	78×44×9 (No. 4086A)	◆±Power supply ◆Pin-compatible with STK4145MK2 series, STK4145MK5 series
STK4154MK5	30 + 30		± 42.0	± 28.5	± 25.0			
STK4164MK5	35 + 35		± 46.0	± 30.5	± 26.5			
※ STK4174MK5	40 + 40		± 49.0	± 32.5	± 28.0			
STK4184MK5	45 + 45		± 51.0	± 34.0	± 30.0			
STK4194MK5	50 + 50		± 53.0	± 35.5	± 32.0			
STK4204MK5	60 + 60		± 57.0	± 39.0	–	Fig.4	90×53×8.5 (No. 4110A)	
※ STK4214MK5	70 + 70		± 62.0	± 43.0	–			
STK4224MK5	80 + 80		± 65.0	± 45.0	–			
STK4234MK5	100 + 100		± 75.0	± 51.0	–			
STK4145MK2	25 + 25	0.4	± 40.0	± 27.0	± 22.0	Fig.5	78×44×9 (No. 4086A)	◆Built-in Latch type Protection circuit ◆2ch. /1package
※ STK4155MK2	30 + 30		± 42.0	± 28.0	± 25.0			
STK4165MK2	35 + 35		± 45.0	± 30.5	± 26.5			
※ STK4175MK2	40 + 40		± 48.0	± 32.0	± 28.0			
STK4185MK2	45 + 45		± 50.0	± 33.5	± 30.0			
※ STK4195MK2	50 + 50		± 52.5	± 35.0	± 32.0			
STK4205MK2	60 + 60		± 55.0	± 38.5	–	Fig.6	90×53×8.5 (No. 4110A)	
STK4215MK2	70 + 70		± 60.0	± 42.0	–			
STK4225MK2	80 + 80		± 65.0	± 45.0	–			
STK4235MK2	100 + 100		± 75.0	± 51.0	–			
STK4145MK5	25 + 25	0.08	± 40.5	± 27.0	± 24.0	Fig.7	78×44×9 (No. 4086A)	◆±Power supply ◆Pin-compatible with STK4144MK2 series, STK4144MK5 series
※ STK4155MK5	30 + 30		± 42.0	± 28.5	± 25.0			
※ STK4165MK5	35 + 35		± 46.0	± 30.5	± 26.5			
※ STK4175MK5	40 + 40		± 49.0	± 32.5	± 28.0			
※ STK4185MK5	45 + 45		± 51.0	± 34.0	± 30.0			
STK4195MK5	50 + 50		± 53.0	± 35.5	± 32.0			
※ STK4205MK5	60 + 60		± 57.0	± 39.0	–	Fig.8	90×53×8.5 (No. 4110A)	
※ STK4215MK5	70 + 70		± 62.0	± 43.0	–			
※ STK4225MK5	80 + 80		± 65.0	± 45.0	–			
※ STK4235MK5	100 + 100		± 75.0	± 51.0	–			

※:Under development

【Pin－compatibility of Output pins】

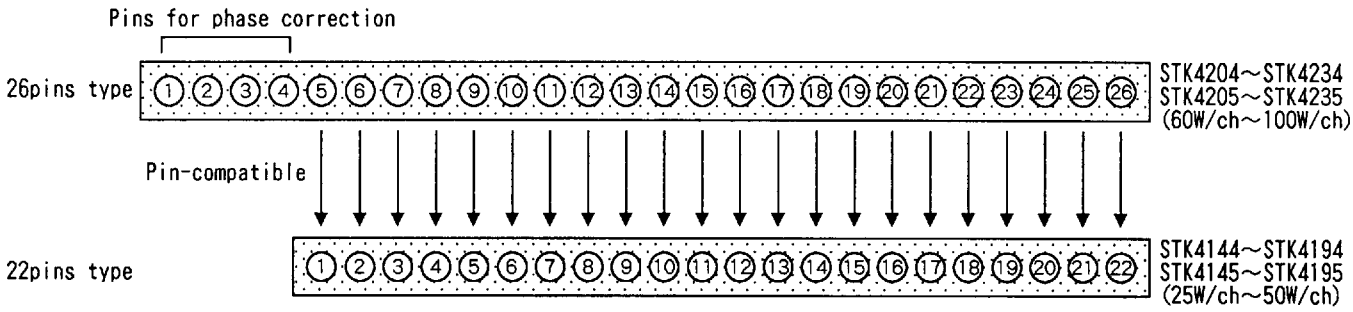

7997076 0012914 466

■STK401 − 010 series／STK401 − 210 series

Type Number	Output power Po[W]	THD[%]	Vcc max[V]	Vcc [V] $R_L = 6\Omega$	Vcc [V] $R_L = 3\Omega$	Equivalent circuit	Case outline	Features
※ STK401 − 010	10 + 10	0.4	± 26	± 17.0	± 14	Fig.9	64×36.5×8.5 (No. 4134)	◆R_L=6/3Ω ◆2ch. /1package ◆±Power supply ◆Pin-compatible with STK400-010 series, STK400-210 series, STK400-450 series, STK400-650 series
STK401 − 020	15 + 15		± 29	± 20.0	± 16			
STK401 − 030	20 + 20		± 34	± 23.0	± 19			
STK401 − 040	25 + 25		± 36	± 25.0	± 21			
STK401 − 050	30 + 30		± 39	± 26.0	± 22			
STK401 − 060	35 + 35		± 41	± 28.0	± 23			
STK401 − 070	40 + 40		± 44	± 30.0	± 24			
STK401 − 080	45 + 45		± 45	± 31.0	± 25			
STK401 − 090	50 + 50		± 47	± 32.0	± 26			
STK401 − 100	60 + 60		± 51	± 35.0	± 27	Fig.10	78×44×9 (No. 4029)	
STK401 − 110	70 + 70		± 56	± 38.0	−			
STK401 − 120	80 + 80		± 61	± 42.0	−			
STK401 − 130	100 + 100		± 65	± 45.0	−	Fig.11		
STK401 − 140	120 + 120		± 74	± 51.0	−			
※ STK401 − 210	10 + 10	0.08	± 26	± 17.5	± 14	Fig.12	64×36.5×8.5 (No. 4134)	
STK401 − 220	15 + 15		± 29	± 20.0	± 16			
※ STK401 − 230	20 + 20		± 34	± 23.0	± 19			
※ STK401 − 240	25 + 25		± 36	± 25.0	± 21			
※ STK401 − 250	30 + 30		± 39	± 26.0	± 22			
※ STK401 − 260	35 + 35		± 41	± 28.0	± 23			
※ STK401 − 270	40 + 40		± 44	± 30.0	± 24			
※ STK401 − 280	45 + 45		± 45	± 31.0	± 25			
※ STK401 − 290	50 + 50		± 47	± 32.0	± 26			
※ STK401 − 300	60 + 60		± 51	± 35.0	± 27	Fig.13	78×44×9 (No. 4029)	
※ STK401 − 310	70 + 70		± 56	± 38.0	−			
※ STK401 − 320	80 + 80		± 61	± 42.0	−	Fig.14		
※ STK401 − 330	100 + 100		± 65	± 45.0	−			
※ STK401 − 340	120 + 120		± 74	± 51.0	−			

※:Under development

【Pin − compatibility of Output pins】

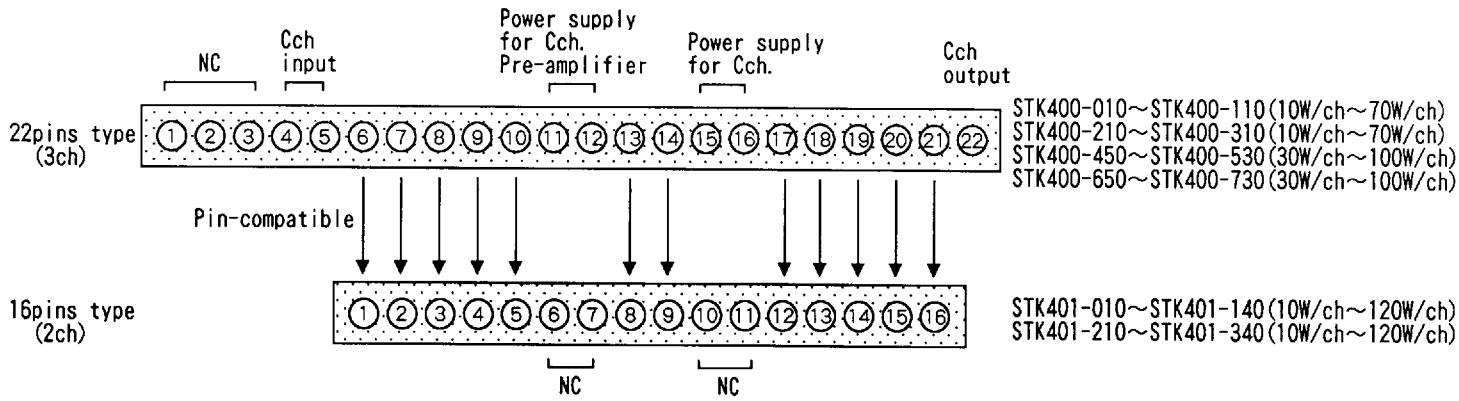

7997076 0012915 3T2

■ Main Characteristics

■STK400 − 010 series／STK400 − 210 series／STK400 − 450 series／STK400 − 650 series

Type Number	Output power Po[W]	THD[%]	Vcc max[V]	Vcc [V] RL = 6 Ω	Vcc [V] RL = 3 Ω	Equivalent circuit	Case outline	Features
※ STK400 − 010	10 + 10 + 10	0.4	± 26	± 17.0	± 14	Fig.15	78×44×9 (No. 4086A)	◆RL=6/3Ω ◆3ch. /1package (Same output power) ◆±Power supply ◆Pin-compatible with STK401-010 series, STK401-210 series, STK400-450 series, STK400-650 series
STK400 − 020	15 + 15 + 15		± 29	± 20.0	± 16			
※ STK400 − 030	20 + 20 + 20		± 34	± 23.0	± 19			
STK400 − 040	25 + 25 + 25		± 36	± 25.0	± 21			
STK400 − 050	30 + 30 + 30		± 39	± 26.0	± 22			
※ STK400 − 060	35 + 35 + 35		± 41	± 28.0	± 23			
※ STK400 − 070	40 + 40 + 40		± 44	± 30.0	± 24			
※ STK400 − 080	45 + 45 + 45		± 45	± 31.0	± 25			
STK400 − 090	50 + 50 + 50		± 47	± 32.0	± 26			
※ STK400 − 100	60 + 60 + 60		± 51	± 35.0	± 27	Fig.16	90×53×8.5 (No. 4145)	
※ STK400 − 110	70 + 70 + 70		± 56	± 38.0	−			
※ STK400 − 210	10 + 10 + 10	0.08	± 26	± 17.5	± 14	Fig.17	78×44×9 (No. 4086A)	
※ STK400 − 220	15 + 15 + 15		± 29	± 20.0	± 16			
※ STK400 − 230	20 + 20 + 20		± 34	± 23.0	± 19			
※ STK400 − 240	25 + 25 + 25		± 36	± 25.0	± 21			
※ STK400 − 250	30 + 30 + 30		± 39	± 26.0	± 22			
※ STK400 − 260	35 + 35 + 35		± 41	± 28.0	± 23			
※ STK400 − 270	40 + 40 + 40		± 44	± 30.0	± 24			
※ STK400 − 280	45 + 45 + 45		± 45	± 31.0	± 25			
STK400 − 290	50 + 50 + 50		± 47	± 32.0	± 26			
※ STK400 − 300	60 + 60 + 60		± 51	± 35.0	± 27	Fig.18	90×53×8.5 (No. 4145)	
※ STK400 − 310	70 + 70 + 70		± 56	± 38.0	−			
※ STK400 − 450	15 + 30 + 15	0.4	± 39	± 26.0	± 22.0	Fig.15	78×44×9 (No. 4086A)	◆RL=6/3Ω ◆3ch. /1package (2ch. + Center ch.) ◆±Power supply×2 ◆Pin-compatible with STK401-010 series, STK401-210 series, STK400-010 series, STK400-210 series
※ STK400 − 460	15 + 35 + 15		± 41	± 28.0	± 23.0			
※ STK400 − 470	20 + 40 + 20		± 44	± 30.0	± 24.0			
※ STK400 − 480	20 + 45 + 20		± 45	± 31.0	± 25.0			
※ STK400 − 490	25 + 50 + 25		± 47	± 32.0	± 26.0			
※ STK400 − 500	30 + 60 + 30		± 51	± 35.0	± 27.0	Fig.19	90×53×8.5 (No. 4145)	
※ STK400 − 510	35 + 70 + 35		± 56	± 38.0	−			
※ STK400 − 520	40 + 80 + 40		± 61	± 42.0	−			
※ STK400 − 530	50 + 100 + 50		± 65	± 45.0	−	Fig.20		
※ STK400 − 650	15 + 30 + 15	0.08	± 39	± 26.0	± 22.0	Fig.17	78×44×9 (No. 4086A)	
※ STK400 − 660	15 + 35 + 15		± 41	± 28.0	± 23.0			
※ STK400 − 670	20 + 40 + 20		± 44	± 30.0	± 24.0			
※ STK400 − 680	20 + 45 + 20		± 45	± 31.0	± 25.0			
※ STK400 − 690	25 + 50 + 25		± 47	± 32.0	± 26.0			
※ STK400 − 700	30 + 60 + 30		± 51	± 35.0	± 27.0	Fig.21	90×53×8.5 (No. 4145)	
※ STK400 − 710	35 + 70 + 35		± 56	± 38.0	−			
※ STK400 − 720	40 + 80 + 40		± 61	± 42.0	−	Fig.22		
※ STK400 − 730	50 + 100 + 50		± 65	± 45.0	−			

※:Under development

【Caution】 In case of 3 channel different output STK400 − 450, STK400 − 650 series, maximum power supply Vccmax and recommend power supply Vcc in the list shows numerical value of power supply of center channel. The numerical value of the power supply for L, R channel is same as 2 channel amplifier STK401 − 010 series which is same output.

7997076 0012916 239

■STK4102 II series／STK4201 II series／STK4121 V series／STK4141 X series／STK4196 X series

Type Number	Output power Po[W]	THD[%]	Vcc max[V]	Vcc [V] $R_L = 8\Omega$	Vcc [V] $R_L = 4\Omega$	Equivalent circuit	Case outline	Features
STK4102 II	6 + 6	0.4	± 20.5	± 13.2	± 12.0	Fig.23	64×31×8.5 (No. 4083)	◆2ch. /1package ◆±Power supply ◆Built-in muting circuit ◆Pin-compatible ◆R_L=2Ω (STK4196X series)
STK4112 II	10 + 10		± 26.0	± 17.0	± 14.0			
STK4122 II	15 + 15		± 30.5	± 20.0	± 17.0			
STK4132 II	20 + 20		± 34.5	± 23.0	± 20.0			
STK4142 II	25 + 25		± 39.0	± 26.0	± 22.0		64×36.5×8.5 (No. 4040)	
STK4152 II	30 + 30		± 42.0	± 27.5	± 25.0			
STK4162 II	35 + 35		± 45.0	± 30.0	± 27.0			
STK4172 II	40 + 40		± 48.0	± 32.0	± 29.0			
STK4182 II	45 + 45		± 50.0	± 33.5	± 30.5			
STK4192 II	50 + 50		± 52.5	± 35.0	± 31.0			
STK4201 II	60 + 60	0.4	± 55.0	± 38.0	–	Fig.24	78×44×9 (No. 4086A)	
STK4211 II	70 + 70		± 60.0	± 42.0	–			
STK4221 II	80 + 80		± 65.0	± 45.0	–			
STK4231 II	100 + 100		± 75.0	± 51.0	–			
STK4241 II	120 + 120		± 77.0	± 53.0	–			
STK4121 V	15 + 15	0.08	± 32.0	± 21.5	± 19.0	Fig.25	64×36.5×8.5 (No. 4040)	
STK4131 V	20 + 20		± 36.0	± 24.5	± 22.0			
STK4141 V	25 + 25		± 40.5	± 27.0	± 24.0			
STK4151 V	30 + 30		± 42.0	± 28.0	± 25.0			
STK4161 V	35 + 35		± 46.0	± 30.5	± 26.5			
STK4171 V	40 + 40		± 49.0	± 32.5	± 28.0			
STK4181 V	45 + 45		± 51.0	± 34.0	± 30.0			
STK4191 V	50 + 50		± 53.0	± 35.5	± 32.0			
STK4201 V	60 + 60		± 57.0	± 39.0	–	Fig.26	78×44×9 (No. 4086A)	
STK4211 V	70 + 70		± 62.0	± 43.0	–			
STK4221 V	80 + 80		± 65.0	± 45.0	–			
STK4231 V	100 + 100		± 75.0	± 51.0	–			
STK4241 V	120 + 120		± 78.0	± 54.0	–			
STK4141 X	25 + 25	0.02	± 41.0	± 27.5	± 24.5	Fig.27	105×32×8.5 (No. 4146)	
STK4151 X	30 + 30		± 42.5	± 29.0	± 25.5			
STK4171 X	40 + 40		± 49.5	± 33.0	± 28.5			
STK4191 X	50 + 50		± 53.5	± 36.0	± 32.5			
STK4201 X	60 + 60		± 57.5	± 39.5	–			
STK4211 X	70 + 70		± 62.5	± 43.5	–			
STK4196 X	50 + 50	0.05	± 53.5	–	± 29.0	Fig.28		
STK4216 X	70 + 70		± 62.5	–	± 34.0			

【Pin – compatibility of Output pins】

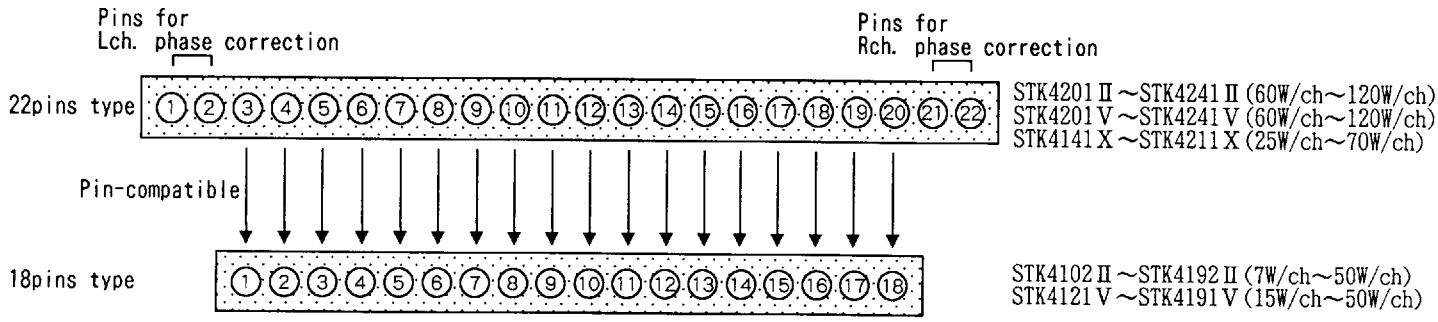

7997076 0012917 175

■ Equivalent Circuit

Figure 1 STK4144MK2 to STK4194MK2

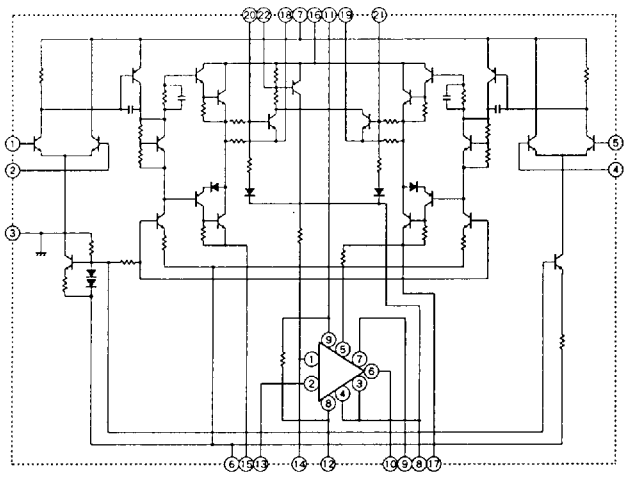

Figure 2 STK4204MK2 to STK4234MK2

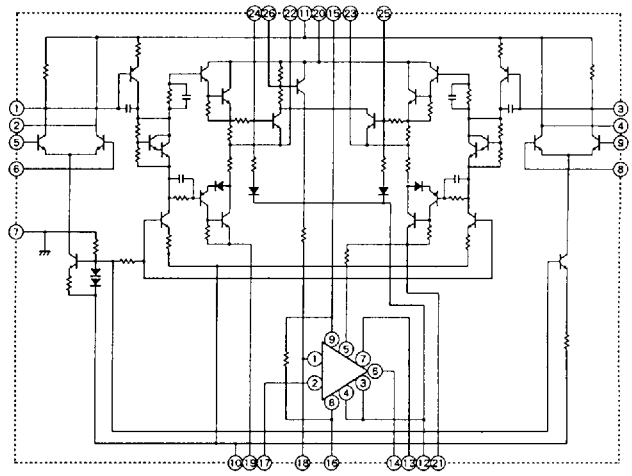

Figure 3 STK4144MK5 to STK4194MK5

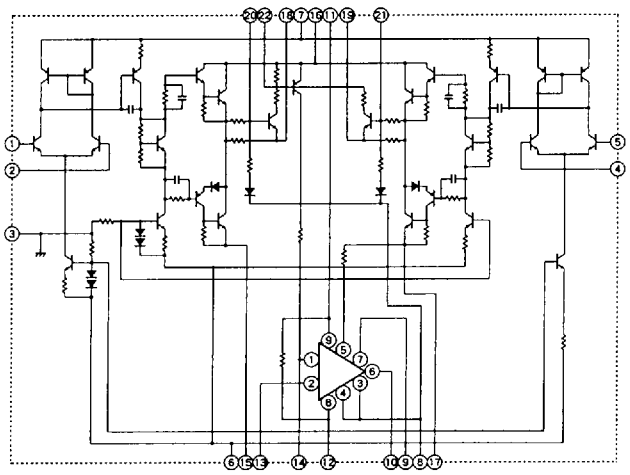

Figure 4 STK4204MK5 to STK4234MK5

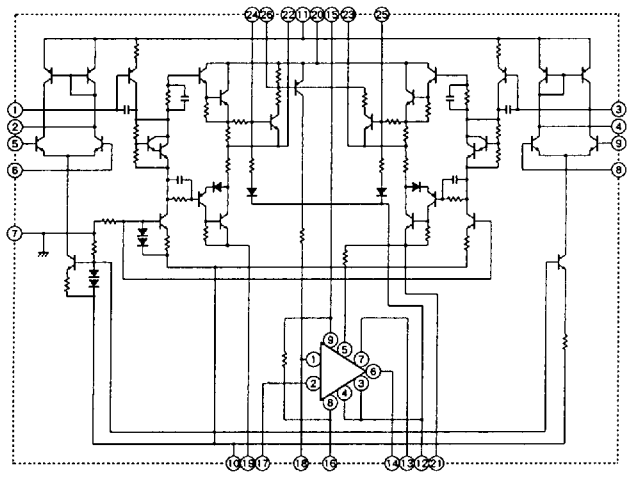

Figure 5 STK4145MK2 to STK4195MK2

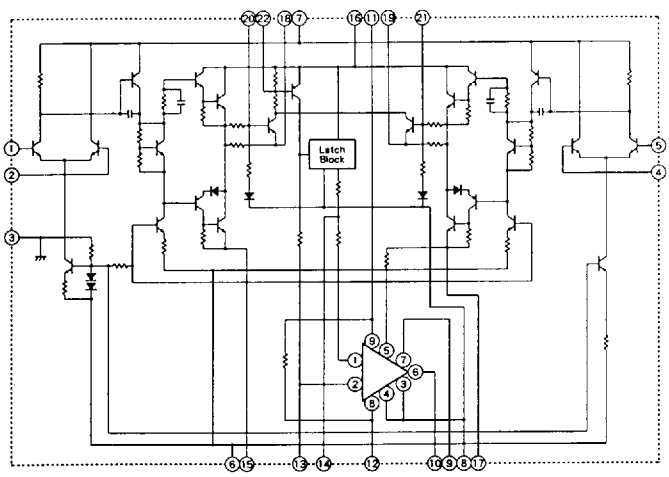

Figure 6 STK4205MK2 to STK4235MK2

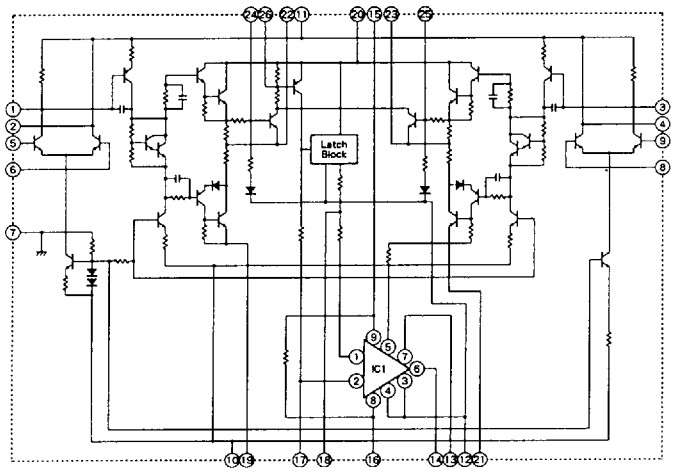

7997076 0012918 001

Figure 7 STK4145MK5 to STK4195MK5

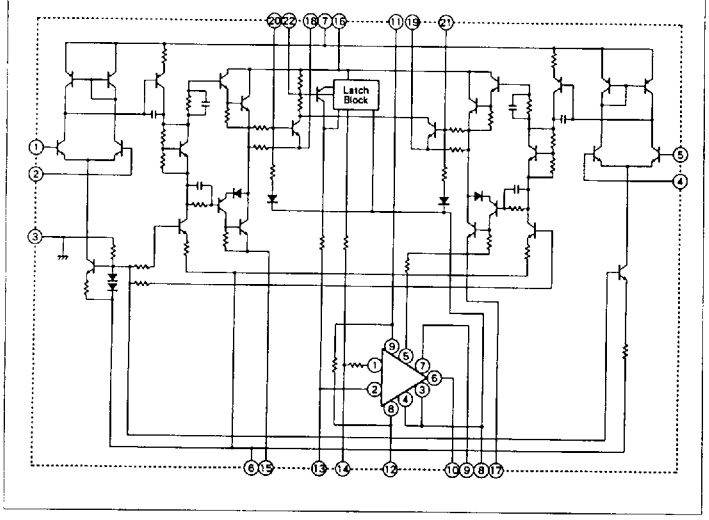

Figure 8 STK4205MK5 to STK4235MK5

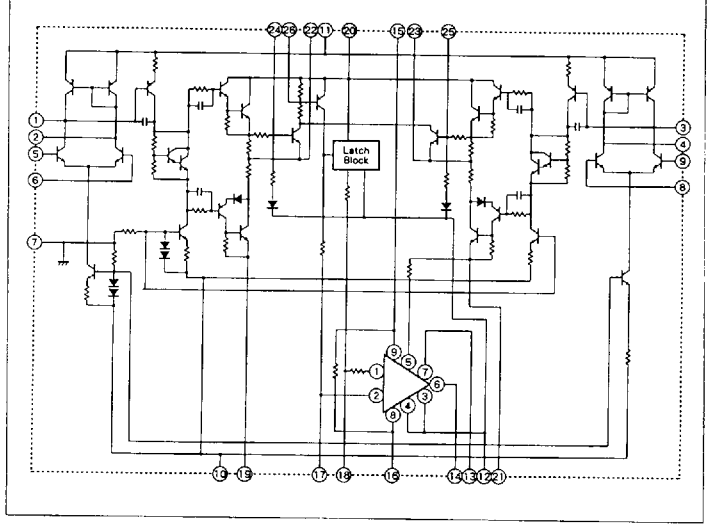

Figure 9 STK401 – 010 to STK401 – 090

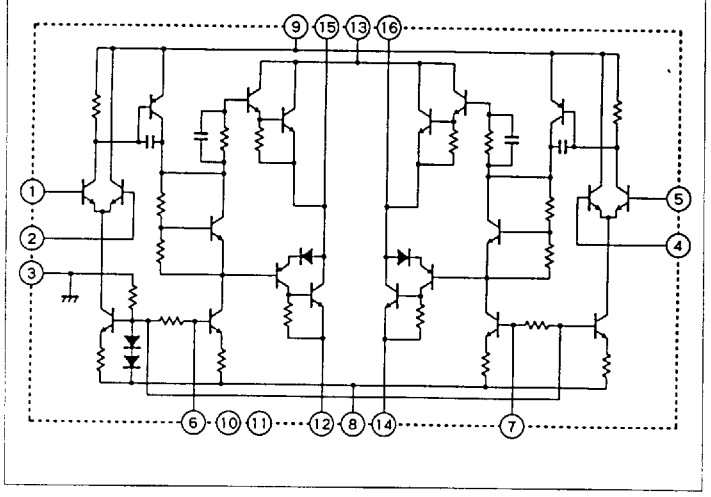

Figure 10 STK401 – 100 to STK401 – 120

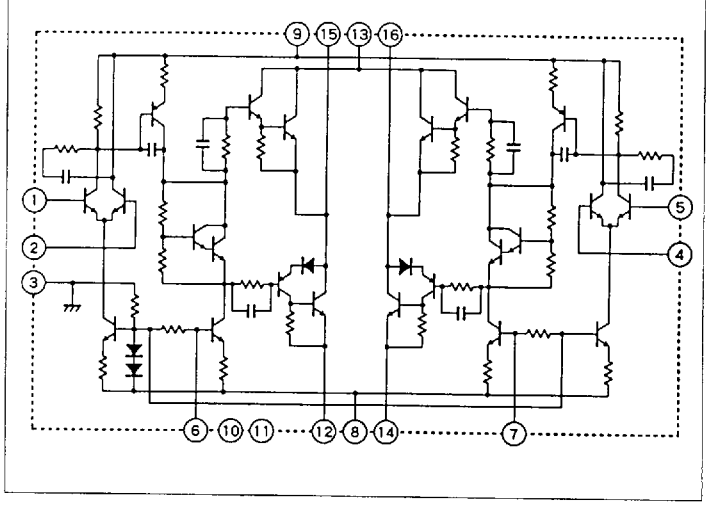

Figure 11 STK401 – 130 , STK401 – 140

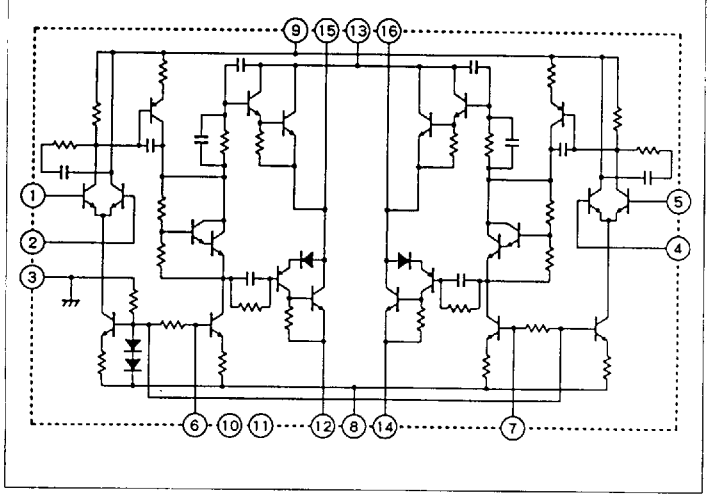

Figure 12 STK401 – 210 to STK401 – 290

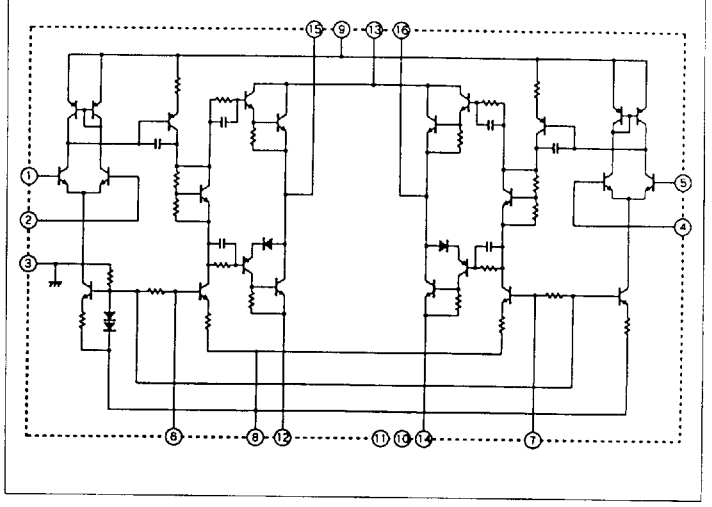

7997076 0012919 T48

■ Equivalent Circuit

Figure 13 STK401 - 300 to STK401 - 310

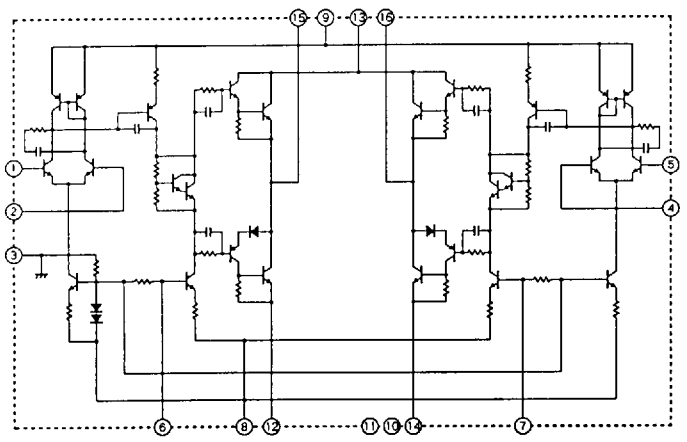

Figure 14 STK401 - 320 to STK401 - 340

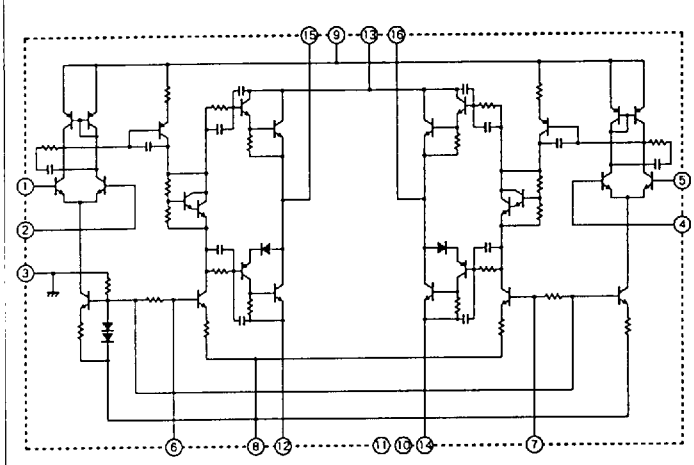

Figure 15 STK400 - 010 to STK400 - 090 , STK400 - 450 to STK400 - 490

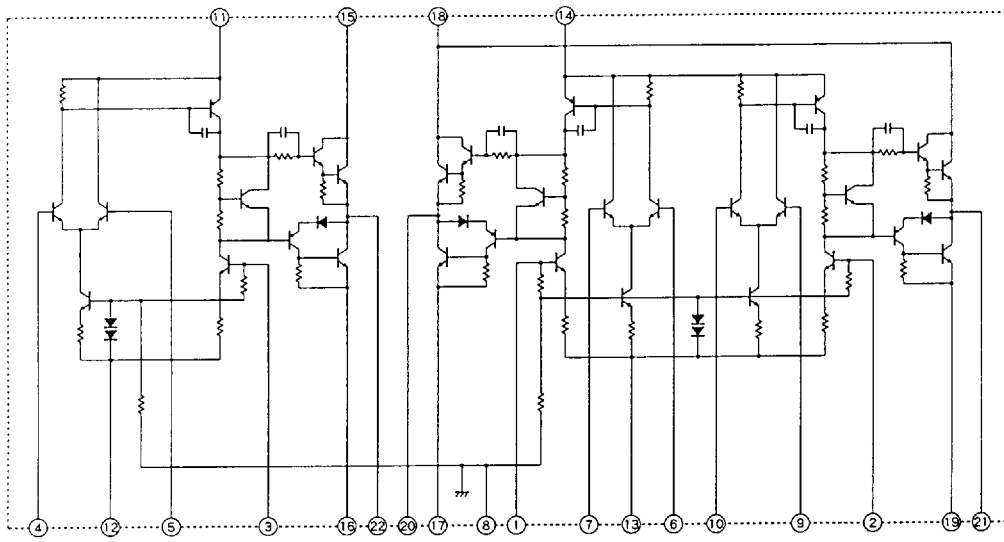

Figure 16 STK400 - 100 , STK400 - 110

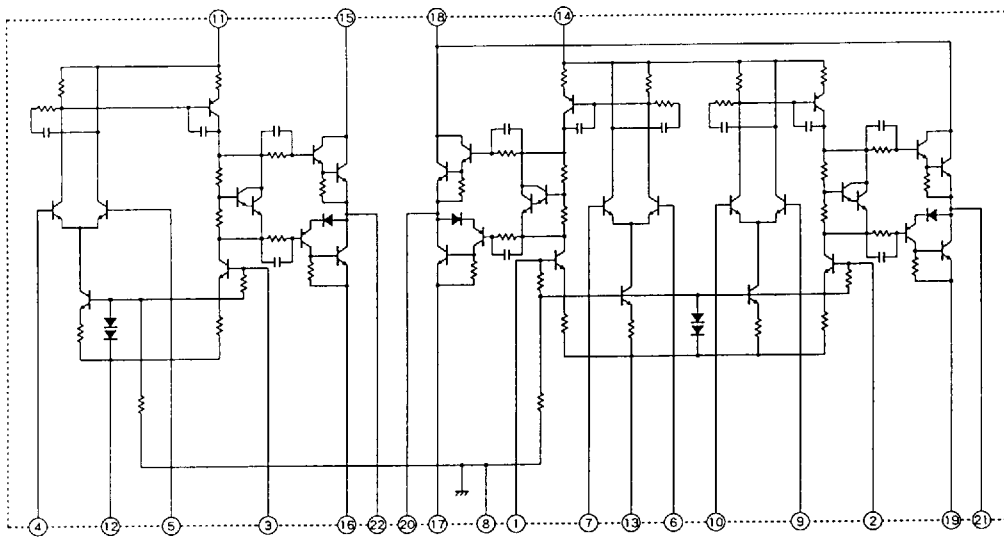

7997076 0012920 76T

Figure 17 STK400 - 210 to STK400 - 290 , STK400 - 650 to STK400 - 690

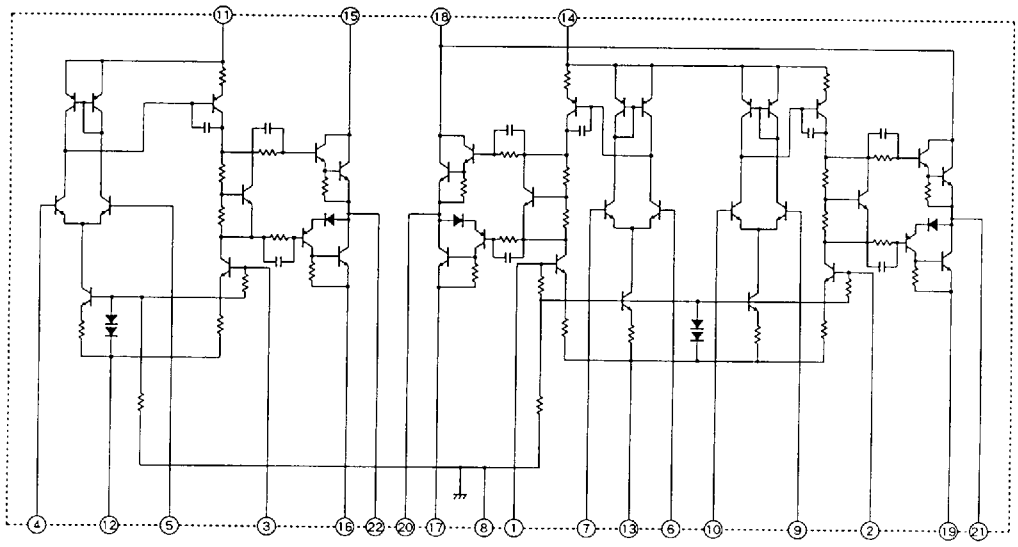

Figure 18 STK400 - 300 , STK400 - 310

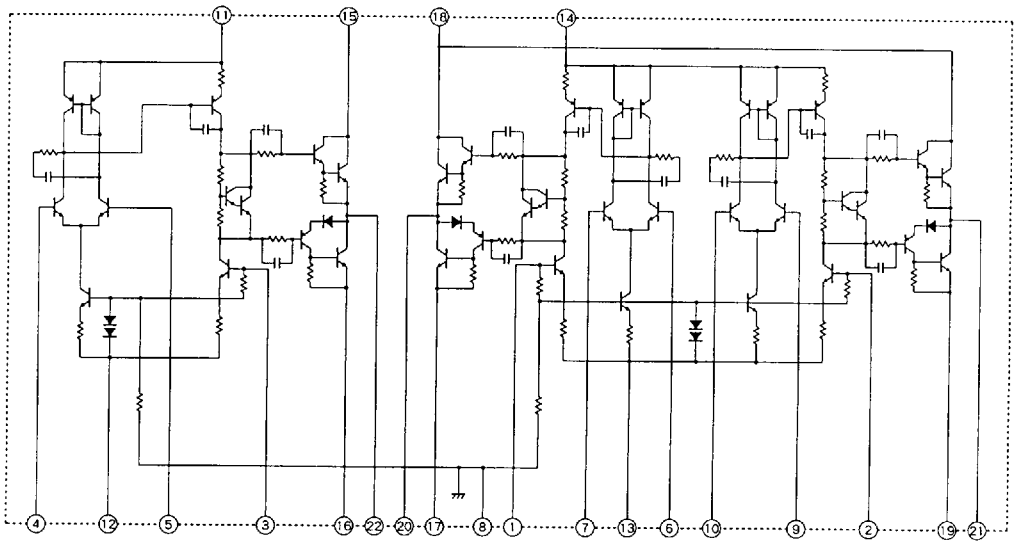

Figure 19 STK400 - 500 to STK400 - 520

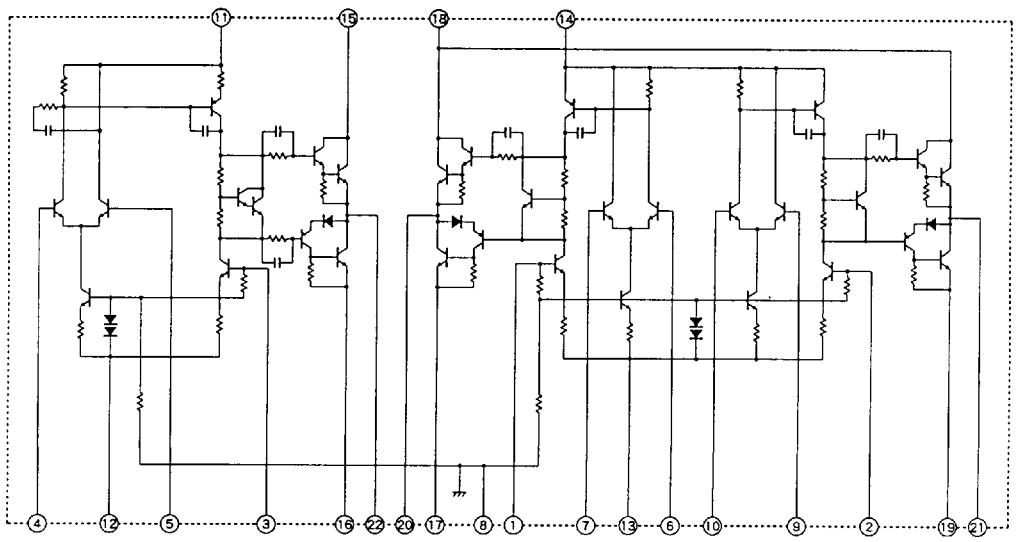

7997076 0012921 6T6

■ Equivalent Circuit

Figure 20 STK400 – 530

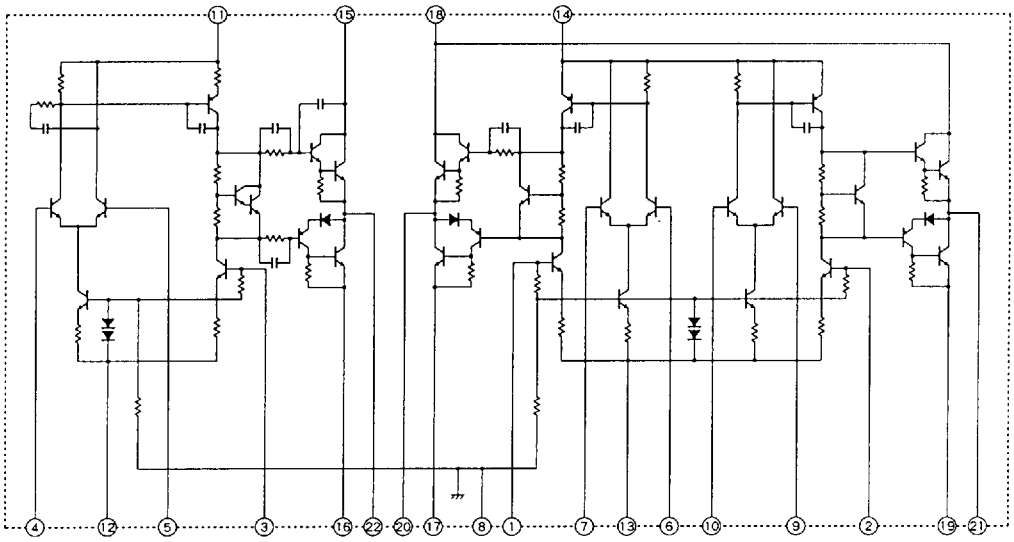

Figure 21 STK400 – 700 , STK400 – 710

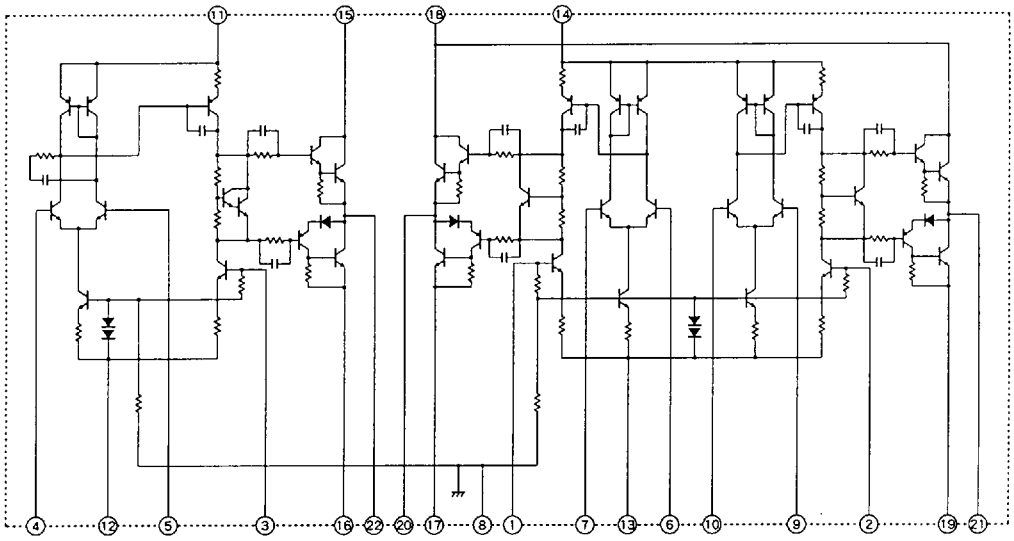

Figure 22 STK400 – 720 , STK400 – 730

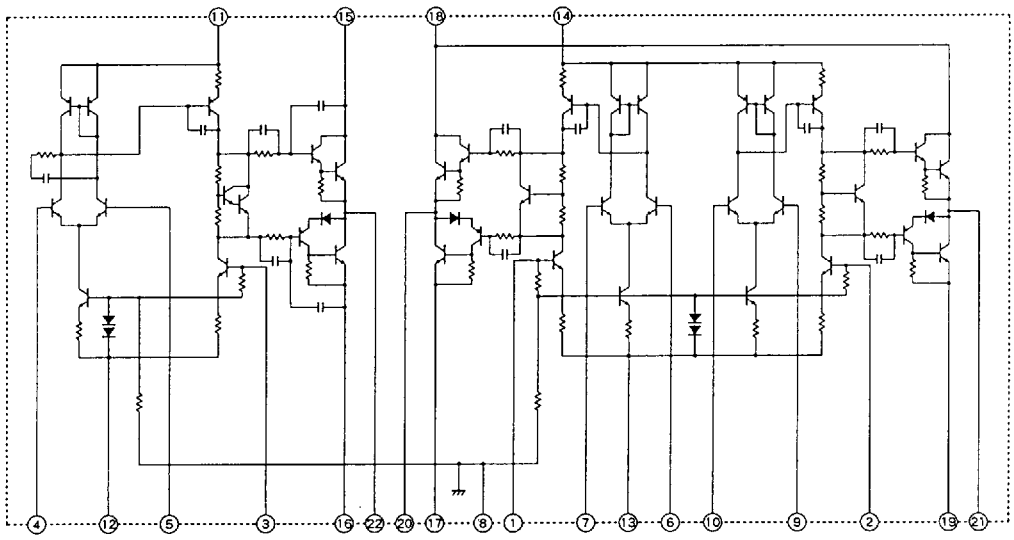

7997076 0012922 532

Figure 23 STK4102 II to STK4192 II

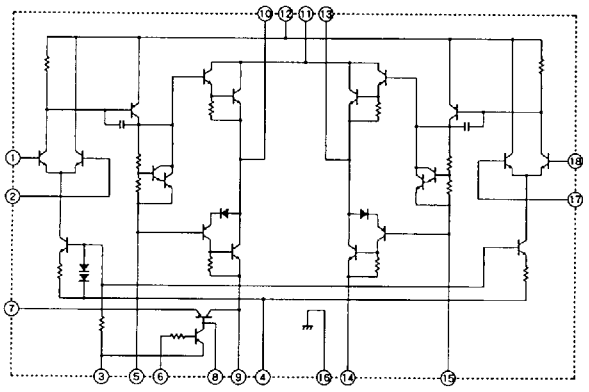

Figure 24 STK4201 II to STK4241 II

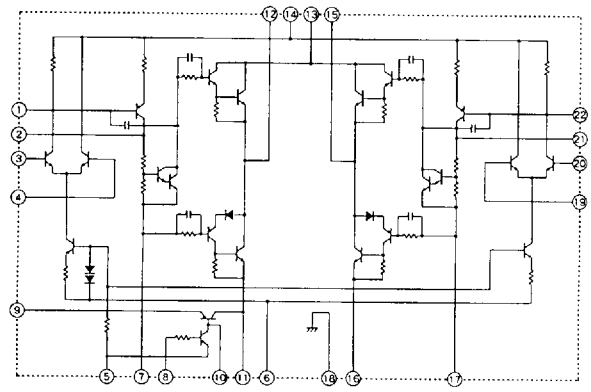

Figure 25 STK4121 V to STK4191 V

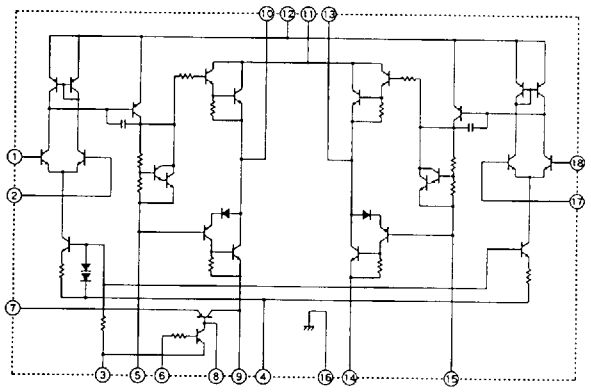

Figure 26 STK4201 V to STK4241 V

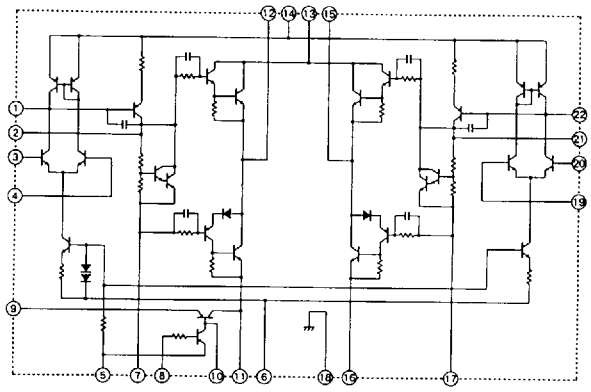

Figure 27 STK4141 X to STK4211 X

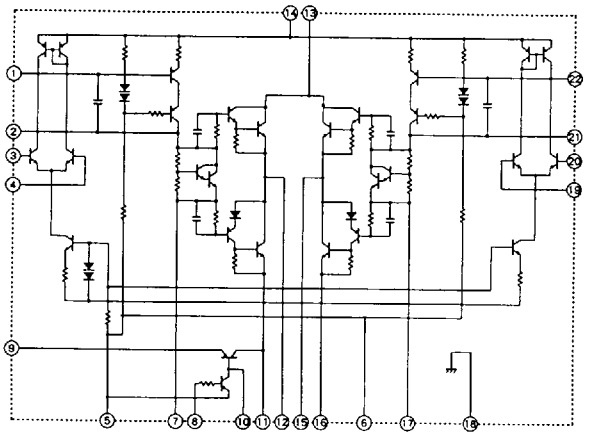

Figure 28 STK4196 X to STK4216 X

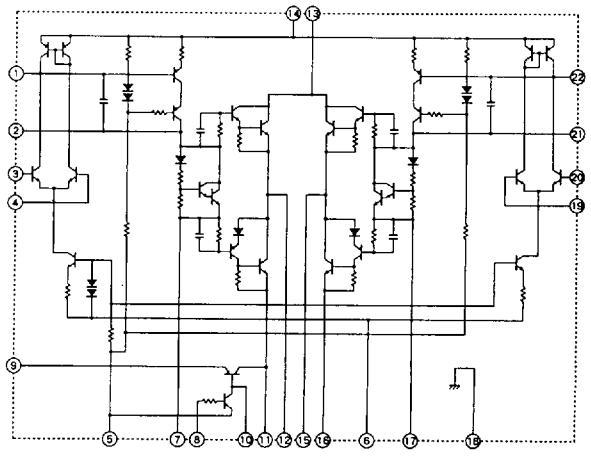

7997076 0012923 479

■ Case Outline

No. 4021C

Unit ; mm

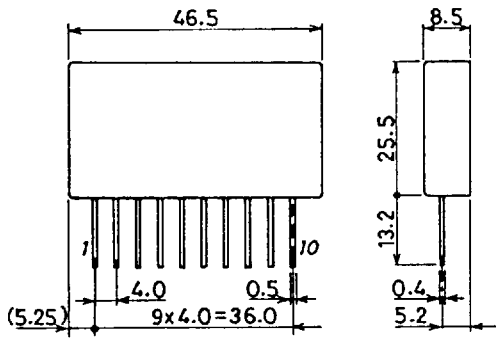

No. 4029

Unit ; mm

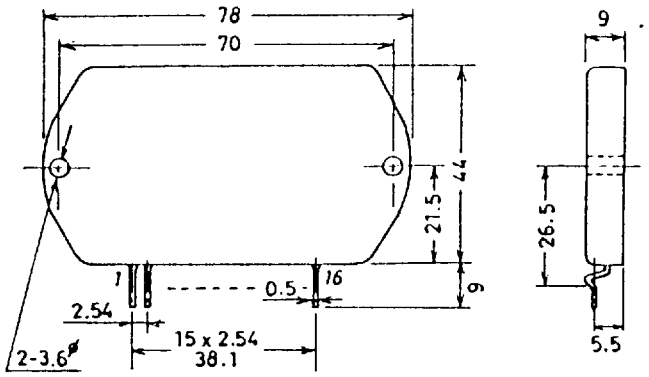

No. 4032A

Unit ; mm

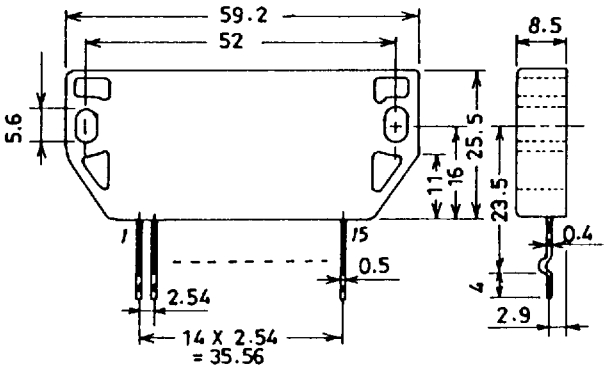

No. 4033

Unit ; mm

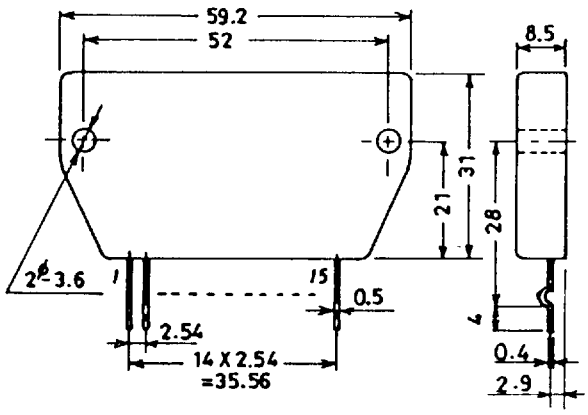

No. 4040

Unit ; mm

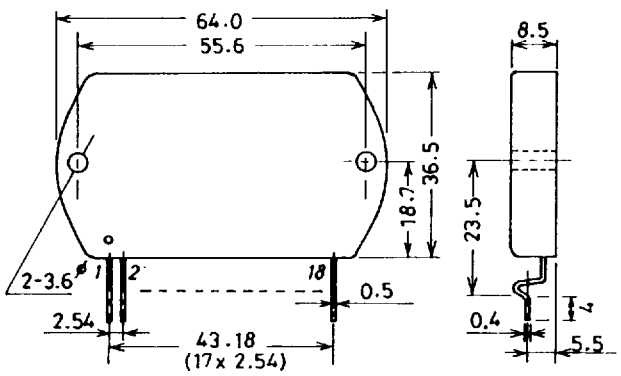

No. 4051A

Unit ; mm

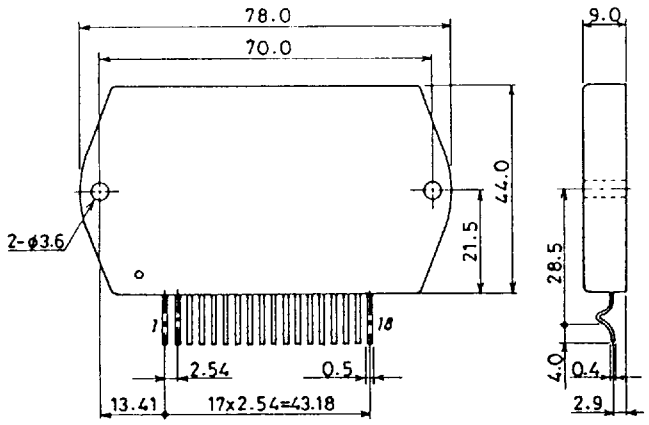

7997076 0012924 305

No. 4062

Unit ; mm

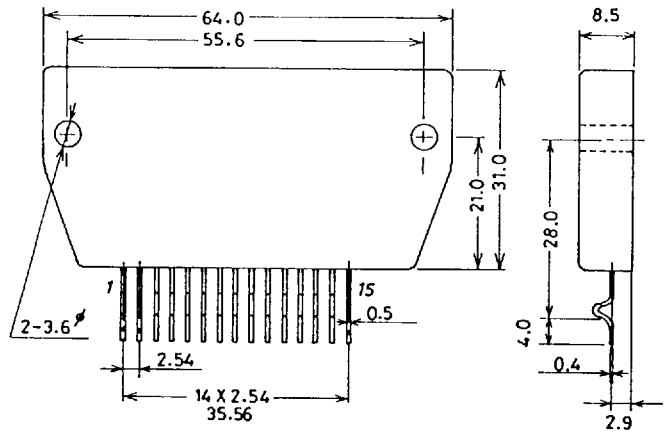

No. 4070

Unit ; mm

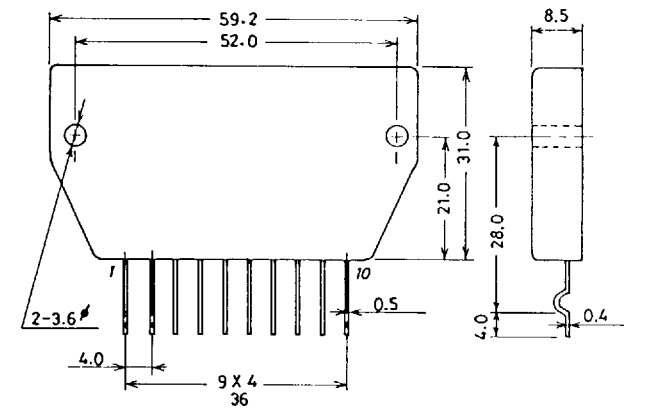

No. 4075

Unit ; mm

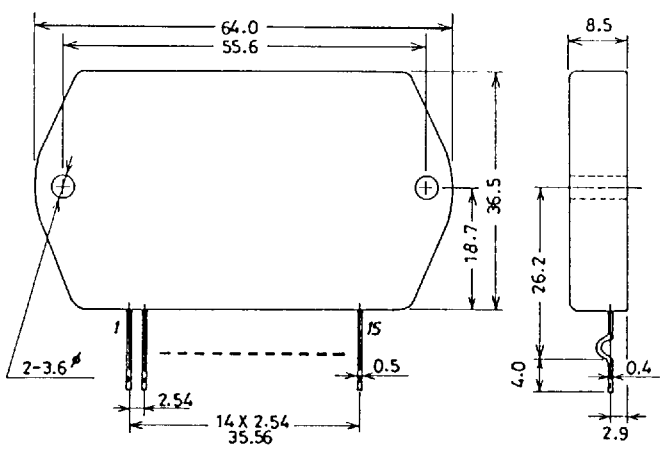

No. 4081

Unit ; mm

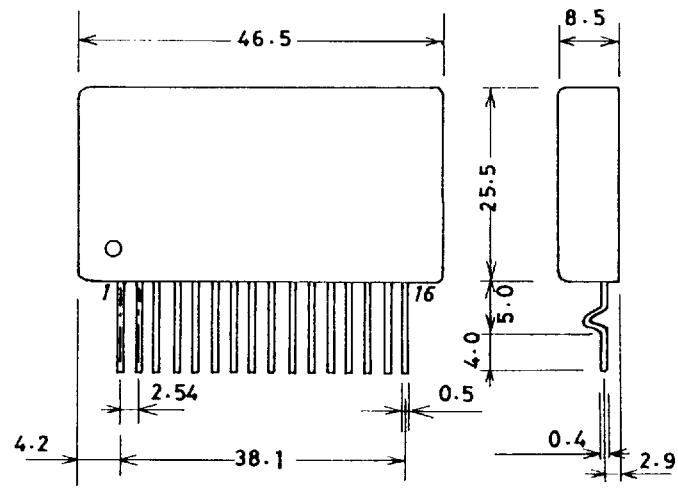

No. 4083

Unit ; mm

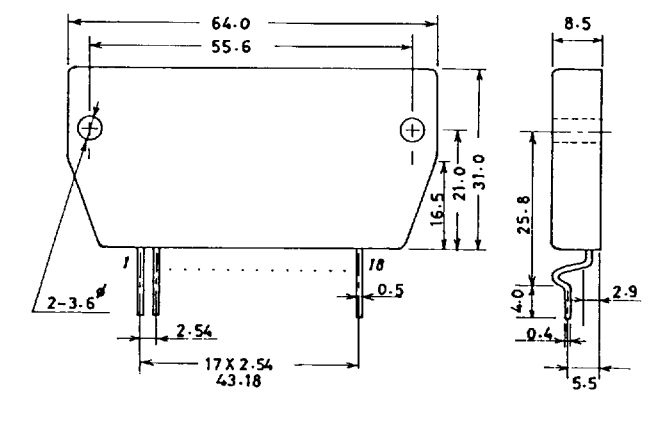

No. 4086A

Unit ; mm

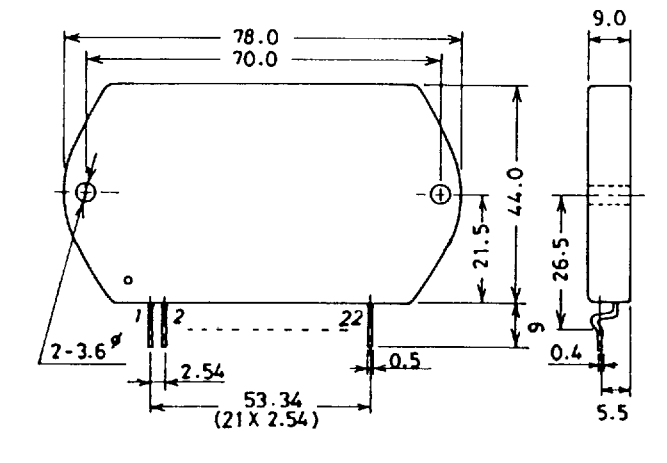

7997076 0012925 241

Case Outline

No. 4110A

Unit ; mm

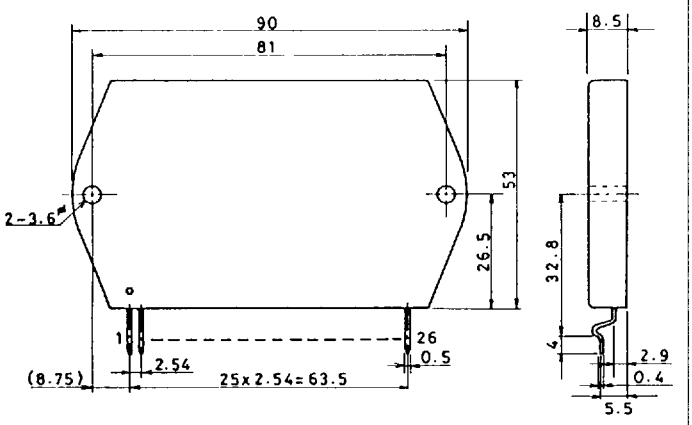

No. 4131

Unit ; mm

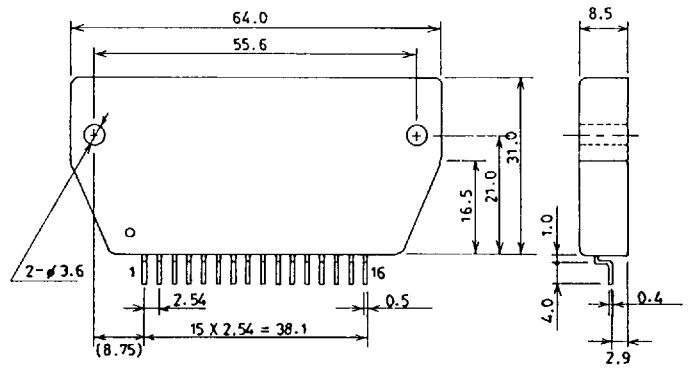

No. 4134

Unit ; mm

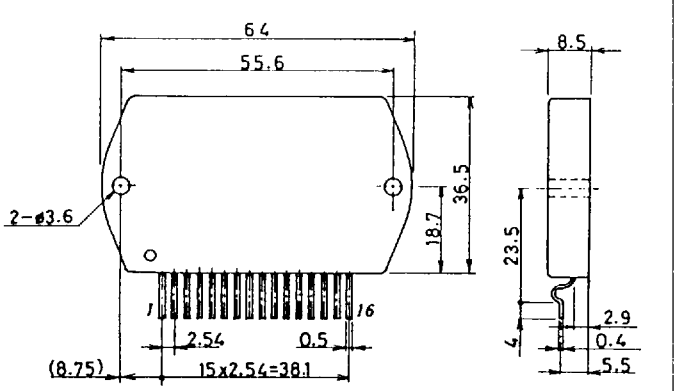

No.4145

Unit ; mm

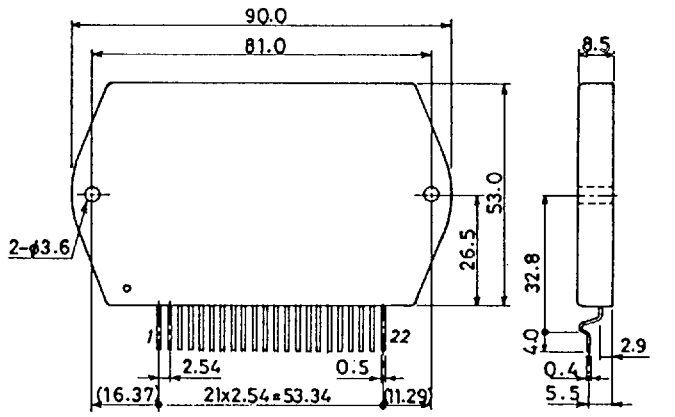

No.4146

Unit ; mm

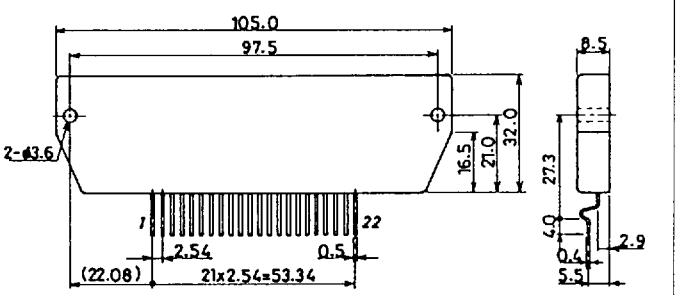

No.4147

Unit ; mm

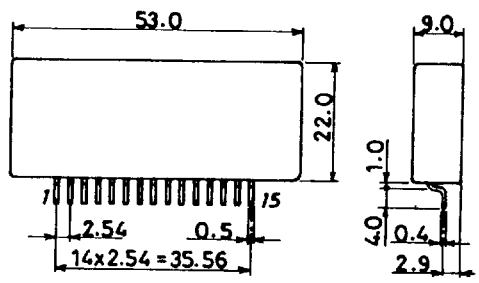

7997076 0012926 188