Switchgear Type 8DJ20 up to 24 kV, Gas-Insulated

Medium-Voltage Switchgear

Catalog HA 45.31 · 2008

www.siemens.com/energy

SIEMENS

Contents

For further information, please refer to

- Catalog HA 40.1:
  Switchgear Types 8DJ and 8DH, General Part
- HA 45.31/41.11:
  Supplements to Switchgear Types 8DJ and 8DH

Invalid: Catalog HA 45.31 · 2006

The products and systems described in this catalog are manufactured and sold according to a certified quality and environmental management system (acc. to ISO 9001 and ISO 14001).
(DQS Certificate Reg. No. DQS 003473 QM UM).
The certificate is accepted in all IQNet countries.

Application, Requirements

Features

8DJ20 switchgear is a factory-assembled, type-tested, metal-enclosed switchgear for indoor installation.

Typical uses

8DJ20 switchgear is used for power distribution in substations – even under severe environmental conditions, such as:

- Industrial environments
- Damp, sandy or dusty areas
- Simple outdoor substations

Main uses

- Compact substations
- Compact transformer substations, e. g. for wind power stations
- Garage and vault substations
- Underground and underfloor substations
- Sidewalk substations, e.g. containing switchgear with a very small overall width – in particular the basic versions of schemes 10, 32 and 71 – in conurbations
- Substations with control aisle

Technology

- Switchgear design with up to 5 feeders
- Maintenance-free
- Climate-independent
- Partition class: PM (metallic partition)
- Three-pole primary enclosure, metal-enclosed
- Insulating gas SF_6
- Welded switchgear vessel without seals, made of stainless steel, with welded-in bushings for electrical connections and mechanical components
- Three-position switch-disconnector with load-break and make-proof earthing function
- Cable connection for bushings with outside cone
- Connection with cable plugs
  – In ring-main feeders with bolted contact (M16)
  – In transformer feeders with plug-in contact
- Option: Connection with conventional sealing ends
  – For thermoplastic-insulated cables via elbow adapter AKE 20/630 (make Siemens)
  – For paper-insulated mass-impregnated cables via commercially available adapter systems
- Easy installation

Personal safety

- Safe-to-touch and hermetically-sealed primary enclosure
- HV HRC fuses and cable sealing ends are only accessible when outgoing feeders are earthed
- Operation only possible when enclosure is closed
- Logical mechanical interlocking
- Capacitive voltage detecting system to verify safe isolation from supply
- Feeder earthing by means of make-proof earthing switches

Security of operation

- Hermetically-sealed primary enclosure independent of environmental effects such as pollution, humidity and small animals – sealed for life:
  – Welded switchgear vessel
  – Welded-in bushings and operating mechanism
- Operating mechanism parts maintenance-free (IEC 62 271-1/VDE 0671-1)
- Operating mechanisms of switching devices located outside the switchgear vessel (primary enclosure)
- Switchgear interlocking system with logical mechanical interlocks

Cost-efficiency

Extremely low "life-cycle costs" throughout the entire product service life as a result of:

- Maintenance-free concept
- Climatic independence
- Minimum space requirements
- Maximum availability

Standards

see page 21

Features

Our product range extends from switchgear installed in a radial transformer panel (individual panel) to switchgear with 5 feeders, consisting of

- Ring-main feeders
- Transformer feeders with HV HRC fuse assemblies
- Circuit-breaker feeders (for the complete product range see Supplements to Catalogs HA 45.31/41.11 – 2006)

The switchgear is available in three overall heights:

- 1200 mm (with low subframe)
- 1400 mm and 1760 mm (with high subframe)

These overall heights cover all areas of application, from compact substations to switchgear rooms with control aisle.

Basic design

- Manual operating mechanism
- Transformer cable connection at the front (standard)
- With logical mechanical interlocks
- With ready-for-service indicator
- With capacitive voltage detecting system at the ring-main feeders

Options (others on request)

- Capacitive voltage detecting system at the transformer feeders
- Motor operating mechanisms for the three-position switch-disconnectors
- Auxiliary switch for three-position switch-disconnector and make-proof earthing switch
- Short-circuit indicator with built-in housing
- Surge arresters for ring-main feeders
- Shunt releases for transformer feeders
- Secondary equipment for remote operation or remote indication, e.g. with local-remote switch in the case of motor operating mechanisms or "tripped signal" in the case of transformer feeders
- Locking devices
- Closing lock-out
- De-earthing lock-out
- Cable clamps

Typical use

R-HA45-099c.eps

Radial transformer panel

1 transformer feeder
1 radial cable connection

Scheme 01

R-HA45-100b.eps

Ring-main/ transformer block

2 ring-main feeders
1 transformer feeder

Scheme 10

R-HA45-101c.eps

Ring-main/ transformer block

3 ring-main feeders
2 transformer feeders

Scheme 82

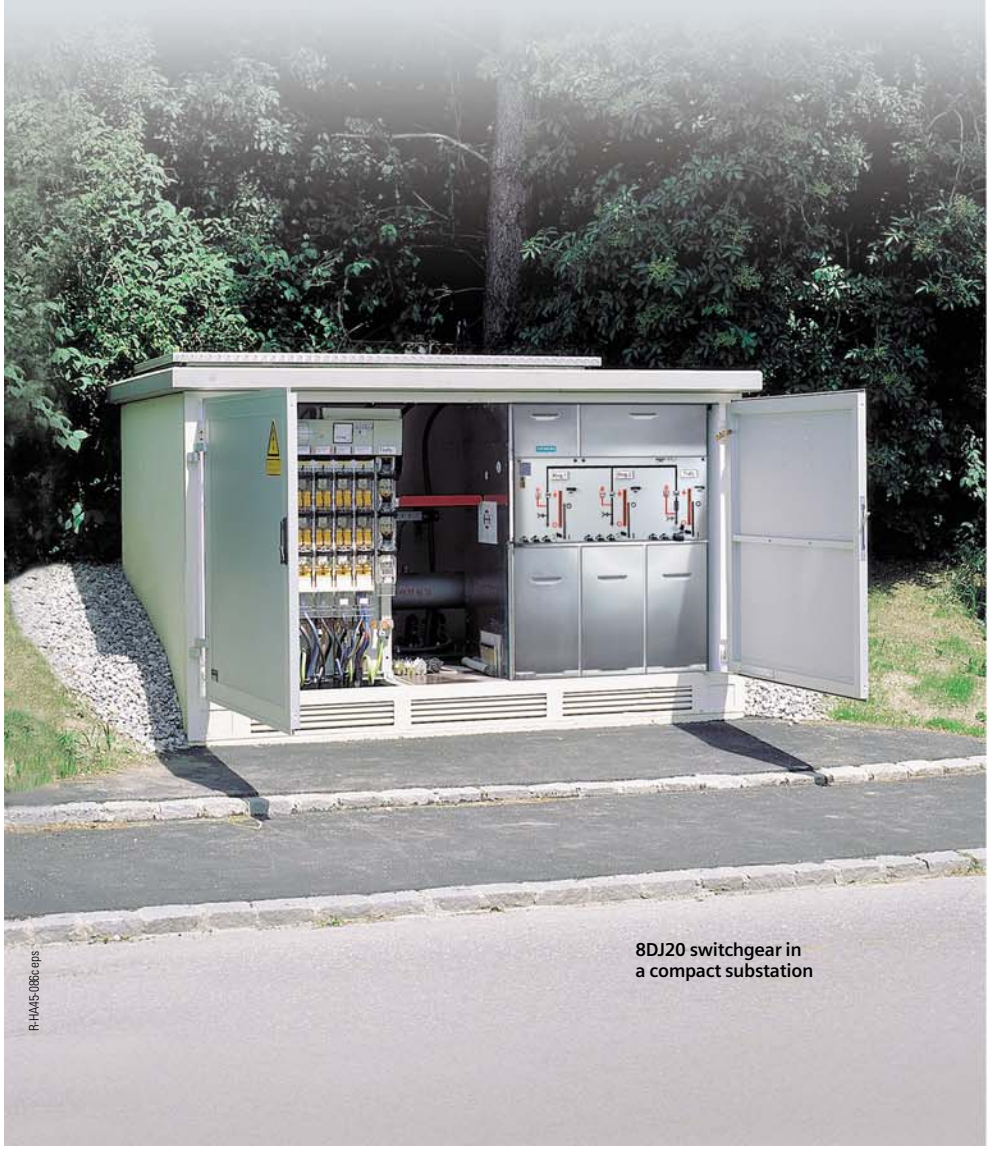

R-HA45-086c.eps

8DJ20 switchgear in a compact substation

Technical Data, Product Range

Electrical data, temperature, filling pressure

Rated voltage U_r	kV	7.2	12	15	17.5	24
Rated insulation level						
Rated short-duration power-frequency withstand voltage U_d	kV	20	28 1)	36	38	50
Rated lightning impulse withstand voltage U_p	kV	60	75 1)	95	95	125
Rated frequency f_r		50/60 Hz →				
Rated normal current I_r						
for ring-main feeders		400 or 630 A →				
for transformer feeders depending on the HV HRC fuse link		200 A →				
for schemes 01 and 21 depending on the HV HRC fuse link		200 A →				
Rated short-time withstand current I_k						
at 1 s	kA	–	–	–	16	16
	kA	20	20	20	20	20
	kA	25	25	25	25	–
at 3 s (option)	kA	20	20	20	20	20
Rated peak withstand current I_p	kA	–	–	–	40	40
	kA	50	50	50	50	50
	kA	63	63	63	63	–
Rated short-circuit making current I_{ma}						
for transformer feeders	kA	25	25	25	25	25
for ring-main feeders	kA	–	–	–	40	40
	kA	50	50	50	50	50
	kA	63	63	63	63	–
Ambient air temperature T (operating conditions acc. to IEC 62 271-200/Clause 2 or IEC 62 271-1)						
– Without secondary equipment		- 40 to + 70 °C 5) →				
– With secondary equipment, class "Minus 5 indoor"		- 5 to 55 °C 5) →				
Pressure values at 20 °C for the insulation:						
Rated filling level p_{re}		1500 hPa (absolute) →				
Minimum functional level p_{me}		1300 hPA (absolute) →				

1) According to some national requirements, higher values of the rated short-duration power-frequency withstand voltage available for I_k = 20 kA with:
– 42 kV for phase-to-phase, phase-to-earth and open contact gap as well as
– 48 kV across the isolating distance

Higher values of the rated lightning impulse withstand voltage:
– 95 kV for phase-to-phase, phase-to-earth and open contact gap as well as
– 110 kV across the isolating distance

2) For overall height of switchgear 1200 mm: Cable bracket below the feeder

3) Cable fixing by customer (the switchgear is supplied without cable bracket)

4) In case of scheme 01 the cable compartment cover is bolted. The transformer connection is effected via the bushings arranged underneath the switchgear vessel. The transformer feeder is earthed by the three-position switch

5) Temperature range, reduced normal currents at ambient air temperatures > + 40 °C

6) Surge arrester type RDA with RICS (Tyco Electronics) not possible for a height of 1200 mm

o. r. = on request

Equipment features of panels

• Basic equipment
o Additional equipment (option), further additional equipment on request
x Not applicable
– Not available

Equipment	Radial cable connection, panel K(E) for scheme 21 (with additional earthing switch)	Radial cable connection, panel K for scheme 02 (without earthing switch)	Ring-main feeders panel RK	Transformer feeder panel TT in scheme 01	Transformer feeders panel T
Manual operating mechanism for three-position switch-disconnector:					
– As spring-operated mechanism	•	x	•	–	–
– As spring-operat./stored-energy mech.	–	x	–	•	•
Motor operating mechanism for three-position switch-disconnector	–	x	o	o	o
Interlock for cable compartment cover	•	–	•	•	•
Cable compartment cover locked in place/screwed on	–	•	–	–	–
Cable bracket 2) in ring-main and cable feeders, cable routing downwards	•	•	•	•	x
Cable bracket in transformer feeder: For cable routing					
– Downwards (standard), f. cable elb. plugs	x	x	x	x	•
or – Downwards, for straight cable plugs	x	x	x	•	•
or – To the rear, for cable elbow plugs	x	x	x	without 3)	without 3)
Low-voltage terminals in the operating mechanism (option for secondary equipment)	•	–	•	•	•
Shunt release	–	–	–	o	o
Auxiliary switch for					
– Switch-disconnector CLOSED/OPEN: 1 NO + 2 NC	o	x	o	o	o
– EARTHING CLOSED/OPEN: 1 NO + 1 NC	o	x	o	o	o
Locking device for three-position switch-disconnector	o	x	o	o	o
Short-circuit or earth-fault indicator					
– Wiring at the indicator (standard)	o	o	o	–	–
– Wiring to terminal (option)	o	o	o	–	–
De-earthing lock-out for make-proof earthing switch in transformer feeder	o	x	x	x 4)	o
Closing lock-out for three-position switch-disconnector	–	x	o	–	–
Double cable connection for					
– Overall height of switchgear 1200 mm	o	o	o	x	x
– Overall height of switchgear 1400 mm	o	o	o	x	x
– Overall height of switchgear 1760 mm	o	o	o	x	x
Surge arrester for					
– Overall height of switchgear 1200 mm	–	–	o. r. 6)	x	x
– Overall height of switchgear 1400 mm	o	o	o	x	x
– Overall height of switchgear 1760 mm	o	o	o	x	x
Cable clamps for cable fixing					
– Supplied separately	o	o	o	o	o
– Preassembled (option)	o	o	o	–	o

Radial transformer panels

Scheme Components shown in dotted lines can be used optionally.	Overall dimensions Width mm	Depth 2) 3) mm	Height mm	Net 1) weight approx. kg
Scheme 01 * K Radial cable connection as infeed HA45-2294d eps K T	1 transformer feeder, 1 radial cable connection (Abbreviation 1T)			
	510	775	1200 1400 1760	140 160 200
Scheme 21 K(E) Radial cable connection, K as K(E) with make-proof earthing switch HA45-2293c eps K(E) T	1 radial cable connection, 1 transformer feeder (Abbreviations 1K(E)+1T)			
	710	775	1200 1400 1760	200 210 250

Radial panel

Scheme 02 HA45-2295c eps RK K	1 ring-main feeder with radial cable connection (Abbreviation 1RK)			
	710	775	1200 1400 1760	150 170 210

Block versions, consisting of ring-main and transformer feeders (with HV HRC fuse assembly)

Scheme 10 * HA45-2296c eps RK RK T	2 ring-main feeders, 1 transformer feeder (Abbreviations 2RK+1T)			
	1060	775	1200 1400 1760	280 300 340
Scheme 20 HA45-2298c eps RK T	1 ring-main feeder, 1 transformer feeder (Abbreviations 1RK+1T)			
	710	775	1200 1400 1760	200 210 250
Scheme 71 * HA45-2302c eps RK RK RK T	3 ring-main feeders, 1 transformer feeder (Abbreviations 3RK+1T)			
	1410	775	1200 1400 1760	340 360 400
Scheme 72 HA45-2303c eps RK RK RK RK T	4 ring-main feeders, 1 transformer feeder (Abbreviations 4RK+1T)			
	1760	775	1200 1400 1760	420 440 480
Scheme 81 * HA45-2304c eps T RK RK T	2 ring-main feeders, 2 transformer feeders (Abbreviations 2RK+2T)			
	1410	775	1200 1400 1760	400 420 460
Scheme 82 HA45-2305c eps T RK RK RK T	3 ring-main feeders, 2 transformer feeders (Abbreviations 3RK+2T)			
	1760	775	1200 1400 1760	470 500 540

Block versions, consisting of ring-main feeders (without HV HRC fuse assembly)

Scheme 11 HA45-2297c eps RK RK	2 ring-main feeders (Abbreviation 2RK)			
	710	775	1200 1400 1760	160 170 210
Scheme 32 * HA45-2300c eps RK RK RK	3 ring-main feeders (Abbreviation 3RK)			
	1060	775	1200 1400 1760	210 230 270
Scheme 70 * HA45-2301c eps RK RK RK RK	4 ring-main feeders (Abbreviation 4RK)			
	1410	775	1200 1400 1760	280 300 340
Scheme 84 HA45-2306c eps RK RK RK RK RK	5 ring-main feeders (Abbreviation 5RK)			
	1760	775	1200 1400 1760	350 380 420

1) Depending on the relevant equipment, e.g. motor operating mechanism
2) Additional wall distance required: ≥ 15 mm
3) For cable routing of transformer cables downwards
* Scheme is also suitable for outdoor enclosure (see pages 18 and 19)

Abbreviations:
RK = Ring-main feeder K = Cable feeder T = Transformer feeder
K(E) = Cable feeder for radial cable connection with make-proof earthing switch

Design

Panel design (example)

Ring-main/transformer block

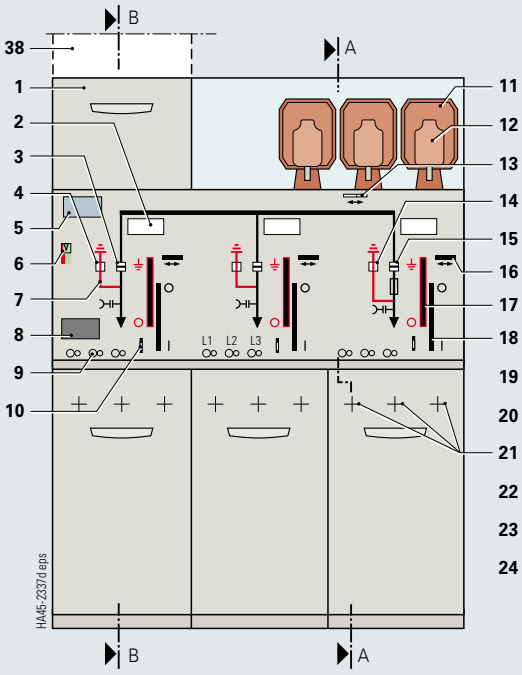

Scheme 10

Transformer feeder

Section A-A

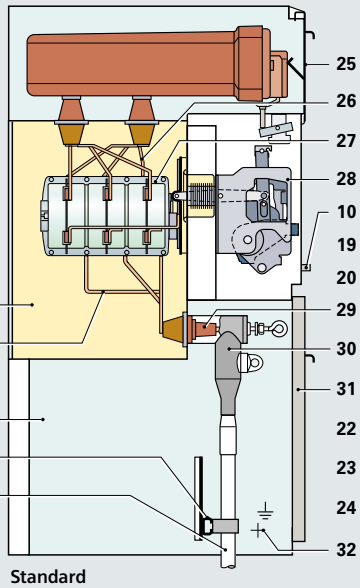

Standard
Cable connection for cable elbow plugs (option: for cable T-plugs), cable routing downwards

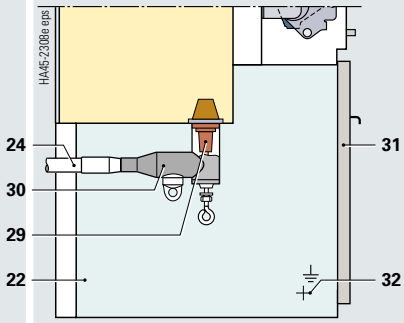

Option
Cable connection for cable elbow plugs, cable routing to the rear (cable fixing by customer)

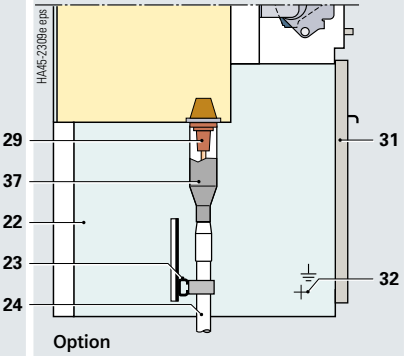

Option
Cable connection for straight cable plugs, cable routing downwards

Ring-main feeder

Section B-B

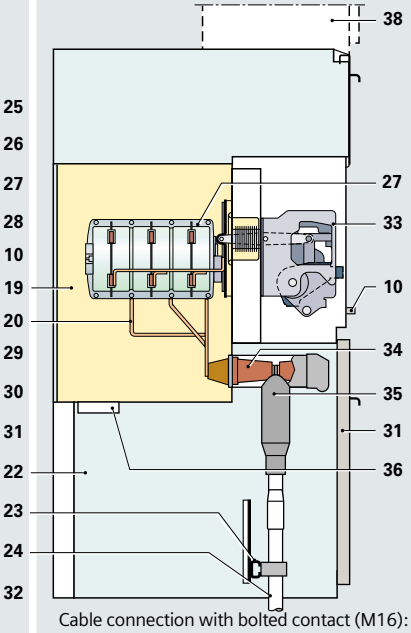

Cable connection with bolted contact (M16):
– For cable T-plug or cable elbow plug
– For conventional cable sealing ends via elbow adapter AKE 20/630

1 Niche for customer-side low-voltage equipment
2 Feeder designation label

Position indicators
in the ring-main feeder:
3 Load-break function "CLOSED – OPEN"
4 Earthing function "OPEN – EARTHED"

5 Rating and type plate
6 Ready-for-service indicator
7 Mimic diagram
8 Short-circuit/earth-fault indicator (option)
9 Sockets for voltage detecting system
10 Interlock of the cable compartment cover
11 HV HRC fuse assembly, cover removed
12 Handle for replacing the HV HRC fuse link
13 Interlock for HV HRC fuse assembly

Position indicators
in the transformer feeder:
14 Earthing function "OPEN – EARTHED"
15 Load-break function "CLOSED – OPEN" with "HV HRC fuse tripped" or "shunt release tripped", where applicable

16 Locking device (option for three-position switch-disconnector)
17 Manual operation for the mechanism of the earthing function
18 Manual operation for the mechanism of the load-break function
19 Switchgear vessel, filled with gas
20 Connecting bar to cable connection
21 Arrangement of cable connections
22 Cable compartment
23 Cable bracket
24 Cable (not included in the scope of supply)
25 Cover of the HV HRC fuse compartment
26 Connecting bar to the bushings for the HV HRC fuse
27 Three-position switch-disconnector
28 Spring-operated/stored-energy mechanism
29 Bushing as interface type "A" for cable plug with plug-in contact
Option: Bushing as interface type "C" for cable plug with bolted contact (M16)
30 Option: Cable elbow plug with plug-in contact
31 Cable compartment cover
32 M12 earthing connection
33 Spring-operated mechanism
34 Bushing as interface type "C" for cable plug with bolted contact (M16)
35 Option: Cable T-plug with bolted contact
36 Pressure relief device
37 Option: Straight cable plug with plug-in contact
38 Option: Low-voltage compartment

Personal safety

All feeder-related covers can only be opened if the associated three-position switch-disconnector has been switched to the "EARTHED" position.

Three-position switch-disconnector

The switching device used is the proven three-position switch-disconnector

Functions

- Load-break function
- Earthing function with short-circuit making capacity
- Switch positions CLOSED – OPEN – EARTHED

Operating mechanisms

The three-position switch-disconnector is operated from the switchgear front via

Detachable lever mechanism (standard)

- Spring-operated mechanism
  – With "spring-operated CLOSED" and "spring-operated OPEN" for installation in ring-main feeders
- Spring-operated/stored-energy mechanism
  – With "spring-operated CLOSED" and "spring-operated OPEN" for installation in transformer feeders
  – With an additional energy store for the function "stored-energy OPEN" after tripping by the HV HRC fuse (striker tripping) or by the shunt release

Options

- Motor operating mechanism for switch-disconnector
- Rotary operating mechanism
- Locking devices
- Auxiliary contacts for three-position switch-disconnector and make-proof earthing switch
- Shunt release for transformer feeders
- Closing lock-out for ring-main feeders
- De-earthing lock-out for transformer feeders
- Different operating levers [1] for the operating mechanisms of the switch-disconnector and of the make-proof earthing switch

1) According to VDN * / VDEW ** recommendation

* Association of German Network Operators VDN e.V. at the VDEW in Germany (as of 2003)

** Association of German Power Stations – VDEW e.V.

Three-position switch-disconnector

R-HA45-102 eps

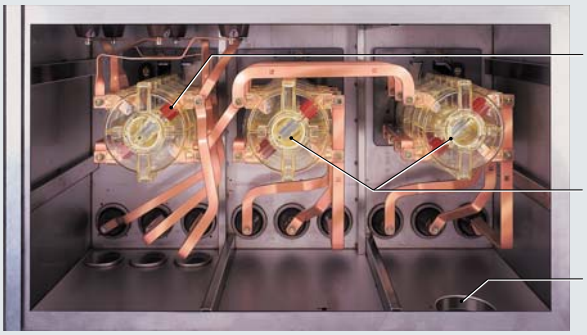

Switchgear vessel of a ring-main/transformer block, scheme 10 (rear view)

1 Three-position switch-disconnector in the transformer feeder

2 Three-position switch-disconnector in the ring-main feeders

3 Pressure relief device

Operating mechanisms

R-HA45-103a eps

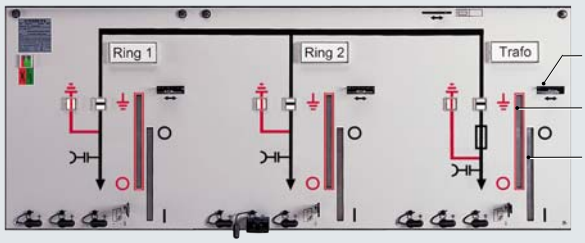

R-HA45-104 eps

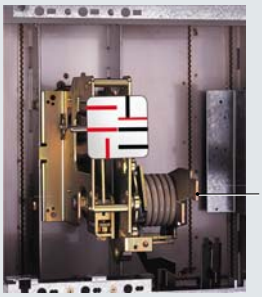

R-HA45-105 eps

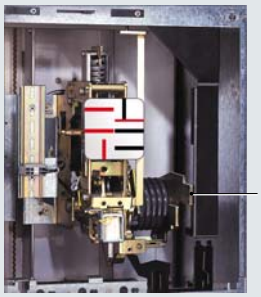

Control board for detachable lever mechanisms (standard)

Example: Ring-main/transformer block, scheme 10

4 Locking device (option) for the detachable lever mechanism

5 Detachable lever operation for the earthing function

6 Detachable lever operation for the load-break function

7 Detachable lever mechanism for the ring-main feeder

8 Detachable lever mechanism for the transformer feeder

R-HA45-106a eps

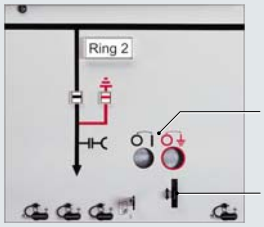

R-HA45-107 eps

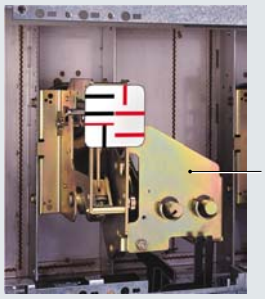

Control board for rotary operating mechanisms (option)

Example: Ring-main feeder

9 Symbols for the actuating direction of the rotary operating mechanism

10 Locking device for the rotary operating mechanism

11 Rotary operating mechanism (option)

Components

HV HRC fuse assembly, secondary equipment, pressure absorber system

HV HRC fuse assembly

The HV HRC fuse boxes are single-phase insulated and located above the transformer feeder outside the switchgear vessel.

Standards (see page 21)

HV HRC fuse links with striker in "medium" version according to

- IEC 60 282-1
- VDE 0670 Parts 4 and 402
- DIN 43 625 main dimensions

Features

- Requirements fulfilled as HV alternating current switch-fuse combination
- Selection of HV HRC fuses for transformers
- For further features see Catalog HA 40.1

Secondary equipment (option)

- Auxiliary switches, motor operating mechanisms or shunt releases wired to a terminal strip
- Location of the terminal strip next to the operating mechanism module of the feeder concerned
- Customer-side cable routing to the terminal strip from the side or rear

Pressure absorber system (option)

- Maintenance-free
- For all schemes (except radial transformer panel, scheme 01)
- For rated short-time withstand current $I_k \leq 16$ kA, with IAC (internal arc classification, see page 22)
- With 105 mm deep pressure relief duct for pressure relief upwards
- For overall height of switchgear:
  – Standard: 1400 mm
  – Option: 1760 mm
- For wall-standing arrangement
- Transformer cable routing:
  – Standard: Downwards
  – Option: To the rear for schemes 10, 71 and 72
- Weight approx. 110 kg

HV HRC fuse compartment

HV HRC fuse compartment with cable compartment cover removed

Phase L1:
HV HRC fuse box with HV HRC fuse slide removed

Phase L2:
HV HRC fuse box closed

Phase L3:
Replacement of HV HRC fuses

Secondary equipment (option)

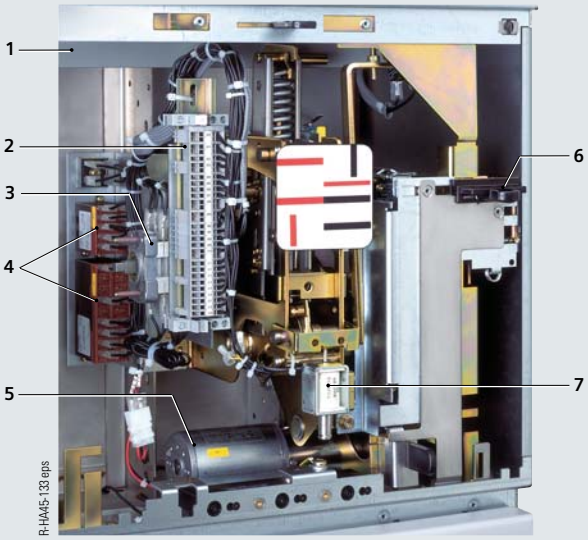

Auxiliary switch, motor operating mechanism and shunt release

Example: Transformer feeder

1 Wiring duct
2 Terminal strip
3 Auxiliary switch at spring-operated mechanism of a ring-main feeder
4 Auxiliary contactors (standard for motor operating mechanism)
5 Motor operating mechanism at spring-operated/stored-energy mechanism
6 Locking device (standard for motor operating mechanism)
7 Shunt release at spring-operated/stored-energy mechanism

Pressure absorber system (option)

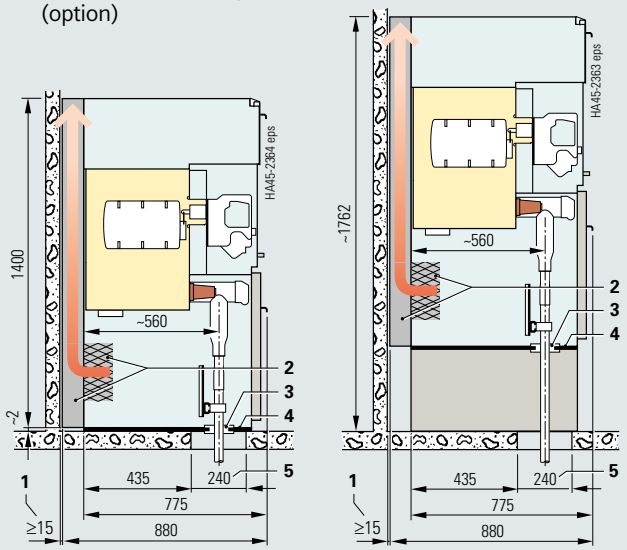

Standard: Overall height 1400 mm

Option: Overall height 1760 mm

Sectional views of the pressure absorber system

1 Wall distance
2 Pressure absorber system with rear pressure relief duct directed upwards
3 Cable bushing
4 Divided floor plate for cable entry for on-site installation
5 Floor opening for the cable feeder

- Bushings according to EN 50 181/DIN EN 50 181 [1] with outside cone
- Cable connection at one level
- Access to the cable compartment only if the feeder has been isolated and earthed

Ring-main cable connection

- With bolted contact (M16) as interface type "C" according to EN 50 181/DIN EN 50 181
- For thermoplastic-insulated cables
- For paper-insulated mass-impregnated cables with adapter systems
- For conventional cable sealing ends via elbow adapters AKE 20/630 (make Siemens)
- For cable T-plugs or cable elbow plugs with bolted contact (M16)
- For connection cross-sections up to 300 mm² (standard)
- Cable routing downwards, cable connection at front
- For rated normal currents of 400/630 A

Options

- Suitable for the connection of surge arresters
- Short-circuit/earth-fault indicator
- Mounted cable clamps
- Double cable connection with corresponding cable plugs

Transformer cable connection

- With plug-in contact as interface type "A" according to EN 50 181/DIN EN 50 181
- For cable elbow plugs (standard) or straight cable plugs with plug-in contact
- For thermoplastic-insulated cables
- For connection cross-sections up to 120 mm²
- For rated normal currents of 200 A

Options

- With bolted contact (M16) as interface type "C" according to EN 50 181/DIN EN 50 181
- Mounted cable clamps
- Cable routing to the rear (for cable elbow plugs)

Cable connection (examples)

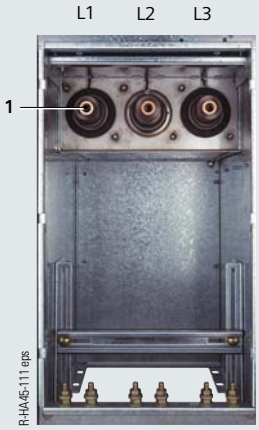

Cable compartment, as delivered

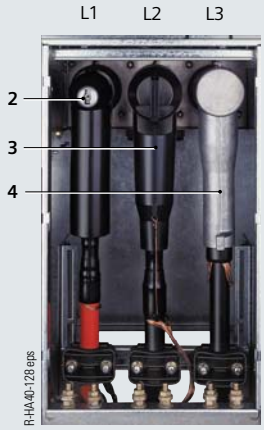

Cable plugs with bolted contact (M16)

Cable connections in ring-main feeder

1 Prepared for cable plugs with bolted contact (M16)

2 Phase L1:
Make: Euromold
type K400 LB
as cable elbow plug

3 Phase L2:
Make: Euromold
type K400 TB
as cable T-plug

4 Phase L3:
Make: Euromold
type AGT 20/630
as cable T-plug

Option:
Mounted cable clamps

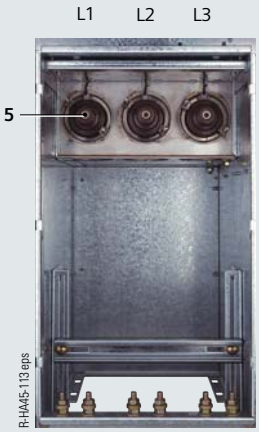

Cable compartment, as delivered

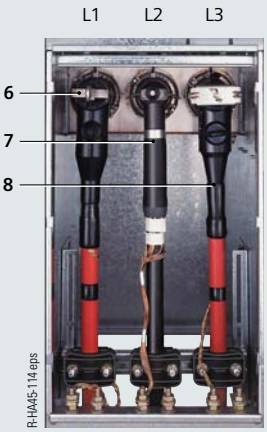

Cable elbow plugs with plug-in contact

Cable connections in transformer feeder

5 Prepared for cable elbow plugs with plug-in contact

6 Phase L1:
Make: Euromold
type K158 LR

7 Phase L2:
Make: nkt cables
type EASW 20/250

8 Phase L3:
Make: Cooper
type DE 250-R-C

Option:
Mounted cable clamps

Transformer cable connection for cable plugs
Standard: With plug-in contact as interface type "A"
Option: With bolted contact (M16) as interface type "C"

Arrangement of connections	Cable routing	Cable plug version
For all schemes (except scheme 01)		
At the front (standard)	Downwards	Cable elbow plug with plug-in contact Option: Cable plug with bolted contact (M16)
At the bottom (option)	To the rear [2]	Cable elbow plug with plug-in contact
	Downwards	Straight cable plug with plug-in contact Option: Straight cable plug with bolted contact (M16)
Only for scheme 01 (radial transformer panel 1T)		
At the bottom (standard)	To the rear [2] (standard)	Cable elbow plug with plug-in contact
	Downwards (option)	Straight cable plug with plug-in contact Option: Straight cable plug with bolted contact (M16)

1) Standard EN 50 181/DIN EN 50 181: "Plug-in bushings above 1 kV up to 36 kV and from 250 A to 1.25 kA for equipment other than liquid-filled transformers."

2) For cable routing of the transformer feeder to the rear: Cable fixing by customer

Cable plugs, cable sealing ends and cable clamps are not included in the scope of supply.

Dimensions

Switchgear (for floor openings and fixing points refer to page 14)

Radial transformer panels · optionally in 3 overall heights

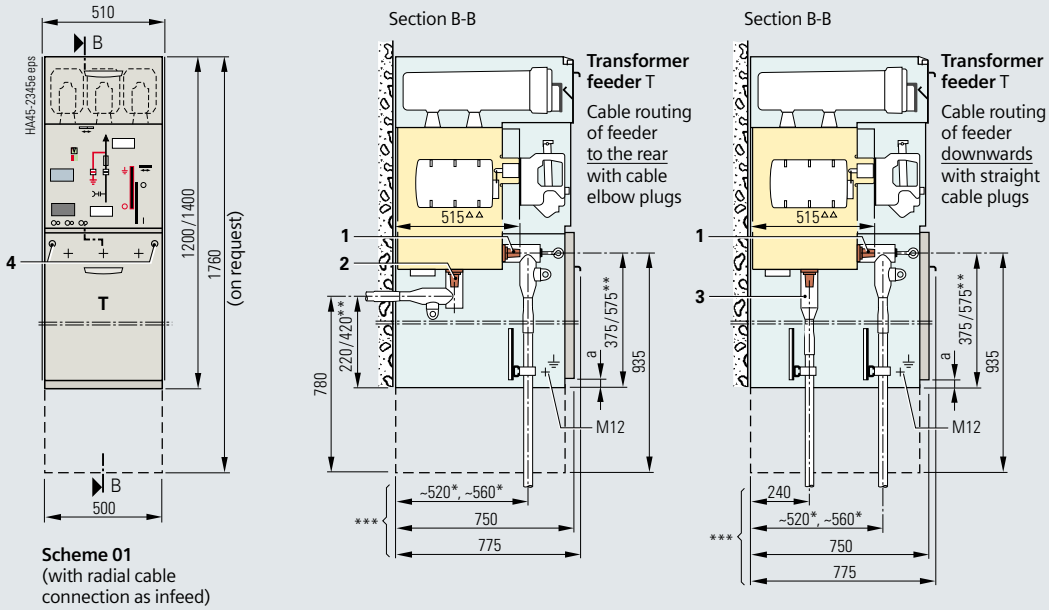

Dimension a
– 40 mm for overall height 1400 mm
– 130 mm for overall height 1200 mm

Scheme 01
(with radial cable connection as infeed)

1 Bushing at the front for cable routing downwards (infeed)
Standard: For cable elbow plugs with plug-in contact
Option: For cable T-plugs with bolted contact (M16)

2 Bushing at the bottom as interface type "A" with plug-in contact for cable routing to the rear (feeder T)

3 Bushing at the bottom as interface type "A" with plug-in contact for cable routing downwards (feeder T)

4 Bolted joint of cable compartment cover (only for scheme 01)

* Dimension depending on the bushing size and make/type of cable plug
** Dimensions depending on the overall heights of switchgear 1200 and 1400 mm
*** For cable routing to the rear, the depth dimensions are 10 mm deeper
ΔΔ Dimension for bushing as interface type "A" with plug-in contact

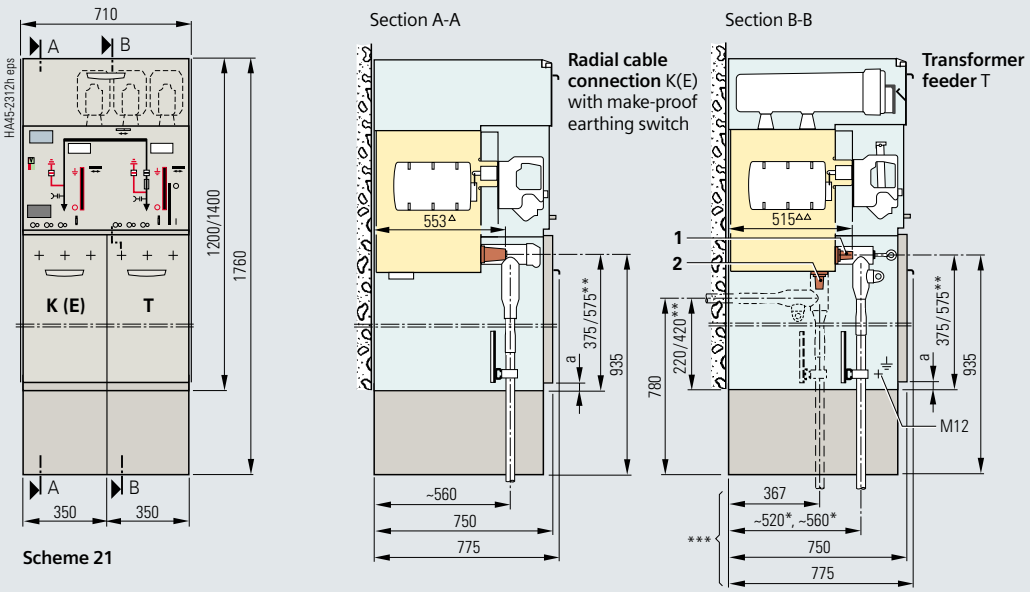

Dimension a
– 40 mm for overall height 1400 mm
– 130 mm for overall height 1200 mm

Scheme 21

1 Bushing at the front (standard) for cable routing downwards

2 Bushing at the bottom (option) for cable routing to the rear or downwards

* Dimension depending on the bushing size and make/type of cable plug
** Dimensions depending on the overall heights of switchgear 1200 and 1400 mm
*** For cable routing to the rear, the depth dimensions are 10 mm deeper
Δ Dimension for bushing as interface type "C" with bolted contact (M16)
ΔΔ Dimension for bushing as interface type "A" with plug-in contact

Switchgear (for floor openings and fixing points refer to page 14)

Block versions, consisting of ring-main feeders · optionally in 3 overall heights

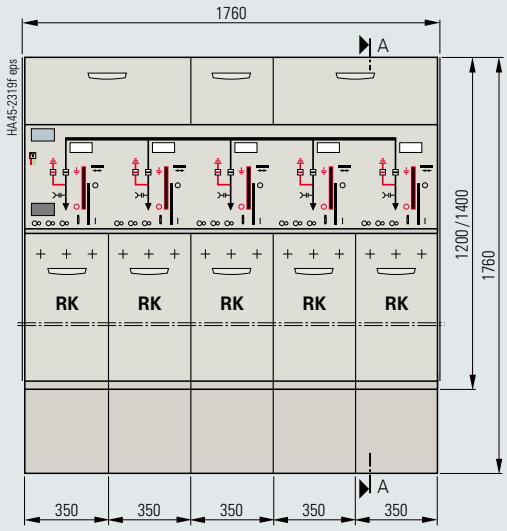

Scheme 84

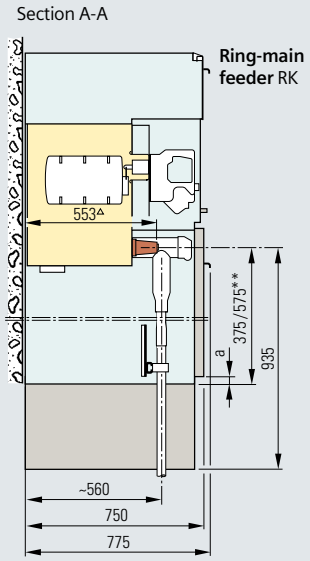

Dimension a

- 40 mm for overall height 1400 mm
- 130 mm for overall height 1200 mm

** Dimensions depending on the overall heights of switchgear 1200 and 1400 mm

△ Dimension for bushing as interface type "C" with bolted contact (M16)

Further scheme types (side views, section A-A, see scheme 84)

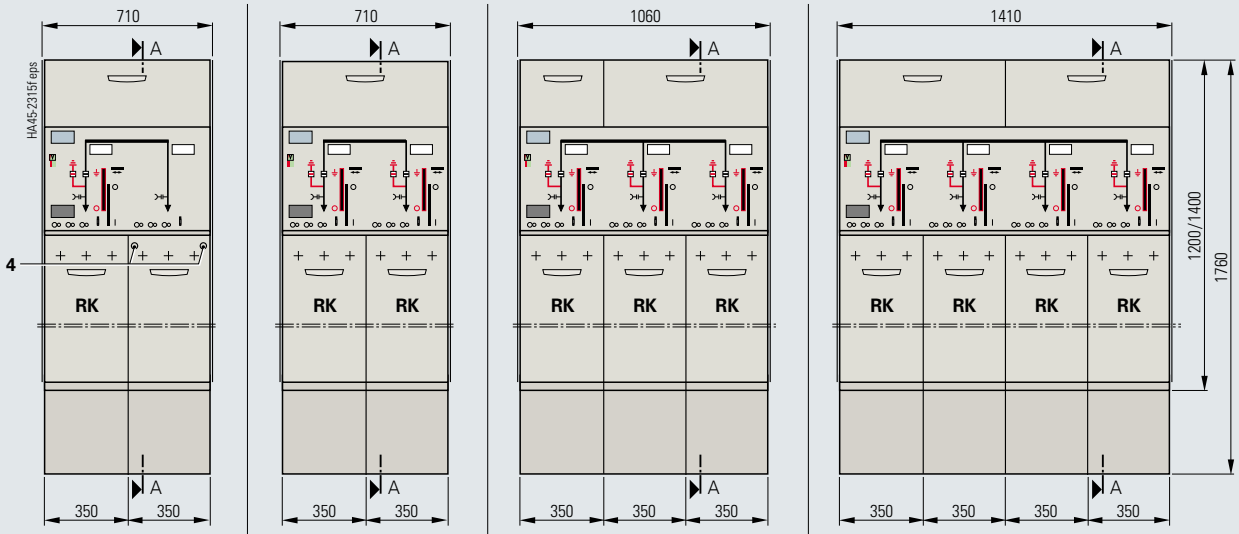

Scheme 02 (1RK with radial cable connection)

Scheme 11

Scheme 32

Scheme 70

4 Bolted joint of cable compartment cover

Dimensions

Switchgear (for floor openings and fixing points refer to page 15)

Block versions, consisting of ring-main feeders and 1 transformer feeder · optionally in 3 overall heights

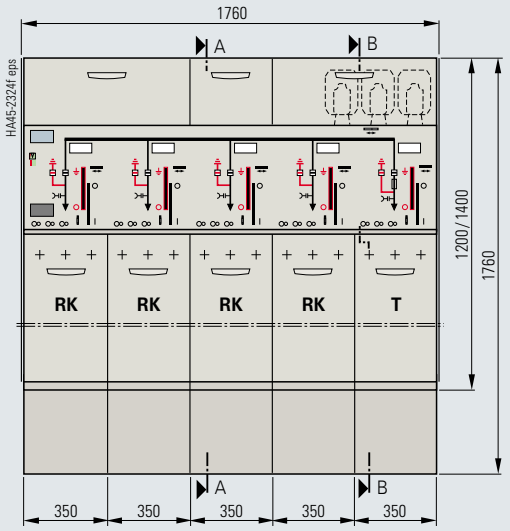

Scheme 72

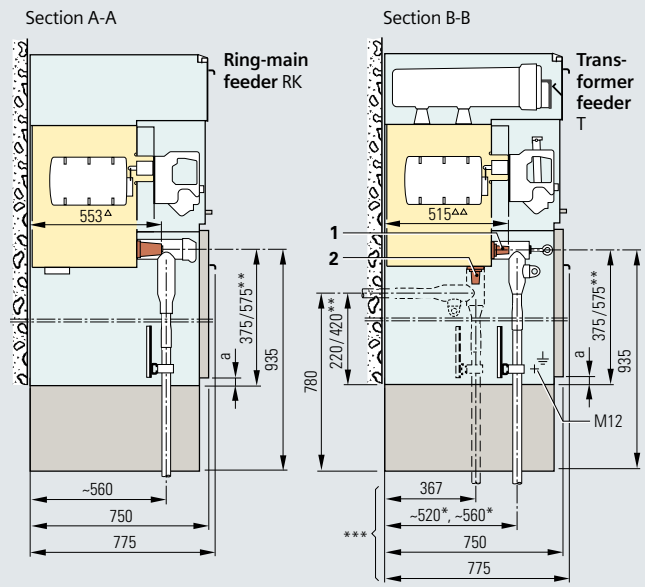

1 Bushing at the front (standard) for cable routing downwards

2 Bushing at the bottom (option) for cable routing to the rear or downwards

Dimension a

– 40 mm for overall height 1400 mm
– 130 mm for overall height 1200 mm

* Dimension depending on the bushing size and make/type of cable plug

** Dimensions depending on the overall heights of switchgear 1200 and 1400 mm

*** For cable routing to the rear, the depth dimensions are 10 mm deeper

△ Dimension for bushing as interface type "C" with bolted contact (M16)

△△ Dimension for bushing as interface type "A" with plug-in contact

Further scheme types (for side views, sections A-A and B-B, see scheme 72)

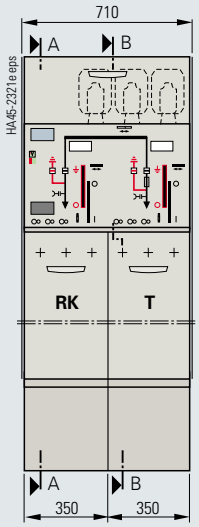

Scheme 20

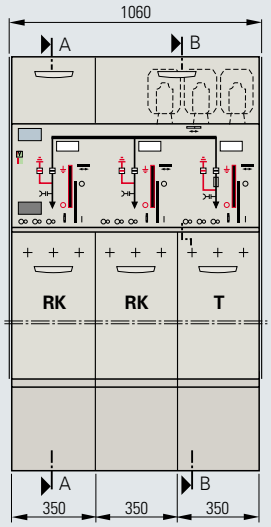

Scheme 10

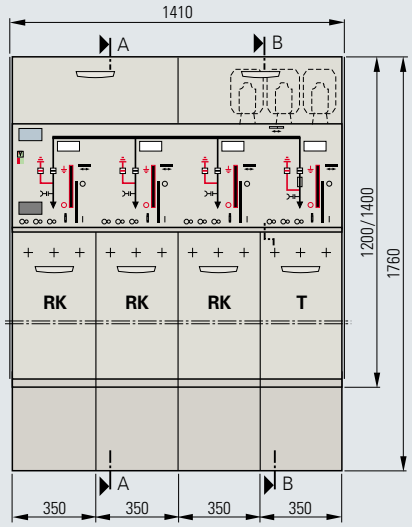

Scheme 71

Switchgear (for floor openings and fixing points refer to page 15)

Block versions, consisting of ring-main feeders and 2 transformer feeders · optionally in 3 overall heights

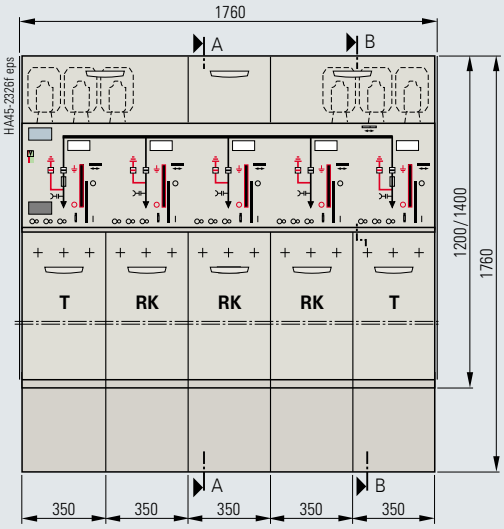

Scheme 82

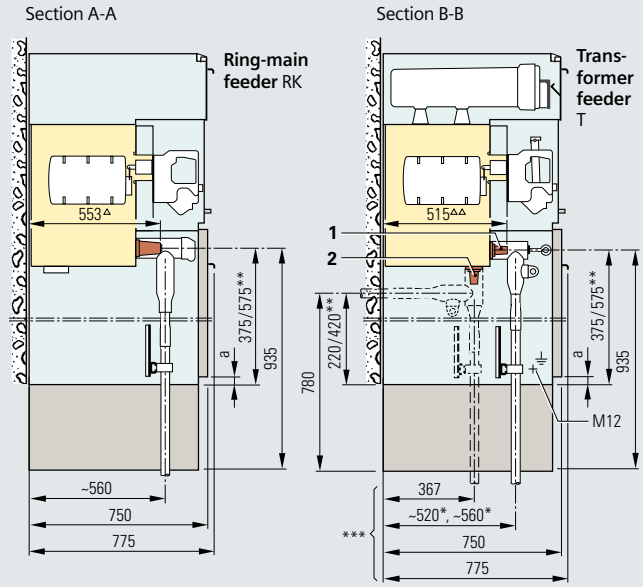

1 Bushing at the front (standard) for cable routing downwards

2 Bushing at the bottom (option) for cable routing to the rear or downwards

Dimension a

– 40 mm for overall height 1400 mm
– 130 mm for overall height 1200 mm

* Dimension depending on the bushing size and make/type of cable plug

** Dimensions depending on the overall heights of switchgear 1200 and 1400 mm

*** For cable routing to the rear, the depth dimensions are 10 mm deeper

△ Dimension for bushing as interface type "C" with bolted contact (M16)

△△ Dimension for bushing as interface type "A" with plug-in contact

Further scheme type (for side views, sections A-A and B-B, see scheme 82)

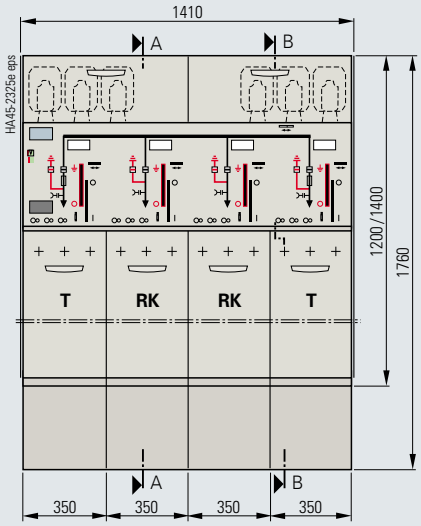

Scheme 81

Dimensions

Floor openings (dimensions [1] in red) and fixing points

For transformer panels

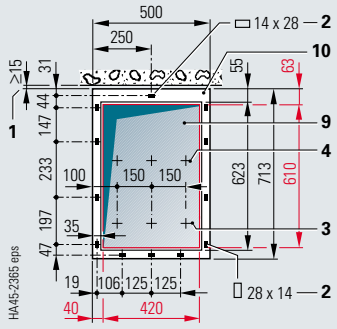

Scheme 01

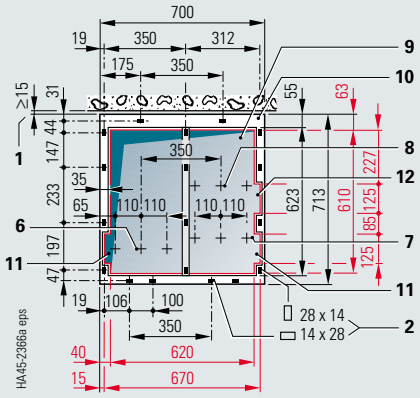

Scheme 21

1 Wall distance
2 Fixing points
3 Position of the incoming cables for the incoming feeder
4 Position of the incoming cables for the outgoing feeder
5 Position of the incoming cables in the ring-main feeder
6 Position of the incoming cables in the cable feeder
7 Position of the incoming cables in the transformer feeder
8 Position of the incoming cables in the transformer feeder (option)
9 Floor opening for HV cables (and, if applicable, control cables)
10 Fixing frame (base) of the switchgear
11 Cutouts for an overall height of switchgear of 1200 mm
12 Cutouts for an overall height of switchgear of 1200 mm only when connecting the transformer cables to the bushing via straight cable plugs

For block versions, consisting of ring-main feeders

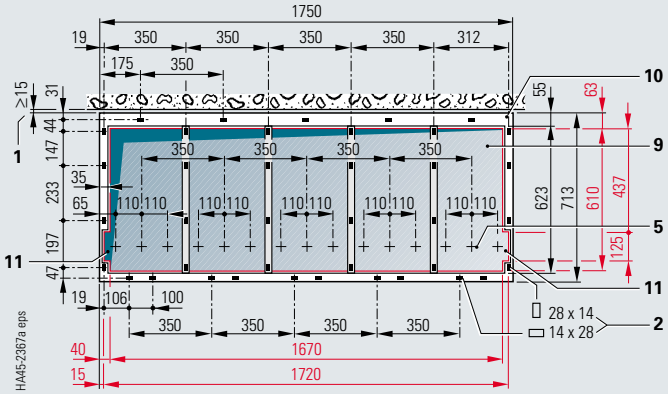

Scheme 84

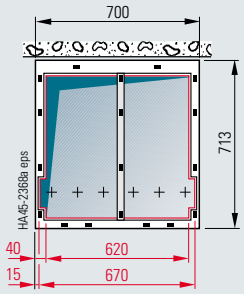

Scheme 02 * and 11 *

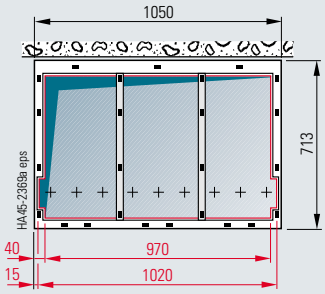

Scheme 32 *

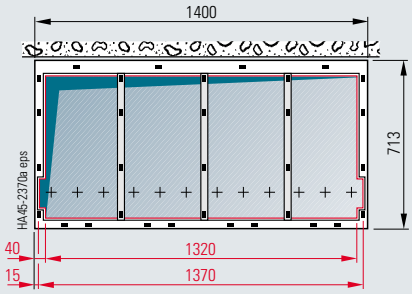

Scheme 70 *

1) Depending on additional options (e.g. surge arrester, 2nd cable, cable-type current transformer) the corresponding floor openings have to be provided as standard (see also page 16)

* Complete dimensions see top figure on the right

Position of the floor openings for switchgear with pressure absorber system (for overall heights 1400 and 1760 mm)

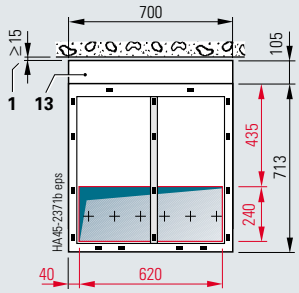

Pressure absorber system for schemes 02, 11, 20 and 21

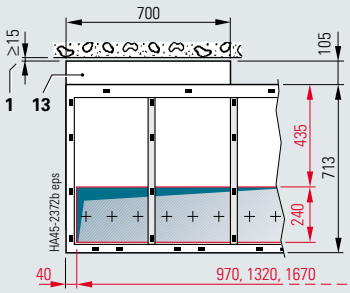

Pressure absorber system for all other schemes

1 Wall distance
13 Pressure relief duct

Further connection combinations:

- For double cable connection on request
- For surge arrester possible for the following cable compartment covers:
  - Standard
  - 25 mm deeper
  - 150 mm deeper

Floor openings (dimensions [1] in red) and fixing points

For block versions, consisting of ring-main feeders and 1 transformer feeder

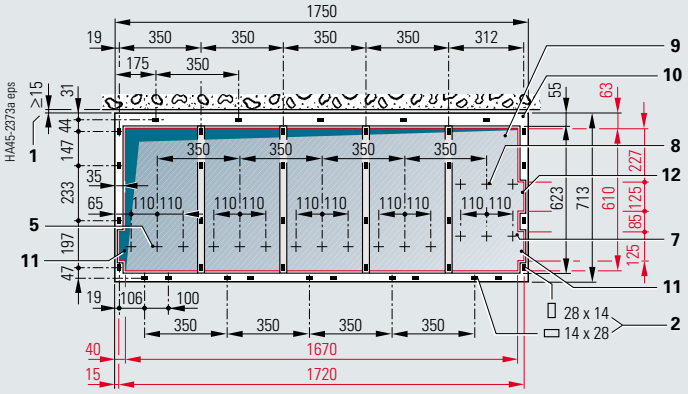

Scheme 72

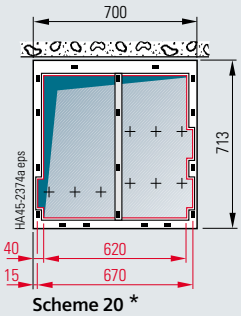

Scheme 20 *

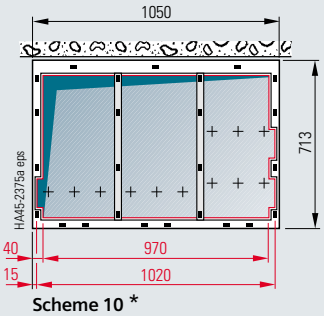

Scheme 10 *

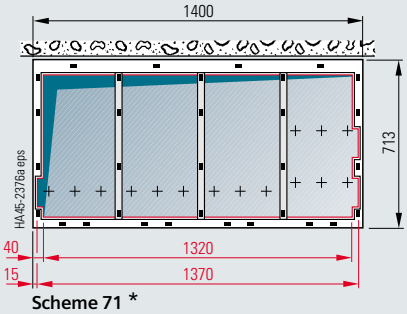

Scheme 71 *

1) Depending on additional options (e.g. surge arrester, 2nd cable, cable-type current transformer) other floor openings have to be provided as standard accordingly (see also page 16)

For block versions, consisting of ring-main feeders and 2 transformer feeders

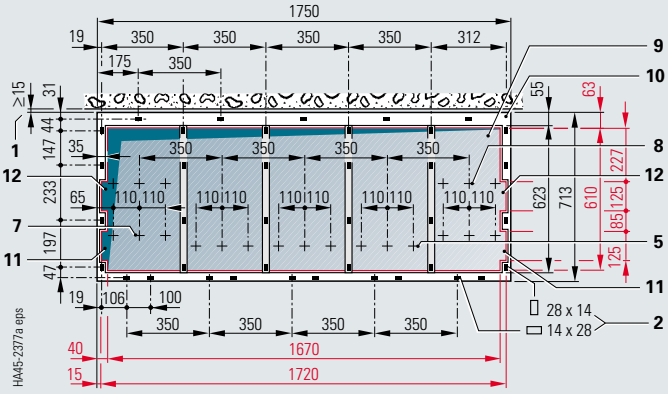

Scheme 82

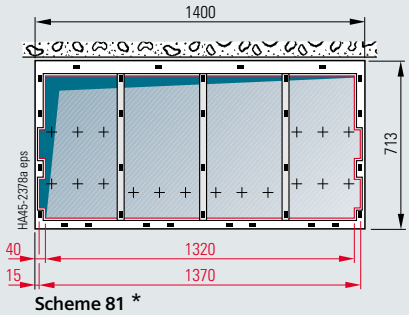

Scheme 81 *

1 Wall distance
2 Fixing points
5 Position of the incoming cables in the ring-main feeder
7 Position of the incoming cables in the transformer feeder
8 Position of the incoming cables in the transformer feeder (option)
9 Floor opening for HV cables (and, if applicable, control cables)
10 Fixing frame (base) of the switchgear
11 Cutouts for an overall height of switchgear of 1200 mm
12 Cutouts for an overall height of switchgear of 1200 mm only when connecting the transformer cables to the bushing via straight cable plugs

* Complete dimensions see top figures on the right and left

Position of the floor openings and fixing points for double cable connection in ring-main feeders

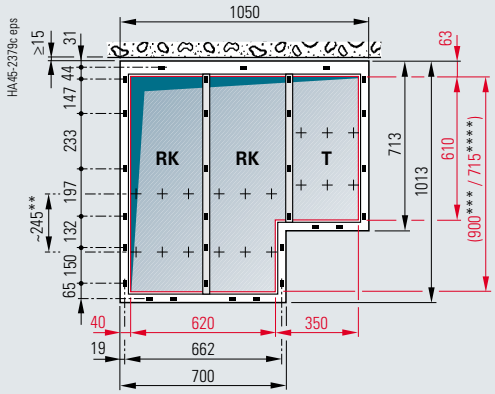

Scheme 10 *
(example)

Note:

Double cable connection in ring-main feeders only possible for switchgear with an overall height of 1400 mm

Abbreviations

RK = Ring-main feeder
T = Transformer feeder

* Complete dimensions see top figure on the left
** Depending on the cable plug used (see also page 16)
*** 300 mm deeper cable compartment cover version
**** 105 mm deeper cable compartment cover version

Dimensions

Examples *** for cable connection in ring-main feeders

Cable connection (examples for overall height 1400 mm)

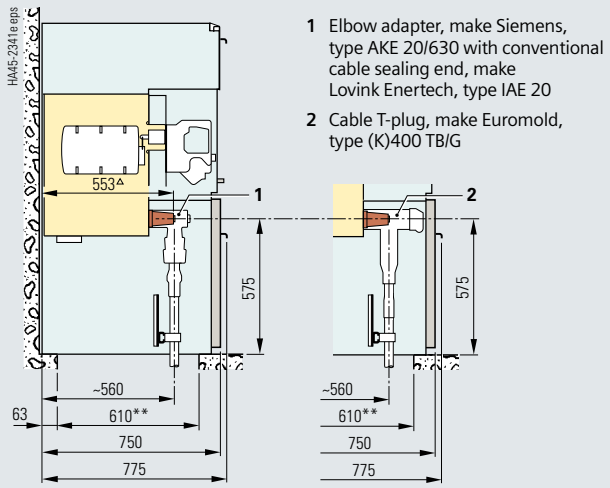

1 Elbow adapter, make Siemens, type AKE 20/630 with conventional cable sealing end, make Lovink Enertech, type IAE 20

2 Cable T-plug, make Euromold, type (K)400 TB/G

Standard cable compartment cover

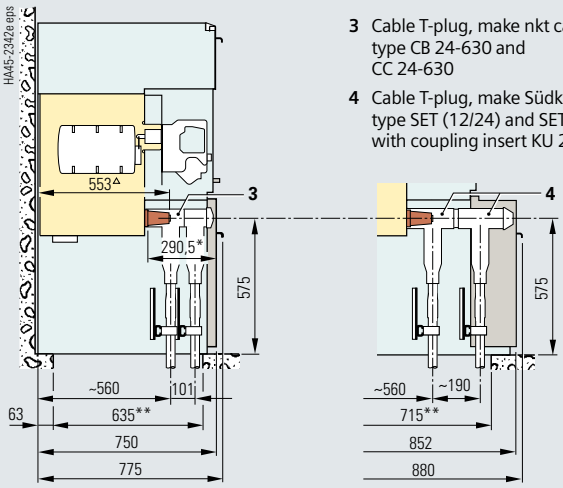

3 Cable T-plug, make nkt cables, type CB 24-630 and CC 24-630

4 Cable T-plug, make Südkabel, type SET (12/24) and SET (12/24) with coupling insert KU 23.2

Cable compartment cover for double cable connection

Cable connection with surge arresters (examples for overall height 1400 mm)

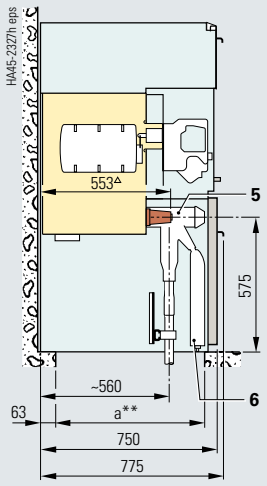

Overall height of switchgear: 1400 mm

5 Cable plug, make Tyco Electronics, type RICS 5139

6 Surge arrester, make Tyco Electronics, up to type RDA21 and type RDA24

Dimension a

– 610 mm up to type RDA21
– 635 mm for type RDA24

Overall height of switchgear: 1200 mm

Numbers **5** and **6** not possible

Standard cable compartment cover

Combination on request

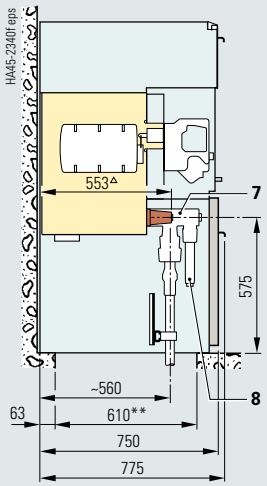

7 Elbow adapter, make Siemens, type AKE 20/630 with conventional cable sealing end, make Lovink Enertech, type IAE 20

On request:

8 Surge arrester, make Siemens

Standard cable compartment cover

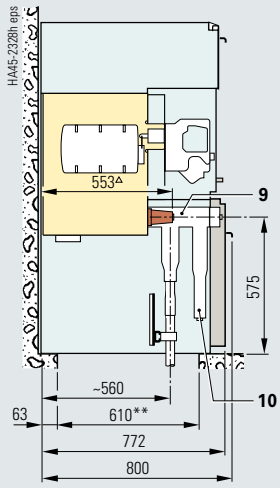

9 Cable plug, make Südkabel, type SET (12/24)

10 Surge arrester, make Südkabel, type MUT (13/23)

25 mm deeper cable compartment cover

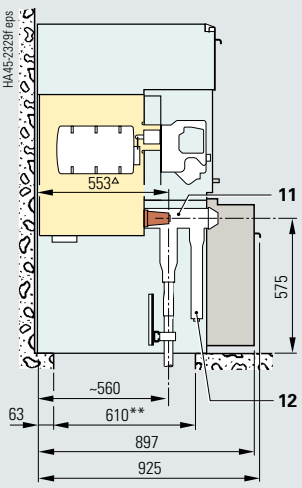

11 Cable plug, make Südkabel, type SEHDT (13/23)

12 Surge arrester, make Südkabel, type MUW (12/22)

or

11 Cable plug, make Euromold, type (K)400 TB/G

12 Surge arrester, e.g. make Euromold, type 400 Pb or similar types of construction

150 mm deeper cable compartment cover

△ Dimension for bushing with bolted contact (M16)

* Max. mounting space for cable and/or surge arrester

** Depth of floor opening

*** Non-binding examples; further examples see Catalog HA 40.1

Types of transport

8DJ20 switchgear is delivered as complete transport unit.

The following must be noted:

- Transport facilities on site
- Transport dimensions and weights
- Size of door openings in building
- Switchgear with LV compartment: Please take other transport dimensions and weights into account

Packing

Place of destination inside Germany or other European countries

- Means of transport: Rail and truck
- Type of packing:
  - Panels on open pallets
  - Covered with PE protective foil

Place of destination overseas

- Means of transport: Ship
- Type of packing:
  - Panels on open pallets
  - In closed crates with sealed PE protective foil
  - With desiccant bags
  - With sealed wooden base
  - Max. storage time: 6 months

Transport data

Scheme no.	Version (abbreviations)	Switchgear height (without 1) LV compartment) mm	Transport dimensions 1) Width m	Height m	Depth m	Volume m^3	Gross 2) weight approx. kg
Transport in Europe by rail, truck, container Packing with PE protective foil and wooden base							
01	1T	1200	1.10	1.4	1.10	1.69	170
		1400	1.10	1.6	1.10	1.94	180
		1760	1.10	1.96	1.10	2.37	210
02	1RK	1200	1.10	1.4	1.10	1.69	210
		1400	1.10	1.6	1.10	1.94	230
		1760	1.10	1.96	1.10	2.37	260
10	2RK+1T	1200	1.45	1.4	1.10	2.23	370
		1400	1.45	1.6	1.10	2.55	400
		1760	1.45	1.96	1.10	3.13	440
11	2RK	1200	1.10	1.4	1.10	1.69	210
		1400	1.10	1.6	1.10	1.94	230
		1760	1.45	1.96	1.10	3.13	260
20	1RK+1T	1200	1.10	1.4	1.10	1.69	260
		1400	1.10	1.6	1.10	1.94	280
		1760	1.10	1.96	1.10	2.37	310
21	1K(E)+1T	1200	1.10	1.4	1.10	1.69	260
		1400	1.10	1.6	1.10	1.94	280
		1760	1.10	1.96	1.10	2.37	310
32	3RK	1200	1.45	1.4	1.10	2.23	300
		1400	1.45	1.6	1.10	2.55	330
		1760	1.45	1.96	1.10	3.13	370
70	4RK	1200	1.80	1.4	1.10	2.77	380
		1400	1.80	1.6	1.10	3.17	420
		1760	1.80	1.96	1.10	3.88	470
71	3RK+1T	1200	1.80	1.4	1.10	2.77	440
		1400	1.80	1.6	1.10	3.17	480
		1760	1.80	1.96	1.10	3.88	530
72	4RK+1T	1200	2.05	1.4	1.10	3.16	510
		1400	2.05	1.6	1.10	3.61	560
		1760	2.05	1.96	1.10	4.42	620
81	2RK+2T	1200	1.80	1.4	1.10	2.77	500
		1400	1.80	1.6	1.10	3.17	540
		1760	1.80	1.96	1.10	3.88	590
82	3RK+2T	1200	2.05	1.4	1.10	3.16	570
		1400	2.05	1.6	1.10	3.61	620
		1760	2.05	1.96	1.10	4.42	680
84	5RK	1200	2.05	1.4	1.10	3.16	450
		1400	2.05	1.6	1.10	3.61	500
		1760	2.05	1.96	1.10	4.42	560

Scheme no.	Version (abbreviations)	Switchgear height (without 1) LV compartment) mm	Transport dimensions 1) Width m	Height m	Depth m	Volume m^3	Gross 2) weight approx. kg
Transport overseas by seafreight Packing with PE protective foil and seaworthy crate							
01	1T	1200	1.10	2.0	1.15	2.53	230
		1400	1.10	2.0	1.15	2.53	250
		1760	1.10	2.0	1.15	2.53	270
02	1RK	1200	1.10	2.0	1.15	2.53	270
		1400	1.10	2.0	1.15	2.53	290
		1760	1.10	2.0	1.15	2.53	320
10	2RK+1T	1200	1.45	2.0	1.15	3.34	450
		1400	1.45	2.0	1.15	3.34	470
		1760	1.45	2.0	1.15	3.34	510
11	2RK	1200	1.10	2.0	1.15	2.53	280
		1400	1.10	2.0	1.15	2.53	290
		1760	1.10	2.0	1.15	2.53	320
20	1RK+1T	1200	1.10	2.0	1.15	2.53	320
		1400	1.10	2.0	1.15	2.53	340
		1760	1.10	2.0	1.15	2.53	370
21	1K(E)+1T	1200	1.10	2.0	1.15	2.53	310
		1400	1.10	2.0	1.15	2.53	340
		1760	1.10	2.0	1.15	2.53	370
32	3RK	1200	1.45	2.0	1.15	3.34	380
		1400	1.45	2.0	1.15	3.34	400
		1760	1.45	2.0	1.15	3.34	440
70	4RK	1200	1.80	2.0	1.15	4.14	470
		1400	1.80	2.0	1.15	4.14	500
		1760	1.80	2.0	1.15	4.14	550
71	3RK+1T	1200	1.80	2.0	1.15	4.14	530
		1400	1.80	2.0	1.15	4.14	560
		1760	1.80	2.0	1.15	4.14	610
72	4RK+1T	1200	2.05	2.0	1.15	4.72	640
		1400	2.05	2.0	1.15	4.72	670
		1760	2.05	2.0	1.15	4.72	730
81	2RK+2T	1200	1.80	2.0	1.15	4.14	590
		1400	1.80	2.0	1.15	4.14	620
		1760	1.80	2.0	1.15	4.14	670
82	3RK+2T	1200	2.05	2.0	1.15	4.72	700
		1400	2.05	2.0	1.15	4.72	730
		1760	2.05	2.0	1.15	4.72	790
84	5RK	1200	2.05	2.0	1.15	4.72	580
		1400	2.05	2.0	1.15	4.72	610
		1760	2.05	2.0	1.15	4.72	670

1) With LV compartment: Other transport dimensions and weights

2) Depending on the relevant equipment, e.g. motor operating mechanism

Abbreviations:
RK = Ring-main feeder
T = Transformer feeder
K(E) = Cable feeder for radial cable connection with make-proof earthing switch

Designs

Switchgear with low-voltage compartment, switchgear installation

Option low-voltage compartment

- Overall height
  - Standard: 400 mm
  - Option: 600 or 900 mm
  - Option: Cover
- Installation on the switchgear
  - Possible per feeder
  - Customer-specific configuration
  - Separate cable duct on the switchgear next to the low-voltage compartment

Shipping and transport data

If the switchgear is delivered with low-voltage compartment, other transport dimensions and weights have to be taken into account.

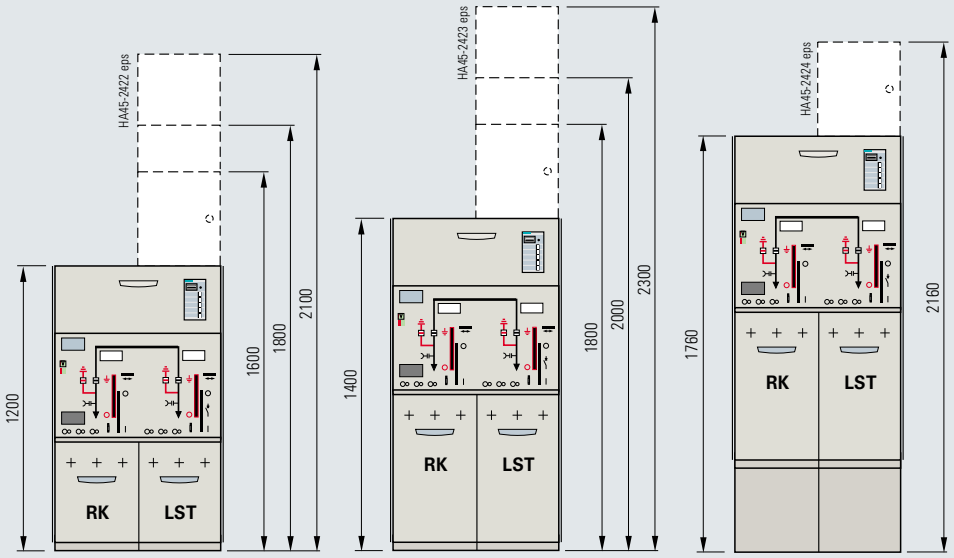

Switchgear height

1200 mm 1400 mm 1760 mm

Combinations with low-voltage compartment

Dimensions e.g. for scheme 20

Switchgear installation

Wall-standing arrangement

Direction of pressure relief
Overall height 1200 mm
Downwards
Overall height 1400 mm
Downwards Option: to the rear
Overall height 1760 mm
Downwards Option: to the rear

Free-standing arrangement (on request)

(Switchgear installation only for pressure relief downwards)

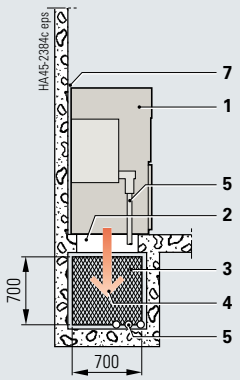

Pressure relief downwards (all overall heights)

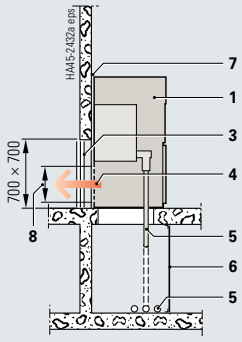

Option: Pressure relief to the rear, overall height of switchgear 1400 or 1760 mm (only for transformer cable connection downwards)

1 Switchgear
2 Floor opening into cable duct
3 Expanded metal (not included in the scope of supply)
4 Direction of pressure relief
5 Cable
6 Partition (e.g. of sheet-metal, not included in the scope of supply)
7 Wall distance
8 Rear cutout in the switchgear (size approx. 350 mm x 615 mm, not for scheme 01/ = 1T)

Outdoor enclosures with 8DJ20 switchgear

Application

8DJ20 switchgear in outdoor enclosures is used where the network structure requires this, but without transformers and low-voltage distribution boards.

Features

- Two sizes
  – For switchgear with 3 feeders
  – For switchgear with 4 feeders
- Degree of protection IP 44
- 8DJ20 switchgear installed in outdoor enclosure
- Cable compartment partitioned off adjacent feeders
- With lockable door
- Complete interlocking functions

Cable connection

See pages 9 and 16.

- Cable entry from below
- Floor cover
  – Divided and bolted
  – Removable for inserting the cables
- Cable bracket movable upwards or to the rear to suit cable sealing ends
- Cables fixed by cable clamps (option) on C-rails of cable bracket
- Option:
  Cable clamps

Schemes

- For 3-panel outdoor enclosure:
  – Scheme 10
  – Scheme 32
- For 4-panel outdoor enclosure:
  – Scheme 70
  – Scheme 71
  – Scheme 81

For 3-panel switchgear

Outdoor enclosure with 2-wing door
Overall width 1150 mm

As above, however with doors removed, some cable compartment covers removed

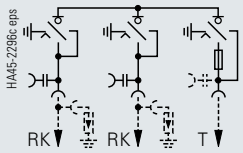

Scheme 10 **

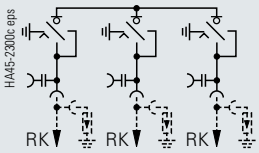

Scheme 32 **

For 4-panel switchgear

Outdoor enclosure with 2-wing door
Overall width 1500 mm

As above, however with doors removed

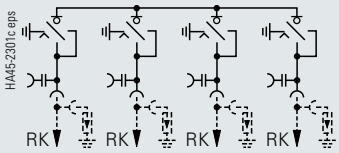

Scheme 70 **

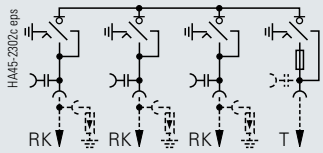

Scheme 71 **

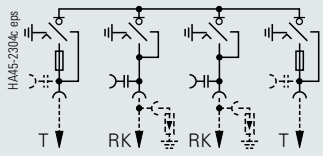

Scheme 81 **

** Option: Surge arrester
Only such surge arresters can be used which are suitable for a cable compartment cover flush with the operating front, e.g. make Tyco Electronics, type RDA (see also Catalog HA 40.1 "Cable connections").

Special Designs

Outdoor enclosures with 8DJ20 switchgear

Dimensions

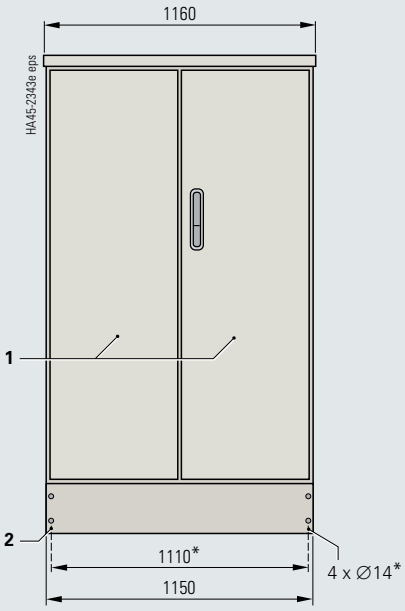

Outdoor enclosure with 2-wing door
for 3-panel switchgear

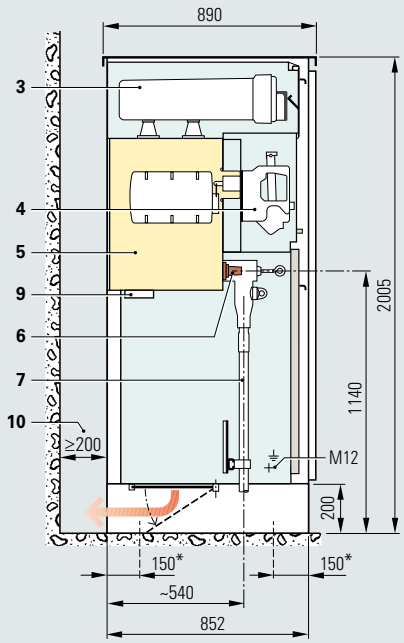

Sectional view of transformer feeder

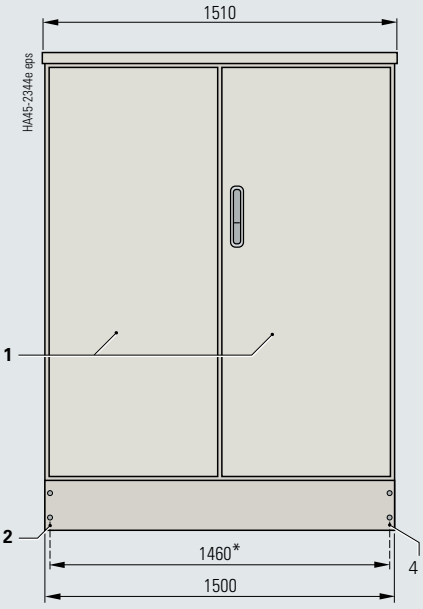

Outdoor enclosure with 2-wing door
for 4-panel switchgear

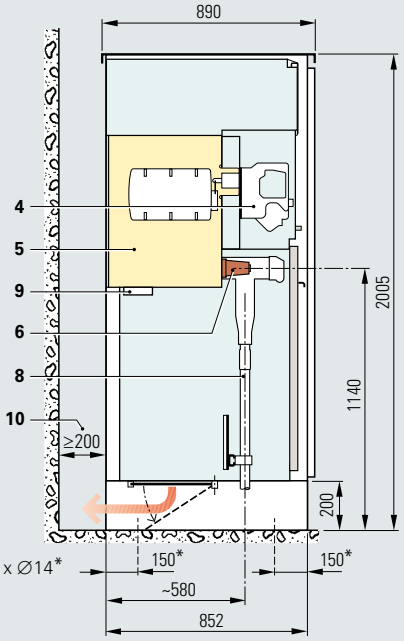

Sectional view of ring-main feeder

1 Door of outdoor enclosure
2 Floor fixing 4 x ∅14 mm
3 HV HRC fuse assembly
4 Operating mechanism
5 Switchgear vessel
6 Bushing for cable connection
7 Cable elbow plug with plug-in contact
8 Cable T-plug with bolted contact (M16)
9 Pressure relief device
10 Wall distance ≥ 200 mm

* Floor fixing dimension

For position of incoming cables see pages 14 and 15

For cable connections with surge arresters see page 16

Overview of standards (March 2008)

		IEC standard	VDE standard	EN standard
Switchgear	8DJ20	IEC 62 271-1	VDE 0671-1	EN 62 271-1
		IEC 62 271-200	VDE 0671-200	EN 62 271-200
Switching devices	Circuit-breaker	IEC 62 271-100	VDE 0671-100	EN 62 271-100
	Disconnector and earthing switch	IEC 62 271-102	VDE 0671-102	EN 62 271-102
	Switch-disconnector	IEC 60 265-1	VDE 0670-301	EN 60 265-1
	Switch-disconnector / fuse combination	IEC 62 271-105	VDE 0671-105	EN 62 271-105
	HV HRC fuses	IEC 60 282-1	VDE 0670-4	EN 60 282
	Voltage detecting systems	IEC 61 243-5	VDE 0682-415	EN 61 243-5
Degree of protection	–	IEC 60 529	VDE 0470-1	EN 60 529
Insulation	–	IEC 60 071	VDE 0111	EN 60 071
Instrument transformers	Current transformers	IEC 60 044-1	VDE 0414-1	EN 60 044-1
	Voltage transformers	IEC 60 044-2	VDE 0414-2	EN 60 044-2
	Combined transformers [1)]	IEC 60 044-3	VDE 0414-5	EN 60 044-3
Installation	–	IEC 61 936-1	VDE 0101	–

1) Only for switchgear type 8DH10

Standards

The 8DJ20 switchgear complies with the relevant standards and specifications applicable at the time of type tests.

In accordance with the harmonization agreement reached by the countries of the European Community, their national specifications conform to the IEC standard.

Dielectric strength

See also Catalog HA 40.1 **"Standards"**.

Terms

"Make-proof earthing switches" are earthing switches with short-circuit making capacity according to IEC 62 271-102/ VDE 0671-102.

Type of service location

8DJ20 switchgear can be used as indoor installations in accordance with IEC 61 936 (Power installations exceeding 1 kV AC) and VDE 0101:

- Outside lockable electrical service locations at places which are not accessible to the public. Enclosures of switchgear can only be removed with tools.
- Inside lockable electrical service locations. A lockable electrical service location is a place outdoors or indoors that is reserved exclusively for housing electrical equipment and which is kept under lock and key. Access is restricted to authorized personnel and persons who have been properly instructed in electrical engineering. Untrained or unskilled persons may only enter under the supervision of authorized personnel or properly instructed persons.

Internal arc classification (option)

The possibility of arc faults in gas-insulated switchgear type 8DJ20 is improbable and a mere fraction of that typical of earlier switchgear types, due to:

- Use of gas-filled switchgear compartments
- Use of suitable switching devices such as three-position switches with make-proof earthing switch
- Logical mechanical interlocks
- Use of ring-core current transformers (option)

Optionally, switchgear type 8DJ20 can be designed with internal arc classification:

- Internal arc classification **IAC**
- Type of accessibility **A** (for authorized personnel only)
- Accessible sides
  – Side **F** (front)
  – Side **L** (lateral)
  – On request: Side **R** (rear)
- Arc test current up to 21 kA /1 s

Climate and environmental influences

8DJ20 switchgear is completely enclosed and insensitive to climatic influences.

- Climatic tests fulfilled in accordance with IEC 60 932 (report)
- All medium-voltage devices (except for HV HRC fuses) are installed in a gas-tight, welded stainless-steel switchgear vessel which is filled with SF_6 gas
- Live parts outside the switchgear vessel are provided with single-pole enclosure
- At no point can creepage currents flow from high-voltage potentials to earth
- Operating mechanism parts which are functionally important are made of corrosion-proof materials
- Bearings in operating mechanisms are designed as dry-type bearings and do not require lubrication
- Suitable instrument transformer designs

Standards

Classification

Classification of 8DJ20 switchgear according to IEC 62 271-200

Design and construction

Partition class	PM (metallic partition)
Loss of service continuity category [1)] Switchgear – With HV HRC fuses – Without HV HRC fuses (RK, T, LST)	 LSC 2A LSC 2B
Accessibility to compartments (enclosure) – Busbar compartment – Switching-device compartment – Low-voltage compartment (option) – Cable compartment – Switchgear with HV HRC fuses (T…) – Switchgear without HV HRC fuses – Switchgear scheme 01 (1 T)	Access option – Non-accessible – Non-accessible – Tool-based – Interlock-controlled – Interlock-controlled – Tool-based

Internal arc classification (option)

Designation of internal arc classification IAC IAC for – Wall-standing arrangement (standard)	Rated voltage 7.2 kV to 24 kV IAC A FL 21 kA, 1 s
Type of accessibility A – F – L	Switchgear in closed electrical service location, access "for authorized personnel only" (acc. to IEC 62 271-200) Front Lateral
Arc test current [2)]	Up to 21 kA
Test duration	1 s

1) The loss of service continuity category is always referred to the complete switchgear, i.e. the panel with the lowest category defines the loss of service continuity category of the complete switchgear.

2) 8DJ20 switchgear with pressure absorber:
Arc test current up to 16 kA, for overall height of switchgear 1400 and 1760 mm.

Notes

If not stated otherwise on the individual pages of this catalog, we reserve the right to include modifications, especially regarding the stated values, dimensions and weights.

Drawings are not binding.

All product designations used are trademarks or product names of Siemens AG or other suppliers.

If not stated otherwise, all dimensions in this catalog are given in mm.

Responsible for

Technical contents:
Christoph Maul
Siemens AG, Dept. PTD M 2 PPM
Erlangen

General editing:
Gabriele Pollok
Siemens AG, Dept. PTD CC M
Erlangen

Siemens AG
Energy Sector
Medium Voltage Division
Postfach 32 40
91050 Erlangen
Germany

www.siemens.com/
medium-voltage-switchgear

For questions concerning
Power Transmission and Distribution:
You can contact our Customer Support
Center 24 hours a day, 365 days a year.
Tel.: +49 180/524 70 00
Fax: +49 180/524 24 71
(Charges depending on provider)
E-Mail: support.energy@siemens.com
www.siemens.com/energy-support

Subject to change without notice
Order No.: E50001-K1445-A311-A7-7600
Printed in Germany
Dispo 31606
KG 04.08 6.0 24 En
103135 6101/6528