查询AME8803BEEYL供应商

AME, Inc.

AME8803 / 8814

300mA CMOS LDO

■ General Description

The AME8803/8814 family of positive, linear regulators feature low quiescent current (30µA typ.) with low drop-out voltage, making them ideal for battery applications. The space-saving SOT-26 package is attractive for "Pocket" and "Hand Held" applications.

These rugged devices have both Thermal Shutdown, and Current Fold-back to prevent device failure under the "Worst" of operating conditions.

An additional feature is a "Power Good" detector, which pulls low when the output is out of regulation. In applications requiring a low noise, regulated supply, place a 1000pF capacitor between Bypass and ground.

The AME8803/8814 is stable with an output capacitance of 2.2µF or greater.

■ Features

- Very Low Dropout Voltage
- Guaranteed 300mA Output
- Accurate to within 1.5%
- 30µA Quiescent Current
- Over-Temperature Shutdown
- Current Limiting
- Short Circuit Current Fold-back
- Noise Reduction Bypass Capacitor
- Power Good Detector
- Power-Saving Shutdown Mode
- Space-Saving SOT-26
- Factory Pre-set Output Voltages
- Low Temperature Coefficient

■ Applications

- Instrumentation
- Portable Electronics
- Wireless Devices
- Cordless Phones
- PC Peripherals
- Battery Powered Widgets
- Electronic Scales

■ Functional Block Diagram

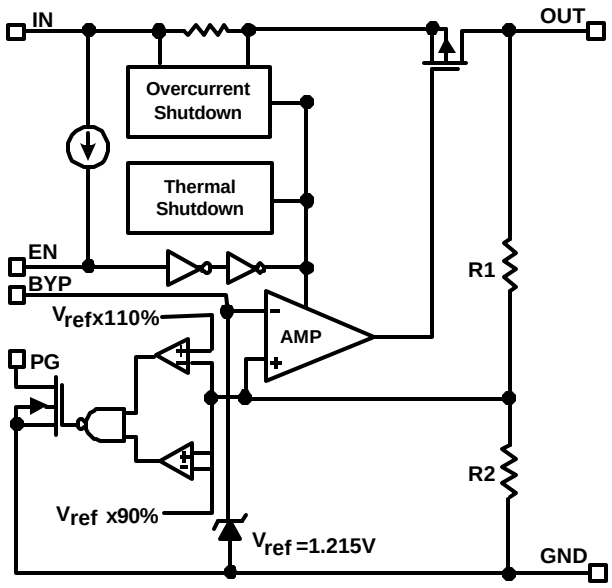

■ Typical Application

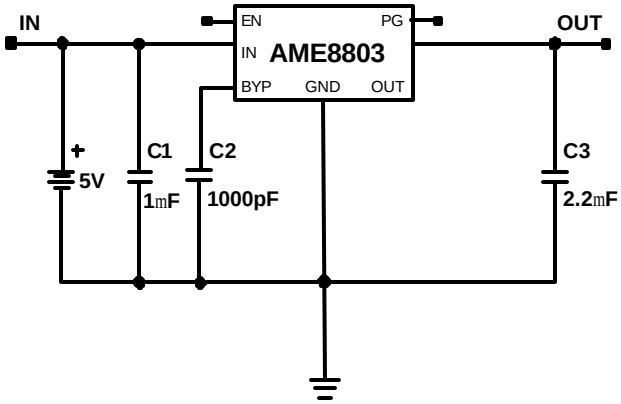

■ Pin Configuration

SOT-26
Top View

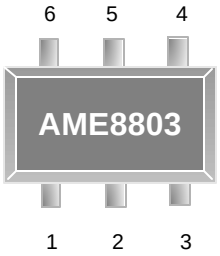

AME 8803

1. V_{IN}
2. GND
3. EN
4. PG
5. BYP
6. V_{OUT}

*** Die Attach:**
Non-Conductive Epoxy

SOT-26
Top View

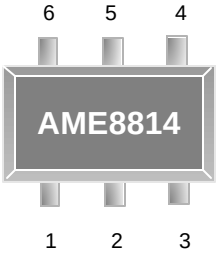

AME 8814

1. EN
2. GND
3. BYP
4. V_{OUT}
5. GND
6. V_{IN}

*** Die Attach:**
Conductive Epoxy

■ Ordering Information

AME8803 x x x x x
AME8814 x x x x x

- Special Feature
- Number of Pins
- Package Type
- Operating Temperature Range
- Product Grade or Option

Product Grade or Option	Operating Temperature Range	Package Type	Number of Pins	Special Feature
A: 3.3V B: 3.0V C: 2.8V D: 2.5V E: 3.8V F: 3.6V G: 3.5V H: 2.7V I: 3.4V J: 2.85V K: 3.7V L: 1.5V M: 1.8V N: 2.9V O: 3.1V P: 4.1V Q: 4.75V R: 2.65V S: 5.0V T: 1.2V U: 3.2V V: 3.15V W: 2.3V Y: 1.9V Z: 1.7V 1: 1.3V 2: 2.0V 3: 4.2V 4: 4.0V	E: -40°C to 85°C	E: SOT-2X	Y: 6	L: Low Profile Y: Lead Free & Low Profile Z: Lead Free

■ Ordering Information (contd.)

Part Number	Marking*	Output Voltage	Package	Operating Temp. Range
AME8803AEEY	AAPww	3.3V	SOT-26	- 40°C to + 85°C
AME8803AEEYL	AAPww	3.3V	TSOT-26	- 40°C to + 85°C
AME8803AEEYY	AAPww	3.3V	TSOT-26	- 40°C to + 85°C
AME8803AEEYZ	AAPww	3.3V	SOT-26	- 40°C to + 85°C
AME8803BEEY	AAQww	3.0V	SOT-26	- 40°C to + 85°C
AME8803BEEYL	AAQww	3.0V	TSOT-26	- 40°C to + 85°C
AME8803BEEYY	AAQww	3.0V	TSOT-26	- 40°C to + 85°C
AME8803BEEYZ	AAQww	3.0V	SOT-26	- 40°C to + 85°C
AME8803CEEY	AARww	2.8V	SOT-26	- 40°C to + 85°C
AME8803CEEYL	AARww	2.8V	TSOT-26	- 40°C to + 85°C
AME8803CEEYY	AARww	2.8V	TSOT-26	- 40°C to + 85°C
AME8803CEEYZ	AARww	2.8V	SOT-26	- 40°C to + 85°C
AME8803DEEY	AASww	2.5V	SOT-26	- 40°C to + 85°C
AME8803DEEYL	AASww	2.5V	TSOT-26	- 40°C to + 85°C
AME8803DEEYY	AASww	2.5V	TSOT-26	- 40°C to + 85°C
AME8803DEEYZ	AASww	2.5V	SOT-26	- 40°C to + 85°C
AME8803EEEY	AATww	3.8V	SOT-26	- 40°C to + 85°C
AME8803EEEYL	AATww	3.8V	TSOT-26	- 40°C to + 85°C
AME8803EEEYY	AATww	3.8V	TSOT-26	- 40°C to + 85°C
AME8803EEEYZ	AATww	3.8V	SOT-26	- 40°C to + 85°C
AME8803FEEY	ABQww	3.6V	SOT-26	- 40°C to + 85°C
AME8803FEEYL	ABQww	3.6V	TSOT-26	- 40°C to + 85°C
AME8803FEEYY	ABQww	3.6V	TSOT-26	- 40°C to + 85°C
AME8803FEEYZ	ABQww	3.6V	SOT-26	- 40°C to + 85°C

Note: ww represents the date code and pls refer to Date Code Rule before Package Dimension.
* A line on top of the first character represents lead free plating such as $\overline{A}$AP
Please consult AME sales office or authorized Rep./Distributor for output voltage and package type availability.

■ Ordering Information (contd.)

Part Number	Marking*	Output Voltage	Package	Operating Temp. Range
AME8803GEEY	ACHww	3.5V	SOT-26	- 40°C to + 85°C
AME8803GEEYL	ACHww	3.5V	TSOT-26	- 40°C to + 85°C
AME8803GEEYY	ACHww	3.5V	TSOT-26	- 40°C to + 85°C
AME8803GEEYZ	ACHww	3.5V	SOT-26	- 40°C to + 85°C
AME8803HEEY	AGKww	2.7V	SOT-26	- 40°C to + 85°C
AME8803HEEYL	AGKww	2.7V	TSOT-26	- 40°C to + 85°C
AME8803HEEYY	AGKww	2.7V	TSOT-26	- 40°C to + 85°C
AME8803HEEYZ	AGKww	2.7V	SOT-26	- 40°C to + 85°C
AME8803IEEY	AEQww	3.4V	SOT-26	- 40°C to + 85°C
AME8803IEEYL	AEQww	3.4V	TSOT-26	- 40°C to + 85°C
AME8803IEEYY	AEQww	3.4V	TSOT-26	- 40°C to + 85°C
AME8803IEEYZ	AEQww	3.4V	SOT-26	- 40°C to + 85°C
AME8803JEEY	AGSww	2.85V	SOT-26	- 40°C to + 85°C
AME8803JEEYL	AGSww	2.85V	TSOT-26	- 40°C to + 85°C
AME8803JEEYY	AGSww	2.85V	TSOT-26	- 40°C to + 85°C
AME8803JEEYZ	AGSww	2.85V	SOT-26	- 40°C to + 85°C
AME8803KEEY	AHUww	3.7V	SOT-26	- 40°C to + 85°C
AME8803KEEYL	AHUww	3.7V	TSOT-26	- 40°C to + 85°C
AME8803KEEYY	AHUww	3.7V	TSOT-26	- 40°C to + 85°C
AME8803KEEYZ	AHUww	3.7V	SOT-26	- 40°C to + 85°C
AME8803LEEY	AJKww	1.5V	SOT-26	- 40°C to + 85°C
AME8803LEEYL	AJKww	1.5V	TSOT-26	- 40°C to + 85°C
AME8803LEEYY	AJKww	1.5V	TSOT-26	- 40°C to + 85°C
AME8803LEEYZ	AJKww	1.5V	SOT-26	- 40°C to + 85°C
AME8803MEEY	AJLww	1.8V	SOT-26	- 40°C to + 85°C
AME8803MEEYL	AJLww	1.8V	TSOT-26	- 40°C to + 85°C
AME8803MEEYY	AJLww	1.8V	TSOT-26	- 40°C to + 85°C
AME8803MEEYZ	AJLww	1.8V	SOT-26	- 40°C to + 85°C

■ Ordering Information (contd.)

Part Number	Marking*	Output Voltage	Package	Operating Temp. Range
AME8803NEEY	ALAww	2.9V	SOT-26	- 40°C to + 85°C
AME8803NEEYL	ALAww	2.9V	TSOT-26	- 40°C to + 85°C
AME8803NEEYY	ALAww	2.9V	TSOT-26	- 40°C to + 85°C
AME8803NEEYZ	ALAww	2.9V	SOT-26	- 40°C to + 85°C
AME8803OEEY	ALBww	3.1V	SOT-26	- 40°C to + 85°C
AME8803OEEYL	ALBww	3.1V	TSOT-26	- 40°C to + 85°C
AME8803OEEYY	ALBww	3.1V	TSOT-26	- 40°C to + 85°C
AME8803OEEYZ	ALBww	3.1V	SOT-26	- 40°C to + 85°C
AME8803SEEY	AQZww	5.0V	SOT-26	- 40°C to + 85°C
AME8803SEEYL	AQZww	5.0V	TSOT-26	- 40°C to + 85°C
AME8803SEEYY	AQZww	5.0V	TSOT-26	- 40°C to + 85°C
AME8803SEEYZ	AQZww	5.0V	SOT-26	- 40°C to + 85°C
AME8814AEEY	AIEww	3.3V	SOT-26	- 40°C to + 85°C
AME8814AEEYL	AIEww	3.3V	TSOT-26	- 40°C to + 85°C
AME8814AEEYY	AIEww	3.3V	TSOT-26	- 40°C to + 85°C
AME8814AEEYZ	AIEww	3.3V	SOT-26	- 40°C to + 85°C
AME8814BEEY	AIFww	3.0V	SOT-26	- 40°C to + 85°C
AME8814BEEYL	AIFww	3.0V	TSOT-26	- 40°C to + 85°C
AME8814BEEYY	AIFww	3.0V	TSOT-26	- 40°C to + 85°C
AME8814BEEYZ	AIFww	3.0V	SOT-26	- 40°C to + 85°C
AME8814CEEY	AIGww	2.8V	SOT-26	- 40°C to + 85°C
AME8814CEEYL	AIGww	2.8V	TSOT-26	- 40°C to + 85°C
AME8814CEEYY	AIGww	2.8V	TSOT-26	- 40°C to + 85°C
AME8814CEEYZ	AIGww	2.8V	SOT-26	- 40°C to + 85°C
AME8814DEEY	AIHww	2.5V	SOT-26	- 40°C to + 85°C
AME8814DEEYL	AIHww	2.5V	TSOT-26	- 40°C to + 85°C
AME8814DEEYY	AIHww	2.5V	TSOT-26	- 40°C to + 85°C
AME8814DEEYZ	AIHww	2.5V	SOT-26	- 40°C to + 85°C

■ Ordering Information (contd.)

Part Number	Marking*	Output Voltage	Package	Operating Temp. Range
AME8814EEEY	AIIww	3.8V	SOT-26	- 40°C to + 85°C
AME8814EEEYL	AIIww	3.8V	TSOT-26	- 40°C to + 85°C
AME8814EEEYY	AIIww	3.8V	TSOT-26	- 40°C to + 85°C
AME8814EEEYZ	AIIww	3.8V	SOT-26	- 40°C to + 85°C
AME8814FEEY	AIJww	3.6V	SOT-26	- 40°C to + 85°C
AME8814FEEYL	AIJww	3.6V	TSOT-26	- 40°C to + 85°C
AME8814FEEYY	AIJww	3.6V	TSOT-26	- 40°C to + 85°C
AME8814FEEYZ	AIJww	3.6V	SOT-26	- 40°C to + 85°C
AME8814GEEY	AIKww	3.5V	SOT-26	- 40°C to + 85°C
AME8814GEEYL	AIKww	3.5V	TSOT-26	- 40°C to + 85°C
AME8814GEEYY	AIKww	3.5V	TSOT-26	- 40°C to + 85°C
AME8814GEEYZ	AIKww	3.5V	SOT-26	- 40°C to + 85°C
AME8814HEEY	AILww	2.7V	SOT-26	- 40°C to + 85°C
AME8814HEEYL	AILww	2.7V	TSOT-26	- 40°C to + 85°C
AME8814HEEYY	AILww	2.7V	TSOT-26	- 40°C to + 85°C
AME8814HEEYZ	AILww	2.7V	SOT-26	- 40°C to + 85°C
AME8814IEEY	AIMww	3.4V	SOT-26	- 40°C to + 85°C
AME8814IEEYL	AIMww	3.4V	TSOT-26	- 40°C to + 85°C
AME8814IEEYY	AIMww	3.4V	TSOT-26	- 40°C to + 85°C
AME8814IEEYZ	AIMww	3.4V	SOT-26	- 40°C to + 85°C
AME8814JEEY	AINww	2.85V	SOT-26	- 40°C to + 85°C
AME8814JEEYL	AINww	2.85V	TSOT-26	- 40°C to + 85°C
AME8814JEEYY	AINww	2.85V	TSOT-26	- 40°C to + 85°C
AME8814JEEYZ	AINww	2.85V	SOT-26	- 40°C to + 85°C
AME8814KEEY	AIOww	3.7V	SOT-26	- 40°C to + 85°C
AME8814KEEYL	AIOww	3.7V	TSOT-26	- 40°C to + 85°C
AME8814KEEYY	AIOww	3.7V	TSOT-26	- 40°C to + 85°C
AME8814KEEYZ	AIOww	3.7V	SOT-26	- 40°C to + 85°C

■ Ordering Information (contd.)

Part Number	Marking*	Output Voltage	Package	Operating Temp. Range
AME8814LEEY	AJDww	1.5V	SOT-26	- 40°C to + 85°C
AME8814LEEYL	AJDww	1.5V	TSOT-26	- 40°C to + 85°C
AME8814LEEYY	AJDww	1.5V	TSOT-26	- 40°C to + 85°C
AME8814LEEYZ	AJDww	1.5V	SOT-26	- 40°C to + 85°C
AME8814MEEY	AJEww	1.8V	SOT-26	- 40°C to + 85°C
AME8814MEEYL	AJEww	1.8V	TSOT-26	- 40°C to + 85°C
AME8814MEEYY	AJEww	1.8V	TSOT-26	- 40°C to + 85°C
AME8814MEEYZ	AJEww	1.8V	SOT-26	- 40°C to + 85°C
AME8814NEEY	AKYww	2.9V	SOT-26	- 40°C to + 85°C
AME8814NEEYL	AKYww	2.9V	TSOT-26	- 40°C to + 85°C
AME8814NEEYY	AKYww	2.9V	TSOT-26	- 40°C to + 85°C
AME8814NEEYZ	AKYww	2.9V	SOT-26	- 40°C to + 85°C
AME8814OEEY	AKZww	3.1V	SOT-26	- 40°C to + 85°C
AME8814OEEYL	AKZww	3.1V	TSOT-26	- 40°C to + 85°C
AME8814OEEYY	AKZww	3.1V	TSOT-26	- 40°C to + 85°C
AME8814OEEYZ	AKZww	3.1V	SOT-26	- 40°C to + 85°C
AME8814SEEY	ARDww	5.0V	SOT-26	- 40°C to + 85°C
AME8814SEEYL	ARDww	5.0V	TSOT-26	- 40°C to + 85°C
AME8814SEEYY	ARDww	5.0V	TSOT-26	- 40°C to + 85°C
AME8814SEEYZ	ARDww	5.0V	SOT-26	- 40°C to + 85°C

■ Absolute Maximum Ratings

Parameter	Maximum	Unit
Input Voltage	8	V
Output Current	P_D / (V_{IN} - V_O)	mA
Input, Output Voltage	GND - 0.3 to V_{IN} + 0.3	V
ESD Classification	B	

Caution: Stress above the listed absolute maximum rating may cause permanent damage to the device

■ Recommended Operating Conditions

Parameter	Rating	Unit
Ambient Temperature Range	- 40 to + 85	^oC
Junction Temperature	- 40 to + 125	^oC

■ Thermal Information

Parameter	Package	Die Attach	Symbol	Maximum	Unit
Thermal Resistance* (Junction to Case)	SOT-26	Conductive Epoxy	θ_{JA}	81	^oC / W
		Non-Conductive Epoxy		140	
Thermal Resistance (Junction to Ambient)		Conductive Epoxy	θ_{JC}	260	
		Non-Conductive Epoxy		280	
Internal Power Dissipation		Conductive Epoxy	P_D	400	mW
		Non-Conductive Epoxy		400	
Maximum Junction Temperature				150	^oC
Maximum Lead Temperature (10 Sec)				300	

■ Electrical Specifications

TA = 25°C unless otherwise noted

Parameter	Symbol	Test Condition		Min	Typ	Max	Units
Input Voltage	V_{IN}			Note 1		7	V
Output Voltage Accuracy	V_O	I_O=1mA		-1.5		1.5	%
Dropout Voltage	$V_{DROPOUT}$	I_O=300mA V_O=$V_{O(NOM)}$ -2.0%	1.2V<=$V_{O(NOM)}$<=2.0V		See chart	1300	mV
			2.0V<$V_{O(NOM)}$<=2.8V			400	
			2.8V<$V_{O(NOM)}$			300	
Output Current	I_O	V_O>1.2V		300			mA
Current Limit	I_{LIM}	V_O>1.2V		300	450		mA
Short Circuit Current	I_{SC}	V_O<0.8V			150	300	mA
Quiescent Current	I_Q	I_O=0mA			30	50	µA
Ground Pin Current	I_{GND}	I_O=1mA to 300mA			35		µA
Line Regulation	REG_{LINE}	I_O=1mA V_{IN}=V_O+1 to V_O+2	1.2V <= V_O <= 1.4V	-0.2		0.2	%
			1.4V < V_O <= 2.0V	-0.15		0.15	
			2.0V< V_O < 4.0V	-0.1	0.02	0.1	
			4.0V <= Vo	-0.4	0.2	0.4	
Load Regulation	REG_{LOAD}	I_O=1mA to 300mA		-1	0.2	1	%
Over Temperature Shutdown	OTS				150		°C
Over Temperature Hysterisis	OTH				30		°C
V_O Temperature Coefficient	TC				30		ppm/°C
Power Supply Rejection	PSRR	I_O=100mA C_O=2.2µF	f=1kHz		50		dB
			f=10kHz		20		
			f=100kHz		15		
Output Voltage Noise	eN	f=10Hz to 100kHz I_O=10mA	Co=2.2µF		30		µVrms
EN Input Threshold	V_{EH}	V_{IN}=2.7V to 7V		2.0		Vin	V
	V_{EL}	V_{IN}=2.7V to 7V		0		0.4	V
EN Input Bias Current	I_{EH}	V_{EN}=V_{IN}, V_{IN}=2.7V to 7V				0.1	µA
	I_{EL}	V_{EN}=0V, V_{IN}=2.7V to 7V				0.5	µA
Shutdown Supply Current	I_{SD}	V_{IN}=5V, V_O=0V, V_{EN}<V_{EL}			0.5	1	µA
Shutdown Output Voltage	$V_{O,SD}$	I_O=0.4mA, V_{EN}<V_{EL}		0		0.4	V
Output Under Voltage	V_{UV}	2.5V <= $V_{O(NOM)}$ <= 5.0V				85	%$V_{O(NOM)}$
		1.2V <= $V_{O(NOM)}$ < 2.5V				75	
Output Over Voltage	V_{OV}	2.5V <= $V_{O(NOM)}$ <= 5.0V		115			%$V_{O(NOM)}$
		1.2V <= $V_{O(NOM)}$ < 2.5V		125			
PG Leakage Current	I_{LC}	V_{PG}=7V				1	µA
PG Voltage Rating	V_{PG}	V_O in regulation				7	V
PG Voltage Low	V_{OL}	I_{SINK}=0.4mA				0.4	V

Note1: $V_{IN(MIN)}$=V_{OUT}+$V_{DROPOUT}$

Note2: To prevent the Short Circuit Current protection feature from being prematurely activated, the input voltage must be applied before a current source load is applied.

■ Detailed Description

The AME8803/8814 family of CMOS regulators contain a PMOS pass transistor, voltage reference, error amplifier, over-current protection, thermal shutdown, and Power Good detection circuitry.

The P-channel pass transistor receives data from the error amplifier, over-current shutdown, and thermal protection circuits. During normal operation, the error amplifier compares the output voltage to a precision reference. Over-current and Thermal shutdown circuits become active when the junction temperature exceeds 150°C, or the current exceeds 300mA. During thermal shutdown, the output voltage remains low. Normal operation is restored when the junction temperature drops below 120°C.

The AME8803/8814 switches from voltage mode to current mode when the load exceeds the rated output current. This prevents over-stress. The AME8803 also incorporates current foldback to reduce power dissipation when the output is short circuited. This feature becomes active when the output drops below 0.8volts, and reduces the current flow by 65%. Full current is restored when the voltage exceeds 0.8 volts.

■ External Capacitors

The AME8803/8814 is stable with an output capacitor to ground of 2.2µF or greater. Ceramic capacitors have the lowest ESR, and will offer the best AC performance. Conversely, Aluminum Electrolytic capacitors exhibit the highest ESR, resulting in the poorest AC response. Unfortunately, large value ceramic capacitors are comparatively expensive. One option is to parallel a 0.1µF ceramic capacitor with a 10µF Aluminum Electrolytic. The benefit is low ESR, high capacitance, and low overall cost.

A second capacitor is recommended between the input and ground to stabilize Vin. The input capacitor should be at least 0.1µF to have a beneficial effect.

A third capacitor can be connected between the BYPASS pin and GND. This capacitor can be a low cost Polyester Film variety between the value of 0.001 ~ 0.01µF. A larger capacitor improves the AC ripple rejection, but also makes the output come up slowly. This "Soft" turn-on is desirable in some applications to limit turn-on surges.

All capacitors should be placed in close proximity to the pins. A "Quiet" ground termination is desirable. This can be achieved with a "Star" connection.

■ Enable

The Enable pin normally floats high. When actively, pulled low, the PMOS pass transistor shuts off, and all internal circuits are powered down. In this state, the quiescent current is less than 1µA. This pin behaves much like an electronic switch.

■ Power Good

The AME8803/8814 includes the Power Good feature. When the output is not within ±15% of the specified voltage, it pulls low. This can occur under the following conditions:

1) Input Voltage too low.
2) During Over-Temperature.
3) During Over-Current.
4) If output is pulled up.

(Note: PG pin is an open-drain output.)

Ground Current vs. Input Voltage

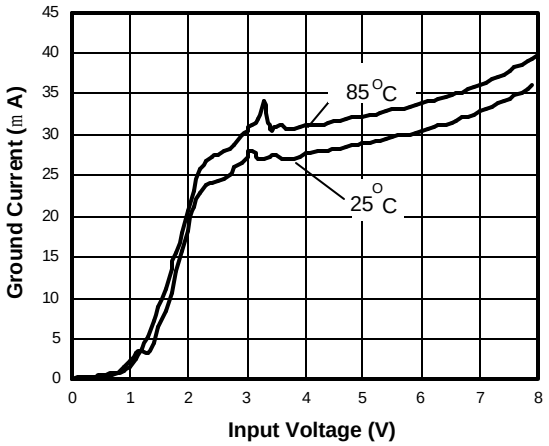

Load Step (1mA-300mA)

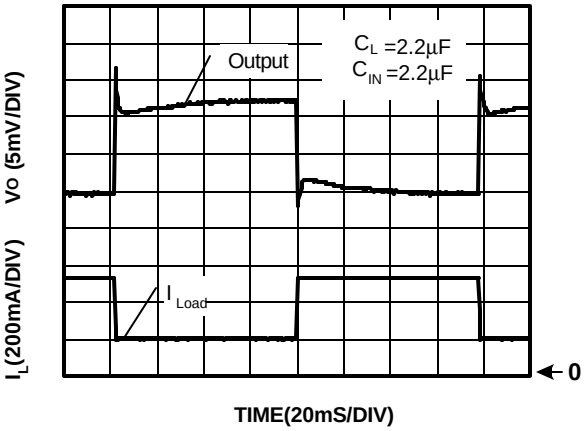

Chip Enable Transient Response

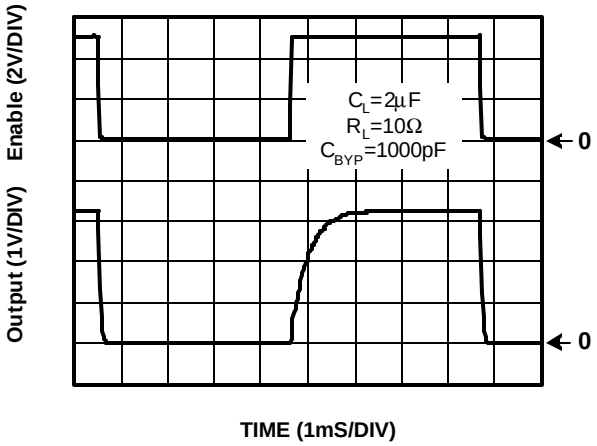

Chip Enable Transient Response

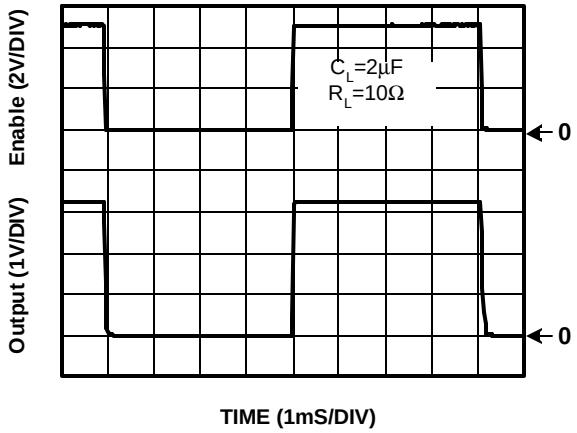

Drop Out Voltage vs. Output Voltage

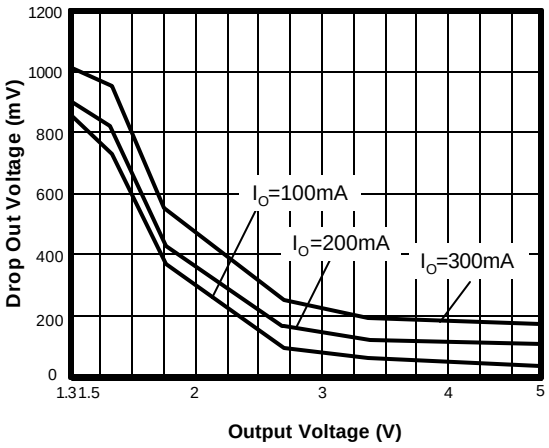

Drop Out Voltage vs. Load Current

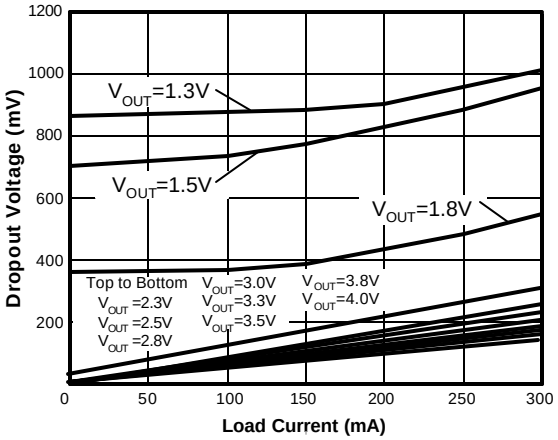

Power Supply Rejection Ratio

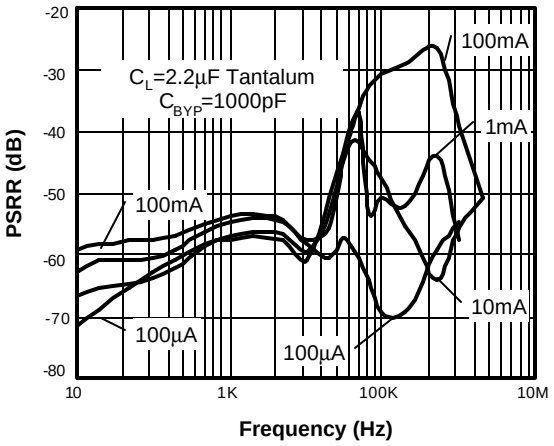

Power Supply Rejection Ratio

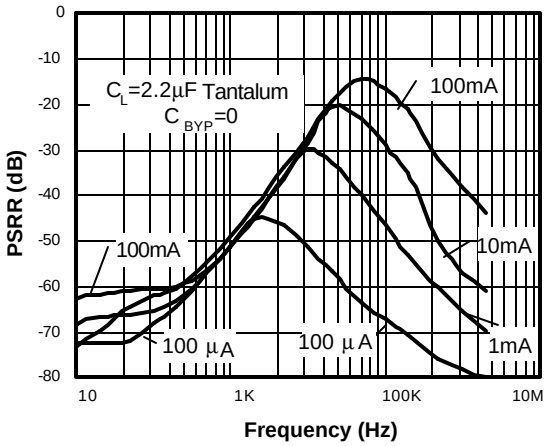

Power Supply Rejection Ratio

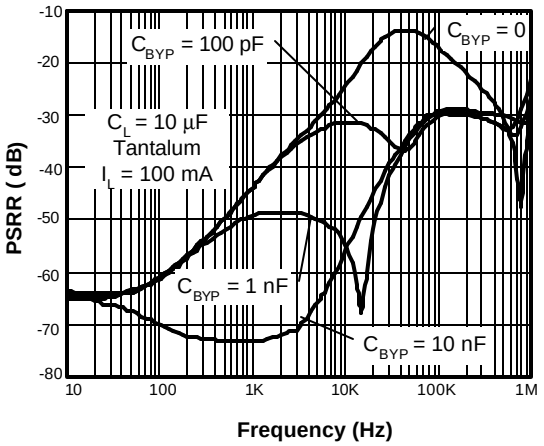

Power Supply Rejection Ratio

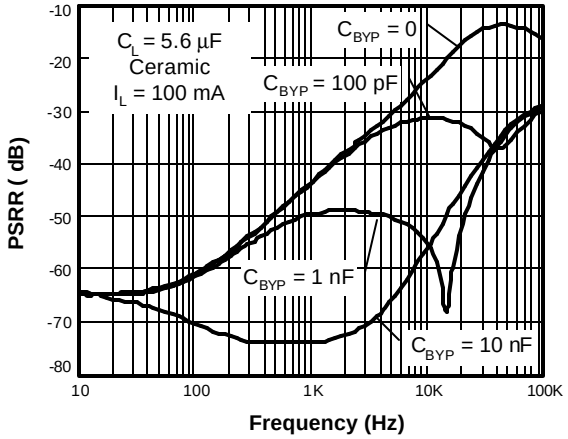

Short Circuit Response

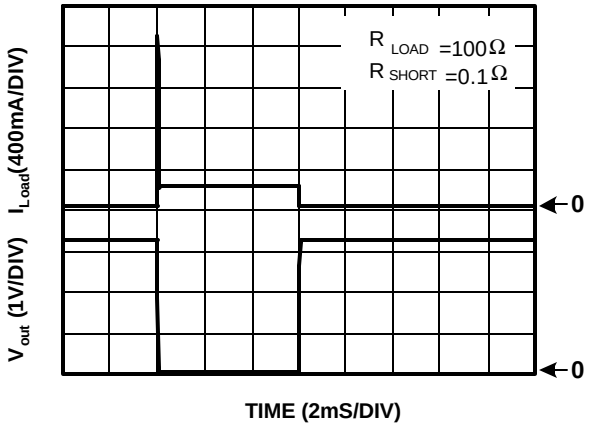

Overtemperature Shutdown

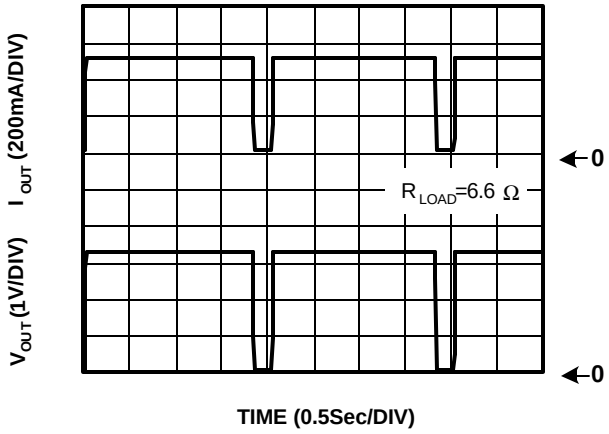

Current Limit Response

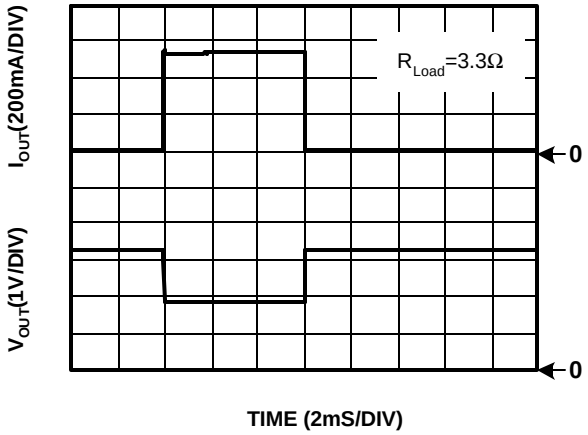

Noise Measurement

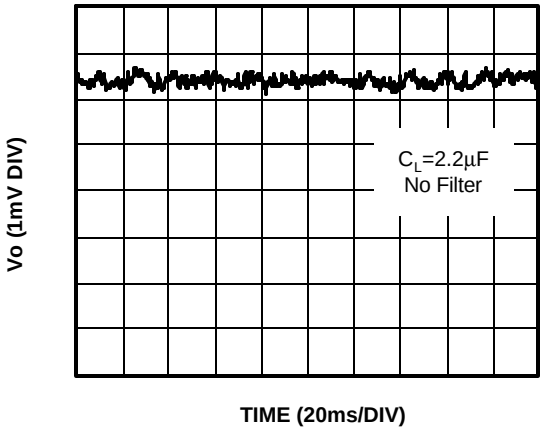

Line Transient Response

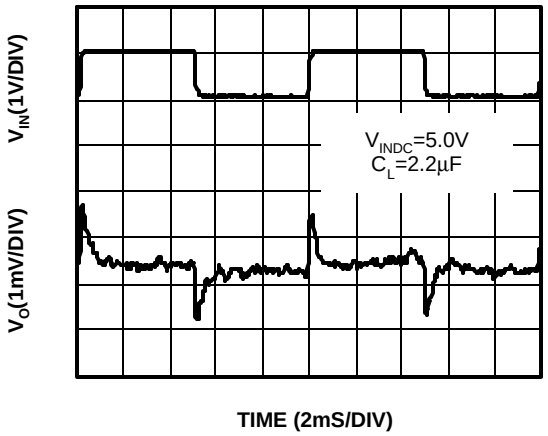

Safe Operating Area

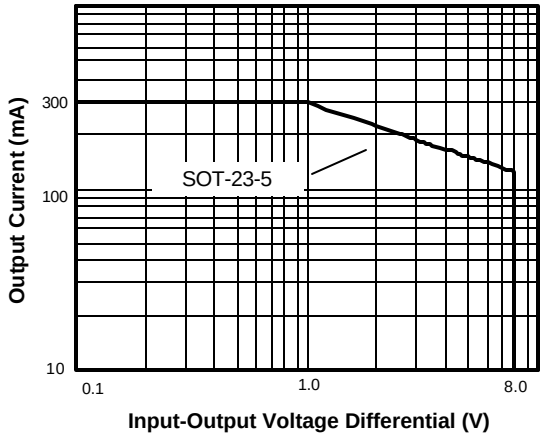

Stability vs. ESR vs. I_{Load}

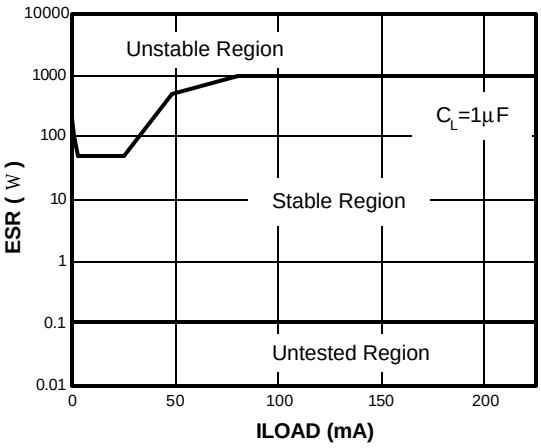

Stability vs. ESR vs. I_{Load}

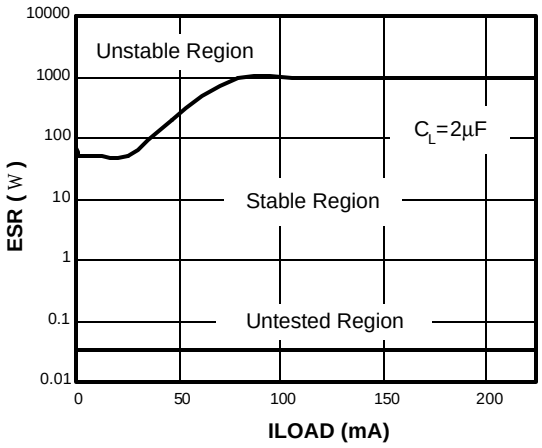

Stability vs. ESR vs. I_{Load}

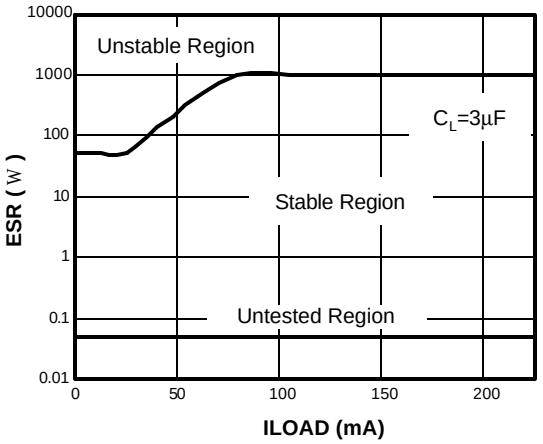

Stability vs. ESR vs. I_{Load}

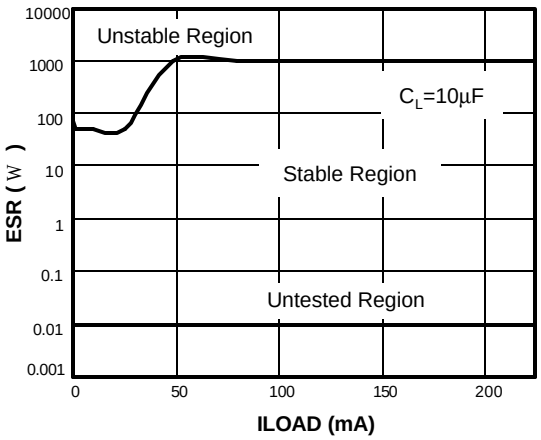

Quiescent Current vs. Temp.

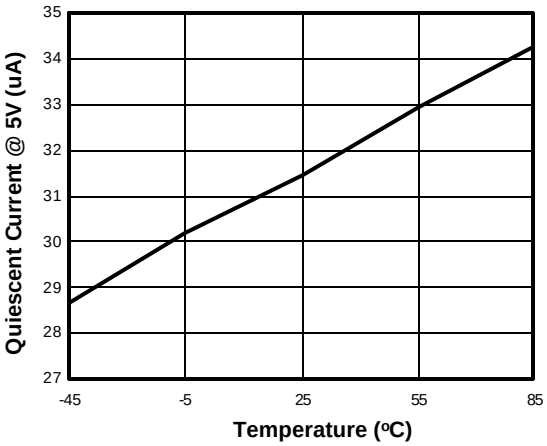

Load Regulation vs. Temp.

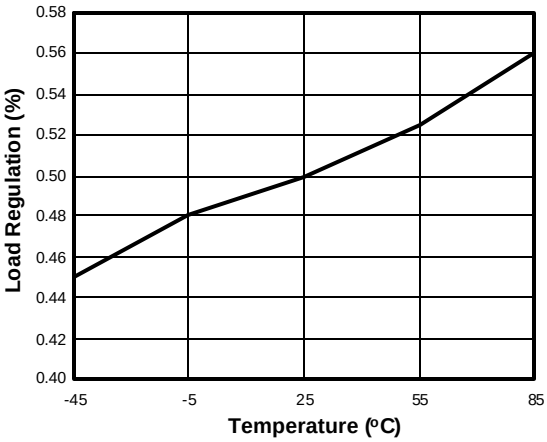

Shut Down Current vs. Temp.

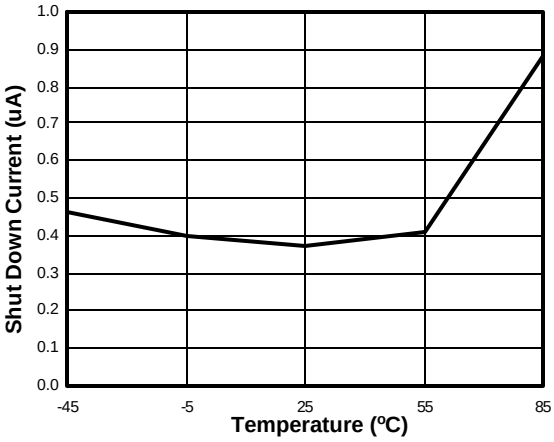

EN pin LO bias Current vs. Temp.

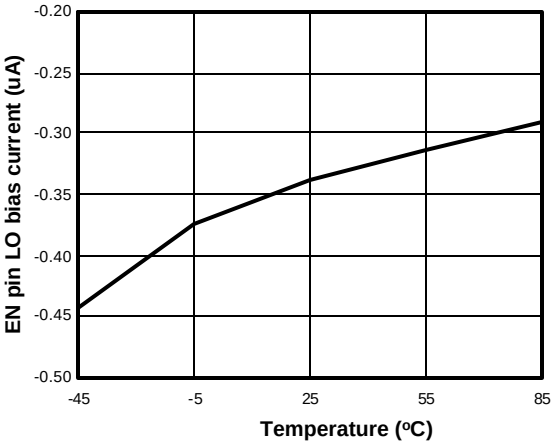

Dropout Voltage vs. Temp.

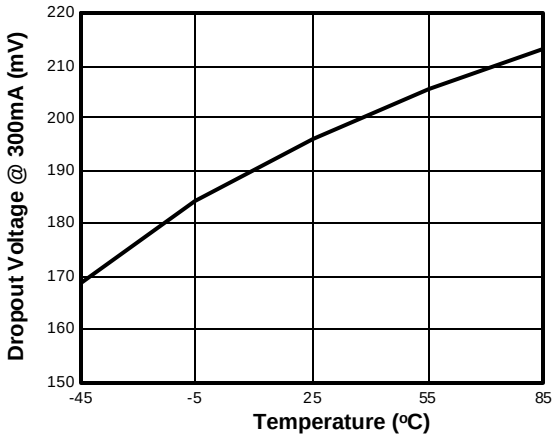

PG VOL vs. Temp.

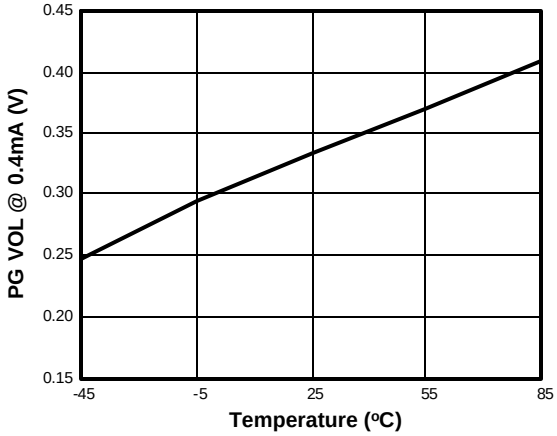

■ Date Code Rule

Marking			Date Code		Year
A	A	A	W	W	xxx0
A	A	A	W	W	xxx1
A	A	A	W	W	xxx2
A	A	A	W	W	xxx3
A	A	A	W	W	xxx4
A	A	A	W	W	xxx5
A	A	A	W	W	xxx6
A	A	A	W	W	xxx7
A	A	A	W	W	xxx8
A	A	A	W	W	xxx9

■ Tape and Reel Dimension

SOT-26

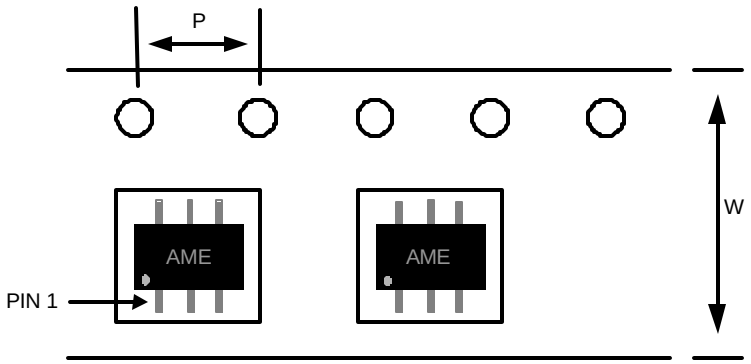

Carrier Tape, Number of Components Per Reel and Reel Size

Package	Carrier Width (W)	Pitch (P)	Part Per Full Reel	Reel Size
SOT-26	8.0±0.1 mm	4.0±0.1 mm	3000pcs	180±1 mm

■ Tape and Reel Dimension

TSOT-26

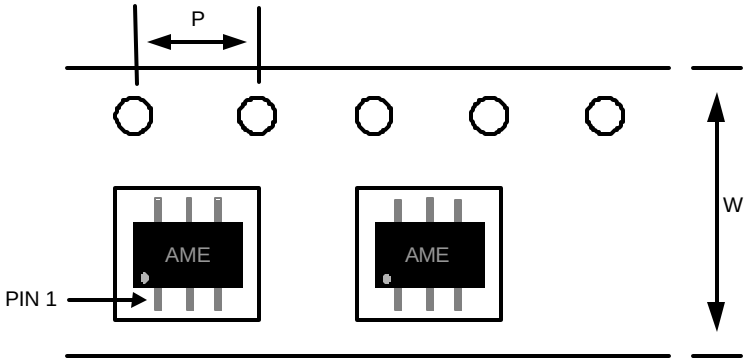

Carrier Tape, Number of Components Per Reel and Reel Size

Package	Carrier Width (W)	Pitch (P)	Part Per Full Reel	Reel Size
TSOT-26	8.0±0.1 mm	4.0±0.1 mm	3000pcs	180±1 mm

■ Package Dimension

SOT-26

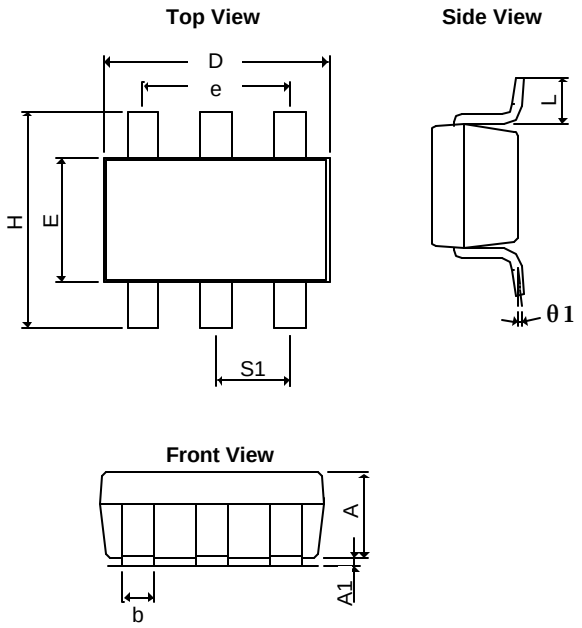

SYMBOLS	MILLIMETERS		INCHES	
	MIN	MAX	MIN	MAX
A	1.20REF		0.0472REF	
A_1	0.00	0.15	0.0000	0.0059
b	0.30	0.55	0.0118	0.0217
D	2.70	3.10	0.1063	0.1220
E	1.40	1.80	0.0551	0.0709
e	1.90 BSC		0.0748 BSC	
H	2.60	3.00	0.10236	0.11811
L	0.37REF		0.0146REF	
q1	0°	10°	0°	10°
S_1	0.95REF		0.0374REF	

TSOT-26

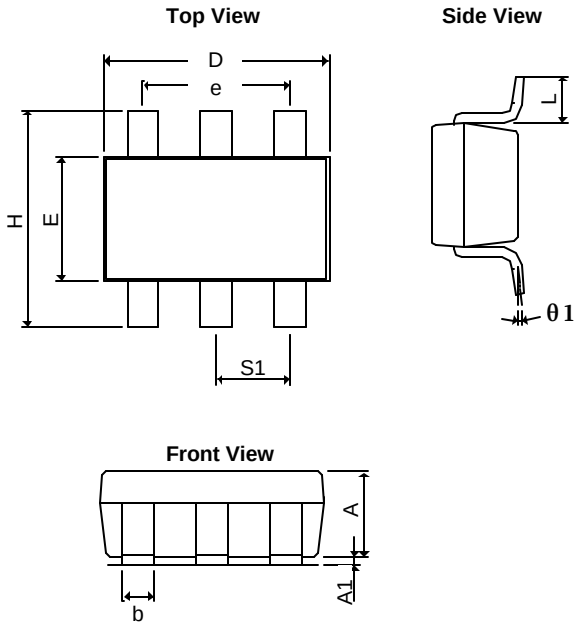

SYMBOLS	MILLIMETERS		INCHES	
	MIN	MAX	MIN	MAX
$A+A_1$	0.90	1.25	0.0354	0.0492
b	0.30	0.50	0.0118	0.0197
c	0.09	0.25	0.0035	0.0098
D	2.70	3.10	0.1063	0.1220
E	1.40	1.80	0.0551	0.0709
e	1.90 BSC		0.07480 BSC	
H	2.40	3.00	0.09449	0.11811
L	0.35BSC		0.0138BSC	
q1	0°	10°	0°	10°
S_1	0.95BSC		0.0374BSC	

www.ame.com.tw
E-Mail: sales@ame.com.tw

Life Support Policy:
These products of AME, Inc. are not authorized for use as critical components in life-support devices or systems, without the express written approval of the president of AME, Inc.

AME, Inc. reserves the right to make changes in the circuitry and specifications of its devices and advises its customers to obtain the latest version of relevant information.

© AME, Inc. , November 2005

Document: 2006-DS8803/8814-H

Corporate Headquarter
AME, Inc.
2F, 302 Rui-Guang Road, Nei-Hu District
Taipei 114, Taiwan.
Tel: 886 2 2627-8687
Fax: 886 2 2659-2989

U.S.A.(Subsidiary)
Analog Microelectronics, Inc.
3100 De La Cruz Blvd., Suite 201
Santa Clara, CA. 95054-2046
Tel : (408) 988-2388
Fax: (408) 988-2489

中发网 WWW.ZFA.CN

全球最大的PDF中文下载站

中发网
www.zfa.cn

PDF 资料下载尽在中发网

版权所有 中发飞询 京ICP证041662号 Copyright © 2004-2005 www.zfa.cn All Rights Reserved
客服热线： 深圳 0755-83278916，83278919 北京 010-62632888，62636888