USER MANUAL

P89LPC920/921/922

80C51 8-bit microcontroller with two-clock core

2 KB/4 KB/8 KB 3 V low-power Flash with 256 Byte RAM

2003 Nov 6

Philips Semiconductors

PHILIPS

Table of Contents

1. General Description 9
Pin configuration 9
20-Pin TSSOP, DIP Package 9
Logic symbol 9
Pin Descriptions 11
Special Function Registers 14
Memory organization 18
Data RAM arrangement 19
2. Clocks 21
Enhanced CPU 21
Clocks 21
Clock definitions 21
Oscillator clock (OSCCLK) 21
Low speed oscillator option 21
Medium speed oscillator option 21
High speed oscillator option 21
Clock output 21
On-chip RC oscillator option 22
Watchdog oscillator option 22
External clock input option 23
Oscillator Clock (OSCCLK) wakeup delay 23
CPU Clock (CCLK) modification: DIVM register 23
Low power select 24
3. Interrupts 25
Interrupt priority structure 25
External Interrupt pin glitch suppression 26
4. I/O Ports 29
Port configurations 29
Quasi-bidirectional output configuration 29
Open drain output configuration 30
Input-only configuration 31
Push-pull output configuration 31
Port 0 analog functions 31
Additional port features 32
5. Power Monitoring Functions 33
Brownout Detection 33
Power-on Detection 34
Power reduction modes 34
6. Reset 39
Reset vector 40
7. Timers 0 and 1 41

Mode 0 ... 42
Mode 1 ... 42
Mode 2 ... 43
Mode 3 ... 43
Mode 6 ... 43
Timer overflow toggle output ... 46
8. Real-Time Clock/System Timer ... 47
Real-time Clock source ... 47
Changing RTCS1-0 ... 47
Real-time Clock interrupt/wake up ... 48
Reset sources affecting the Real-time Clock ... 48
9. UART ... 51
Mode 0 ... 51
Mode 1 ... 51
Mode 2 ... 51
Mode 3 ... 51
SFR space ... 51
Baud Rate Generator and selection ... 52
Updating the BRGR1 and BRGR0 SFRs ... 52
Framing Error ... 53
Break Detect ... 53
More about UART Mode 0 ... 55
More about UART Mode 1 ... 56
More about UART Modes 2 and 3 ... 57
Framing Error and RI in Modes 2 and 3 with SM2 = 1 ... 57
Break Detect ... 57
Double buffering ... 58
Double buffering in different modes ... 58
Transmit interrupts with double buffering enabled (Modes 1, 2 and 3) ... 58
The 9th bit (bit 8) in double buffering (Modes 1, 2 and 3) ... 59
Multiprocessor communications ... 60
Automatic address recognition ... 60
10. I2C interface ... 63
I2C Data register ... 64
I2C Slave Address register ... 64
I2C Control register ... 64
I2C Status register ... 66
I2C SCL Duty Cycle registers I2SCLH and I2SCLL ... 66
I2C operation mode ... 67
Master Transmitter Mode ... 67
Master Receiver Mode ... 68
Slave Receiver Mode ... 69
Slave Transmitter Mode ... 69
11. Analog comparators ... 79

Comparator configuration ... 79
Internal reference voltage ... 80
Comparator interrupt ... 80
Comparators and power reduction modes ... 80
Comparator configuration example ... 81
12. Keypad Interrupt (KBI) ... 83
13. Watchdog Timer ... 85
Watchdog Function ... 85
Feed Sequence ... 86
Watchdog Clock Source ... 88
Watchdog Timer in Timer Mode ... 89
Power down operation ... 90
Periodic wakeup from Power down without an external oscillator ... 90
14. Additional Features ... 91
Software reset ... 91
Dual Data Pointers ... 91
15. Flash Memory ... 93
General description ... 93
Features ... 93
Flash programming and erase ... 93
Using Flash as data storage: IAP-Lite ... 93
In-Circuit Programming (ICP) ... 97
ISP and IAP capabilities of the P89LPC920/921/922 ... 97
Boot ROM ... 98
Power-On reset code execution ... 98
Hardware activation of the Boot Loader ... 98
In-System Programming (ISP) ... 99
Using the In-System Programming ... 99
In-Application Programming method ... 104
IAP Authorization Key ... 104
User configuration bytes ... 109
User security bytes ... 110
Boot Vector ... 111
Boot Status ... 111
16. Instruction set ... 113
17. Revision History ... 117
18. Index ... 119

List of Figures

P89LPC920/921/922 memory map 18
On-chip data memory usage. 19
Using the crystal oscillator. 22
On-chip RC oscillator TRIM register 22
Block diagram of oscillator control. 23
Interrupt priority level. 25
Summary of interrupts 26
Interrupt sources, interrupt enables, and power down wake-up sources 27
.Number of I/O pins available 29
Port output configuration settings 29
Quasi-bidirectional output 30
Open drain output 30
Input -only 31
Push-pull output 31
Port output configuration 32
Brownout options. 34
Power reduction modes. 35
Power Control register (PCON). 36
Power Control register A (PCONA). 37
Block diagram of Reset 39
Reset Sources register 40
Timer/Counter Mode Control register (TMOD) 41
Timer/Counter Auxiliary Mode Control register (TAMOD). 42
Timer/Counter Control register (TCON) 44
Timer/Counter 0 or 1 in Mode 0 (13-bit counter). 44
Timer/Counter 0 or 1 in Mode 1 (16-bit counter). 45
Timer/Counter 0 or 1 in Mode 2 (8-bit auto-reload). 45
Timer/Counter 0 Mode 3 (two 8-bit counters) 45
Timer/Counter 0 or 1 in Mode 6 (PWM auto-reload). 46
Real-time Clock/System Timer block diagram 47
Real-time Clock/System Timer clock sources 48
RTCCON Register. 49
SFR Locations for UARTs. 51
Baud rate generation for UART. 52
BRGCON register 53
Baud rate generation for UART (Modes 1, 3) 53
Serial Port Control register (SCON) 54
Serial Port Status register (SSTAT) 55
Serial Port Mode 0 (double buffering must be disabled). 56
Serial Port Mode 1 (only single transmit buffering case is shown) 56
Serial Port Mode 2 or 3 (only single transmit buffering case is shown). 57
FE and RI when SM2 = 1 in Modes 2 and 3 57
Transmission with and without double buffering 59

I2C-bus configuration 63
I2C Data register 64
I2C Slave Address register 64
I2C Control register 65
I2C Status register. 66
I2C clock rates selection 66
I2C Control register 67
Format in the Master Transmitter Mode 68
Format of Master Receiver Mode 68
A Master Receiver switches to Master Transmitter after sending Repeated Start 68
I2C Control register 69
Format of Slave Receiver Mode 69
Format of Slave Transmitter Mode 70
I2C-bus serial interface block diagram 71
Master Transmitter Mode 72
Master Receiver Mode 73
Slave Receiver Mode 74
Slave Transmitter Mode 77
Comparator control registers (CMP1 and CMP2) 79
Comparator input and output connections 80
Comparator configurations 81
Keypad Pattern register. 83
Keypad Control register. 83
Keypad Interrupt Mask register (KBM) 84
Watchdog timer configuration.. 85
Watchdog Prescaler 86
Watchdog Timer Control Register 87
P89LPC920/921/922 Watchdog Timeout Values.. 88
Watchdog Timer in Watchdog Mode (WDTE = 1). 89
Watchdog Timer in Timer Mode (WDTE = 0) 90
AUXR1 register 91
Flash Memory Control Registe 95
Assembly language routine to erase/program all or part of a page. 96
C-language routine to erase/program all or part of a page 97
Boot Loader Address and Default Boot Vector 98
Forcing ISP Mode 99
In-System Programming (ISP) hex record formats 100
IAP error status 105
IAP function calls. 105
Flash User Configuration Byte 1 (UCFG1) 109
User sector Security Bytes (SEC0, ..., SEC7). 110
Effects of Security Bits 110
Boot Vector (BOOTVEC). 111
Boot Status (BOOTSTAT). 111
Instruction set summary 113

1. General Description

The **P89LPC920/921/922** is a single-chip microcontroller designed for applications demanding high-integration, low cost solutions over a wide range of performance requirements. The **P89LPC920/921/922** is based on a high performance processor architecture that executes instructions in two to four clocks, six times the rate of standard 80C51 devices. Many system level functions have been incorporated into the **P89LPC920/921/922** in order to reduce component count, board space, and system cost.

Pin configuration

20-Pin TSSOP, DIP Package

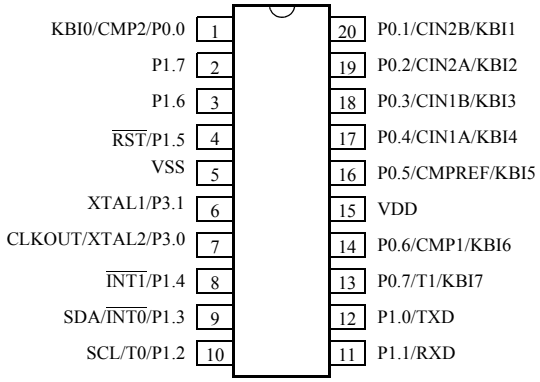

Logic symbol

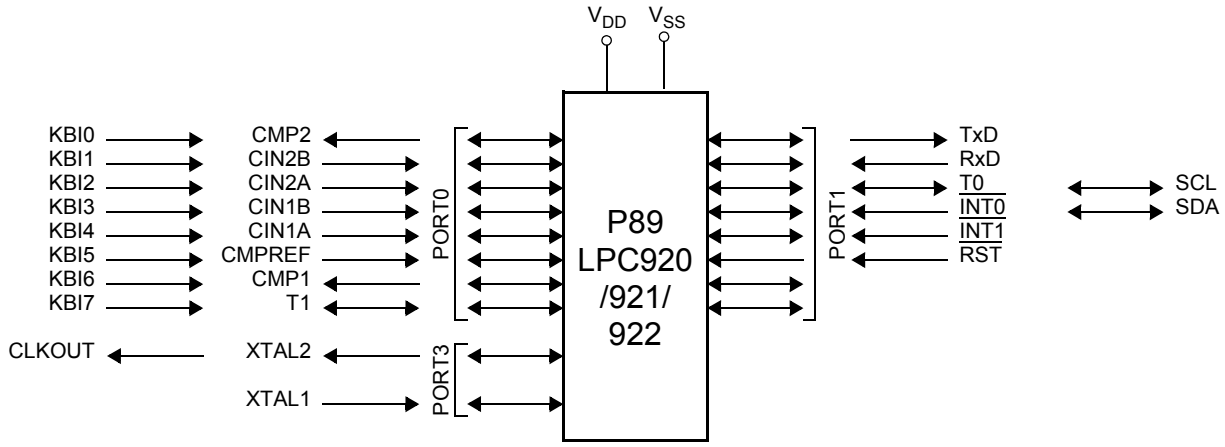

Block diagram

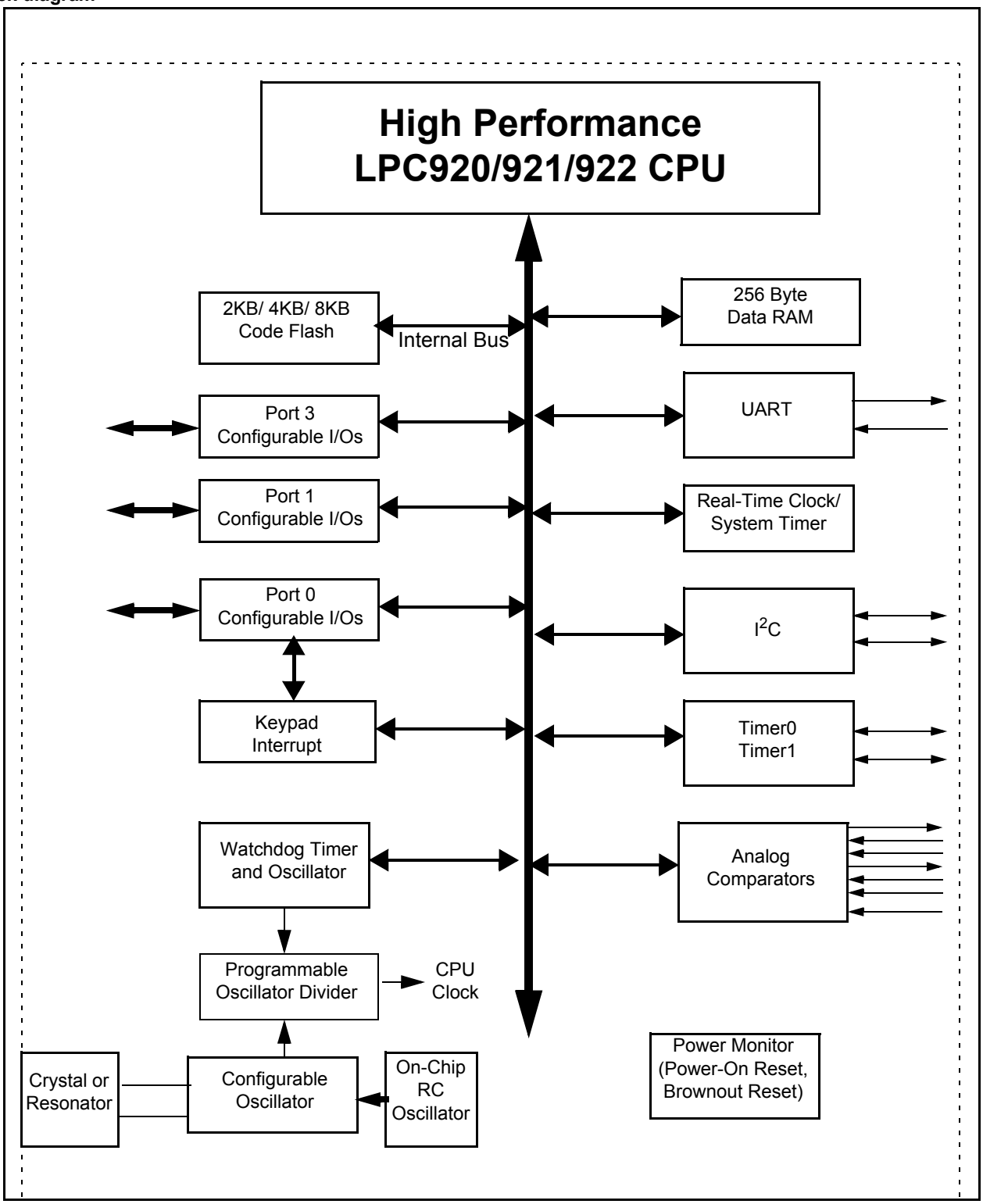

Pin Descriptions

Mnemonic	Pin no.	Type	Name and function
P0.0 - P0.7	1, 20, 19, 18, 17, 16, 14, 13	I/O	**Port 0:** Port 0 is an 8-bit I/O port with a user-configurable output type. During reset Port 0 latches are configured in the input only mode with the internal pullup disabled. The operation of port 0 pins as inputs and outputs depends upon the port configuration selected. Each port pin is configured independently. Refer to the section on I/O port configuration and the DC Electrical Characteristics for details. The Keypad Interrupt feature operates with port 0 pins. All pins have Schmitt triggered inputs. Port 0 also provides various special functions as described below.
	1	I/O	**P0.0** Port 0 bit 0.
		O	**CMP2** Comparator 2 output.
		I	**KBI0** Keyboard Input 0.
	20	I/O	**P0.1** Port 0 bit 1.
		I	**CIN2B** Comparator 2 positive input B.
		I	**KBI1** Keyboard Input 1.
	19	I/O	**P0.2** Port 0 bit 2.
		I	**CIN2A** Comparator 2 positive input A.
		I	**KBI2** Keyboard Input 2.
	18	I/O	**P0.3** Port 0 bit 3.
		I	**CIN1B** Comparator 1 positive input B.
		I	**KBI3** Keyboard Input 3.
	17	I/O	**P0.4** Port 0 bit 4.
		I	**CIN1A** Comparator 1 positive input A.
		I	**KBI4** Keyboard Input 4.
	16	I/O	**P0.5** Port 0 bit 5.
		I	**CMPREF** Comparator reference (negative) input.
		I	**KBI5** Keyboard Input 5.
	14	I/O	**P0.6** Port 0 bit 6.
		O	**CMP1** Comparator 1 output.
		I	**KBI6** Keyboard Input 6.
	13	I/O	**P0.7** Port 0 bit 7.
		I/O	**T1** Timer/counter 1 external count input or overflow output.
		I	**KBI7** Keyboard Input 7.

Mnemonic	Pin no.	Type	Name and function
P1.0 - P1.7	12, 11, 10, 9, 8, 4, 3, 2	I/O (for P1.0-P1.4, P1.6-P1.7), I (for P1.5)	**Port 1:** Port 1 is an 8-bit I/O port with a user-configurable output type, except for three pins as noted below. During reset Port 1 latches are configured in the input only mode with the internal pullup disabled. The operation of the configurable port 1 pins as inputs and outputs depends upon the port configuration selected. Each of the configurable port pins are programmed independently. Refer to the section on I/O port configuration and the DC Electrical Characteristics for details. P1.2 - P1.3 are open drain when used as outputs. P1.5 is input only. All pins have Schmitt triggered inputs. Port 1 also provides various special functions as described below.
	12	I/O O	**P1.0** Port 1 bit 0. **TxD** Transmitter output for the serial port.
	11	I/O I	**P1.1** Port 1 bit 1. **RxD** Receiver input for the serial port.
	10	I/O I/O I/O	**P1.2** Port 1 bit 2. (Open-drain when used as outputs) **T0** Timer/counter 0 external count input or overflow output. (Open-drain when used as outputs) **SCL** I^2C serial clock input/output.
	9	I/O I I/O	**P1.3** Port 1 bit 3. (Open-drain when used as outputs) **$\overline{\text{INT0}}$** External interrupt 0 input. **SDA** I^2C serial data input/output.
	8	I/O I	**P1.4** Port 1 bit 4. **$\overline{\text{INT1}}$** External interrupt 1 input.
	4	I I	**P1.5** Port 1 bit 5. (Input only) **$\overline{\text{RST}}$** External Reset input (if selected via FLASH configuration). A low on this pin resets the microcontroller, causing I/O ports and peripherals to take on their default states, and the processor begins execution at address 0.
	3	I/O	**P1.6** Port 1 bit 6.
	2	I/O	**P1.7** Port 1 bit 7.
P3.0 - P3.1	7, 6	I/O	**Port 3:** Port 3 is an 2-bit I/O port with a user-configurable output type. During reset Port 3 latches are configured in the input only mode with the internal pullup disabled. The operation of port 3 pins as inputs and outputs depends upon the port configuration selected. Each port pin is configured independently. Refer to the section on I/O port configuration and the DC Electrical Characteristics for details. All pins have Schmitt triggered inputs. Port 3 also provides various special functions as described below:
	7	I/O O O	**P3.0** Port 3 bit 0. **XTAL2** Output from the oscillator amplifier (when a crystal oscillator option is selected via the FLASH configuration). **CLKOUT** CPU clock divided by 2 when enabled via SFR bit (ENCLK - TRIM.6). It can be used if the CPU clock is the internal RC oscillator, watchdog oscillator or external clock input, except when XTAL1/XTAL2 are used to generate clock source for the real time clock/system timer.

Mnemonic	Pin no.	Type	Name and function
	6	I/O	**P3.1** Port 3 bit 1.
		I	**XTAL1** Input to the oscillator circuit and internal clock generator circuits (when selected via the FLASH configuration). It can be a port pin if internal RC oscillator or watchdog oscillator is used as the CPU clock source, AND if XTAL1/XTAL2 are not used to generate the clock for the real time clock/system timer.
V_{SS}	5	I	**Ground:** 0V reference.
V_{DD}	15	I	**Power Supply:** This is the power supply voltage for normal operation as well as Idle and Power Down modes.

Special Function Registers

Note: Special Function Registers (SFRs) accesses are restricted in the following ways:

1. User must NOT attempt to access any SFR locations not defined.
2. Accesses to any defined SFR locations must be strictly for the functions for the SFRs.
3. SFR bits labeled '-', '0' or '1' can ONLY be written and read as follows:
   - '-' Unless otherwise specified, MUST be written with '0', but can return any value when read (even if it was written with '0'). It is a reserved bit and may be used in future derivatives.
   - '0' MUST be written with '0', and will return a '0' when read.
   - '1' MUST be written with '1', and will return a '1' when read

Name	Description	SFR Address	Bit Functions and Addresses (MSB → LSB)								Reset Value	
			E7	E6	E5	E4	E3	E2	E1	E0	Hex	Binary
ACC*	Accumulator	E0H									00H	00000000
AUXR1#	Auxiliary Function Register	A2H	CLKLP	EBRR	ENT1	ENT0	SRST	0	-	DPS	00H[1]	000000x0
			F7	F6	F5	F4	F3	F2	F1	F0		
B*	B Register	F0H									00H	00000000
BRGR0#§	Baud Rate Generator Rate Low	BEH									00H	00000000
BRGR1#§	Baud Rate Generator Rate High	BFH									00H	00000000
BRGCON#	Baud Rate Generator Control	BDH	-	-	-	-	-	-	SBRGS	BRGEN	00H[%]	xxxxxx00
CMP1#	Comparator 1 Control Register	ACH	-	-	CE1	CP1	CN1	OE1	CO1	CMF1	00H[1]	xx000000
CMP2#	Comparator 2 Control Register	ADH	-	-	CE2	CP2	CN2	OE2	CO2	CMF2	00H[1]	xx000000
DIVM#	CPU Clock Divide-by-M Control	95H									00H	00000000
DPTR	Data Pointer (2 bytes)											
DPH	Data Pointer High	83H									00H	00000000
DPL	Data Pointer Low	82H									00H	00000000
FMADRH#	Program Flash Address High	E7H									00H	00000000
FMADRL#	Program Flash Address Low	E6H									00H	00000000
FMCON#	Program Flash Control (Read)	E4H	BUSY	-	-	-	HVA	HVE	SV	OI	70H	01110000
	Program Flash Control (Write)		FMCMD.7	FMCMD.6	FMCMD.5	FMCMD.4	FMCMD.3	FMCMD.2	FMCMD.1	FMCMD.0		
FMDATA#	Program Flash Data	E5H									00H	00000000
I2ADR#	I^2C Slave Address Register	DBH	I2ADR.6	I2ADR.5	I2ADR.4	I2ADR.3	I2ADR.2	I2ADR.1	I2ADR.0	GC	00H	00000000
			DF	DE	DD	DC	DB	DA	D9	D8		
I2CON*#	I^2C Control Register	D8H	-	I2EN	STA	STO	SI	AA	-	CRSEL	00H	x00000x0
I2DAT#	I^2C Data Register	DAH										
I2SCLH#	Serial Clock Generator/SCL Duty Cycle Register High	DDH									00H	00000000

Name	Description	SFR Address	Bit Functions and Addresses MSB							LSB	Reset Value Hex	Binary
I2SCLL#	Serial Clock Generator/SCL Duty Cycle Register Low	DCH									00H	00000000
I2STAT#	I^2C Status Register	D9H	STA.4	STA.3	STA.2	STA.1	STA.0	0	0	0	F8H	11111000
ICRAH#												
			AF	AE	AD	AC	AB	AA	A9	A8		
IEN0*	Interrupt Enable 0	A8H	EA	EWDRT	EBO	ES/ESR	ET1	EX1	ET0	EX0	00H	00000000
			EF	EE	ED	EC	EB	EA	E9	E8		
IEN1*#	Interrupt Enable 1	E8H	-	EST	-	-	-	EC	EKBI	EI2C	00H[1]	00x00000
			BF	BE	BD	BC	BB	BA	B9	B8		
IP0*	Interrupt Priority 0	B8H	-	PWDRT	PBO	PS/PSR	PT1	PX1	PT0	PX0	00H[1]	x0000000
IP0H#	Interrupt Priority 0 High	B7H	-	PWDRTH	PBOH	PSH/PSRH	PT1H	PX1H	PT0H	PX0H	00H[1]	x0000000
			FF	FE	FD	FC	FB	FA	F9	F8		
IP1*#	Interrupt Priority 1	F8H	-	PST	-	-	-	PC	PKBI	PI2C	00H[1]	00x00000
IP1H#	Interrupt Priority 1 High	F7H	-	PSTH	-	-	-	PCH	PKBIH	PI2CH	00H[1]	00x00000
KBCON#	Keypad Control Register	94H	-	-	-	-	-	-	PATN_SEL	KBIF	00H[1]	xxxxxx00
KBMASK#	Keypad Interrupt Mask Register	86H									00H	00000000
KBPATN#	Keypad Pattern Register	93H									FFH	11111111
			87	86	85	84	83	82	81	80		
P0*	Port 0	80H	T1/KB7	CMP1/KBI6	CMPREF/KBI5	CIN1A/KBI4	CIN1B/KBI3	CIN2A/KBI2	CIN2B/KBI1	CMP2/KBI0	Note 1	
			97	96	95	94	93	92	91	90		
P1*	Port 1	90H	-	-	$\overline{RST}$	$\overline{INT1}$	$\overline{INT0}$/SDA	T0/SCL	RxD	TxD	Note 1	
			B7	B6	B5	B4	B3	B2	B1	B0		
P3*	Port 3	B0H	-	-	-	-	-	-	XTAL1	XTAL2	Note 1	
P0M1#	Port 0 Output Mode 1	84H	(P0M1.7)	(P0M1.6)	(P0M1.5)	(P0M1.4)	(P0M1.3)	(P0M1.2)	(P0M1.1)	(P0M1.0)	FFH	11111111
P0M2#	Port 0 Output Mode 2	85H	(P0M2.7)	(P0M2.6)	(P0M2.5)	(P0M2.4)	(P0M2.3)	(P0M2.2)	(P0M2.1)	(P0M2.0)	00H	00000000
P1M1#	Port 1 Output Mode 1	91H	(P1M1.7)	(P1M1.6)	-	(P1M1.4)	(P1M1.3)	(P1M1.2)	(P1M1.1)	(P1M1.0)	D3H[1]	11x11111
P1M2#	Port 1 Output Mode 2	92H	(P1M2.7)	(P1M2.6)	-	(P1M2.4)	(P1M2.3)	(P1M2.2)	(P1M2.1)	(P1M2.0)	00H[1]	00x00000
P3M1#	Port 3 Output Mode 1	B1H	-	-	-	-	-	-	(P3M1.1)	(P3M1.0)	03H[1]	xxxxxx11
P3M2#	Port 3 Output Mode 2	B2H	-	-	-	-	-	-	(P3M2.1)	(P3M2.0)	00H[1]	xxxxxx00
PCON#	Power Control Register	87H	SMOD1	SMOD0	BOPD	BOI	GF1	GF0	PMOD1	PMOD0	00H	00000000
PCONA#	Power Control Register A	B5H	RTCPD	-	VCPD		I2PD	-	SPD	-	00H[1]	00000000

Name	Description	SFR Address	Bit Functions and Addresses (MSB → LSB)								Reset Value	
			D7	D6	D5	D4	D3	D2	D1	D0	Hex	Binary
PSW*	Program Status Wword	D0H	CY	AC	F0	RS1	RS0	OV	F1	P	00H	00000000
PT0AD#	Port 0 Digital Input Disable	F6H	-	-	PT0AD.5	PT0AD.4	PT0AD.3	PT0AD.2	PT0AD.1	-	00H	xx00000x
RSTSRC#	Reset Source Register	DFH	-	-	BOF	POF	R_BK	R_WD	R_SF	R_EX	Note 2	
RTCCON#	Real-Time Clock Control	D1H	RTCF	RTCS1	RTCS0	-	-	-	ERTC	RTCEN	60H[1,5]	011xxx00
RTCH#	Real-Time Clock Register High	D2H									00H[5]	00000000
RTCL#	Real-Time Clock Register Low	D3H									00H[5]	00000000
SADDR#	Serial Port Address Register	A9H									00H	00000000
SADEN#	Serial Port Address Enable	B9H									00H	00000000
SBUF	Serial Port Data Buffer Register	99H									xxH	xxxxxxxx
			9F	9E	9D	9C	9B	9A	99	98		
SCON*	Serial Port Control	98H	SM0/FE	SM1	SM2	REN	TB8	RB8	TI	RI	00H	00000000
SSTAT#	Serial Port Extended Status Register	BAH	DBMOD	INTLO	CIDIS	DBISEL	FE	BR	OE	STINT	00H	00000000
SP	Stack Pointer	81H									07H	00000111
TAMOD#	Timer 0 and 1 Auxiliary Mode	8FH	-	-	-	T1M2	-	-	-	T0M2	00H	xxx0xxx0
			8F	8E	8D	8C	8B	8A	89	88		
TCON*	Timer 0 and 1 Control	88H	TF1	TR1	TF0	TR0	IE1	IT1	IE0	IT0	00H	00000000
TH0	Timer 0 High	8CH									00H	00000000
TH1	Timer 1 High	8DH									00H	00000000
TL0	Timer 0 Low	8AH									00H	00000000
TL1	Timer 1 Low	8BH									00H	00000000
TMOD	Timer 0 and 1 Mode	89H	T1GATE	T1C/T	T1M1	T1M0	T0GATE	T0C/T	T0M1	T0M0	00H	00000000
TRIM#	Internal Oscillator Trim Register	96H	-	ENCLK	TRIM.5	TRIM.4	TRIM.3	TRIM.2	TRIM.1	TRIM.0	Notes 4,5	
WDCON#	Watchdog Control Register	A7H	PRE2	PRE1	PRE0	-	-	WDRUN	WDTOF	WDCLK	Notes 3,5	
WDL#	Watchdog Load	C1H									FFH	11111111
WFEED1#	Watchdog Feed 1	C2H										
WFEED2#	Watchdog Feed 2	C3H										

Notes:

* SFRs are bit addressable.

\# SFRs are modified from or added to the 80C51 SFRs.

\- Reserved bits, must be written with 0's.

§ BRGR1 and BRGR0 must only be written if BRGEN in BRGCON SFR is '0'. If any of them is written if BRGEN = 1, result is unpredictable.

Unimplemented bits in SFRs (labeled '-') are X (unknown) at all times. Unless otherwise specified, ones should not be written to these bits since they may be used for other purposes in future derivatives. The reset values shown for these bits are '0's although they are unknown when read.

1. All ports are in input only (high impendance) state after power-up.
2. The RSTSRC register reflects the cause of the LPC920/921/922 reset. Upon a power-up reset, all reset source flags are cleared except POF and BOF - the power-on reset value is xx110000.
3. After reset, the value is 111001x1, i.e., PRE2-PRE0 are all 1, WDRUN=1 and WDCLK=1. WDTOF bit is 1 after watchdog reset and is 0 after power-on reset. Other resets will not affect WDTOF.
4. On power-on reset, the TRIM SFR is initialized with a factory preprogrammed value. Other resets will not cause initialization of the TRIM register.
5. The only reset source that affects these SFRs is power-on reset.

Memory organization

The **P89LPC920/921/922** memory map is shown in Figure 1-1.

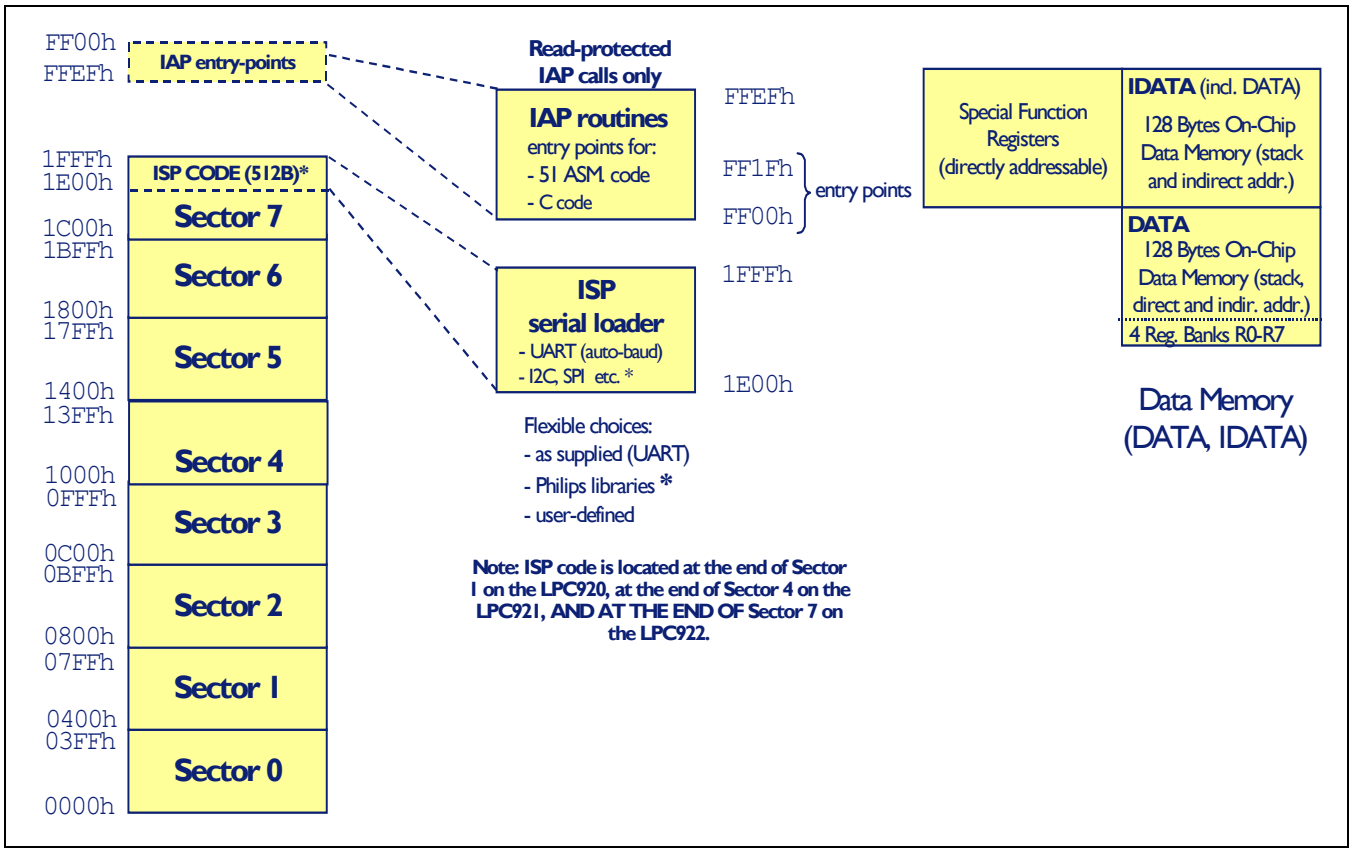

Figure 1-1: P89LPC920/921/922 memory map

The various **P89LPC920/921/922** memory spaces are as follows:

DATA 128 bytes of internal data memory space (00h..7Fh) accessed via direct or indirect addressing, using instructions other than MOVX and MOVC. All or part of the Stack may be in this area.

IDATA Indirect Data. 256 bytes of internal data memory space (00h:FFh) accessed via indirect addressing using instructions other than MOVX and MOVC. All or part of the Stack may be in this area. This area includes the DATA area and the 128 bytes immediately above it.

SFR Special Function Registers. Selected CPU registers and peripheral control and status registers, accessible only via direct addressing.

CODE 64 KB of Code memory space, accessed as part of program execution and via the MOVC instruction. The **P89LPC920/921/922** has 2 KB/ 4 KB/ 8 KB of on-chip Code memory.).

DATA RAM ARRANGEMENT

The 256 bytes of on-chip RAM is organized as follows:

Type	Data RAM	Size (Bytes)
DATA	Memory that can be addressed directly and indirectly	128
IDATA	Memory that can be addressed indirectly (includes DATA)	256

Table 1-1: On-chip data memory usage.

2. CLOCKS

Enhanced CPU

The **P89LPC920/921/922** uses an enhanced 80C51 CPU which runs at 6 times the speed of standard 80C51 devices. A machine cycle consists of two CPU clock cycles, and most instructions execute in one or two machine cycles.

Clocks

Clock definitions

The **P89LPC920/921/922** device has several internal clocks as defined below:

- OSCCLK - Input to the DIVM clock divider. OSCCLK is selected from one of four clock sources (see Figure 2-3) and can also be optionally divided to a slower frequency (see section "CPU Clock (CCLK) modification: DIVM register").

  Note: f_{OSC} is defined as the OSCCLK frequency.

- CCLK - CPU clock; output of the DIVM clock divider. There are two CCLK cycles per machine cycle, and most instructions are executed in one to two machine cycles (two or four CCLK cycles).
- RCCLK - The internal 7.373 MHz RC oscillator output.
- PCLK - Clock for the various peripheral devices and is CCLK/2.

Oscillator clock (OSCCLK)

The **P89LPC920/921/922** provides several user-selectable oscillator options. This allows optimization for a range of needs from high precision to lowest possible cost. These options are configured when the FLASH is programmed and include an on-chip watchdog oscillator, an on-chip RC oscillator, an oscillator using an external crystal, or an external clock source. The crystal oscillator can be optimized for low, medium, or high frequency crystals covering a range from 20 kHz to 12 MHz.

Low speed oscillator option

This option supports an external crystal in the range of 20 kHz to 100 kHz. Ceramic resonators are also supported in this configuration.

Medium speed oscillator option

This option supports an external crystal in the range of 100 kHz to 4 MHz. Ceramic resonators are also supported in this configuration.

High speed oscillator option

This option supports an external crystal in the range of 4 MHz to 12 MHz. Ceramic resonators are also supported in this configuration.

Clock output

The **P89LPC920/921/922** supports a user-selectable clock output function on the XTAL2 / CLKOUT pin when the crystal oscillator is not being used. This condition occurs if a different clock source has been selected (on-chip RC oscillator,watchdog oscillator, external clock input on X1) and if the Real-time Clock is not using the crystal oscillator as its clock source. This allows external devices to synchronize to the **P89LPC920/921/922**. This output is enabled by the ENCLK bit in the TRIM register

The frequency of this clock output is 1/2 that of the CCLK. If the clock output is not needed in Idle mode, it may be turned off prior to entering Idle, saving additional power. Note: on reset, the TRIM SFR is initialized with a factory preprogrammed value.

Therefore when setting or clearing the ENCLK bit, the user should retain the contents of bits 5:0 of the TRIM register. This can be done by reading the contents of the TRIM register (into the ACC for example), modifying bit 6, and writing this result back into the TRIM register. Alternatively,the "ANL direct" or "ORL direct" instructions can be used to clear or set bit 6 of the TRIM register.

The oscillator must be configured in one of the following modes:
- Low Frequency Crystal
- Medium Frequency Crystal
- High Frequency Crystal

* A series resistor may be required to limit crystal drive levels. This is especially important for low frequency crystals (see text).

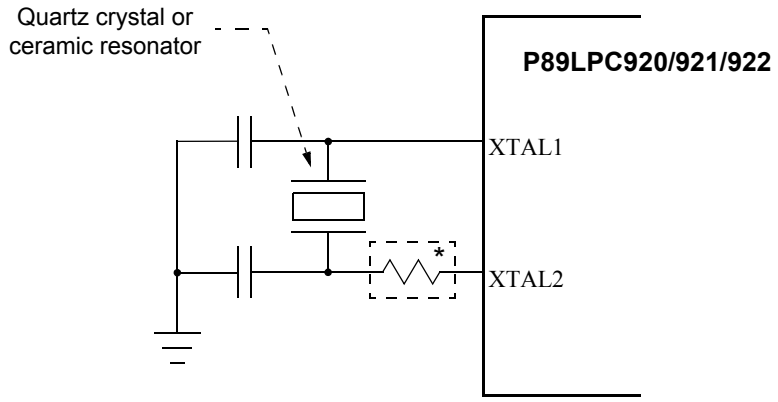

Figure 2-1: Using the crystal oscillator

On-chip RC oscillator option

The **P89LPC920/921/922** has a 6-bit TRIM register that can be used to tune the frequency of the RC oscillator. During reset, the TRIM value is initialized to a factory pre-programmed value to adjust the oscillator frequency to 7.373 MHz, ±1%. (Note: the initial value is better than 1%; please refer to the datasheet for behavior over temperature). End user applications can write to the TRIM register to adjust the on-chip RC oscillator to other frequencies. Increasing the TRIM value will decrease the oscillator frequency.

TRIM

Address: 96h

Not bit addressable

7	6	5	4	3	2	1	0
-	ENCLK	TRIM.5	TRIM.4	TRIM.3	TRIM.2	TRIM.1	TRIM.0

Reset Source(s): Power-up only

Reset Value: On power-up reset, ENCLK = 0, and TRIM.5-0 are loaded with the factory programmed value.

BIT	SYMBOL	FUNCTION
TRIM.7	-	Reserved.
TRIM.6	ENCLK	When ENCLK =1, CCLK/ 2 is output on the XTAL2 pin (P3.0) provided that the crystal oscillator is not being used. When ENCLK=0, no clock output is enabled.
TRIM.5-0		Trim value.

Note: on reset, the TRIM SFR is initialized with a factory preprogrammed value. When setting or clearing the ENCLK bit, the user should retain the contents of bits 5:0 of the TRIM register. This can be done by reading the contents of the TRIM register (into the ACC for example), modifying bit 6, and writing this result back into the TRIM register. Alternatively, the "ANL direct" or "ORL direct" instructions can be used to clear or set bit 6 of the TRIM register.

Figure 2-2: On-chip RC oscillator TRIM register

Watchdog oscillator option

The watchdog has a separate oscillator which has a frequency of 400 kHz. This oscillator can be used to save power when a high clock frequency is not needed.

External clock input option

In this configuration, the processor clock is derived from an external source driving the XTAL1 / P3.1 pin. The rate may be from 0 Hz up to 12 MHz. The XTAL2 / P3.0 pin may be used as a standard port pin or a clock output.

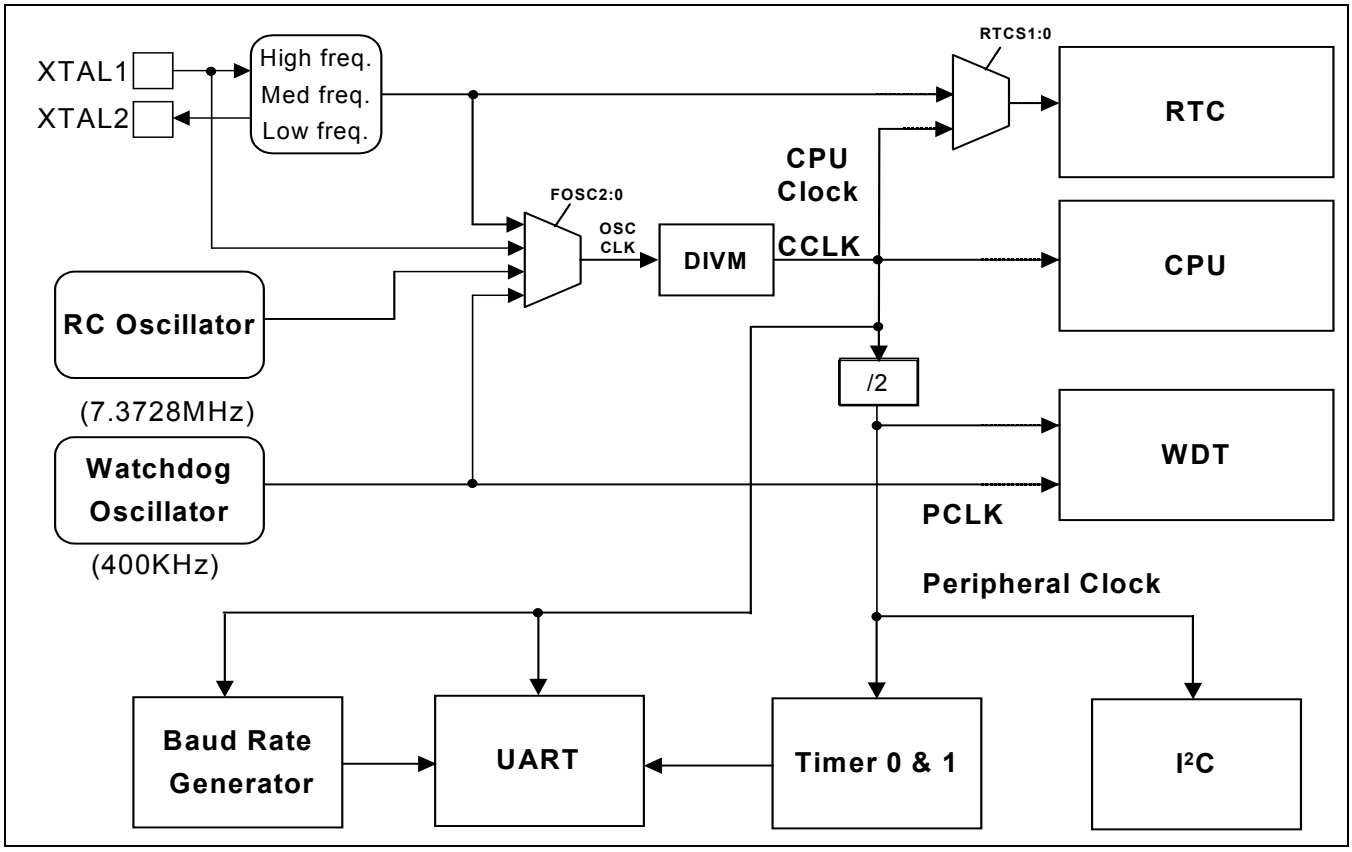

Figure 2-3: Block diagram of oscillator control

Oscillator Clock (OSCCLK) wakeup delay

The **P89LPC920/921/922** has an internal wakeup timer that delays the clock until it stabilizes depending to the clock source used. If the clock source is any of the three crystal selections, the delay is 992 OSCCLK cycles plus 60-100µs. If the clock source is either the internal RC oscillator or the Watchdog oscillator, the delay is 224 OSCCLK cycles plus 60-100µs.

CPU Clock (CCLK) modification: DIVM register

The OSCCLK frequency can be divided down, by an integer, up to 510 times by configuring a dividing register, DIVM, to provide CCLK. This produces the CCLK frequency using the following formula:

CCLK frequency = f_{OSC} / (2N)

Where: f_{OSC} is the frequency of OSCCLK

N is the value of DIVM.

Since N ranges from 0 to 255, the CCLK frequency can be in the range of f_{OSC} to f_{OSC}/510. (for N =0, CCLK = f_{OSC}) .

This feature makes it possible to temporarily run the CPU at a lower rate, reducing power consumption. By dividing the clock, the CPU can retain the ability to respond to events other than those that can cause interrupts (i.e. events that allow exiting the Idle mode) by executing its normal program at a lower rate. This can often result in lower power consumption than in Idle mode. This

can allow bypassing the oscillator start-up time in cases where Power down mode would otherwise be used. The value of DIVM may be changed by the program at any time without interrupting code execution.

Low power select

The **P89LPC920/921/922** is designed to run at 12 MHz (CCLK) maximum. However, if CCLK is 8 MHz or slower, the CLKLP SFR bit (AUXR1.7) can be set to a '1' to lower the power consumption further. On any reset, CLKLP is '0' allowing highest performance. This bit can then be set in software if CCLK is running at 8 MHz or slower.

3. INTERRUPTS

The **P89LPC920/921/922** uses a four priority level interrupt structure. This allows great flexibility in controlling the handling of the **P89LPC920/921/922**'s 12 interrupt sources.

Each interrupt source can be individually enabled or disabled by setting or clearing a bit in the interrupt enable registers IEN0 or IEN1. The IEN0 register also contains a global enable bit, EA, which enables all interrupts.

Each interrupt source can be individually programmed to one of four priority levels by setting or clearing bits in the interrupt priority registers IP0, IP0H, IP1, and IP1H. An interrupt service routine in progress can be interrupted by a higher priority interrupt, but not by another interrupt of the same or lower priority. The highest priority interrupt service cannot be interrupted by any other interrupt source. If two requests of different priority levels are received simultaneously, the request of higher priority level is serviced.

If requests of the same priority level are pending at the start of an instruction cycle, an internal polling sequence determines which request is serviced. This is called the arbitration ranking. Note that the arbitration ranking is only used for pending requests of the same priority level.

Table summarizes the interrupt sources, flag bits, vector addresses, enable bits, priority bits, arbitration ranking, and whether each interrupt may wake up the CPU from a Power down mode.

Interrupt priority structure

There are four SFRs associated with the four interrupt levels: IP0, IP0H, IP1, IP1H. Every interrupt has two bits in IPx and IPxH (x = 0,1) and can therefore be assigned to one of four levels, as shown in Table .

Table 3-1: Interrupt priority level

Priority bits		Interrupt priority level
IPxH	IPx	
0	0	Level 0 (lowest priority)
0	1	Level 1
1	0	Level 2
1	1	Level 3 (highest priority)

Table 3-2: Summary of interrupts

Description	Interrupt flag bit(s)	Vector address	Interrupt enable bit(s)	Interrupt priority	Arbitration ranking	Power down wakeup
External Interrupt 0	IE0	0003h	EX0 (IEN0.0)	IP0H.0, IP0.0	1 (highest)	Yes
Timer 0 Interrupt	TF0	000Bh	ET0 (IEN0.1)	IP0H.1, IP0.1	4	No
External Interrupt 1	IE1	0013h	EX1 (IEN0.2)	IP0H.2, IP0.2	6	Yes
Timer 1 Interrupt	TF1	001Bh	ET1 (IEN0.3)	IP0H.3, IP0.3	8	No
Serial Port Tx and Rx[1,3]	TI & RI	0023h	ES/ESR (IEN0.4)	IP0H.4, IP0.4	11	No
Serial Port Rx[1,3]	RI					
Brownout Detect	BOF	002Bh	EBO (IEN0.5)	IP0H.5, IP0.5	2	Yes
Watchdog Timer/Real-time Clock	WDOVF/ RTCF	0053h	EWDRT (IEN0.6)	IP0H.6, IP0.6	3	Yes
I^2C Interrupt	SI	0033h	EI2C (IEN1.0)	IP1H.0, IP1.0	5	No
KBI Interrupt	KBIF	003Bh	EKBI (IEN1.1)	IP1H.1, IP1.1	7	Yes
Comparators 1/2 interrupt	CMF1/CMF2	0043h	EC (IEN1.2)	IP1H.2, IP1.2	9	Yes
Serial Port Tx[2]	TI	006Bh	EST (IEN1.6)	P1H.6, IP1.6	10	No

1. SSTAT.5 = 0 selects combined Serial Port (UART) Tx and Rx interrupt; SSTAT.5 = 1 selects Serial Port Rx interrupt only (Tx interrupt will be different, see Note 3 below).
2. This interrupt is used as Serial Port (UART) Tx interrupt if and only if SSTAT.5 = 1, and is disabled otherwise.
3. If SSTAT.0 = 1, the following Serial Port additional flag bits can cause this interrupt: FE, BR, OE

The **P89LPC920/921/922** has two external interrupt inputs in addition to the Keypad Interrupt function. The two interrupt inputs are identical to those present on the standard 80C51 microcontrollers.

These external interrupts can be programmed to be level-triggered or edge-triggered by clearing or setting bit IT1 or IT0 in Register TCON. If ITn = 0, external interrupt n is triggered by a low level detected at the $\overline{INTn}$ pin. If ITn = 1, external interrupt n is edge triggered. In this mode if consecutive samples of the $\overline{INTn}$ pin show a high level in one cycle and a low level in the next cycle, interrupt request flag IEn in TCON is set, causing an interrupt request.

Since the external interrupt pins are sampled once each machine cycle, an input high or low level should be held for at least one machine cycle to ensure proper sampling. If the external interrupt is edge-triggered, the external source has to hold the request pin high for at least one machine cycle, and then hold it low for at least one machine cycle. This is to ensure that the transition is detected and that interrupt request flag IEn is set. IEn is automatically cleared by the CPU when the service routine is called.

If the external interrupt is level-triggered, the external source must hold the request active until the requested interrupt is generated. If the external interrupt is still asserted when the interrupt service routine is completed, another interrupt will be generated. It is not necessary to clear the interrupt flag IEn when the interrupt is level sensitive, it simply tracks the input pin level.

If an external interrupt is enabled when the **P89LPC920/921/922** is put into Power down or Idle mode, the interrupt occurance will cause the processor to wake up and resume operation. Refer to the section on Power Reduction Modes for details.

External Interrupt pin glitch suppression

Most of the **P89LPC920/921/922** pins have glitch suppression circuits to reject short glitches (please refer to the **P89LPC920/921/922** datasheet, AC Electrical Characteristics for glitch filter specifications) . However, pins SDA/INT0/P1.3 and SCL/T0/P1.2 do not have the glitch suppression circuits. Therefore, $\overline{INT1}$ has glitch suppression while $\overline{INT0}$ does not.

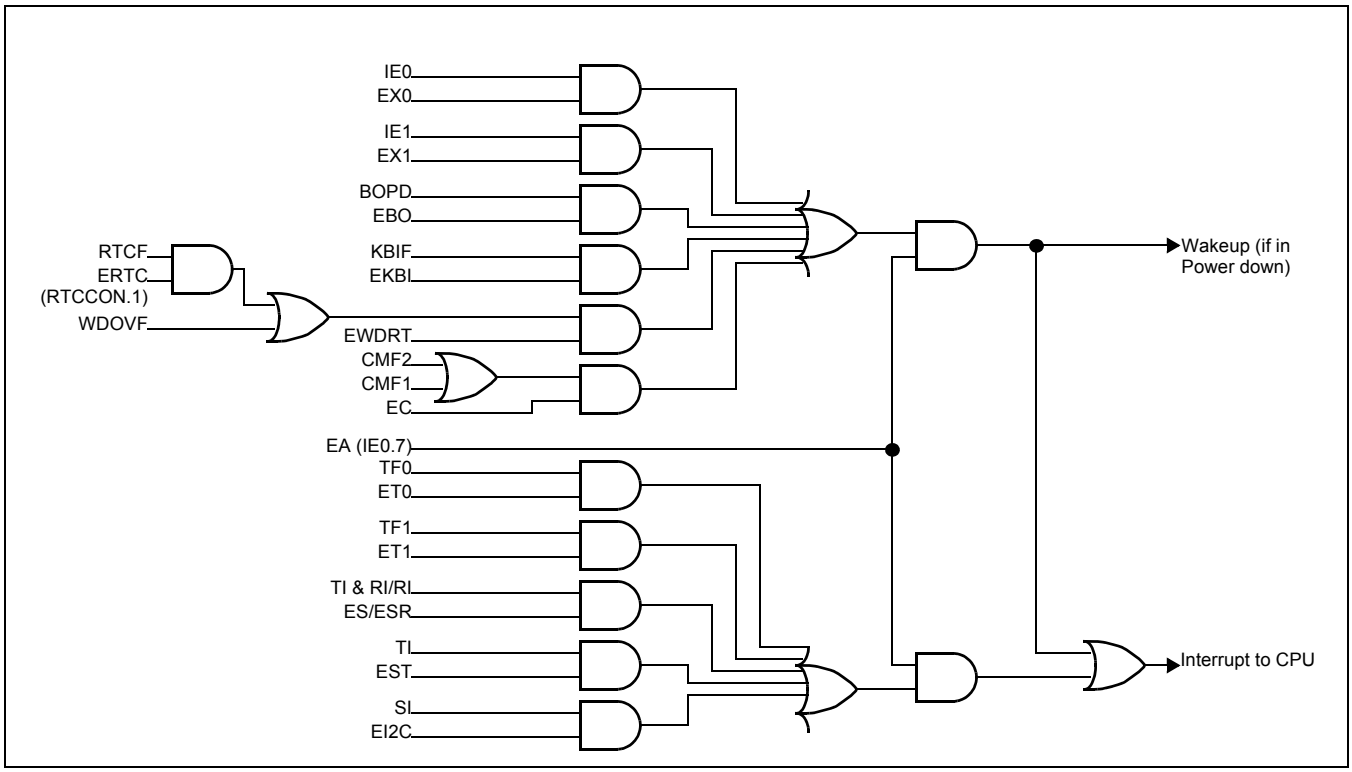

Figure 3-1: Interrupt sources, interrupt enables, and power down wake-up sources

4. I/O PORTS

The **P89LPC920/921/922** has 3 I/O ports: Port 0, Port 1, and Port 3. Ports 0 and 1 are 8-bit ports and Port 3 is a 2-bit port. The exact number of I/O pins available depends upon the clock and reset options chosen (see Table 4-1)

Table 4-1: .Number of I/O pins available

Clock source	Reset option	Number of I/O pins
On-chip oscillator or watchdog oscillator	No external reset (except during power-up)	18
	External $\overline{RST}$ pin supported	17
External clock input	No external reset (except during power-up)	17
	External $\overline{RST}$ pin supported	16
Low/medium/high speed oscillator (external crystal or resonator)	No external reset (except during power-up)	16
	External $\overline{RST}$ pin supported	15

Port configurations

All but three I/O port pins on the **P89LPC920/921/922** may be configured by software to one of four types on a pin-by-pin basis, as shown in Table 4-3. These are: quasi-bidirectional (standard 80C51 port outputs), push-pull, open drain, and input-only. Two configuration registers for each port select the output type for each port pin.

P1.5 ($\overline{RST}$) can only be an input and cannot be configured.

P1.2 (SCL/T0) and P1.3 (SDA/$\overline{INT0}$) may only be configured to be either input-only or open drain.

Table 4-2: Port output configuration settings

PxM1.y	PxM2.y	Port output mode
0	0	Quasi-bidirectional
0	1	Push-Pull
1	0	Input Only (High Impedance)
1	1	Open Drain

Quasi-bidirectional output configuration

Quasi-bidirectional outputs can be used both as an input and output without the need to reconfigure the port. This is possible because when the port outputs a logic high, it is weakly driven, allowing an external device to pull the pin low. When the pin is driven low, it is driven strongly and able to sink a large current. There are three pull-up transistors in the quasi-bidirectional output that serve different purposes.

One of these pull-ups, called the "very weak" pull-up, is turned on whenever the port latch for the pin contains a logic 1. This very weak pull-up sources a very small current that will pull the pin high if it is left floating.

A second pull-up, called the "weak" pull-up, is turned on when the port latch for the pin contains a logic 1 and the pin itself is also at a logic 1 level. This pull-up provides the primary source current for a quasi-bidirectional pin that is outputting a 1. If this pin is pulled low by an external device, the weak pull-up turns off, and only the very weak pull-up remains on. In order to pull the pin low under these conditions, the external device has to sink enough current to overpower the weak pull-up and pull the port pin below its input threshold voltage.

The third pull-up is referred to as the "strong" pull-up. This pull-up is used to speed up low-to-high transitions on a quasi-bidirectional port pin when the port latch changes from a logic 0 to a logic 1. When this occurs, the strong pull-up turns on for two CPU clocks quickly pulling the port pin high .

The quasi-bidirectional port configuration is shown in Figure 4-1.

Although the **P89LPC920/921/922** is a 3 V device most of the pins are 5 V-tolerant. If 5 V is applied to a pin configured in quasi-bidirectional mode, there will be a current flowing from the pin to V_{DD} causing extra power consumption. Therefore, applying 5 V to pins configured in quasi-bidirectional mode is discouraged.

A quasi-bidirectional port pin has a Schmitt-triggered input that also has a glitch suppression circuit.

(Please refer to the **P89LPC920/921/922** datasheet, AC Electrical Characteristics for glitch filter specifications)

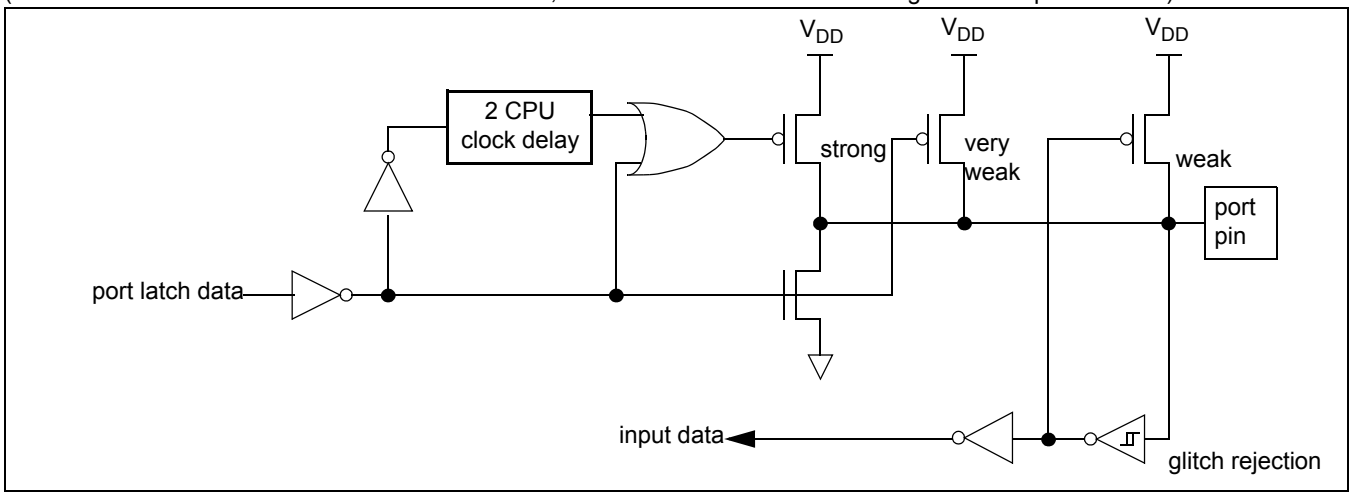

Figure 4-1: Quasi-bidirectional output

Open drain output configuration

The open drain output configuration turns off all pull-ups and only drives the pulldown transistor of the port pin when the port latch contains a logic 0. To be used as a logic output, a port configured in this manner must have an external pull-up, typically a resistor tied to V_{DD}. The pulldown for this mode is the same as for the quasi-bidirectional mode.

The open drain port configuration is shown in Figure 4-2.

An open drain port pin has a Schmitt-triggered input that also has a glitch suppression circuit.

Please refer to the **P89LPC920/921/922** datasheet, AC Electrical Characteristics for glitch filter specifications).

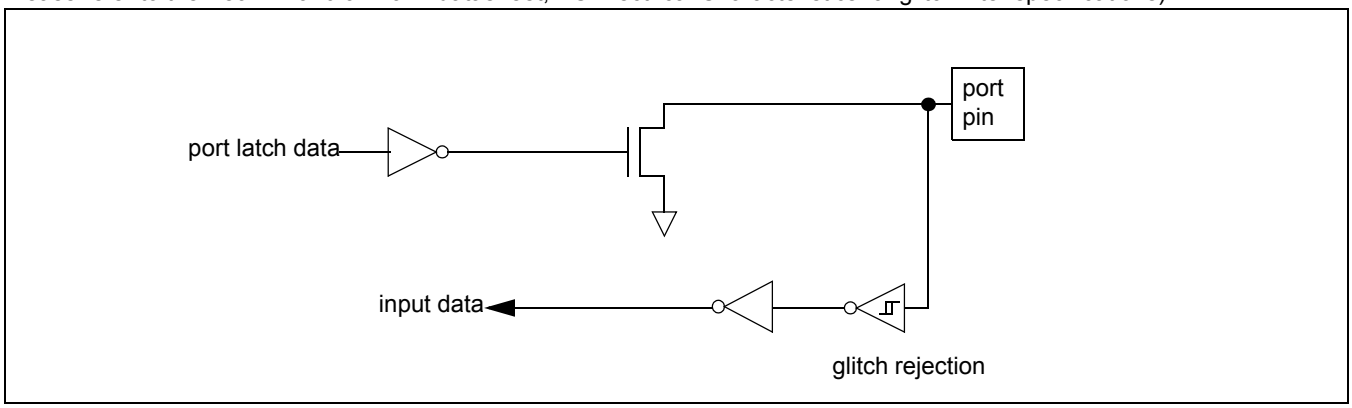

Figure 4-2: Open drain output

Input-only configuration

The input port configuration is shown in Figure 4-3. It is a Schmitt-triggered input that also has a glitch suppression circuit.

(Please refer to the **P89LPC920/921/922** datasheet, AC Electrical Characteristics for glitch filter specifications)

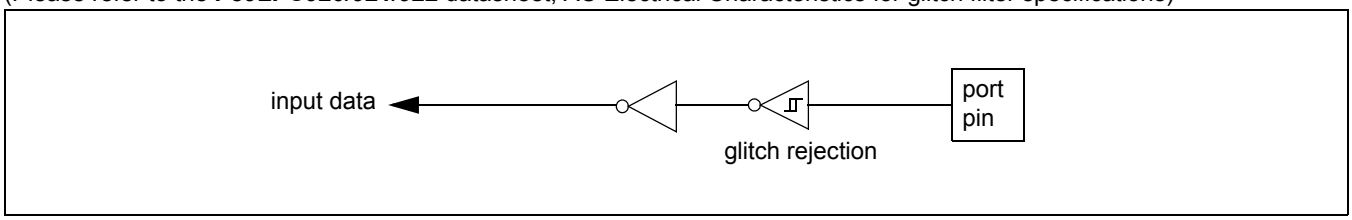

Figure 4-3: Input -only

Push-pull output configuration

The push-pull output configuration has the same pulldown structure as both the open drain and the quasi-bidirectional output modes, but provides a continuous strong pull-up when the port latch contains a logic 1. The push-pull mode may be used when more source current is needed from a port output.

The push-pull port configuration is shown in Figure 4-4.

A push-pull port pin has a Schmitt-triggered input that also has a glitch suppression circuit.

(Please refer to the **P89LPC920/921/922** datasheet, AC Electrical Characteristics for glitch filter specifications)

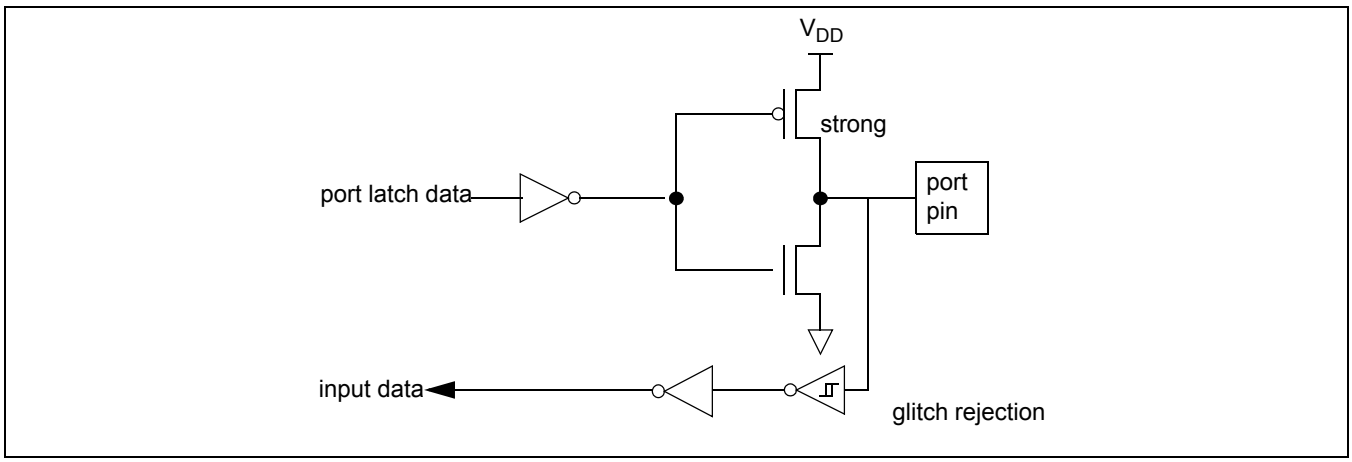

Figure 4-4: Push-pull output

Port 0 analog functions

The **P89LPC920/921/922** incorporates two Analog Comparators. In order to give the best analog performance and minimize power consumption, pins that are being used for analog functions must have both the digital outputs and digital inputs disabled.

Digital outputs are disabled by putting the port pins into the input-only mode as described in the Port Configurations section (see Table 4-3).

Digital inputs on Port 0 may be disabled through the use of the PT0AD register. Bits 1 through 5 in this register correspond to pins P0.1 through P0.5 of Port 0, respectively. Setting the corresponding bit in PT0AD disables that pin's digital input. Port bits that have their digital inputs disabled will be read as 0 by any instruction that accesses the port.

On any reset, PT0AD bits 1 through 5 default to '0's to enable the digital functions.

Table 4-3: Port output configuration

Port pin	Configuration SFR bits		Alternate usage	Notes
	PxM1.y	PxM2.y		
P0.0	P0M1.0	P0M2.0	KBI0,CMP2	
P0.1	P0M1.1	P0M2.1	KBI1,CIN2B	Refer to section "Port 0 analog functions" for usage as analog inputs (CIN2B, CIN2A, CIN1B, CIN1A and CMPREF)
P0.2	P0M1.2	P0M2.2	KBI2,CIN2A	
P0.3	P0M1.3	P0M2.3	KBI3,CIN1B	
P0.4	P0M1.4	P0M2.4	KBI4,CIN1A	
P0.5	P0M1.5	P0M2.5	KBI5,CMPREF	
P0.6	P0M1.6	P0M2.6	KBI6,CMP1	
P0.7	P0M1.7	P0M2.7	KBI7,T1	
P1.0	P1M1.0	P1M2.0	TxD	
P1.1	P1M1.1	P1M2.1	RxD	
P1.2	P1M1.2	P1M2.2	T0,SCL	input-only or open-drain
P1.3	P1M1.3	P1M2.3	$\overline{\text{INT0}}$,SDA	input-only or open-drain
P1.4	P1M1.4	P1M2.4	$\overline{\text{INT1}}$	
P1.5	not configurable		$\overline{\text{RST}}$	Input only. Usage as general purpose input or $\overline{\text{RST}}$ is determined by User Configuration Bit RPD (UCFG1.6). Always a reset input during a power-on sequence.
P1.6	P1M1.6	P1M2.6		
P1.7	P1M1.7	P1M2.7		
P3.0	P3M1.0	P3M2.0	XTAL2,CLKOUT	
P3.1	P3M1.1	P3M2.1	XTAL1	

Additional port features

After power-up, all pins are in Input-Only mode. **Please note that this is different from the LPC76x series of devices.**

- After power-up, all I/O pins except P1.5, may be configured by software.
- Pin P1.5 is input only. Pins P1.2 and P1.3 are configurable for either input-only or open drain.

Every output on the **P89LPC920/921/922** has been designed to sink typical LED drive current. However, there is a maximum total output current for all ports which must not be exceeded. Please refer to the **P89LPC920/921/922** Datasheet for detailed specifications.

All ports pins that can function as an output have slew rate controlled outputs to limit noise generated by quickly switching output signals. The slew rate is factory-set to approximately 10 ns rise and fall times.

5. POWER MONITORING FUNCTIONS

The **P89LPC920/921/922** incorporates power monitoring functions designed to prevent incorrect operation during initial power-on and power loss or reduction during operation. This is accomplished with two hardware functions: Power-on Detect and Brownout Detect.

Brownout Detection

The Brownout Detect function determines if the power supply voltage drops below a certain level. The default operation for a Brownout Detection is to cause a processor reset. However, it may alternatively be configured to generate an interrupt by setting the BOI (PCON.4) bit and the EBO (IEN0.5) bit.

Enabling and disabling of Brownout Detection is done via the BOPD (PCON.5) bit, bit field PMOD1-0 (PCON.1-0) and user configuration bit BOE (UCFG1.5). If BOE is in an unprogrammed state, brownout is disabled regardless of PMOD1-0 and BOPD. If BOE is in a programmed state, PMOD1-0 and BOPD will be used to determine whether Brownout Detect will be disabled or enabled. PMOD1-0 is used to select the power reduction mode. If PMOD1-0 = '11', the circuitry for the Brownout Detection is disabled for lowest power consumption. BOPD defaults to '0', indicating brownout detection is enabled on power-on if BOE is programmed.

If Brownout Detection is enabled, the operating voltage range for V_{DD} is 2.7 V-3.6 V, and the brownout condition occurs when V_{DD} falls below the Brownout trip voltage, V_{BO} (see D.C. Electrical Characteristics), and is negated when V_{DD} rises above V_{BO}. If Brownout Detection is disabled, the operating voltage range for V_{DD} is 2.4 V-3.6 V. If the **P89LPC920/921/922** device is to operate with a power supply that can be below 2.7 V, BOE should be left in the unprogrammed state so that the device can operate at 2.4 V, otherwise continuous brownout reset may prevent the device from operating.

If Brownout Detect is enabled (BOE programmed, PMOD1-0 $\neq$ '11', BOPD = 0), BOF (RSTSRC.5) will be set when a brownout is detected, regardless of whether a reset or an interrupt is enabled, . BOF will stay set until it is cleared in software by writing '0' to the bit. Note that if BOE is unprogrammed, BOF is meaningless. If BOE is programmed, and a initial power-on occurs, BOF will be set in addition to the power-on flag (POF - RSTSRC.4).

For correct activation of Brownout Detect, certain V_{DD} rise and fall times must be observed. Please see the datasheet for specifications.

Table 5-1: Brownout options

BOE (UCFG1.5)	PMOD1-0 (PCON.1-0)	BOPD (PCON.5)	BOI (PCON.4)	EBO (IEN0.5)	EA (IEN0.7)	Description
0 (erased)	XX	X	X	X	X	Brownout disabled. V_{DD} operating range is 2.4 V-3.6 V.
1 (programmed)	11 (total power down)	X	X	X	X	
	≠ 11 (any mode other than total power down)	1 (brownout detect powered down)	X	X	X	Brownout disabled. V_{DD} operating range is 2.4 V-3.6 V. However, BOPD is default to '0' upon power-up.
		0 (brownout detect active)	0 (brownout detect generates reset)	X	X	Brownout reset enabled. V_{DD} operating range is 2.7 V-3.6 V. Upon a brownout reset, BOF (RSTSRC.5) will be set to indicate the reset source. BOF can be cleared by writing '0' to the bit.
			1 (brownout detect generates an interrupt)	1 (enable brownout interrupt)	1 (global interrupt enable)	Brownout interrupt enabled. V_{DD} operating range is 2.7 V-3.6 V. Upon a brownout interrupt, BOF (RSTSRC.5) will be set. BOF can be cleared by writing '0' to the bit.
				0	X	Both brownout reset and interrupt disabled. V_{DD} operating range is 2.4 V-3.6 V. However, BOF (RSTSRC.5) will be set when V_{DD} falls to the Brownout Detection trip point. BOF can be cleared by writing '0' to the bit.
				X	0	

Power-on Detection

The Power-On Detect has a function similar to the Brownout Detect, but is designed to work as power initially comes up, before the power supply voltage reaches a level where the Brownout Detect can function. The POF flag (RSTSRC.4) is set to indicate an initial power-on condition. The POF flag will remain set until cleared by software by writing '0' to the bit. Note that if BOE (UCFG1.5) is programmed, BOF (RSTSRC.5) will be set when POF is set. If BOE is unprogrammed, BOF is meaningless.

Power reduction modes

The **P89LPC920/921/922** supports three different power reduction modes as determined by SFR bits PCON.1-0 (see Table 5-2):

PMOD1 (PCON.1)	PMOD0 (PCON.0)	Description
0	0	Normal mode (default) - no power reduction.
0	1	Idle mode. The Idle mode leaves peripherals running in order to allow them to activate the processor when an interrupt is generated. Any enabled interrupt source or reset may terminate Idle mode.
1	0	Power down mode: The Power down mode stops the oscillator in order to minimize power consumption. The **P89LPC920/921/922** exits Power down mode via any reset, or certain interrupts - external pins $\overline{INT0}$/$\overline{INT1}$, brownout Interrupt, keyboard, Real-time Clock/System Timer), watchdog, and comparator trips. Waking up by reset is only enabled if the corresponding reset is enabled, and waking up by interrupt is only enabled if the corresponding interrupt is enabled and the EA SFR bit (IEN0.7) is set. In Power down mode the internal RC oscillator is disabled unless both the RC oscillator has been selected as the system clock AND the RTC is enabled. In Power down mode, the power supply voltage may be reduced to the RAM keep-alive voltage V_{RAM}. This retains the RAM contents at the point where Power down mode was entered. SFR contents are not guaranteed after V_{DD} has been lowered to V_{RAM}, therefore it is recommended to wake up the processor via Reset in this situation. V_{DD} must be raised to within the operating range before the Power down mode is exited. When the processor wakes up from Power down mode, it will start the oscillator immediately and begin execution when the oscillator is stable. Oscillator stability is determined by counting 1024 CPU clocks after start-up when one of the crystal oscillator configurations is used, or 256 clocks after start-up for the internal RC or external clock input configurations. Some chip functions continue to operate and draw power during Power down mode, increasing the total power used during Power down. These include: • Brownout Detect • Watchdog Timer if WDCLK (WDCON.0) is '1'. • Comparators (Note: Comparators can be powered down separately with PCONA.5 set to '1' and comparators disabled); • Real-time Clock/System Timer (and the crystal oscillator circuitry if this block is using it, unless RTCPD, i.e., PCONA.7 is '1').
1	1	Total power down mode: This is the same as Power down mode except that the Brownout Detection circuitry and the voltage comparators are also disabled to conserve additional power. Note that a brownout reset or interrupt will not occur. Voltage comparator interrupts and Brownout interrupt cannot be used as a wakeup source.The internal RC oscillator is disabled unless both the RC oscillator has been selected as the system clock AND the RTC is enabled. The following are the wakeup options supported: • Watchdog Timer if WDCLK (WDCON.0) is '1'. Could generate Interrupt or Reset, either one can wake up the device • External interrupts INTO/INT1 • Keyboard Interrupt • Real-time Clock/System Timer (and the crystal oscillator circuitry if this block is using it, unless RTCPD, i.e., PCONA.7 is '1'). • Note: Using the internal RC-oscillator to clock the RTC during Power down may result in relatively high power consumption. Lower power consumption can be achieved by using an external low frequency clock when the Real-time Clock is running during Power down.

Table 5-2: Power reduction modes.

PCON

Address: 87h

Not bit addressable

Reset Source(s): Any reset

Reset Value: 00000000B

7	6	5	4	3	2	1	0
SMOD1	SMOD0	BOPD	BOI	GF1	GF0	PMOD1	PMOD0

BIT	SYMBOL	FUNCTION
PCON.7	SMOD1	Double Baud Rate bit for the serial port (UART) when Timer 1 is used as the baud rate source. When 1, the Timer 1 overflow rate is supplied to the UART. When 0, the Timer 1 overflow rate is divided by two before being supplied to the UART. (See Figure 9-2)
PCON.6	SMOD0	Framing Error Location: -When 0, bit 7 of SCON is accessed as SM0 for the UART. -When 1, bit 7 of SCON is accessed as the framing error status (FE) for the UART. This bit also determines the location of the UART receiver interrupt RI (see description on RI in Figure 9-3).
PCON.5	BOPD	Brownout Detect Power down. When 1, Brownout Detect is powered down and therefore disabled. When 0, Brownout Detect is enabled. (Note: BOPD must be '0' before any programming or erasing commands can be issued. Otherwise these commands will be aborted.)
PCON.4	BOI	Brownout Detect Interrupt Enable. When 1, Brownout Detection will generate a interrupt . When 0, Brownout Detection will cause a reset.
PCON.3	GF1	General Purpose Flag 1. May be read or written by user software, but has no effect on operation.
PCON.2	GF0	General Purpose Flag 0. May be read or written by user software, but has no effect on operation.
PCON.1-0	PMOD1-PMOD0	Power Reduction Mode (see section "Power reduction modes").

Figure 5-1: Power Control register (PCON)

PCONA

Address: B5H

Not bit addressable

Reset Source(s): Any reset

Reset Value: 00000000B

7	6	5	4	3	2	1	0
RTCPD	-	VCPD	-	I2PD	-	SPD	-

BIT	SYMBOL	FUNCTION
PCONA.7	RTCPD	Real-time Clock Power down: When '1', the internal clock to the Real-time Clock is disabled.
PCONA.6	-	Not used. Reserved for future use.
PCONA.5	VCPD	Analog Voltage Comparators Power down: When '1', the voltage comparators are powered down. User must disable the voltage comparators prior to setting this bit.
PCONA.4	-	Not used. Reserved for future use.
PCONA.3	I2PD	I^2C Power down: When '1', the internal clock to the I^2C is disabled. Note that in either Power down mode or Total Power down mode, the I^2C clock will be disabled regardless of this bit.
PCONA.2	-	Not used. Reserved for future use.
PCONA.1	SPD	Serial Port (UART) Power down: When '1', the internal clock to the UART is disabled. Note that in either Power down mode or Total Power down mode, the UART clock will be disabled regardless of this bit.
PCONA.0	-	Not used. Reserved for future use.
		NOTE: Brownout Detect Power down is located in PCON.5.

Figure 5-2: Power Control register A (PCONA)

POWER MONITORING FUNCTIONS

6. RESET

The P1.5/$\overline{RST}$ pin can function as either an active low reset input or as a digital input, P1.5. The RPE (Reset Pin Enable) bit in UCFG1, when set to 1, enables the external reset input function on P1.5. When cleared, P1.5 may be used as an input pin.

NOTE: During a power-on sequence, The RPE selection is overriden and this pin will always functions as a reset input. An external circuit connected to this pin should not hold this pin low during a Power-on sequence as this will keep the device in reset. After power-on this input will function either as an external reset input or as a digital input as defined by the RPE bit. Only a power-on reset will temporarily override the selection defined by RPE bit. Other sources of reset will not override the RPE bit.

NOTE: During a power cycle, V_{DD} must fall below V_{POR} (see "DC electrical characteristics" in the datasheet) before pwoer is reapplied, in order to ensure a power-on reset.

Reset can be triggered from the following sources (see Figure 6-1):

- External reset pin (during power-on or if user configured via UCFG1);
- Power-on Detect;
- Brownout Detect;
- Watchdog Timer;
- Software reset;
- UART break detect reset.

For every reset source, there is a flag in the Reset Register, RSTSRC. The user can read this register to determine the most recent reset source. These flag bits can be cleared in software by writing a '0' to the corresponding bit. More than one flag bit may be set:

- During a power-on reset, both POF and BOF are set but the other flag bits are cleared.
- For any other reset, any previously set flag bits that have not been cleared will remain set.

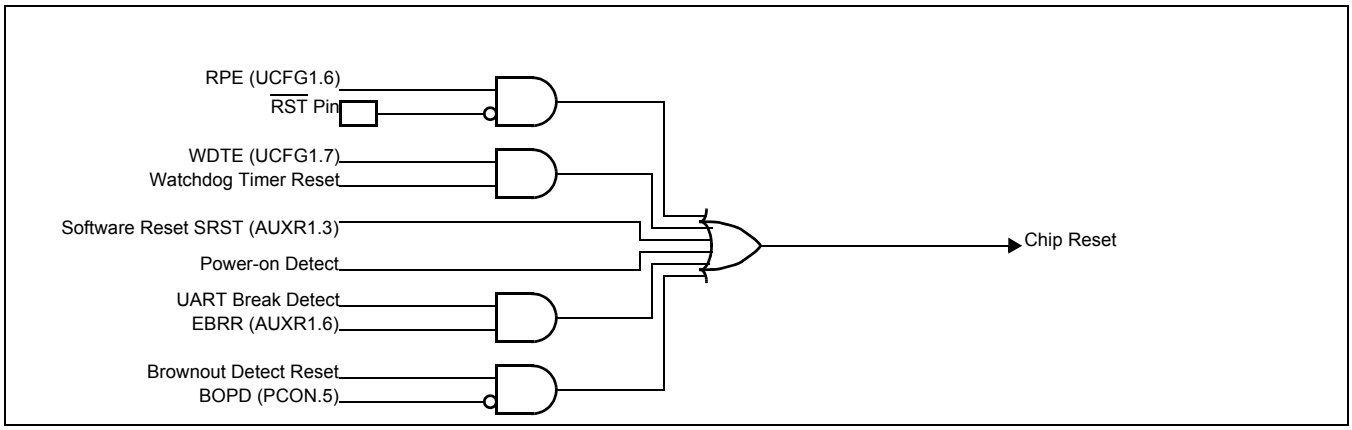

Figure 6-1: Block diagram of Reset

RSTSRC

Address: DFH

Not bit addressable

7	6	5	4	3	2	1	0
-	-	BOF	POF	R_BK	R_WD	R_SF	R_EX

Reset Sources: Power-on only

Reset Value: xx110000B (This is the power-on reset value. Other reset sources will set corresponding bits.)

BIT	SYMBOL	FUNCTION
RSTSRC.7-6	-	Reserved for future use. Should not be set to 1 by user programs.
RSTSRC.5	BOF	Brownout Detect Flag. When Brownout Detect is activated, this bit is set. It will remain set until cleared by software by writing a '0' to the bit. (Note: On a Power-on reset, both POF and this bit will be set while the other flag bits are cleared.)
RSTSRC.4	POF	Power-on Detect Flag. When Power-on Detect is activated, the POF flag is set to indic ate an initial power-up condition. The POF flag will remain set until cleared by software by writing a '0' to the bit.. (Note: On a Power-on reset, both BOF and this bit will be set while the other flag bits are cleared.)
RSTSRC.3	R_BK	Break detect reset. If a break detect occurs and EBRR (AUXR1.6) is set to '1', a system reset will occur. This bit is set to indicate that the system reset is caused by a break detect. Cleared by software by writing a '0' to the bit or on a Power-on reset.
RSTSRC.2	R_WD	Watchdog Timer reset flag. Cleared by software by writing a '0' to the bit or a Power-on reset.(NOTE: UCFG1.7 must be = 1).
RSTSRC.1	R_SF	Software reset Flag. Cleared by software by writing a '0' to the bit or a Power-on reset.
RSTSRC.0	R_EX	External reset Flag. When this bit is '1', it indicates external pin reset. Cleared by software by writing a '0' to the bit or a Power-on reset. If $\overline{RST}$ is still asserted after the Power-on reset is over, R_EX will be set.

Figure 6-2: Reset Sources register

Reset vector

Following reset, the P89LPC920//921/922 will fetch instructions from either address 0000h or the Boot address. The Boot address is formed by using the Boot Vector as the high byte of the address and the low byte of the address =00h. The Boot address will be used if a UART break reset occurs or the non-volatile Boot Status bit (BOOTSTAT.0) = 1, or the device has been forced into ISP mode.Otherwise, instructions will be fetched from address 0000H.

7. TIMERS 0 AND 1

The **P89LPC920/921/922** has two general-purpose counter/timers which are upward compatible with the 80C51 Timer 0 and Timer 1. Both can be configured to operate either as timers or event counters (see Figure 7-1). An option to automatically toggle the Tx pin upon timer overflow has been added.

In the "Timer" function, the timer is incremented every PCLK.

In the "Counter" function, the register is incremented in response to a 1-to-0 transition on its corresponding external input pin (T0 or T1). The external input is sampled once during every machine cycle. When the pin is high during one cycle and low in the next cycle, the count is incremented. The new count value appears in the register during the cycle following the one in which the transition was detected. Since it takes 2 machine cycles (4 CPU clocks) to recognize a 1-to-0 transition, the maximum count rate is 1/4 of the CPU clock frequency. There are no restrictions on the duty cycle of the external input signal, but to ensure that a given level is sampled at least once before it changes, it should be held for at least one full machine cycle.

The "Timer" or "Counter" function is selected by control bits TnC/$\overline{T}$ (x = 0 and 1 for Timers 0 and 1 respectively) in the Special Function Register TMOD. Timer 0 and Timer 1 have five operating modes (modes 0, 1, 2, 3 and 6), which are selected by bit-pairs (TnM1, TnM0) in TMOD and TnM2 in TAMOD. Modes 0, 1, 2 and 6 are the same for both Timers/Counters. Mode 3 is different. The operating modes are described later in this section.

TMOD

Address: 89h

Not bit addressable

Reset Source(s): Any source

Reset Value: 00000000B

7	6	5	4	3	2	1	0
T1GATE	T1C/$\overline{T}$	T1M1	T1M0	T0GATE	T0C/$\overline{T}$	T0M1	T0M0

BIT	SYMBOL	FUNCTION
TMOD.7	T1GATE	Gating control for Timer 1. When set, Timer/Counter is enabled only while the $\overline{INT1}$ pin is high and the TR1 control pin is set. When cleared, Timer 1 is enabled when the TR1 control bit is set.
TMOD.6	T1C/$\overline{T}$	Timer or Counter Selector for Timer 1. Cleared for Timer operation (input from CCLK). Set for Counter operation (input from T1 input pin).
TMOD.5, 4	T1M1,T1M0	Mode Select for Timer 1.These bits are used with the T1M2 bit in the TAMOD register to determine the Timer 1 mode (see Figure 7-2).
TMOD.3	T0GATE	Gating control for Timer 0. When set, Timer/Counter is enabled only while the $\overline{INT0}$ pin is high and the TR0 control pin is set. When cleared, Timer 0 is enabled when the TR0 control bit is set.
TMOD.2	T0C/$\overline{T}$	Timer or Counter Selector for Timer 0. Cleared for Timer operation (input from CCLK). Set for Counter operation (input from T0 input pin).
TMOD.1, 0	T0M1,T0M0	Mode Select for Timer 0. These bits are used with the T0M2 bit in the TAMOD register to determine the Timer 0 mode (see Figure 7-2).

Figure 7-1: Timer/Counter Mode Control register (TMOD)

TAMOD

Address: 8Fh

7	6	5	4	3	2	1	0
-	-	-	T1M2	-	-	-	T0M2

Not bit addressable

Reset Source(s): Any reset

Reset Value: xxx0xxx0B

BIT	SYMBOL	FUNCTION
TAMOD.7-5	-	Reserved for future use. Should not be set to 1 by user programs.
TAMOD.4	T1M2	Mode Select bit 2 for Timer 1. It is used with T1M1 and T1M0 in the TMOD register to determine Timer 1 mode.
TAMOD.3-1	-	Reserved for future use. Should not be set to 1 by user programs.
TAMOD.0	T0M2	Mode Select bit 2 for Timer 0. It is used with T0M1 and T0M0 in the TMOD register to determine Timer 0 mode.
	TnM2-TnM0	Timer Mode
	0 0 0	8048 Timer "TLn" serves as 5-bit prescaler. (Mode 0)
	0 0 1	16-bit Timer/Counter "THn" and "TLn" are cascaded; there is no prescaler.(Mode 1)
	0 1 0	8-bit auto-reload Timer/Counter. THn holds a value which is loaded into TLn when it overflows. (Mode 2)
	0 1 1	Timer 0 is a dual 8-bit Timer/Counter in this mode. TL0 is an 8-bit Timer/Counter controlled by the standard Timer 0 control bits. TH0 is an 8-bit timer only, controlled by the Timer 1 control bits (see text). Timer 1 in this mode is stopped. (Mode 3)
	1 0 0	Reserved. User must not configure to this mode.
	1 0 1	Reserved. User must not configure to this mode.
	1 1 0	PWM mode (see section "Mode 6").
	1 1 1	Reserved. User must not configure to this mode.

Figure 7-2: Timer/Counter Auxiliary Mode Control register (TAMOD)

Mode 0

Putting either Timer into Mode 0 makes it look like an 8048 Timer, which is an 8-bit Counter with a divide-by-32 prescaler. Figure 7-4 shows Mode 0 operation.

In this mode, the Timer register is configured as a 13-bit register. As the count rolls over from all 1s to all 0s, it sets the Timer interrupt flag TFn. The count input is enabled to the Timer when TRn = 1 and either TnGATE = 0 or $\overline{INTn}$ = 1. (Setting TnGATE = 1 allows the Timer to be controlled by external input $\overline{INTn}$, to facilitate pulse width measurements). TRn is a control bit in the Special Function Register TCON (Figure 7-3). The TnGATE bit is in the TMOD register.

The 13-bit register consists of all 8 bits of THn and the lower 5 bits of TLn. The upper 3 bits of TLn are indeterminate and should be ignored. Setting the run flag (TRn) does not clear the registers.

Mode 0 operation is the same for Timer 0 and Timer 1. See Figure 7-4. There are two different GATE bits, one for Timer 1 (TMOD.7) and one for Timer 0 (TMOD.3).

Mode 1

Mode 1 is the same as Mode 0, except that all 16 bits of the timer register (THn and TLn) are used. See Figure 7-5.

Mode 2

Mode 2 configures the Timer register as an 8-bit Counter (TLn) with automatic reload, as shown in Figure 7-6. Overflow from TLn not only sets TFn, but also reloads TLn with the contents of THn, which must be preset by software. The reload leaves THn unchanged. Mode 2 operation is the same for Timer 0 and Timer 1.

Mode 3

When Timer 1 is in Mode 3 it is stopped. The effect is the same as setting TR1 = 0.

Timer 0 in Mode 3 establishes TL0 and TH0 as two separate 8-bit counters. The logic for Mode 3 on Timer 0 is shown in Figure 7-7. TL0 uses the Timer 0 control bits: T0C/$\overline{T}$, T0GATE, TR0, $\overline{INT0}$, and TF0. TH0 is locked into a timer function (counting machine cycles) and takes over the use of TR1 and TF1 from Timer 1. Thus, TH0 now controls the "Timer 1" interrupt.

Mode 3 is provided for applications that require an extra 8-bit timer. With Timer 0 in Mode 3, an **P89LPC920/921/922** device can look like it has three Timer/Counters.

Note: When Timer 0 is in Mode 3, Timer 1 can be turned on and off by switching it into and out of its own Mode 3. It can still be used by the serial port as a baud rate generator, or in any application not requiring an interrupt.

Mode 6

In this mode, the corresponding timer can be changed to a PWM with a full period of 256 timer clocks (see Figure 7-8). Its structure is similar to mode 2, except that:

- TFn (n = 0 and 1 for Timers 0 and 1 respectively) is set and cleared in hardware;
- The low period of the TFn is in THn, and should be between 1 and 254, and;
- The high period of the TFn is always 256-THn.
- Loading THn with 00h will force the Tx pin high, loading THn with FFh will force the Tx pin low.

Note that interrupt can still be enabled on the low to high transition of TFn, and that TFn can still be cleared in software like in any other modes.

TCON

Address: 88h

Bit addressable

Reset Source(s): Any reset

Reset Value: 00000000B

7	6	5	4	3	2	1	0
TF1	TR1	TF0	TR0	IE1	IT1	IE0	IT0

BIT	SYMBOL	FUNCTION
TCON.7	TF1	Timer 1 overflow flag. Set by hardware on Timer/Counter overflow. Cleared by hardware when the interrupt is processed, or by software (except in mode 6, see above, when it is cleared in hardware).
TCON.6	TR1	Timer 1 Run control bit. Set/cleared by software to turn Timer/Counter 1 on/off.
TCON.5	TF0	Timer 0 overflow flag. Set by hardware on Timer/Counter overflow. Cleared by hardware when the processor vectors to the interrupt routine, or by software. (except in mode 6, see above, when it is cleared in hardware)
TCON.4	TR0	Timer 0 Run control bit. Set/cleared by software to turn Timer/Counter 0 on/off.
TCON.3	IE1	Interrupt 1 Edge flag. Set by hardware when external interrupt 1 edge is detected. Cleared by hardware when the interrupt is processed, or by software.
TCON.2	IT1	Interrupt 1 Type control bit. Set/cleared by software to specify falling edge/low level triggered external interrupts.
TCON.1	IE0	Interrupt 0 Edge flag. Set by hardware when external interrupt 0 edge is detected. Cleared by hardware when the interrupt is processed, or by software.
TCON.0	IT0	Interrupt 0 Type control bit. Set/cleared by software to specify falling edge/low level triggered external interrupts.

Figure 7-3: Timer/Counter Control register (TCON)

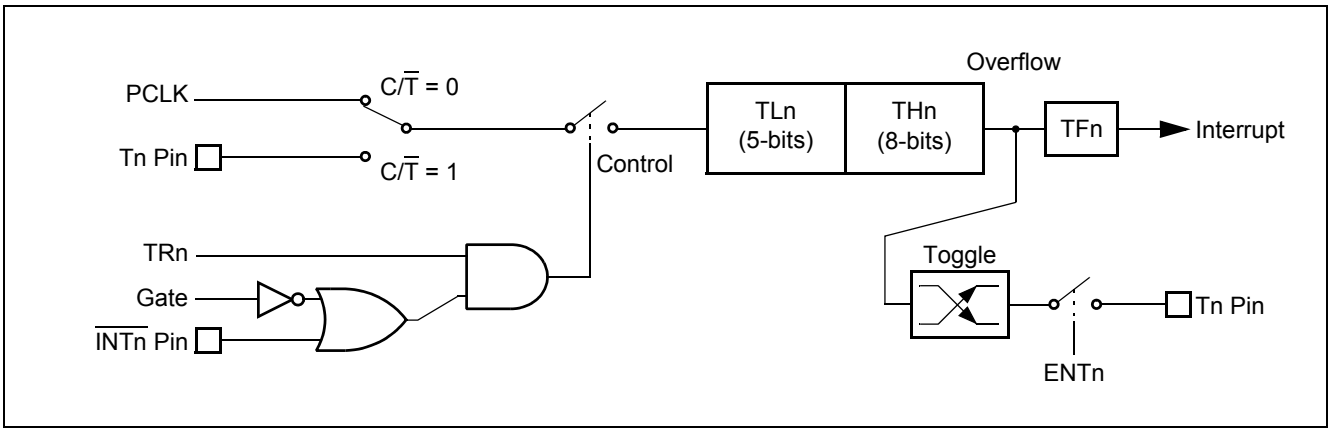

Figure 7-4: Timer/Counter 0 or 1 in Mode 0 (13-bit counter)

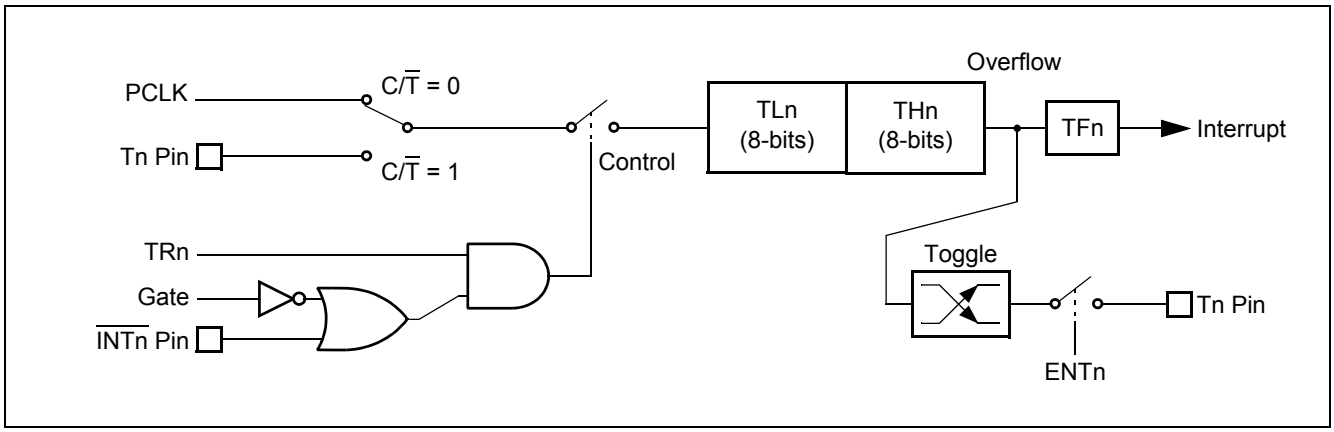

Figure 7-5: Timer/Counter 0 or 1 in Mode 1 (16-bit counter)

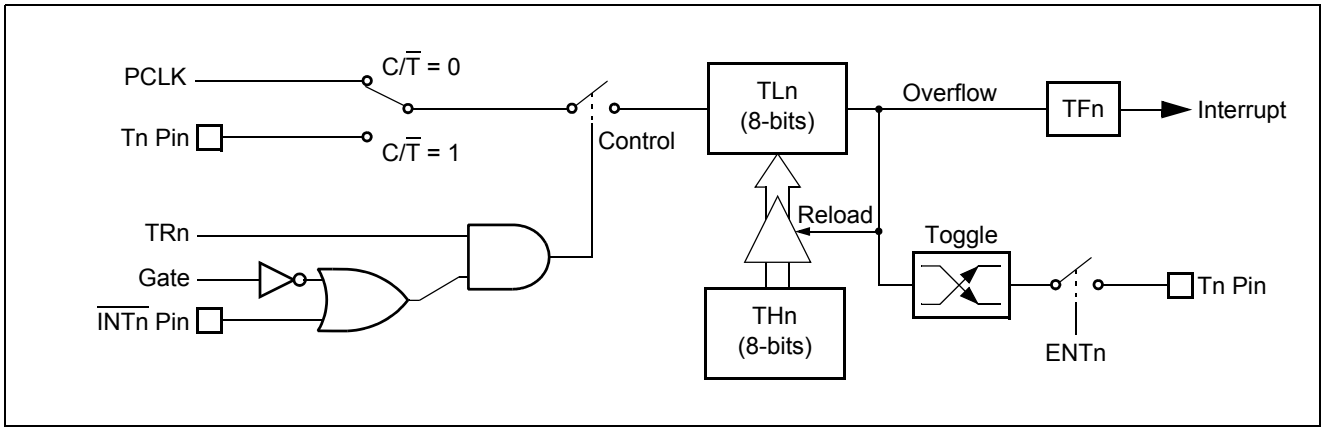

Figure 7-6: Timer/Counter 0 or 1 in Mode 2 (8-bit auto-reload)

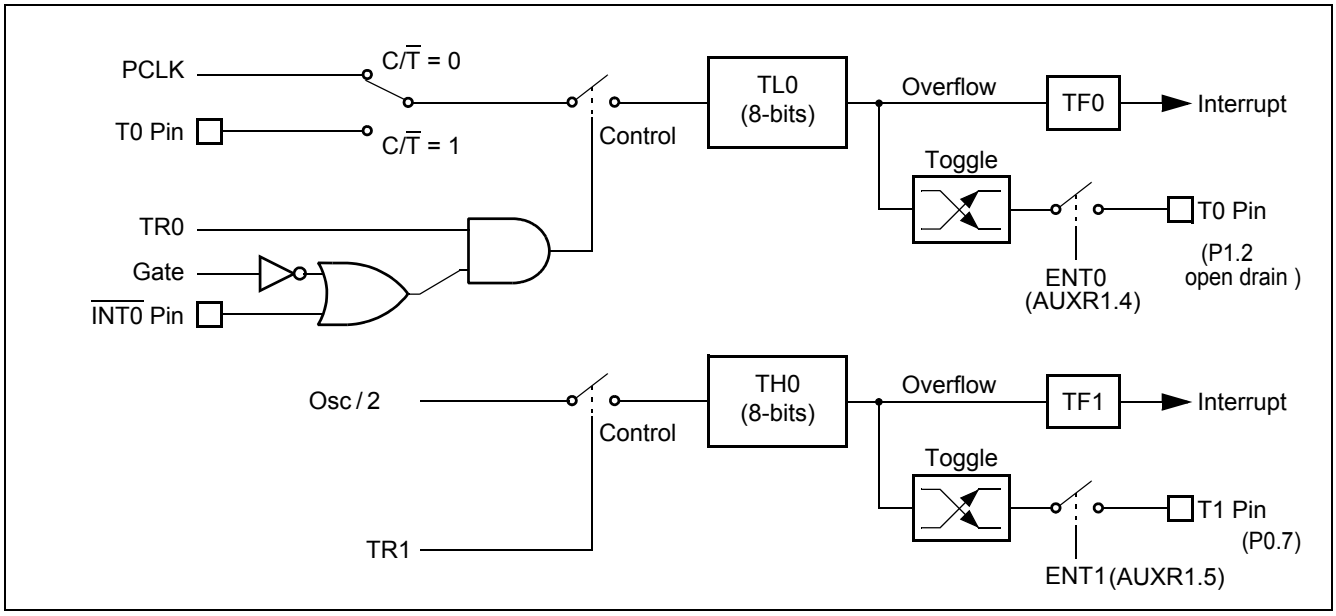

Figure 7-7: Timer/Counter 0 Mode 3 (two 8-bit counters)

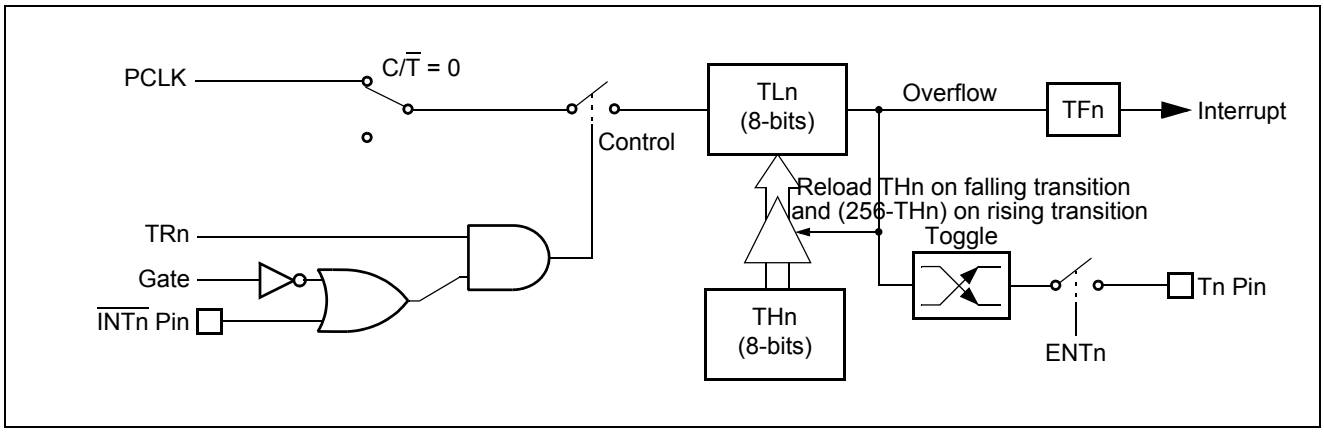

Figure 7-8: Timer/Counter 0 or 1 in Mode 6 (PWM auto-reload)

Timer overflow toggle output

Timers 0 and 1 can be configured to automatically toggle a port output whenever a timer overflow occurs. The same device pins that are used for the T0 and T1 count inputs and PWM outputs are also used for the timer toggle outputs. This function is enabled by control bits ENT0 and ENT1 in the AUXR1 register, and apply to Timer 0 and Timer 1 respectively. The port outputs will be a logic 1 prior to the first timer overflow when this mode is turned on.In order for this mode to function, the C/T bit must be cleared selecting PCLK as the clock source for the timer.

8. REAL-TIME CLOCK/SYSTEM TIMER

The **P89LPC920/921/922** has a simple Real-time Clock/System Timer that allows a user to continue running an accurate timer while the rest of the device is powered down. The Real-time Clock can be an interrupt or a wake-up source (see Figure 8-1). The Real-time Clock is a 23-bit down counter. The clock source for this counter can be either the CPU clock (CCLK) or the XTAL1-2 oscillator, provided that the XTAL1-2 oscillator is not being used as the CPU clock. If the XTAL1-2 oscillator is used as the CPU clock, then the RTC will use CCLK as its clock source regardless of the state of the RTCS1:0 in the RTCCON register. There are three SFRs used for the RTC:

- RTCCON - Real-time Clock control.
- RTCH - Real-time Clock counter reload high (bits 22-15).
- RTCL - Real-time Clock counter reload low (bits 14-7).

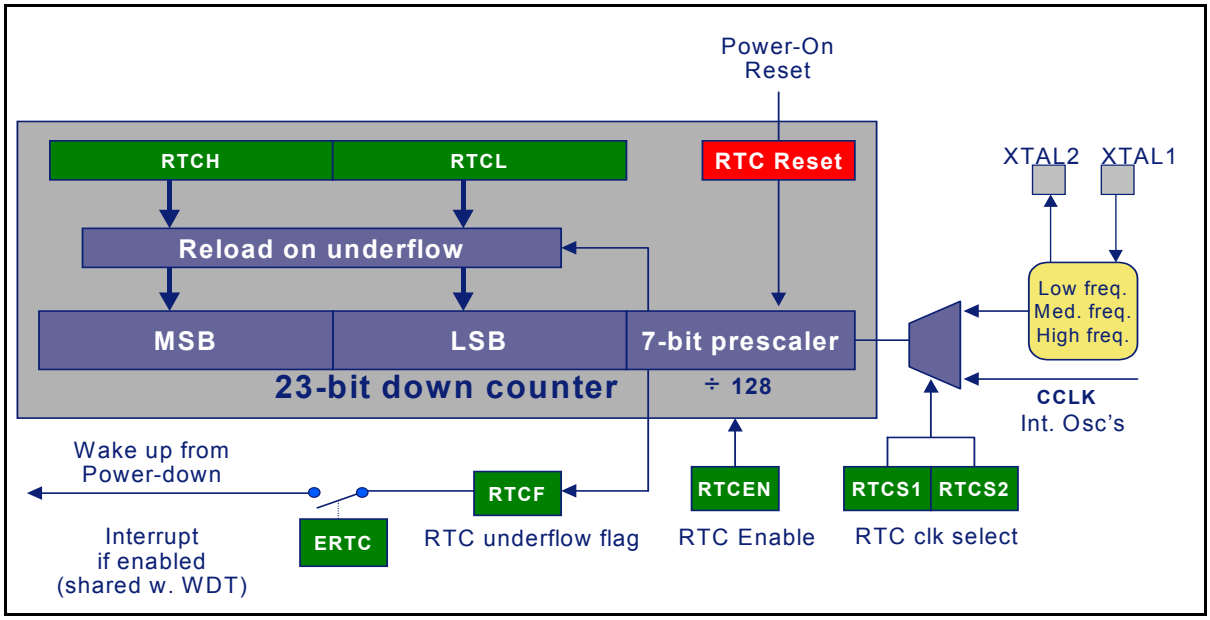

Figure 8-1: Real-time Clock/System Timer block diagram

The Real-time Clock/System Timer can be enabled by setting the RTCEN (RTCCON.0) bit. The Real-time Clock is a 23-bit down counter (initialized to all 0's when RTCEN = 0) that is comprised of a 7-bit prescaler and a 16-bit loadable down counter. When RTCEN is written with '1', the counter is first loaded with (RTCH,RTCL,'1111111') and will count down. When it reaches all 0's, the counter will be reloaded again with (RTCH,RTCL,'1111111') and a flag - RTCF (RTCCON.7) - will be set.

Any write to RTCH and RTCL in-between the Real-time Clock reloading will not cause reloading of the counter. When the current count terminates, the contents of RTCH and RTCL will be loaded into the counter and the new count will begin. An immediate reload of the counter can be forced by clearing the RTCEN bit to '0' and then setting it back to '1' .

Real-time Clock source

RTCS1-0 (RTCCON.6-5) are used to select the clock source for the RTC if either the Internal RC oscillator or the internal WD oscillator is used as the CPU clock. If the internal crystal oscillator or the external clock input on XTAL1 is used as the CPU clock, then the RTC will use CCLK as its clock source.

Changing RTCS1-0

RTCS1-0 cannot be changed if the RTC is currently enabled (RTCCON.0 =1). Setting RTCEN and updating RTCS1-0 may be done in a single write to RTCCON. However, if RTCEN = 1, this bit must first be cleared before updating RTCS1-0.

REAL-TIME CLOCK/SYSTEM TIMER

Real-time Clock interrupt/wake up

If ERTC (RTCCON.1), EWDRT (IEN1.0.6) and EA (IEN0.7) are set to '1', RTCF can be used as an interrupt source. This interrupt vector is shared with the watchdog timer. It can also be a source to wake up the device.

Reset sources affecting the Real-time Clock

Only power-on reset will reset the Real-time Clock and its associated SFRs to their default state

Table 8-1: Real-time Clock/System Timer clock sources

RTCS1 (RTCCON.6)	RTCS0 (RTCCON.5)	FOSC2 (UCFG1.2)	FOSC1 (UCFG1.1)	FOSC0 (UCFG1.0)	RTC clock source	CPU clock source
x	x	0	0	0	CCLK	High frequency crystal
x	x	0	0	1	CCLK	Medium frequency crystal
x	x	0	1	0	CCLK	Low frequency crystal
0	0	0	1	1	High frequency crystal	Internal RC oscillator
0	1				Medium frequency crystal	
1	0				Low frequency crystal	
1	1				CCLK	
0	0	1	0	0	High frequency crystal	Watchdog oscillator
0	1				Medium frequency crystal	
1	0				Low frequency crystal	
1	1				CCLK	
x	x	1	0	1	undefined	undefined
x	x	1	1	0	undefined	undefined
x	x	1	1	1	CCLK	External clock input

.

RTCCON

Address: D1h

Not bit addressable

Reset Source(s): Power-up only

Reset Value: 011xxx00B

7	6	5	4	3	2	1	0
RTCF	RTCS1	RTCS0	-	-	-	ERTC	RTCEN

BIT	SYMBOL	FUNCTION
RTCCON.7	RTCF	Real-time Clock Flag. This bit is set to '1' when the 23-bit Real-time Clock reaches a count of '0'. It can be cleared in software.
RTCCON.6-5	RTCS1-0	Real-time Clock source select (see Table 8-1).
RTCCON.4-2	-	Reserved for future use. Should not be set to 1 by user programs.
RTCCON.1	ERTC	Real-time Clock interrupt enable. The Real-time Clock shares the same interrupt as the watchdog timer. Note that if the user configuration bit WDTE (UCFG1.7) is '0', the watchdog timer can be enabled to generate an interrupt. Users can read the RTCF (RTCCON.7) bit to determine whether the Real-time Clock caused the interrupt.
RTCCON.0	RTCEN	Real-time Clock enable. The Real-time Clock will be enabled if this bit is '1'. Note that this bit will not Power down the Real-time Clock. The RTCPD bit (PCONA.7) if set, will Power down and disable this block regardless of RTCEN.

Figure 8-2: RTCCON Register

REAL-TIME CLOCK/SYSTEM TIMER

9. UART

The **P89LPC920/921/922** has an enhanced UART that is compatible with the conventional 80C51 UART except that Timer 2 overflow cannot be used as a baud rate source. The **P89LPC920/921/922** does include an independent Baud Rate Generator. The baud rate can be selected from the oscillator (divided by a constant), Timer 1 overflow, or the independent Baud Rate Generator. In addition to the baud rate generation, enhancements over the standard 80C51 UART include Framing Error detection, break detect, automatic address recognition, selectable double buffering and several interrupt options.

The UART can be operated in 4 modes:

Mode 0

Serial data enters and exits through RxD. TxD outputs the shift clock. 8 bits are transmitted or received, LSB first. The baud rate is fixed at 1/16 of the CPU clock frequency.

Mode 1

10 bits are transmitted (through TxD) or received (through RxD): a start bit (logical 0), 8 data bits (LSB first), and a stop bit (logical 1). When data is received, the stop bit is stored in RB8 in Special Function Register SCON. The baud rate is variable and is determined by the Timer 1 overflow rate or the Baud Rate Generator (see "Baud Rate Generator and selection" section).

Mode 2

11 bits are transmitted (through TxD) or received (through RxD): start bit (logical 0), 8 data bits (LSB first), a programmable 9th data bit, and a stop bit (logical 1). When data is transmitted, the 9th data bit (TB8 in SCON) can be assigned the value of 0 or 1. Or, for example, the parity bit (P, in the PSW) could be moved into TB8. When data is received, the 9th data bit goes into RB8 in Special Function Register SCON and the stop bit is not saved. The baud rate is programmable to either 1/16 or 1/32 of the CCLK frequency, as determined by the SMOD1 bit in PCON.

Mode 3

11 bits are transmitted (through TxD) or received (through RxD): a start bit (logical 0), 8 data bits (LSB first), a programmable 9th data bit, and a stop bit (logical 1). Mode 3 is the same as Mode 2 in all respects except baud rate. The baud rate in Mode 3 is variable and is determined by the Timer 1 overflow rate or the Baud Rate Generator (see "Baud Rate Generator and selection" section).

In all four modes, transmission is initiated by any instruction that uses SBUF as a destination register. Reception is initiated in Mode 0 by the condition RI = 0 and REN = 1. Reception is initiated in the other modes by the incoming start bit if REN = 1.

SFR space

The UART SFRs are at the following locations:

Table 9-1: SFR Locations for UARTs

Register	Description	SFR Location
PCON	Power Control	87H
SCON	Serial Port (UART) Control	98H
SBUF	Serial Port (UART) Data Buffer	99H
SADDR	Serial Port (UART) Address	A9H
SADEN	Serial Port (UART) Address Enable	B9H

Register	Description	SFR Location
SSTAT	Serial Port (UART) Status	BAH
BRGR1	Baud Rate Generator Rate High Byte	BFH
BRGR0	Baud Rate Generator Rate Low Byte	BEH
BRGCON	Baud Rate Generator Control	BDH

Baud Rate Generator and selection

The **P89LPC920/921/922** enhanced UART has an independent Baud Rate Generator. The baud rate is determined by a value programmed into the BRGR1 and BRGR0 SFRs. The UART can use either Timer 1 or the baud rate generator output as determined by BRGCON.2-1 (see Figure 9-2). Note that Timer T1 is further divided by 2 if the SMOD1 bit (PCON.7) is set. The independent Baud Rate Generator uses CCLK.

Updating the BRGR1 and BRGR0 SFRs

The baud rate SFRs, BRGR1 and BRGR0 must only be loaded when the Baud Rate Generator is disabled (the BRGEN bit in the BRGCON register is '0'). This avoids the loading of an interim value to the baud rate generator. **(CAUTION: If either BRGR0 or BRGR1 is written when BRGEN = 1, the result is unpredictable.)**

Table 9-2: Baud rate generation for UART

SCON.7 (SM0)	SCON.6 (SM1)	PCON.7 (SMOD1)	BRGCON.1 (SBRGS)	Receive/transmit baud rate for UART
0	0	X	X	CCLK/16
0	1	0	0	CCLK/(256-TH1)64
		1	0	CCLK/(256-TH1)32
		X	1	CCLK/((BRGR1,BRGR0)+16)
1	0	0	X	CCLK/32
		1	X	CCLK/16
1	1	0	0	CCLK/(256-TH1)64
		1	0	CCLK/(256-TH1)32
		X	1	CCLK/((BRGR1,BRGR0)+16)

BRGCON

Address: BDh

Not bit addressable

Reset Source(s): Any reset

Reset Value: xxxxxx00B

7	6	5	4	3	2	1	0
-	-	-	-	-	-	SBRGS	BRGEN

BIT	SYMBOL	FUNCTION
BRGCON.7-2	-	Reserved for future use. Should not be set to 1 by user programs.
BRGCON.1	SBRGS	Select Baud Rate Generator as the source for baud rates to UART in modes 1 & 3 (see Table 9-2 for details)
BRGCON.0	BRGEN	Baud Rate Generator Enable. Enables the baud rate generator. BRGR1 and BRGR0 can only be written when BRGEN =0.

Figure 9-1: BRGCON register

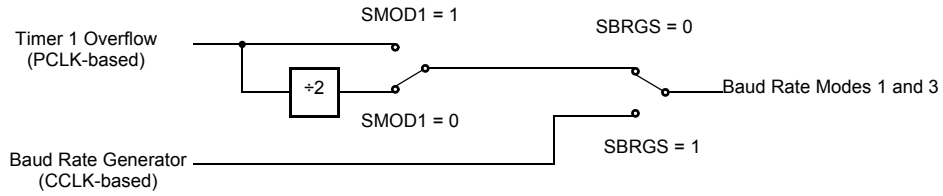

Figure 9-2: Baud rate generation for UART (Modes 1, 3)

Framing Error

A Framing error occurs when the stop bit is sensed as a logic '0'. A Framing error is reported in the status register (SSTAT). In addition, if SMOD0 (PCON.6) is 1, framing errors can be made available in SCON.7. If SMOD0 is 0, SCON.7 is SM0. It is recommended that SM0 and SM1 (SCON.7-6) are programmed when SMOD0 is '0'.

Break Detect

A break detect is reported in the status register (SSTAT). A break is detected when any 11 consecutive bits are sensed low. Since a break condition also satisfies the requirements for a framing error, a break condition will also result in reporting a framing error. Once a break condition has been detected, the UART will go into an idle state and remain in this idle state until a stop bit has been received. The break detect can be used to reset the device and force the device into ISP mode by setting the EBRR bit (AUXR1.6)

.

SCON

Address: 98h

Bit addressable

Reset Source(s): Any reset

Reset Value: 00000000B

7	6	5	4	3	2	1	0
SM0/FE	SM1	SM2	REN	TB8	RB8	TI	RI

BIT	SYMBOL	FUNCTION
SCON.7	SM0/FE	The use of this bit is determined by SMOD0 in the PCON register. If SMOD0 = 0, this bit is read and written as SM0, which with SM1, defines the serial port mode. If SMOD0 = 1, this bit is read and written as FE (Framing Error). FE is set by the receiver when an invalid stop bit is detected. Once set, this bit cannot be cleared by valid frames but is cleared by software. (Note: UART mode bits SM0 and SM1 should be programmed when SMOD0 is '0' - default mode on any reset.)
SCON. 6	SM1	With SM0, defines the serial port mode (see table below).

SM0, SM1	UART Mode	UART 0 Baud Rate
0 0	0: shift register	CCLK/16 (default mode on any reset)
0 1	1: 8-bit UART	Variable (see Table 9-2)
1 0	2: 9-bit UART	CCLK/32 or CCLK/16
1 1	3: 9-bit UART	Variable (see Table 9-2)

SCON.5	SM2	Enables the multiprocessor communication feature in Modes 2 and 3. In Mode 2 or 3, if SM2 is set to 1, then RI will not be activated if the received 9th data bit (RB8) is 0. In Mode 0, SM2 should be 0. In Mode 1, SM2 must be 0.
SCON.4	REN	Enables serial reception. Set by software to enable reception. Clear by software to disable reception.
SCON.3	TB8	The 9th data bit that will be transmitted in Modes 2 and 3. Set or clear by software as desired.
SCON.2	RB8	The 9th data bit that was received in Modes 2 and 3. In Mode 1 (SM2 must be 0), RB8 is the stop bit that was received. In Mode 0, RB8 is undefined.
SCON.1	TI	Transmit interrupt flag. Set by hardware at the end of the 8th bit time in Mode 0, or at the the stop bit (see description of INTLO bit in SSTAT register) in the other modes. Must be cleared by software.
SCON.0	RI	Receive interrupt flag. Set by hardware at the end of the 8th bit time in Mode 0, or approximately halfway through the stop bit time in Mode 1. For Mode 2 or Mode 3, if SMOD0, it is set near the middle of the 9th data bit (bit 8). If SMOD0 = 1, it is set near the middle of the stop bit (see SM2 - SCON.5 - for exceptions). Must be cleared by software.

Figure 9-3: Serial Port Control register (SCON)

SSTAT

Address: BAh

Not bit addressable

Reset Source(s): Any reset

Reset Value: 00000000B

7	6	5	4	3	2	1	0
DBMOD	INTLO	CIDIS	DBISEL	FE	BR	OE	STINT

BIT	SYMBOL	FUNCTION
SSTAT.7	DBMOD	Double buffering mode. When set = 1 enables double buffering. Must be '0' for UART mode 0. In order to be compatible with existing 80C51 devices, this bit is reset to '0' to disable double buffering.
SSTAT.6	INTLO	Transmit interrupt position. When cleared = 0, the Tx interrupt is issued at the beginning of the stop bit. When set =1, the Tx interrupt is issued at end of the stop bit. Must be '0' for mode 0. Note that in the case of single buffering, if the Tx interrupt occurs at the end of a STOP bit, a gap may exist before the next start bit.
SSTAT.5	CIDIS	Combined Interrupt Disable. When set = 1, Rx and Tx interrupts are separate. When cleared = 0, the UART uses a combined Tx/Rx interrupt (like a conventional 80C51 UART). This bit is reset to '0' to select combined interrupts.
SSTAT.4	DBISEL	Double buffering transmit interrupt select. Used only if double buffering is enabled.This bit controls the number of interrupts that can occur when double buffering is enabled. When set, one transmit interrupt is generated after each character written to SBUF, and there is also one more transmit interrupt generated at the beginning (INTLO = 0) or the end (INTLO = 1) of the STOP bit of the last character sent (i.e., no more data in buffer). This last interrupt can be used to indicate that all transmit operations are over. When cleared = 0, only one transmit interrupt is generated per character written to SBUF. Must be '0' when double buffering is disabled. Note that except for the first character written (when buffer is empty), the location of the transmit interrupt is determined by INTLO. When the first character is written, the transmit interrupt is generated immediately after SBUF is written.
SSTAT.3	FE	Framing error flag is set when the receiver fails to see a valid STOP bit at the end of the frame. Cleared by software.
SSTAT.2	BR	Break Detect flag. A break is detected when any 11 consecutive bits are sensed low. Cleared by software.
SSTAT.1	OE	Overrun Error flag is set if a new character is received in the receiver buffer while it is still full (before the software has read the previous character from the buffer), i.e., when bit 8 of a new byte is received while RI in SCON is still set. Cleared by software.
SSTAT.0	STINT	Status Interrupt Enable. When set =1, FE, BR, or OE can causean interrupt. The interrupt used (vector address 0023h) is shared with RI (CIDIS = 1) or the combined TI/RI (CIDIS = 0). When cleared = 0, FE, BR, OE cannot cause an interrupt. (Note: FE, BR, or OE is often accompanied by a RI, which will generate an interrupt regardless of the state of STINT). Note that BR can cause a break detect reset if EBRR (AUXR1.6) is set to '1'.

Figure 9-4: Serial Port Status register (SSTAT)

More about UART Mode 0

In Mode 0, a write to SBUF will initiate a transmission. At the end of the transmission, TI (SCON.1) is set, which must be cleared in software. Double buffering must be disabled in this mode.

Reception is initiated by clearing RI (SCON.0). Synchronous serial transfer occurs and RI will be set again at the end of the transfer. When RI is cleared, the reception of the next character will begin. Refer to Figure 9-5 for timing.

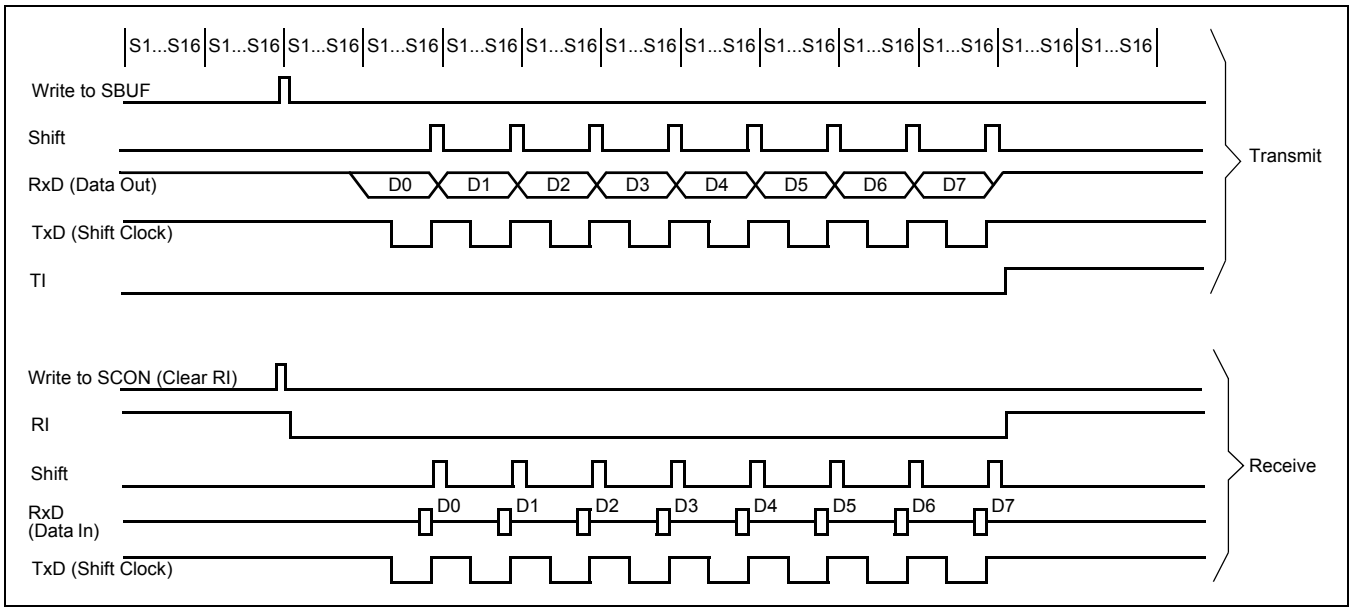

Figure 9-5: Serial Port Mode 0 (double buffering must be disabled)

More about UART Mode 1

Reception is initiated by detecting a 1-to-0 transition on RxD. RxD is sampled at a rate 16 times the programmed baud rate. When a transition is detected, the divide-by-16 counter is immediately reset. Each bit time is thus divided into 16 counter states. At the 7th, 8th, and 9th counter states, the bit detector samples the value of RxD. The value accepted is the value that was seen in at least 2 of the 3 samples. This is done for noise rejection. If the value accepted during the first bit time is not 0, the receive circuits are reset and the receiver goes back to looking for another 1-to-0 transition. This provides rejection of false start bits. If the start bit proves valid, it is shifted into the input shift register, and reception of the rest of the frame will proceed.

The signal to load SBUF and RB8, and to set RI, will be generated if, and only if, the following conditions are met at the time the final shift pulse is generated: RI = 0 and either SM2=0 or the received stop bit =1. If either of these two conditions is not met, the received frame is lost. If both conditions are met, the stop bit goes into RB8, the 8 data bits go into SBUF, and RI is activated.

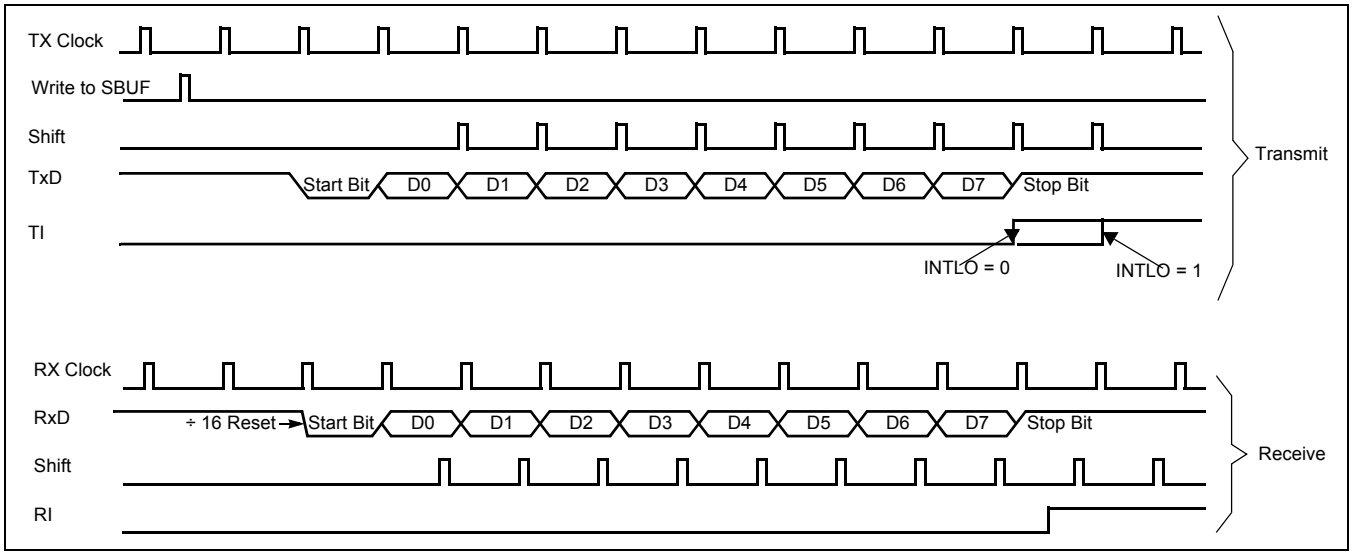

Figure 9-6: Serial Port Mode 1 (only single transmit buffering case is shown)

More about UART Modes 2 and 3

Reception is the same as in Mode 1.

The signal to load SBUF and RB8, and to set RI, will be generated if, and only if, the following conditions are met at the time the final shift pulse is generated. (a) RI = 0, and (b) Either SM2 = 0, or the received 9th data bit = 1. If either of these conditions is not met, the received frame is lost, and RI is not set. If both conditions are met, the received 9th data bit goes into RB8, and the first 8 data bits go into SBUF.

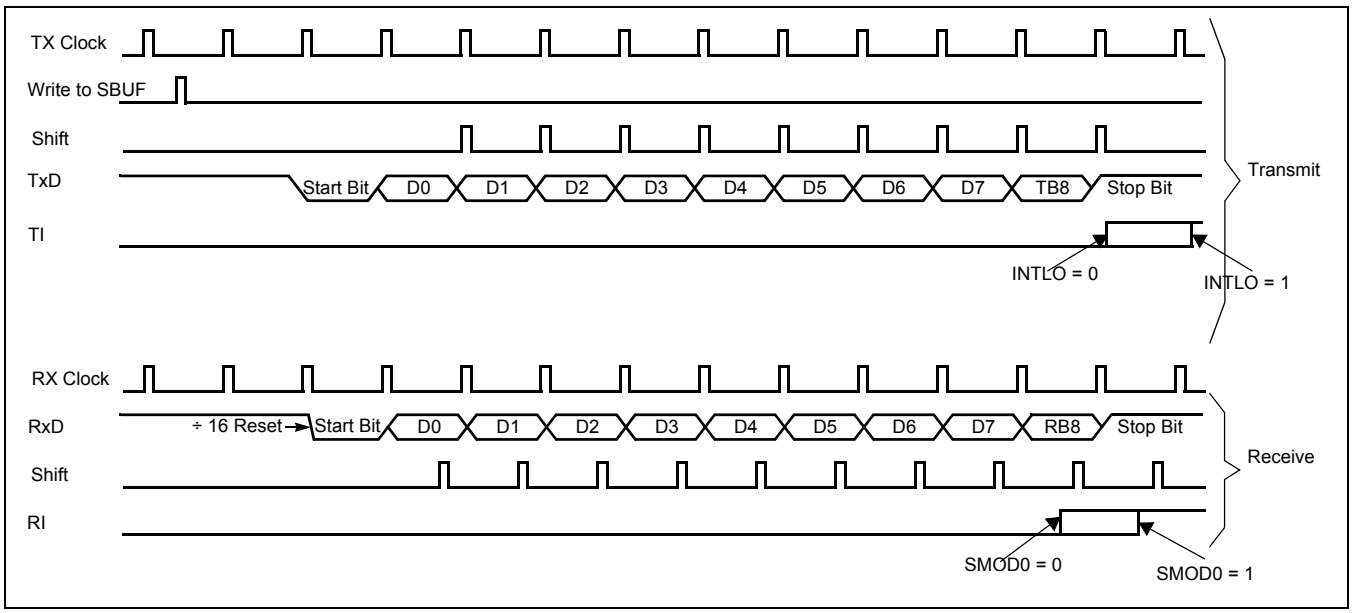

Figure 9-7: Serial Port Mode 2 or 3 (only single transmit buffering case is shown)

Framing Error and RI in Modes 2 and 3 with SM2 = 1

If SM2 = 1 in modes 2 and 3, RI and FE behaves as in the following table.

Table 9-3: FE and RI when SM2 = 1 in Modes 2 and 3

Mode	PCON.6 (SMOD0)	RB8	RI	FE
2	0	0	No RI when RB8 = 0	Occurs during STOP bit
		1	Similar to Figure 9-7, with SMOD0 = 0, RI occurs during RB8, one bit before FE	Occurs during STOP bit
3	1	0	No RI when RB8 = 0	Will NOT occur
		1	Similar to Figure 9-7, with SMOD0 = 1, RI occurs during STOP bit	Occurs during STOP bit

Break Detect

. A break is detected when 11 consecutive bits are sensed low and is reported in the status register (SSTAT). For Mode 1, this consists of the start bit, 8 data bits, and two stop bit times. For Modes 2 & 3, this consists of the start bit, 9 data bits, and one stop

bit. The break detect bit is cleared in software or by a reset. The break detect can be used to reset the device and force the device into ISP mode. This occurs if the UART is enabled and the the EBRR bit (AUXR1.6) is set and a break occurs.

Double buffering

The UART has a transmit double buffer that allows buffering of the next character to be wriiten to SBUF while the first character is being transmitted. Double buffering allows transmission of a string of characters with only one stop bit between any two characters, provided the next character is written between the start bit and the stop bit of the previous character.

Double buffering can be disabled. If disabled (DBMOD, i.e. SSTAT.7 = 0), the UART is compatible with the conventional 80C51 UART. If enabled, the UART allows writing to SnBUF while the previous data is being shifted out.

Double buffering in different modes

Double buffering is only allowed in Modes 1, 2 and 3. When operated in Mode 0, double buffering must be disabled (DBMOD = 0).

Transmit interrupts with double buffering enabled (Modes 1, 2 and 3)

Unlike the conventional UART, when double buffering is enabled, the Tx interrupt is generated when the double buffer is ready to receive new data. The following occurs during a transmission (assuming eight data bits):

1. The double buffer is empty initially.
2. The CPU writes to SBUF.
3. The SBUF data is loaded to the shift register and a Tx interrupt is generated immediately.
4. If there is more data, go to 6, else continue on 5.
5. If there is no more data, then:
   - If DBISEL is '0', no more interrupts will occur.
   - If DBISEL is '1' and INTLO is '0', a Tx interrupt will occur at the beginning of the STOP bit of the data currently in the shifter (which is also the last data).
   - If DBISEL is '1' and INTLO is '1', a Tx interrupt will occur at the end of the STOP bit of the data currently in the shifter (which is also the last data).
6. If there is more data, the CPU writes to SBUF again. Then:
   - If INTLO is '0', the new data will be loaded and a Tx interrupt will occur at the beginning of the STOP bit of the data currently in the shifter.
   - If INTLO is '1', the new data will be loaded and a Tx interrupt will occur at the end of the STOP bit of the data currently in the shifter.

   Go to 3.

Note that if DBISEL is '1' and the CPU is writing to SBUF when the STOP bit of the last data is shifted out, there can be an uncertainty of whether a Tx interrupt is generated already with the UART not knowing whether there is any more data following.

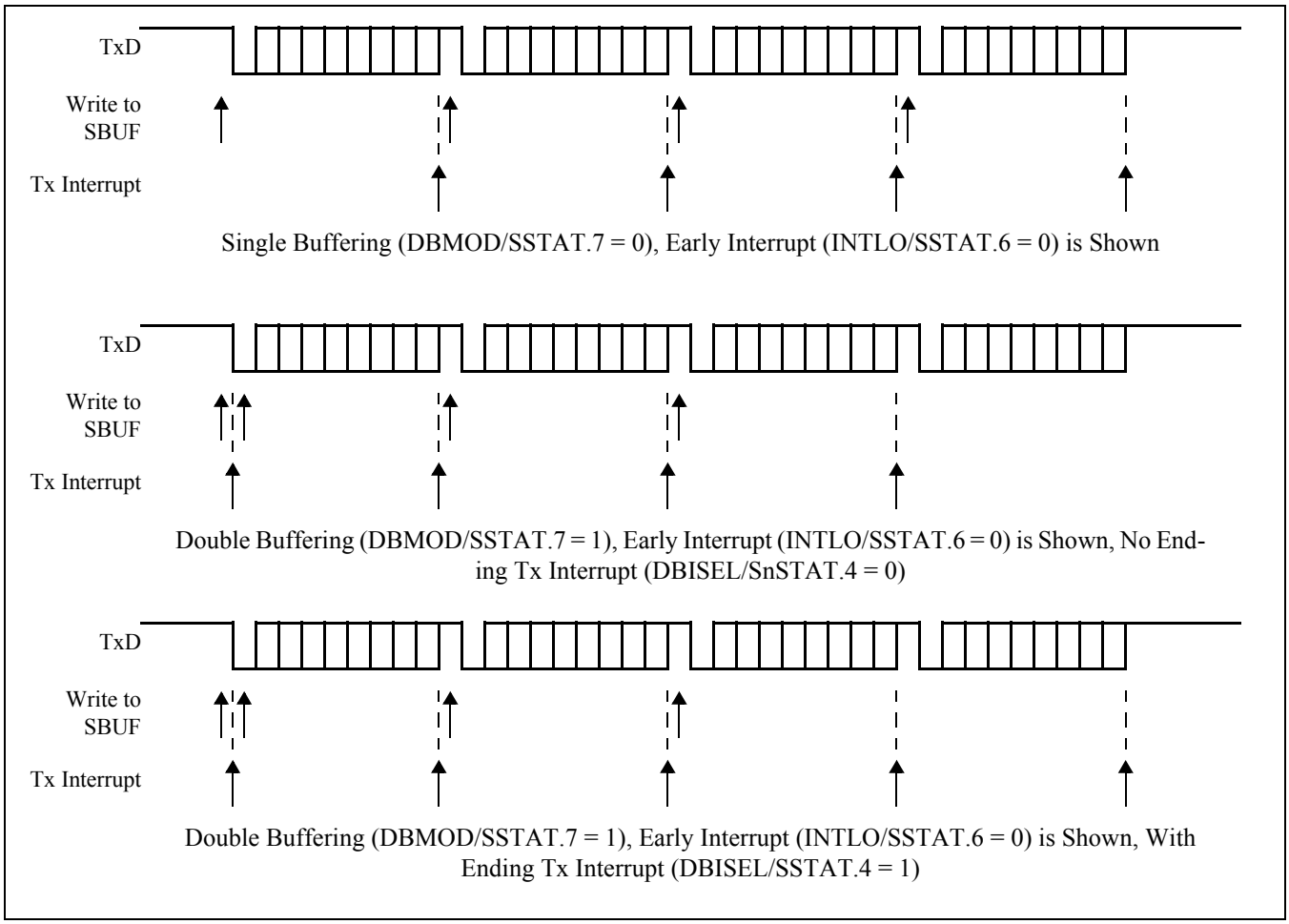

Figure 9-8: Transmission with and without double buffering

The 9th bit (bit 8) in double buffering (Modes 1, 2 and 3)

If double buffering is disabled (DBMOD, i.e. SSTAT.7 = 0), TB8 can be written before or after SBUF is written, provided TB8 is updated before that TB8 is shifted out. TB8 must not be changed again until after TB8 shifting has been completed, as indicated by the Tx interrupt.

If double buffering is enabled, TB8 MUST be updated before SBUF is written, as TB8 will be double-buffered together with SBUF data. The operation described in the section "Transmit interrupts with double buffering enabled (Modes 1, 2 and 3)" becomes as follows:

1. The double buffer is empty initially.
2. The CPU writes to TB8.
3. The CPU writes to SBUF.
4. The SBUF/TB8 data is loaded to the shift register and a Tx interrupt is generated immediately.
5. If there is more data, go to 7, else continue on 6.
6. If there is no more data, then:
   - If DBISEL is '0', no more interrupt will occur.
   - If DBISEL is '1' and INTLO is '0', a Tx interrupt will occur at the beginning of the STOP bit of the data currently in the shifter (which is also the last data).
   - If DBISEL is '1' and INTLO is '1', a Tx interrupt will occur at the end of the STOP bit of the data currently in the shifter (which is also the last data).
7. If there is more data, the CPU writes to TB8 again.

8. The CPU writes to SBUF again. Then:
   - If INTLO is '0', the new data will be loaded and a Tx interrupt will occur at the beginning of the STOP bit of the data currently in the shifter.
   - If INTLO is '1', the new data will be loaded and a Tx interrupt will occur at the end of the STOP bit of the data currently in the shifter.

   Go to 4.

   Note that if DBISEL is '1' and the CPU is writing to SBUF when the STOP bit of the last data is shifted out, there can be an uncertainty of whether a Tx interrupt is generated already with the UART not knowing whether there is any more data following.

Multiprocessor communications

UART modes 2 and 3 have a special provision for multiprocessor communications. In these modes, 9 data bits are received or transmitted. When data is received, the 9th bit is stored in RB8. The UART can be programmed such that when the stop bit is received, the serial port interrupt will be activated only if RB8 = 1. This feature is enabled by setting bit SM2 in SCON. One way to use this feature in multiprocessor systems is as follows:

When the master processor wants to transmit a block of data to one of several slaves, it first sends out an address byte which identifies the target slave. An address byte differs from a data byte in that the 9th bit is 1 in an address byte and 0 in a data byte. With SM2 = 1, no slave will be interrupted by a data byte. An address byte, however, will interrupt all slaves, so that each slave can examine the received byte and see if it is being addressed. The addressed slave will clear its SM2 bit and prepare to receive the data bytes that follow. The slaves that weren't being addressed leave their SM2 bits set and go on about their business, ignoring the subsequent data bytes.

Note that SM2 has no effect in Mode 0, and must be '0' in Mode 1.

Automatic address recognition

Automatic address recognition is a feature which allows the UART to recognize certain addresses in the serial bit stream by using hardware to make the comparisons. This feature saves a great deal of software overhead by eliminating the need for the software to examine every serial address which passes by the serial port. This feature is enabled by setting the SM2 bit in SCON. In the 9 bit UART modes (mode 2 and mode 3), the Receive Interrupt flag (RI) will be automatically set when the received byte contains either the "Given" address or the "Broadcast" address. The 9 bit mode requires that the 9th information bit is a 1 to indicate that the received information is an address and not data.

Using the Automatic Address Recognition feature allows a master to selectively communicate with one or more slaves by invoking the Given slave address or addresses. All of the slaves may be contacted by using the Broadcast address. Two special Function Registers are used to define the slave's address, SADDR, and the address mask, SADEN. SADEN is used to define which bits in the SADDR are to be used and which bits are "don't care". The SADEN mask can be logically ANDed with the SADDR to create the "Given" address which the master will use for addressing each of the slaves. Use of the Given address allows multiple slaves to be recognized while excluding others. The following examples will help to show the versatility of this scheme:

```
Slave 0  SADDR  = 1100 0000
         SADEN  = 1111 1101
         Given  = 1100 00X0

Slave 1  SADDR  = 1100 0000
         SADEN  = 1111 1110
         Given  = 1100 000X
```

In the above example SADDR is the same and the SADEN data is used to differentiate between the two slaves. Slave 0 requires a 0 in bit 0 and it ignores bit 1. Slave 1 requires a 0 in bit 1 and bit 0 is ignored. A unique address for Slave 0 would be 1100 0010 since slave 1 requires a 0 in bit 1. A unique address for slave 1 would be 1100 0001 since a 1 in bit 0 will exclude slave 0. Both slaves can be selected at the same time by an address which has bit 0 = 0 (for slave 0) and bit 1 = 0 (for slave 1). Thus, both could be addressed with 1100 0000.

In a more complex system the following could be used to select slaves 1 and 2 while excluding slave 0:

```
Slave 0  SADDR  = 1100 0000
         SADEN  = 1111 1001
         Given  = 1100 0XX0

Slave 1  SADDR  = 1110 0000
         SADEN  = 1111 1010
         Given  = 1110 0X0X

Slave 2  SADDR  = 1110 0000
         SADEN  = 1111 1100
         Given  = 1110 00XX
```

In the above example the differentiation among the 3 slaves is in the lower 3 address bits. Slave 0 requires that bit 0 = 0 and it can be uniquely addressed by 1110 0110. Slave 1 requires that bit 1 = 0 and it can be uniquely addressed by 1110 and 0101. Slave 2 requires that bit 2 = 0 and its unique address is 1110 0011. To select Slaves 0 and 1 and exclude Slave 2 use address 1110 0100, since it is necessary to make bit 2 = 1 to exclude slave 2. The Broadcast Address for each slave is created by taking the logical OR of SADDR and SADEN. Zeros in this result are treated as don't-cares. In most cases, interpreting the don't-cares as ones, the broadcast address will be FF hexadecimal. Upon reset SADDR and SADEN are loaded with 0s. This produces a given address of all "don't cares" as well as a Broadcast address of all "don't cares". This effectively disables the Automatic Addressing mode and allows the microcontroller to use standard UART drivers which do not make use of this feature.

10. I2C INTERFACE

The I2C-bus uses two wires, serial clock (SCL) and serial data (SDA) to transfer information between devices connected to the bus, and has the following features:

- Bidirectional data transfer between masters and slaves
- Multimaster bus (no central master)
- Arbitration between simultaneously transmitting masters without corruption of serial data on the bus
- Serial clock synchronization allows devices with different bit rates to communicate via one serial bus
- Serial clock synchronization can be used as a handshake mechanism to suspend and resume serial transfer
- The I2C-bus may be used for test and diagnostic purposes

A typical I2C-bus configuration is shown in Figure 1. Depending on the state of the direction bit (R/W), two types of data transfers are possible on the I2C-bus:

- Data transfer from a master transmitter to a slave receiver. The first byte transmitted by the master is the slave address. Next follows a number of data bytes. The slave returns an acknowledge bit after each received byte.
- Data transfer from a slave transmitter to a master receiver. The first byte (the slave address) is transmitted by the master. The slave then returns an acknowledge bit. Next follows the data bytes transmitted by the slave to the master. The master returns an acknowledge bit after all received bytes other than the last byte. At the end of the last received byte, a "not acknowledge" is returned. The master device generates all of the serial clock pulses and the START and STOP conditions. A transfer is ended with a STOP condition or with a repeated START condition. Since a repeated START condition is also the beginning of the next serial transfer, the I2C-bus will not be released.

The **P89LPC920/921/922** device provides a byte-oriented I2C interface. It has four operation modes: Master Transmitter Mode, Master Receiver Mode, Slave Transmitter Mode and Slave Receiver Mode.

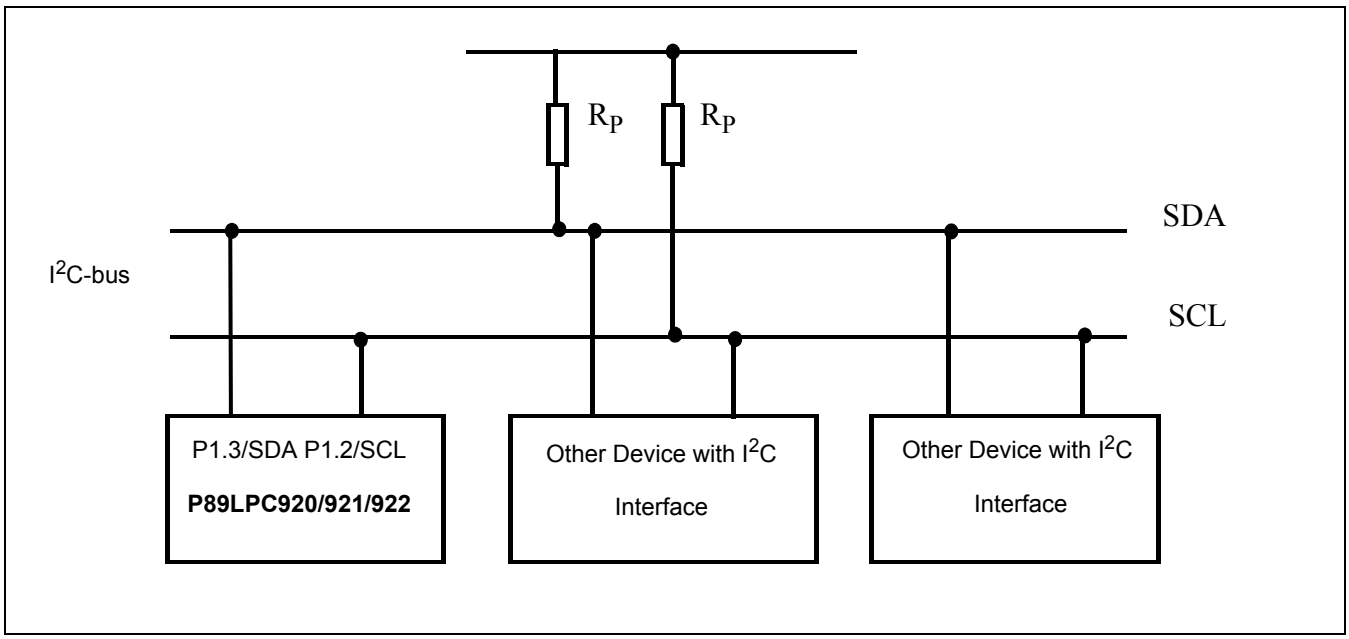

Figure 1: I2C-bus configuration

The **P89LPC920/921/922** CPU interfaces with the I2C-bus through six Special Function Registers (SFRs): I2CON (I2C Control Register), I2DAT (I2C Data Register), I2STAT (I2C Status Register), I2ADR (I2C Slave Address Register), I2SCLH (SCL Duty Cycle Register High Byte), and I2SCLL (SCL Duty Cycle Register Low Byte).

I2C Data register

I2DAT register contains the data to be transmitted or the data received. The CPU can read and write to this 8-bit register while it is not in the process of shifting a byte. Thus this register should only be accessed when the SI bit is set. Data in I2DAT remains stable as long as the SI bit is set. Data in I2DAT is always shifted from right to left: the first bit to be transmitted is the MSB (bit 7), and after a byte has been received, the first bit of received data is located at the MSB of I2DAT.

.

I2DAT

Address: DAH

Not bit addressable

Reset Source(s): Any reset

Reset Value: 00000000B

7	6	5	4	3	2	1	0
I2DAT.7	I2DAT.6	I2DAT.5	I2DAT.4	I2DAT.3	I2DAT.2	I2DAT.1	I2DAT.0

Figure 2: I2C Data register

I2C Slave Address register

I2ADR register is readable and writable, and is only used when the I2C interface is set to slave mode. In master mode, this register has no effect. The LSB of I2ADR is general call bit. When this bit is set, the general call address (00h) is recognized.

I2ADR

Address: DBH

Not bit addressable

Reset Source(s): Any reset

Reset Value: 00000000B

7	6	5	4	3	2	1	0
I2ADR.6	I2ADR.5	I2ADR.4	I2ADR.3	I2ADR.2	I2ADR.1	I2ADR.0	GC

BIT	SYMBOL	FUNCTION
I2ADR7, 1	I2ADR.6, 0	7 bit own slave address. When in master mode, the contents of this register has no effect.
I2ADR7.0	GC	General call bit. When set, the general call address (00H) is recognized, otherwise it is ignored.

Figure 3: I2C Slave Address register

I2C Control register

The CPU can read and write this register. There are two bits are affected by hardware: the SI bit and the STO bit. The SI bit is set by hardware and the STO bit is cleared by hardware.

CRSEL determines the SCL source when the I2C is in master mode. In slave mode this bit is ignored and the bus will automatically synchronize with any clock frequency up to 400 kHz from the master I2C device. When CRSEL = 1, the I2C interface uses the Timer1 overflow rate divided by 2 for the I2C clock rate. Timer 1 should be programmed by the user in 8 bit auto-reload mode (Mode 2).

Data rate of I2C = Timer overflow rate / 2 = PCLK / (2*(256-reload value)),

If fosc = 12 MHz, reload value is 0 - 255, so I2C data rate range is 11.72 Kbit/sec - 3000 Kbit/sec.

When CRSEL = 0, the I2C interface uses the internal clock generator based on the value of I2SCLL and I2CSCLH register. The duty cycle does not need to be 50%.

The STA bit is START flag. Setting this bit causes the I^{2}C interface to enter master mode and attempt transmitting a START condition or transmitting a repeated START condition when it is already in master mode.

The STO bit is STOP flag. Setting this bit causes the I^{2}C interface to transmit a STOP condition in master mode, or recovering from an error condition in slave mode.

If the STA and STO are both set, then a STOP condition is transmitted to the I^{2}C-bus if it is in master mode, and transmits a START condition afterwards. If it is in slave mode, an internal STOP condition will be generated, but it is not transmitted to the bus.

I2CON

Address: D8h

Bit addressable

Reset Source(s): Any reset

Reset Value: x00000x0B

7	6	5	4	3	2	1	0
-	I2EN	STA	STO	SI	AA	-	CRSEL

BIT	SYMBOL	FUNCTION
I2CON.7	-	Reserved for future use. Should not be set to 1 by user programs.
I2CON.6	I2EN	I^{2}C Interface Enable. When set, enables the I^{2}C interface. When clear, the I^{2}C function is disabled.
I2CON.5	STA	Start Flag. STA = 1: I^{2}C enters master mode, checks the bus and generates a START condition if the bus is free. If the bus is not free, it waits for a STOP condition (which will free the bus) and generates a START condition after a delay of a half clock period of the internal clock generator. When the I^{2}C interface is already in master mode and some data is transmitted or received, it transmits a repeated START condition. STA may be set at any time, it may also be set when the I^{2}C interface is in an addressed slave mode. STA = 0: no START condition or repeated START condition will be generated.
I2CON.4	STO	STOP Flag. STO = 1: In master mode, a STOP condition is transmitted to the I^{2}C-bus. When the bus detects the STOP condition, it will clear STO bit automatically. In slave mode, setting this bit can recover from an error condition. In this case, no STOP condition is transmitted to the bus. The hardware behaves as if a STOP condition has been received and it switches to "not addressed" Slave Receiver Mode. The STO flag is cleared by hardware automatically.
I2CON.3	SI	I^{2}C Interrupt Flag. This bit is set when one of the 25 possible I^{2}C states is entered. When EA bit and EI2C (IEN1.0) bit are both set, an interrupt is requested when SI is set.. Must be cleared by software by writing 0 to this bit.
I2CON.2	AA	The Assert Acknowledge Flag. When set to 1, an acknowledge (low level to SDA) will be returned during the acknowledge clock pulse on the SCL line on the following situations: (1)The "own slave address" has been received. (2)The general call address has been received while the general call bit(GC) in I2ADR is set. (3) A data byte has been received while the I^{2}C interface is in the Master Receiver Mode. (4)A data byte has been received while the I^{2}C interface is in the addressed Slave Receiver Mode When cleared to 0, an not acknowledge (high level to SDA) will be returned during the acknowledge clock pulse on the SCL line on the following situations: (1) A data byte has been received while the I^{2}C interface is in the Master Receiver Mode. (2) A data byte has been received while the I^{2}C interface is in the addressed Slave Receiver Mode.
I2CON.1	-	Reserved for future use. Should not be set to 1 by user programs.
I2CON.0	CRSEL	SCL clock selection. When set = 1, Timer1 overflow generates SCL, when cleared = 0, the internal SCL generator is used base on values of I2SCLH and I2SCLL.

Figure 4: I^{2}C Control register

I2C Status register

This is a read-only register. It contains the status code of I2C interface. The least three bits are always 0. There are 26 possible status codes. When the code is F8H, there is no relevant information available and SI bit is not set. All other 25 status codes correspond to defined I2C states. When any of these states entered, the SI bit will be set. Refer to Table 2 to Table 5 for details.

I2STAT

Address: D9h

Not bit addressable

Reset Source(s): Any reset

Reset Value: 11111000B

7	6	5	4	3	2	1	0
STA.4	STA.3	STA.2	STA.1	STA.0	0	0	0

BIT	SYMBOL	FUNCTION
I2STAT7, 3	STA.4, 0	I2C the status code.
I2STAT2, 0	-	These three bits are not used and always set to 0.

Figure 5: I2C Status register

I2C SCL Duty Cycle registers I2SCLH and I2SCLL

When the internal SCL generator is selected for the I2C interface by setting CRSEL = 0 in the I2CON register, the user must set values for registers I2SCLL and I2SCLH to select the data rate. I2SCLH defines the number of PCLK cycles for SCL = high, I2SCLL defines the number of PCLK cycles for SCL = low. The frequency is determined by the following formula:

$$\text{Bit Frequency} = f_{PCLK} / (2*(I2SCLH + I2SCLL))$$

Where f_{PCLK} is the frequency of PCLK.

The values for I2SCLL and I2SCLH do not have to be the same; the user can give different duty cycle's for SCL by setting these two registers. However, the value of the register must ensure that the data rate is in the I2C data rate range of 0 - 400 kHz. Thus the values of I2SCLL and I2SCLH have some restrictions and values for both registers greater than 3 PCLKs are recommended.

Table 1: I2C clock rates selection

I2SCLL + I2SCLH	CRSEL	Bit data rate (Kbit/sec) at f_{OSC}				
		7.373 MHz	3.6865 MHz	1.8433 MHz	12 MHz	6 MHz
6	0	-	307	154	-	-
7	0	-	263	132	-	-
8	0	-	230	115	-	375
9	0	-	205	102	-	333
10	0	369	184	92	-	300
15	0	246	123	61	400	200
25	0	147	74	37	240	120
30	0	123	61	31	200	100
50	0	74	37	18	120	60
60	0	61	31	15	100	50

Table 1: I2C clock rates selection

I2SCLL + I2SCLH	CRSEL	Bit data rate (Kbit/sec) at f_{OSC}				
		7.373 MHz	3.6865 MHz	1.8433 MHz	12 MHz	6 MHz
100	0	37	18	9	60	30
150	0	25	12	6	40	20
200	0	18	9	5	30	15
-	1	3.6 - 922 Kbps timer1 in mode2	1.8 - 461 Kbps timer1 in mode 2	0.9 - 230 Kbps timer1 in mode 2	5.86 - 1500 Kbps timer1 in mode 2	2.93 - 750 Kbps timer1 in mode 2

I2C operation mode

Master Transmitter Mode

In this mode data is transmitted from master to slave. Before the Master Transmitter Mode can be entered, I2CON must be initialized as follows:

	7	6	5	4	3	2	1	0
I2CON (D8h)	-	I2EN	STA	STO	SI	AA	-	CRSEL
	-	1	0	0	0	x	-	bit rate

Figure 10-6: I2C Control register

CRSEL defines the bit rate. I2EN must be set to 1 to enable the I2C function. If the AA bit is 0, it will not acknowledge its own slave address or the general call address in the event of another device becoming master of the bus and it can not enter slave mode. STA, STO, and SI bits must be cleared to 0.

The first byte transmitted contains the slave address of the receiving device (7 bits) and the data direction bit. In this case, the data direction bit (R/W) will be logic 0 indicating a write. Data is transmitted 8 bits at a time. After each byte is transmitted, an acknowledge bit is received. START and STOP conditions are output to indicate the beginning and the end of a serial transfer.

The I2C will enter Master Transmitter Mode by setting the STA bit. The I2C logic will send the START condition as soon as the bus is free. After the START condition is transmitted, the SI bit is set, and the status code in I2STAT should be 08h. This status code must be used to vector to an interrupt service routine where the user should load the slave address to I2DAT (Data Register) and data direction bit (SLA+W). The SI bit must be cleared before the data transfer can continue.

When the slave address and R/W bit have been transmitted and an acknowledgment bit has been received, the SI bit is set again, and the possible status codes are 18h, 20h, or 38h for the master mode or 68h, 78h, or 0B0h if the slave mode was enabled (setting AA = Logic 1). The appropriate action to be taken for each of these status codes is shown in Table 2.

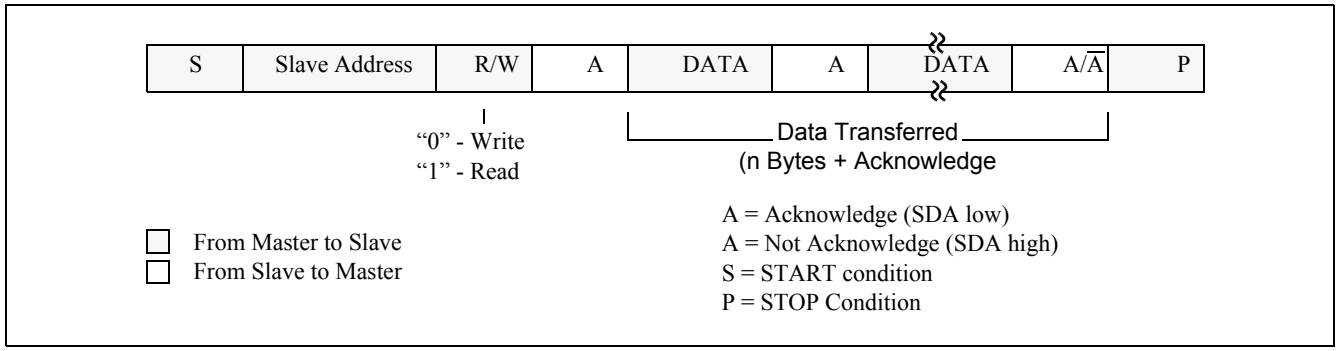

Figure 7: Format in the Master Transmitter Mode

Master Receiver Mode

In the Master Receiver Mode, data is received from a slave transmitter. The transfer started in the same manner as in the Master Transmitter Mode. When the START condition has been transmitted, the interrupt service routine must load the slave address and the data direction bit to I2C Data Register (I2DAT). The SI bit must be cleared before the data transfer can continue.

When the slave address and data direction bit have been transmitted and an acknowledge bit has been received, the SI bit is set, and the Status Register will show the status code. For master mode, the possible status codes are 40H, 48H, or 38H. For slave mode, the possible status codes are 68H, 78H, or B0H. Refer to Table 3 for details.

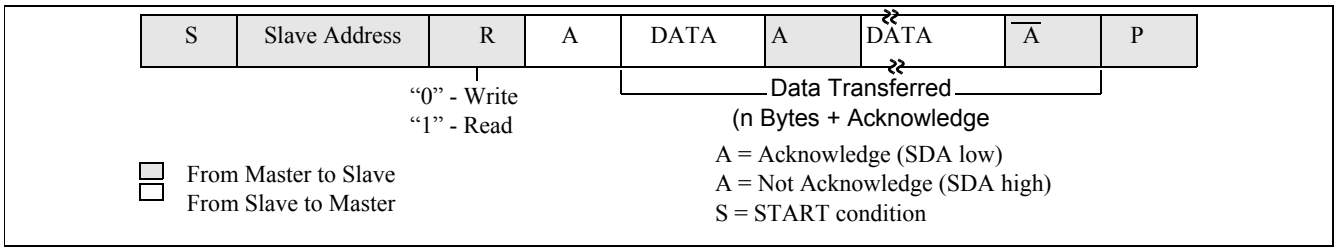

Figure 8: Format of Master Receiver Mode

After a repeated START condition, I2C may switch to the Master Transmitter Mode.

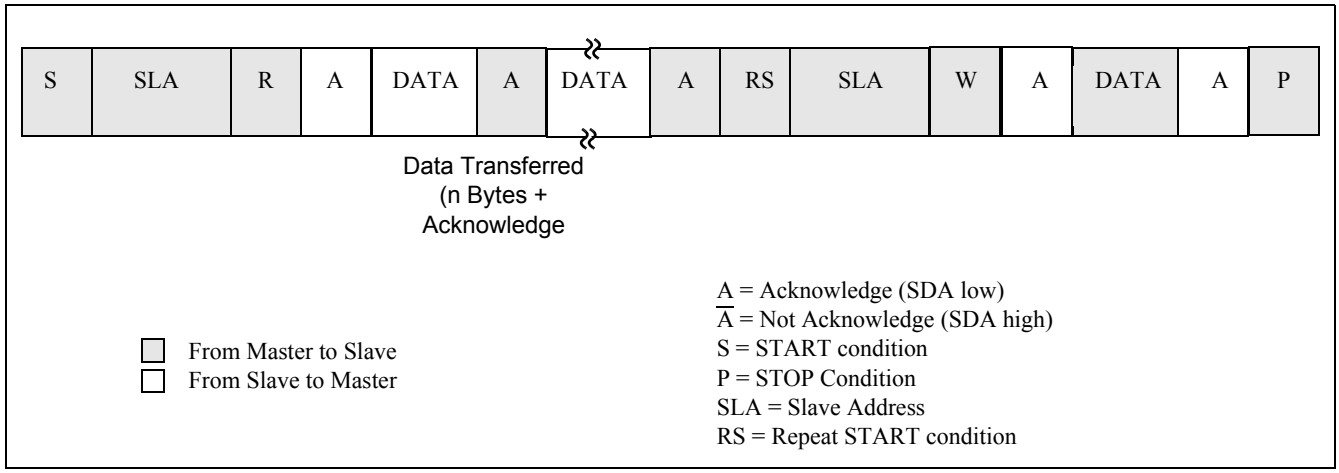

Figure 9: A Master Receiver switches to Master Transmitter after sending Repeated Start

Slave Receiver Mode

In the Slave Receiver Mode, data bytes are received from a master transmitter. To initialize the Slave Receiver Mode, the user should write the slave address to the Slave Address Register (I2ADR) and the I2C Control Register (I2CON) should be configured as follows:

	7	6	5	4	3	2	1	0
I2CON (D8h)	-	I2EN	STA	STO	SI	AA	-	CRSEL
	-	1	0	0	0	1	-	-

Figure 10-10: I2C Control register

CRSEL is not used for slave mode. I2EN must be set = 1 to enable I2C function. AA bit must be set = 1 to acknowledge its own slave address or the general call address. STA, STO and SI are cleared to 0.

After I2ADR and I2CON are initialized, the interface waits until it is addressed by its own address or general address followed by the data direction bit which is 0(W). If the direction bit is 1(R), it will enter Slave Transmitter Mode. After the address and the direction bit have been received, the SI bit is set and a valid status code can be read from the Status Register(I2STAT). Refer to Table 4 for the status codes and actions.

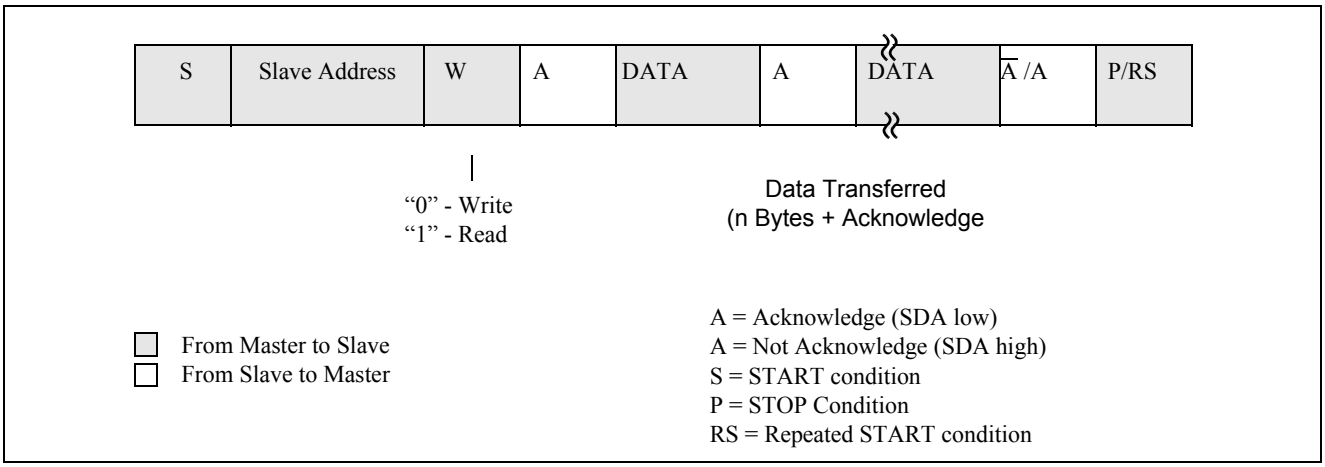

Figure 11: Format of Slave Receiver Mode

Slave Transmitter Mode

The first byte is received and handled as in the Slave Receiver Mode. However, in this mode, the direction bit will indicate that the transfer direction is reversed. Serial data is transmitted via P1.3/SDA while the serial clock is input through P1.2/SCL. START and STOP conditions are recognized as the beginning and end of a serial transfer. In a given application, I2C may operate as a master and as a slave. In the slave mode, the I2C hardware looks for its own slave address and the general call address. If one of these addresses is detected, an interrupt is requested. When the microcontrollers wishes to become the bus master, the hardware waits until the bus is free before the master mode is entered so that a possible slave action is not interrupted. If bus arbitration is lost in the master mode, I2C switches to the slave mode immediately and can detect its own slave address in the same serial transfer.

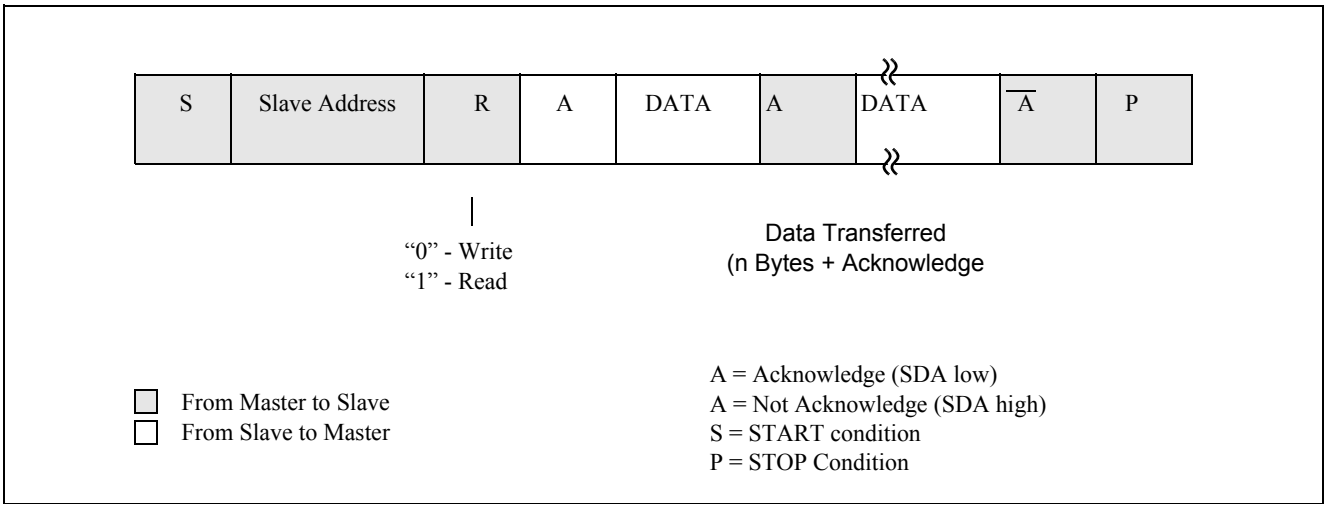

Figure 12: Format of Slave Transmitter Mode

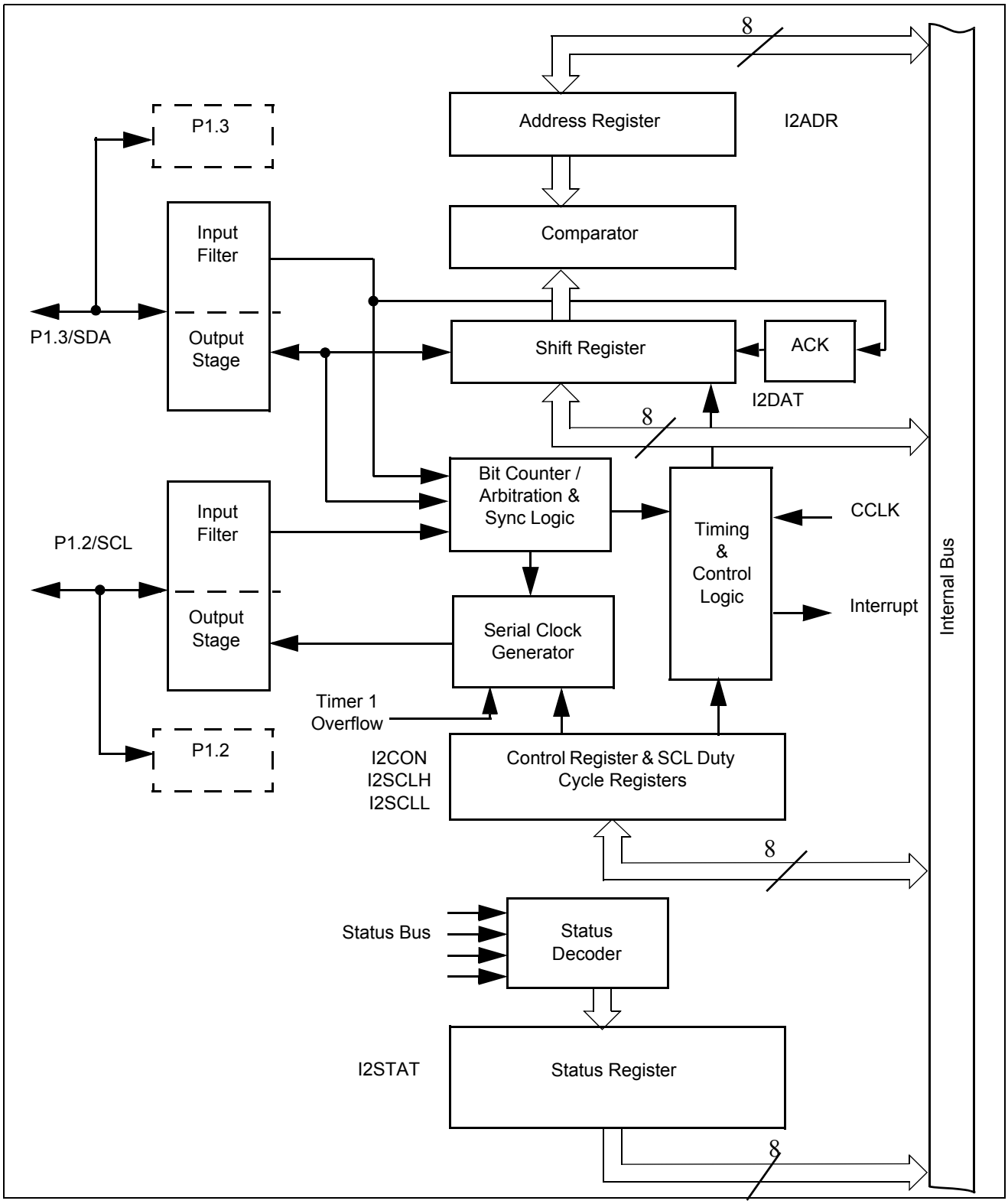

Figure 13: I2C-bus serial interface block diagram

Table 2: Master Transmitter Mode

Status code (I2STAT)	Status of the I2C-bus hardware	Application software response					Next action taken by I2C hardware
		to/from I2DAT	to I2CON				
			STA	STO	SI	AA	
08H	A START condition has been transmitted	Load SLA+W	x	0	0	x	SLA+W will be transmitted; ACK bit will be received
10H	A repeat START condition has been transmitted	Load SLA+W or Load SLA+R	x	0	0	x	As above;SLA+W will be transmitted; I2C switches to Master Receiver Mode
18h	SLA+W has been transmitted; ACK has been received	Load data byte or	0	0	0	x	Data byte will be transmitted; ACK bit will be received
		no I2DAT action or	1	0	0	x	Repeated START will be transmitted;
		no I2DAT action or	0	1	0	x	STOP condition will be transmitted; STO flag will be reset
		no I2DAT action	1	1	0	x	STOP condition followed by a START condition will be transmitted; STO flag will be reset.
20h	SLA+W has been transmitted;NOT-ACK has been received	Load data byte or	0	0	0	x	Data byte will be transmitted;ACK bit will be received
		no I2DAT action or	1	0	0	x	Repeated START will be transmitted;
		no I2DAT action or	0	1	0	x	STOP condition will be transmitted; STO flag will be reset
		no I2DAT action	1	1	0	x	STOP condition followed by a START condition will be transmitted; STO flag will be reset
28h	Data byte in I2DAT has been transmitted; ACK has been received	Load data byte or	0	0	0	x	Data byte will be transmitted; ACK bit will be received
		no I2DAT action or	1	0	0	x	Repeated START will be transmitted;
		no I2DAT action or	0	1	0	x	STOP condition will be transmitted; STO flag will be reset
		no I2DAT action	1	1	0	x	STOP condition followed by a START condition will be transmitted; STO flag will be reset

Table 2: Master Transmitter Mode(Continued)

Status code (I2STAT)	Status of the I2C-bus hardware	Application software response					Next action taken by I2C hardware
		to/from I2DAT	to I2CON				
			STA	STO	SI	AA	
30h	Data byte in I2DAT has been transmitted,NOT ACK hasbeen received	Load data byte or	0	0	0	x	Data byte will be transmitted; ACK bit will be received
		no I2DAT action or	1	0	0	x	Repeated START will be transmitted;
		no I2DAT action or	0	1	0	x	STOP condition will be transmitted; STO flag will be reset
		no I2DAT action	1	1	0	x	STOP condition followed by a START condition will be transmitted. STO flag will be reset.
38H	Arbitration lost in SLA+R/W or data bytes	No I2DAT action or	0	0	0	x	I2C-bus will be released; not addressed slave will be entered
		No I2DAT action	1	0	0	x	A START condition will be transmitted when the bus becomes free.

Table 3: Master Receiver Mode

Status code (I2STAT)	Status of the I2C-bus hardware	Application software response					Next action taken by I2C hardware
		to/from I2DAT	to I2CON				
			STA	STO	SI	AA	
08H	A START condition has been transmitted	Load SLA+R	x	0	0	x	SLA+R will be transmitted; ACK bit will be received
10H	A repeat STARTcondition has been transmitted	Load SLA+R or	X	0	0	x	As above
		Load SLA+W	x	0	0	x	SLA+W will be transmitted; I2C will be switches to Master Transmitter Mode
38H	Arbitration lost in NOT ACK bit	no I2DAT action or	0	0	0	x	I2C will be released; it will enter a slave mode
		no I2DAT action	1	0	0	x	A START condition will be transmitted when the bus becomes free
40h	SLA+R has been transmitted;ACK has been received	no I2DAT action or	0	0	0	0	Data byte will be received; NOT ACK bit will be returned
		no I2DAT action or	0	0	0	1	Data byte will be received; ACK bit will be returned

Table 3: Master Receiver Mode(Continued)

Status code (I2STAT)	Status of the I2C-bus hardware	Application software response					Next action taken by I2C hardware
		to/from I2DAT	to I2CON				
			STA	STO	SI	AA	
48h	SLA+R has been transmitted; NOT ACK has been received	No I2DAT action or	1	0	0	x	Repeated START will be transmitted;
		no I2DAT action or	0	1	0	x	STOP condition will be transmitted; STO flag will be reset
		no I2DAT action or	1	1	0	x	STOP condition followed by a START condition will be transmitted; STO flag will be reset
50h	Data byte has been received; ACK has been returned	Read data byte	0	0	0	0	Data byte will be received; NOT ACK bit will be returned
		read data byte	0	0	0	1	Data byte will be received; ACK bit will be returned
58h	Data byte has been received; NACK has been returned	Read data byte or	1	0	0	x	Repeated START will be transmitted;
		read data byte or	0	1	0	x	STOP condition will be transmitted; STO flag will be reset
		read data byte	1	1	0	x	STOP condition followed by a START condition will be transmitted; STO flag will be reset

Table 4: Slave Receiver Mode

Status code (I2STAT)	Status of the I2C-bus hardware	Application software response					Next action taken by I2C hardware
		to/from I2DAT	to I2CON				
			STA	STO	SI	AA	
60H	Own SLA+W has been received; ACK has been received	no I2DAT action or	x	0	0	0	Data byte will be received and NOT ACK will be returned
		no I2DAT action	x	0	0	1	Data byte will be received and ACK will be returned
68H	Arbitration lost in SLA+R/Was master;Own SLA+W has been received, ACK returned	No I2DAT action or	x	0	0	0	Data byte will be received and NOT ACK will be returned
		no I2DAT action	x	0	0	1	Data byte will be received and ACK will be returned
70H	General call address(00H) has beenreceived, ACK has been returned	No I2DAT action or	x	0	0	0	Data byte will be received and NOT ACK will be returned
		no I2DAT action	x	0	0	1	Data byte will be received and ACK will be returned

Table 4: Slave Receiver Mode(Continued)

Status code (I2STAT)	Status of the I2C-bus hardware	Application software response					Next action taken by I2C hardware
		to/from I2DAT	to I2CON				
			STA	STO	SI	AA	
78H	Arbitration lost in SLA+R/W as master; General call addresshas been received, ACK bit has been returned	no I2DAT action or	x	0	0	0	Data byte will be received and NOT ACK will be returned
		no I2DAT action	x	0	0	1	Data byte will be received and ACK will be returned
80H	Previously addressed with own SLA address; Data has been received; ACK has been returned	Read data byte or	x	0	0	0	Data byte will be received and NOT ACK will be returned
		read data byte	x	0	0	1	Data byte will be received; ACK bit will be returned
88H	Previously addressed with own SLA address; Data has been received; NACK has been returned	Read data byte or	0	0	0	0	Switched to not addressed SLA mode; no recognition of own SLA or general address
		read data byte or	0	0	0	1	Switched to not addressed SLA mode; Own SLA will be recognized; general call address will be recognized if I2ADR.0=1
		read data byte or	1	0	0	0	Switched to not addressed SLA mode; no recognition of own SLA or General call address. A START condition will be transmitted when the bus becomes free
		read data byte	1	0	0	1	Switched to not addressed SLA mode; Own slave address will be recognized; General call address will be recognized if I2ADR.0=1. A START condition will be transmitted when the bus becomes free.
90H	Previously addressed with General call; Datahas been received; ACK has been returned	Read data byte or	x	0	0	0	Data byte will be received and NOT ACK will be returned
		read data byte	x	0	0	1	Data byte will be received and ACK will be returned

Table 4: Slave Receiver Mode(Continued)

Status code (I2STAT)	Status of the I2C-bus hardware	Application software response					Next action taken by I2C hardware
		to/from I2DAT	to I2CON				
			STA	STO	SI	AA	
98H	Previously addressed with General call; Data has been received; NACK has been returned	Read data byte	0	0	0	0	Switched to not addressed SLA mode; no recognition of own SLA or General call address
		read data byte	0	0	0	1	Switched to not addressed SLA mode; Own slave address will be recognized; General call address will be recognized if I2ADR.0=1.
		read data byte	1	0	0	0	Switched to not addressed SLA mode; no recognition of own SLA or General call address. A START condition will be transmitted when the bus becomes free.
		read data byte	1	0	0	1	Switched to not addressed SLA mode; Own slave address will be recognized; General call address will be recognized if I2ADR.0=1. A START condition will be transmitted when the bus becomes free.
A0H	A STOP condition or repeated START condition has been received while still addressed as SLA/ REC or SLA/TRX	No I2DAT action	0	0	0	0	Switched to not addressed SLA mode; no recognition of own SLA or General call address
		no I2DAT action	0	0	0	1	Switched to not addressed SLA mode; Own slave address will be recognized; General call address will be recognized if I2ADR.0=1.
		no I2DAT action	1	0	0	0	Switched to not addressed SLA mode; no recognition of own SLA or General call address. A START condition will be transmitted when the bus becomes free.
		no I2DAT action	1	0	0	1	Switched to not addressed SLA mode; Own slave address will be recognized; General call address will be recognized if I2ADR.0=1. A START condition will be transmitted when the bus becomes free.

Table 5: Slave Transmitter Mode

Status code (I2STAT)	Status of the I2C-bus hardware	Application software response					Next action taken by I2C hardware
		to/from I2DAT	to I2CON				
			STA	STO	SI	AA	
A8h	Own SLA+R has been received; ACK has been returned	Load data byte or	x	0	0	0	Last data byte will be transmitted and ACK bit will be received
		load data byte	x	0	0	1	Data byte will be transmitted; ACK will be received
B0h	Arbitration lost in SLA+R/W as master; Own SLA+R has been received, ACK has been returned	Load data byte or	x	0	0	0	Last data byte will be transmitted and ACK bit will be received
		load data byte	x	0	0	1	Data byte will be transmitted; ACK bit will be received
B8H	Data byte in I2DAT has been transmitted; ACK has been received	Load data byte or	x	0	0	0	Last data byte will be transmitted and ACK bit will be received
		load data byte	x	0	0	1	Data byte will be transmitted; ACK will be received
C0H	Data byte in I2DAT has been transmitted; NACK has been received	No I2DAT action or	0	0	0	0	Switched to not addressed SLA mode; no recognition of own SLA or General call address.
		no I2DAT action or	0	0	0	1	Switched to not addressed SLA mode; Own slave address will be recognized; General call address will be recognized if I2ADR.0=1.
		no I2DAT action or	1	0	0	0	Switched to not addressed SLA mode; no recognition of own SLA or General call address. A START condition will be transmitted when the bus becomes free.
		no I2DAT action	1	0	0	1	Switched to not addressed SLA mode; Own slave address will be recognized; General call address will be recognized if I2ADR.0=1. A START condition will be transmitted when the bus becomes free.

Table 5: Slave Transmitter Mode(Continued)

Status code (I2STAT)	Status of the I2C-bus hardware	Application software response					Next action taken by I2C hardware
		to/from I2DAT	to I2CON				
			STA	STO	SI	AA	
C8H	Last data byte in I2DAT has been transmitted(AA=0); ACK has been received	No I2DAT action or	0	0	0	0	Switched to not addressed SLA mode; no recognition of own SLA or General call address.
		no I2DAT action or	0	0	0	1	Switched to not addressed SLA mode; Own slave address will be recognized; General call address will be recognized if I2ADR.0=1.
		no I2DAT action or	1	0	0	0	Switched to not addressed SLA mode; no recognition of own SLA or General call address. A START condition will be transmitted when the bus becomes free.
		no I2DAT action	1	0	0	1	Switched to not addressed SLA mode; Own slave address will be recognized; General call address will be recognized if I2ADR.0=1. A START condition will be transmitted when the bus becomes free.

For more information about the I2C interface, please refer to the I2C specification.

11. ANALOG COMPARATORS

Two analog comparators are provided on the **P89LPC920/921/922**. Input and output options allow use of the comparators in a number of different configurations. Comparator operation is such that the output is a logical one (which may be read in a register and/or routed to a pin) when the positive input (one of two selectable pins) is greater than the negative input (selectable from a pin or an internal reference voltage). Otherwise the output is a zero. Each comparator may be configured to cause an interrupt when the output value changes.

Comparator configuration

Each comparator has a control register, CMP1 for comparator 1 and CMP2 for comparator 2. The control registers are identical and are shown in Figure 11-1.

The overall connections to both comparators are shown in Figure 11-2. There are eight possible configurations for each comparator, as determined by the control bits in the corresponding CMPn register: CPn, CNn, and OEn. These configurations are shown in Figure 11-3.

When each comparator is first enabled, the comparator output and interrupt flag are not guaranteed to be stable for 10 microseconds. The corresponding comparator interrupt should not be enabled during that time, and the comparator interrupt flag must be cleared before the interrupt is enabled in order to prevent an immediate interrupt service.

CMPn

Address: ACh (CMP1), ADh (CMP2)

Not bit addressable

Reset Source(s): Any reset

Reset Value: xx000000B

7	6	5	4	3	2	1	0
-	-	CEn	CPn	CNn	OEn	COn	CMFn

BIT	SYMBOL	FUNCTION
CMPn.7, 6	-	Reserved for future use. Should not be set to 1 by user programs.
CMPn.5	CEn	Comparator enable. When set, the corresponding comparator function is enabled. Comparator output is stable 10 microseconds after CEn is set.
CMPn.4	CPn	Comparator positive input select. When 0, CINnA is selected as the positive comparator input. When 1, CINnB is selected as the positive comparator input.
CMPn.3	CNn	Comparator negative input select. When 0, the comparator reference pin CMPREF is selected as the negative comparator input. When 1, the internal comparator reference, Vref, is selected as the negative comparator input.
CMPn.2	OEn	Output enable. When 1, the comparator output is connected to the CMPn pin if the comparator is enabled (CEn = 1). This output is asynchronous to the CPU clock.
CMPn.1	COn	Comparator output, synchronized to the CPU clock to allow reading by software.
CMPn.0	CMFn	Comparator interrupt flag. This bit is set by hardware whenever the comparator output COn changes state. This bit will cause a hardware interrupt if enabled. Cleared by software.

Figure 11-1: Comparator control registers (CMP1 and CMP2)

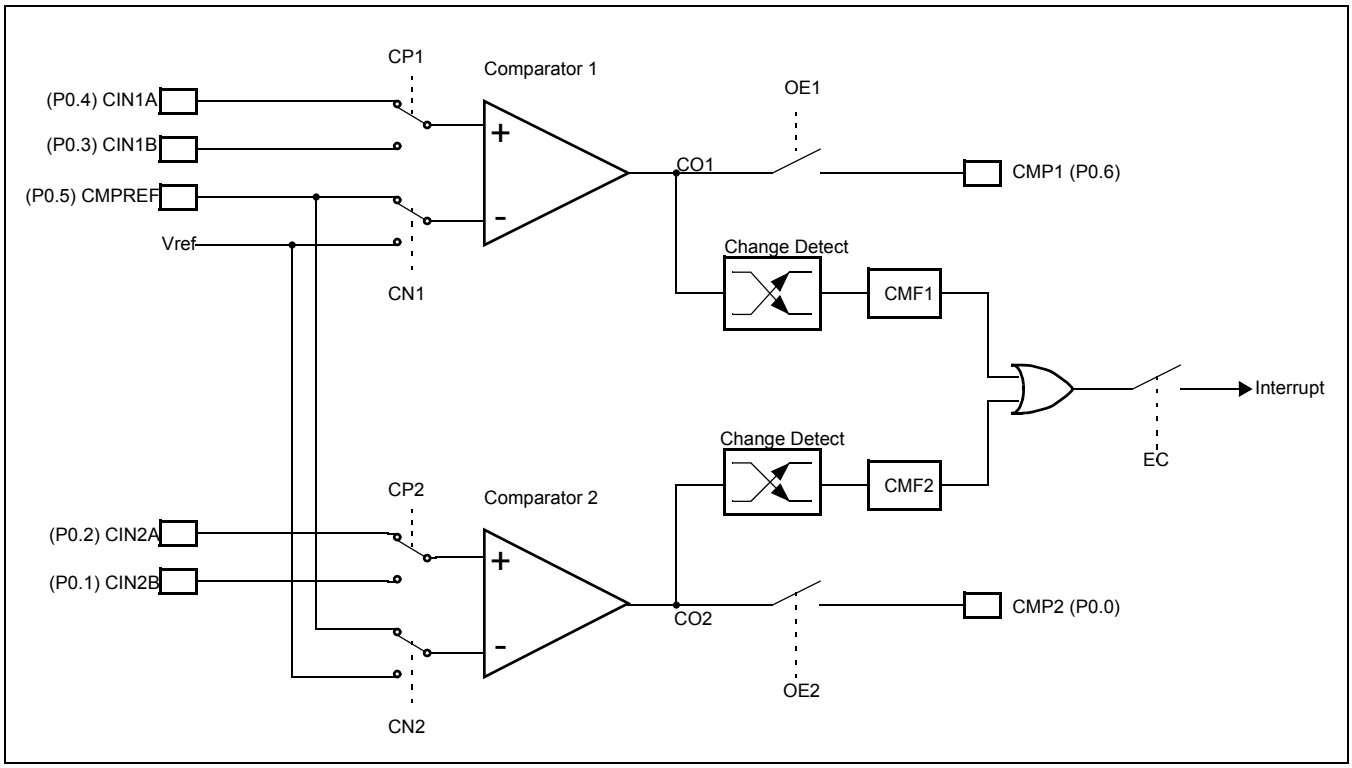

Figure 11-2: Comparator input and output connections

Internal reference voltage

An internal reference voltage, Vref, may supply a default reference when a single comparator input pin is used. Please refer to the Datasheet for specifications.

Comparator interrupt

Each comparator has an interrupt flag CMFn contained in its configuration register. This flag is set whenever the comparator output changes state. The flag may be polled by software or may be used to generate an interrupt. The two comparators use one common interrupt vector. The interrupt will be generated when the interrupt enable bit EC in the IEN1 register is set and the interrupt system is enabled via the EA bit in the IEN0 register. If both comparators enable interrupts, after entering the interrupt service routine, the user will need to read the flags to determine which comparator caused the interrupt.

When a comparator is disabled the comparator's output, COx, goes high. If the comparator output was low and then is disabled, the resulting transition of the comparator output from a low to high state will set the the comparator flag, CMFx. This will cause an interrupt if the comparator interrupt is enabled. The user should therefore disable the comparator interrupt prior to disabling the comparator. Additionally, the user should clear the comparator flag, CMFx, after disabling the comparator.

Comparators and power reduction modes

Either or both comparators may remain enabled when Power down or Idle mode is activated, but both comparators are disabled automatically in Total Power down mode.

If a comparator interrupt is enabled (except in Total Power down mode), a change of the comparator output state will generate an interrupt and wake up the processor. If the comparator output to a pin is enabled, the pin should be configured in the push-pull mode in order to obtain fast switching times while in Power down mode. The reason is that with the **oscillator** stopped, the temporary strong pull-up that normally occurs during switching on a quasi-bidirectional port pin does not take place.

ANALOG COMPARATORS

Comparators consume power in Power down and Idle modes, as well as in the normal operating mode. This should be taken into consideration when system power consumption is an issue. To minimize power consumption, the user can Power down the comparators by disabling the comparators and setting PCONA.5 to '1', or simply putting the device in Total Power down mode.

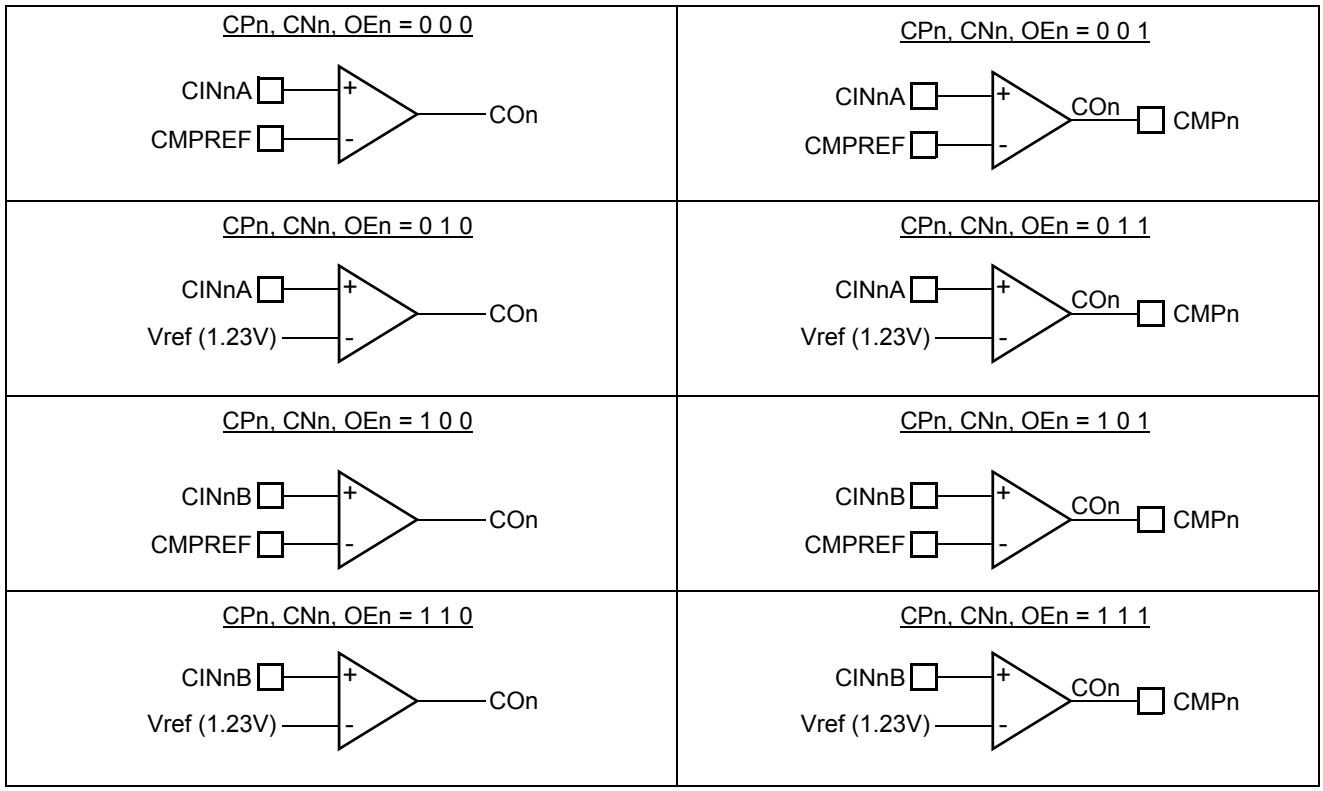

Figure 11-3: Comparator configurations

Comparator configuration example

The code shown below is an example of initializing one comparator. Comparator 1 is configured to use the CIN1A and CMPREF inputs, outputs the comparator result to the CMP1 pin, and generates an interrupt when the comparator output changes.

```
CMPINIT:
        MOV     PT0AD,#030h     ; Disable digital INPUTS on pins that are used for analog functions: CIN1A, CMPREF.
        ANL     P0M2,#0CFh      ; Disable digital OUTPUTS on pins that are used
        ORL     P0M1,#030h      ; for analog functions: CIN1A, CMPREF.
        MOV     CMP1,#024h      ; Turn on comparator 1 and set up for:
                                ; - Positive input on CIN1A.
                                ; - Negative input from CMPREF pin.
                                ; - Output to CMP1 pin enabled.
        CALL    delay10us       ; The comparator has to start up for at least 10 microseconds before use.
        ANL     CMP1,#0FEh      ; Clear comparator 1 interrupt flag.
        SETB    EC              ; Enable the comparator interrupt. The priority is left at the current value.
        SETB    EA              ; Enable the interrupt system (if needed).
```

```
        RET                     ; Return to caller.
```

The interrupt routine used for the comparator must clear the interrupt flag (CMF1 in this case) before returning.

12. KEYPAD INTERRUPT (KBI)

The Keypad Interrupt function is intended primarily to allow a single interrupt to be generated when Port 0 is equal to or not equal to a certain pattern. This function can be used for bus address recognition or keypad recognition. The user can configure the port via SFRs for different tasks.

There are three SFRs used for this function. The Keypad Interrupt Mask Register (KBMASK) is used to define which input pins connected to Port 0 are enabled to trigger the interrupt. The Keypad Pattern Register (KBPATN) is used to define a pattern that is compared to the value of Port 0. The Keypad Interrupt Flag (KBIF) in the Keypad Interrupt Control Register (KBCON) is set when the condition is matched while the Keypad Interrupt function is active. An interrupt will be generated if it has been enabled by setting the EKBI bit in IEN1 register and EA = 1. The PATN_SEL bit in the Keypad Interrupt Control Register (KBCON) is used to define equal or not-equal for the comparison.

In order to use the Keypad Interrupt as an original KBI function like in the 87LPC76x series, the user needs to set KBPATN = 0FFH and PATN_SEL = 0 (not equal), then any key connected to Port0 which is enabled by KBMASK register is will cause the hardware to set KBIF = 1 and generate an interrupt if it has been enabled. The interrupt may be used to wake up the CPU from Idle or Power down modes. This feature is particularly useful in handheld, battery powered systems that need to carefully manage power consumption yet also need to be convenient to use.

In order to set the flag and and cause an interrupt, the pattern on Port 0 must be held longer than 6 CCLKs.

KBPATN

Address: 93h

Not bit addressable

Reset Source(s): Any reset

Reset Value: 11111111B

7	6	5	4	3	2	1	0
KBPATN.7	KBPATN.6	KBPATN.5	KBPATN.4	KBPATN.3	KBPATN.2	KBPATN.1	KBPATN.0

BIT	SYMBOL	FUNCTION
KBPATN.7-0	-	Pattern bit 7 - bit 0

Figure 12-1: Keypad Pattern register

KBCON

Address: 94h

Not bit addressable

Reset Source(s): Any reset

Reset Value: xxxxxx00B

7	6	5	4	3	2	1	0
-	-	-	-	-	-	PATN_SEL	KBIF

BIT	SYMBOL	FUNCTION
KBCON.7-2	-	Reserved
KBCON.1	PATN_SEL	Pattern Matching Polarity selection. When set, Port 0 has to be equal to the user-defined Pattern in KBPATN to generate the interrupt. When clear, Port 0 has to be not equal to the value of KBPATN register to generate the interrupt.
KBCON.0	KBIF	Keypad Interrupt Flag. Set when Port 0 matches user defined conditions specified in KBPATN, KBMASK, and PATN_SEL. Needs to be cleared by software by writing "0".

Figure 12-2: Keypad Control register

KBMASK

Address: 86h

Not bit addressable

Reset Source(s): Any reset

Reset Value: 00000000B

7	6	5	4	3	2	1	0
KBMASK.7	KBMASK.6	KBMASK.5	KBMASK.4	KBMASK.3	KBMASK.2	KBMASK.1	KBMASK.0

BIT	SYMBOL	FUNCTION
KBMASK.7	-	When set, enables P0.7 as a cause of a Keypad Interrupt.
KBMASK.6	-	When set, enables P0.6 as a cause of a Keypad Interrupt.
KBMASK.5	-	When set, enables P0.5 as a cause of a Keypad Interrupt.
KBMASK.4	-	When set, enables P0.4 as a cause of a Keypad Interrupt.
KBMASK.3	-	When set, enables P0.3 as a cause of a Keypad Interrupt.
KBMASK.2	-	When set, enables P0.2 as a cause of a Keypad Interrupt.
KBMASK.1	-	When set, enables P0.1 as a cause of a Keypad Interrupt.
KBMASK.0	-	When set, enables P0.0 as a cause of a Keypad Interrupt.

Note: the Keypad Interrupt must be enabled in order for the settings of the KBMASK register to be effective.

Figure 12-3: Keypad Interrupt Mask register (KBM)

13. WATCHDOG TIMER

The watchdog timer subsystem protects the system from incorrect code execution by causing a system reset when it underflows as a result of a failure of software to feed the timer prior to the timer reaching its terminal count. The watchdog timer can only be reset by a power-on reset.

Watchdog Function

The user has the ability using the WDCON and UCFG1 registers to control the run /stop condition of the WDT, the clock source for the WDT, the prescaler value, and whether the WDT is enabled to reset the device on underflow. In addition, there is a safety mechanism which forces the WDT to be enabled by values programmed into UCFG1 either through IAP or a commercial programmer.

The WDTE bit (UCFG1.7), if set, enables the WDT to reset the device on underflow. Following reset, the WDT will be running regardless of the state of the WDTE bit.

The WDRUN bit (WDCON.2) can be set to start the WDT and cleared to stop the WDT. Following reset this bit will be set and the WDT will be running. All writes to WDCON need to be followed by a feed sequence (see section "Feed Sequence" on page 86). Additional bits in WDCON allow the user to select the clocksource for the WDT and the prescaler.

When the timer is not enabled to reset the device on underflow, the WDT can be used in "timer mode" and be enabled to produce an interrupt (IEN0.6) if desired.

The Watchdog Safety Enable bit, WDSE (UCFG1.4) along with WDTE, is designed to force certain operating conditions at power-up. Refer to the Table 13-1 for details

Table 13-1: Watchdog timer configuration.

WDTE (UCFG1.7)	WDSE (UCFG1.4)	FUNCTION
0	x	The watchdog reset is disabled. The timer can be used as an internal timer and can be used to generate an interrupt. WDSE has no effect.
1	0	The watchdog reset is enabled. The user can set WDCLK to choose the clock source.
1	1	The watchdog reset is enabled, along with additional safety features: 1. WDCLK is forced to 1 (using watchdog oscillator) 2. WDCON and WDL register can only be written once 3. WDRUN is forced to 1

Figure 13-3 shows the watchdog timer in watchdog mode. It consists of a programmable 13-bit prescaler, and an 8-bit down counter. The down counter is clocked (decremented) by a tap taken from the prescaler. The clock source for the prescaler is either PCLK or the watchdog oscillator selected by the WDCLK bit in the WDCON register. (Note that switching of the clock sources will not take effect immediately - see section "Watchdog Clock Source" on page 88).

The watchdog asserts the watchdog reset when the watchdog count underflows and the watchdog reset is enabled. When the watchdog reset is enabled, writing to WDL or WDCON must be followed by a feed sequence for the new values to take effect.

If a watchdog reset occurs, the internal reset is active for at least one watchdog clock cycle (PCLK or the watchdog oscillator clock). If CCLK is still running, code execution will begin immediately after the reset cycle. If the processor was in Power down mode, the watchdog reset will start the oscillator and code execution will resume after the oscillator is stable.

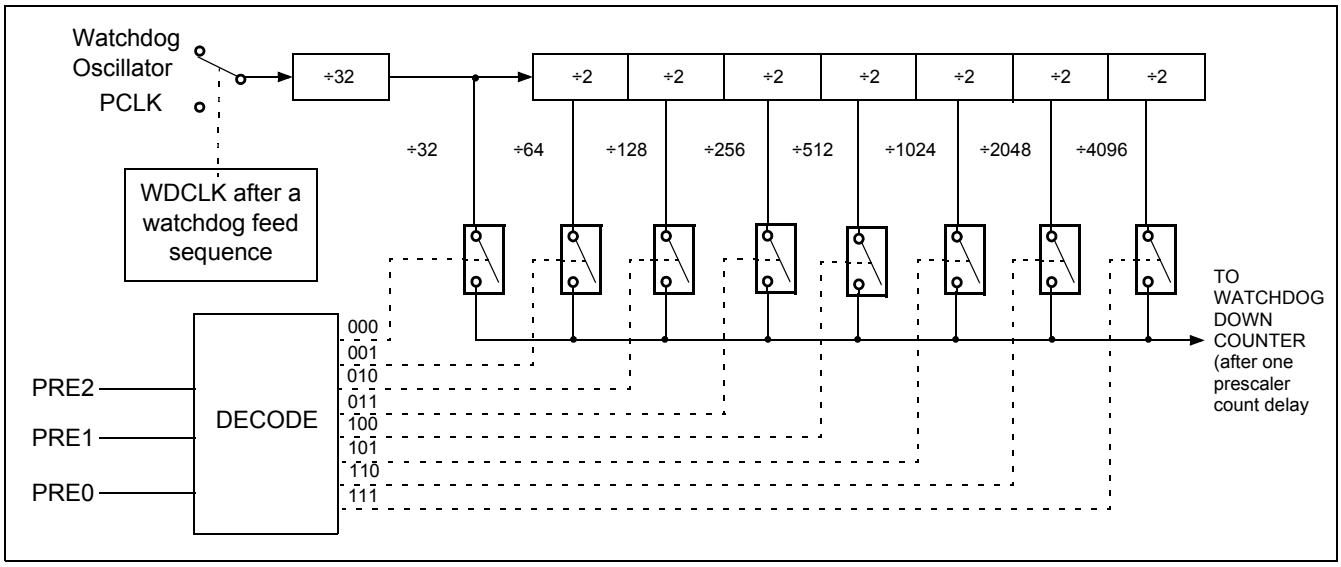

Figure 13-1: Watchdog Prescaler

Feed Sequence

The watchdog timer control register and the 8-bit down counter (Figure 13-3) are not directly loaded by the user. The user writes to the WDCON and the WDL SFRs. At the end of a feed sequence, the values in the WDCON and WDL SFRs are loaded to the control register and the 8-bit down counter. Before the feed sequence, any new values written to these two SFRs will not take effect. To avoid a watchdog reset, the watchdog timer needs to be fed (via a special sequence of software action called the feed sequence) prior to reaching an underflow.

To feed the watchdog, two write instructions must be sequentially executed successfully. Between the two write instructions, SFR reads are allowed, but writes are not allowed. The instructions should move A5H to the WFEED1 register and then 5AH to the WFEED2 register. An incorrect feed sequence will cause an immediate watchdog reset. The program sequence to feed the watchdog timer is as follows:

```
CLR     EA              ; disable interrupt
MOV     WFEED1,#0A5h    ; do watchdog feed part 1
MOV     WFEED2,#05Ah    ; do watchdog feed part 2
SETB    EA              ; enable interrupt
```

This sequence assumes that the P89LPC901/902/903 interrupt system is enabled and there is a possibility of an interrupt request occuring during the feed sequence. If an interrupt was allowed to be serviced and the service routine contained any SFR writes, it would trigger a watchdog reset. If it is known that no interrupt could occur during the feed sequence, the instructions to disable and re-enable interrupts may be removed.

In watchdog mode (WDTE = 1), writing the WDCON register must be IMMEDIATELY followed by a feed sequence to load the WDL to the 8-bit down counter, and the WDCON to the shadow register. If writing to the WDCON register is not immediately followed by the feed sequence, a watchdog reset will occur.

For example: setting WDRUN = 1:

```
MOV     ACC,WDCON       ; get WDCON
SETB    ACC.2           ; set WD_RUN=1
MOV     WDL,#0FFh       ; New count to be loaded to 8-bit down counter
CLR     EA              ; disable interrupt
MOV     WDCON,ACC       ; write back to WDCON (after the watchdog is enabled, a feed must occur
                        ; immediately)
```

```
MOV     WFEED1,#0A5h        ; do watchdog feed part 1
MOV     WFEED2,#05Ah        ; do watchdog feed part 2
SETB    EA                  ; enable interrupt
```

In timer mode (WDTE = 0), WDCON is loaded to the control register every CCLK cycle (no feed sequence is required to load the control register), but a feed sequence **is required** to load from the WDL SFR to the 8-bit down counter before a time-out occurs.

WDCON

Address: A7h

7	6	5	4	3	2	1	0
PRE2	PRE1	PRE0	-	-	WDRUN	WDTOF	WDCLK

Not bit addressable

Reset Source(s): See reset value below

Reset Value: 111xx1?1B (Note: WDCON.7,6,5,2,0 - set to '1' any reset; WDCON.1 - cleared to '0' on Power-on reset, set to '1' on watchdog reset, not affected by any other reset)

BIT	SYMBOL	FUNCTION
WDCON.7-5	PRE2-PRE0	Clock Prescaler Tap Select. Refer to Table 13-2 for details.
WDCON.4-3	-	Reserved for future use. Should not be set to 1 by user program.
WDCON.2	WDRUN	Watchdog Run Control. The watchdog timer is started when WDRUN = 1 and stopped when WDRUN = 0. This bit is forced to 1 (watchdog running) and cannot be cleared to zero if both WDTE and WDSE are set to 1.
WDCON.1	WDTOF	Watchdog Timer Time-Out Flag. This bit is set when the 8-bit down counter underflows. In watchdog mode, a feed sequence will clear this bit. It can also be cleared by writing '0' to this bit in software.
WDCON.0	WDCLK	Watchdog input clock select. When set, the watchdog oscillator is selected. When cleared, PCLK is selected. (If the CPU is powered down, the watchdog is disabled if WDCLK = 0, see section "Power down operation"). (Note: If both WDTE and WDSE are set to 1, this bit is forced to 1.) Refer to section "Watchdog Clock Source" on page 88 for details.

Figure 13-2: Watchdog Timer Control Register

The number of watchdog clocks before timing out is calculated by the following equations:

$$tclks = (2^{(5+PRE)})(WDL+1)+1$$

where:

- PRE is the value of prescaler (PRE2-PRE0) which can be the range 0-7, and;
- WDL is the value of watchdog load register which can be the range of 0-255.

The minimum number of tclks is:

$$tclks = (2^{(5+0)})(0+1)+1 = 33$$

The maximum number of tclks is:

$$tclks = (2^{(5+7)})(255+1)+1 = 1{,}048{,}577T$$

The following table show sample **P89LPC920/921/922** timeout values

Table 13-2: P89LPC920/921/922 Watchdog Timeout Values.

PRE2-PRE0	WDL in decimal)	Timeout Period (in watchdog clock cycles)	Watchdog Clock Source	
			400KHz Watchdog Oscillator Clock (Nominal)	12MHz CCLK (6MHz CCLK/2 Watchdog Clock)
000	0	33	82.5µs	5.50µs
	255	8,193	20.5ms	1.37ms
001	0	65	162.5µs	10.8µs
	255	16,385	41.0ms	2.73ms
010	0	129	322.5µs	21.5µs
	255	32,769	81.9ms	5.46ms
011	0	257	642.5µs	42.8µs
	255	65,537	163.8ms	10.9ms
100	0	513	.1.28ms	85.5µs
	255	131,073	327.7ms	21.8ms
101	0	1,025	2.56ms	170.8µs
	255	262,145	655.4ms	43.7ms
110	0	2,049	5.12ms	341.5µs
	255	524,289	1.31s	87.4ms
111	0	4097	10.2ms	682.8µs
	255	1,048,577	2.62s	174.8ms

Watchdog Clock Source

The watchdog timer system has an on-chip 400KHz oscillator. The watchdog timer can be clocked from either the watchdog oscillator or from PCLK (refer to Figure 13-1) by configuring the WDCLK bit in the Watchdog Control Register WDCON. When the watchdog feature is enabled, the timer must be fed regularly by software in order to prevent it from resetting the CPU.

After changing WDCLK (WDCON.0), switching of the clock source will not immediately take effect. As shown in Figure 13-3, the selection is loaded after a watchdog feed sequence. In addition, due to clock synchronization logic, it can take two old clock cycles before the old clock source is deselected, and then an additional two new clock cycles before the new clock source is selected.

Since the prescaler starts counting immediately after a feed, switching clocks can cause some inaccuracy in the prescaler count. The inaccuracy could be as much as 2 old clock source counts plus 2 new clock cycles.

Note: When switching clocks, it is important that the old clock source is left enabled for 2 clock cycles after the feed completes. Otherwise, the watchdog may become disabled when the old clock source is disabled. For example, suppose PCLK (WCLK=0) is the current clock source. After WCLK is set to '1', the program should wait at least two PCLK cycles (4 CCLKs) after the feed completes before going into Power down mode. Otherwise, the watchdog could become disabled when CCLK turns off. The watchdog oscillator will never become selected as the clock source unless CCLK is turned on again first.

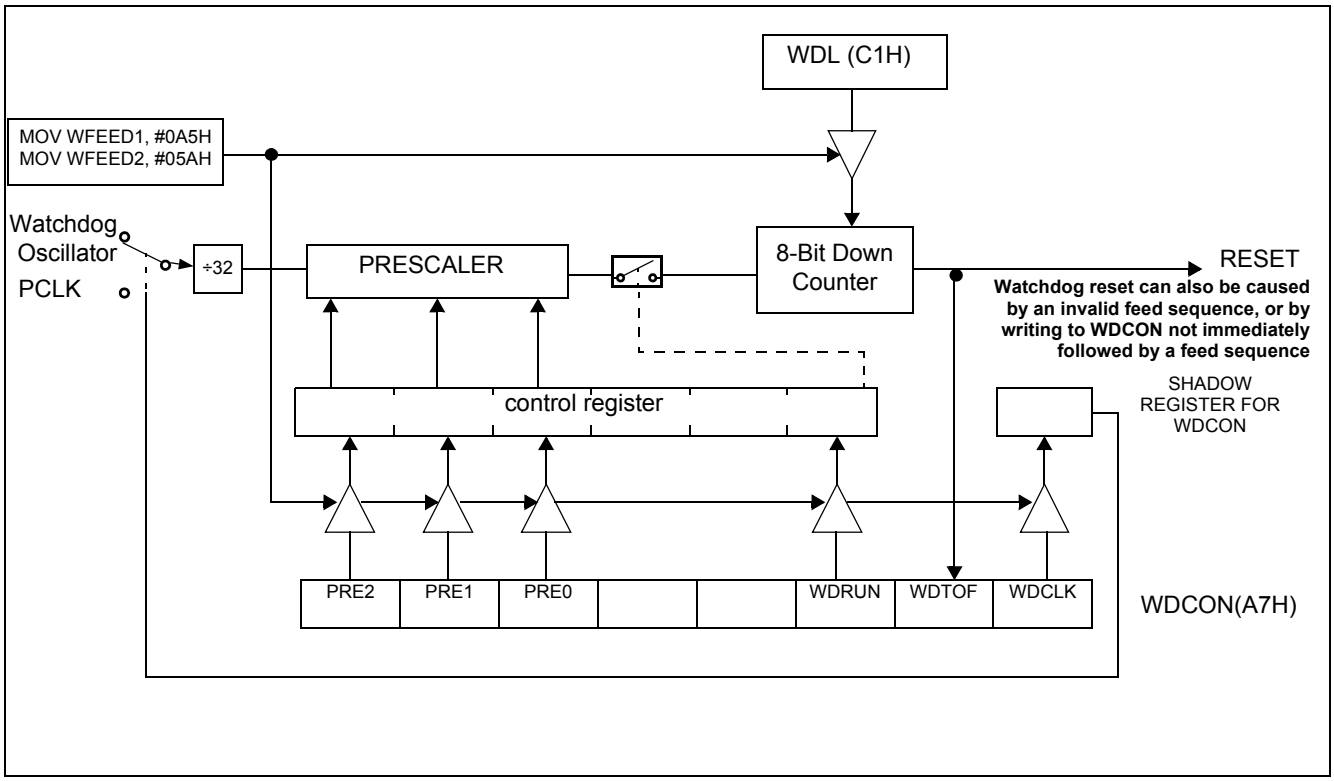

Figure 13-3: Watchdog Timer in Watchdog Mode (WDTE = 1)

Watchdog Timer in Timer Mode

Figure 13-4 shows the Watchdog Timer in Timer Mode. In this mode, any changes to WDCON are written to the shadow register after one watchdog clock cycle. A watchdog underflow will set the WDTOF bit. If IEN0.6 is set, the watchdog underflow is enabled to cause an interrupt. WDTOF is cleared by writing a '0' to this bit in software. When an underflow occurs, the contents of WDL is reloaded into the down counter and the watchdog timer immediately begins to count down again.

A feed is necessary to cause WDL to be loaded into the down counter before an underflow occurs. Incorrect feeds are ignored in this mode.

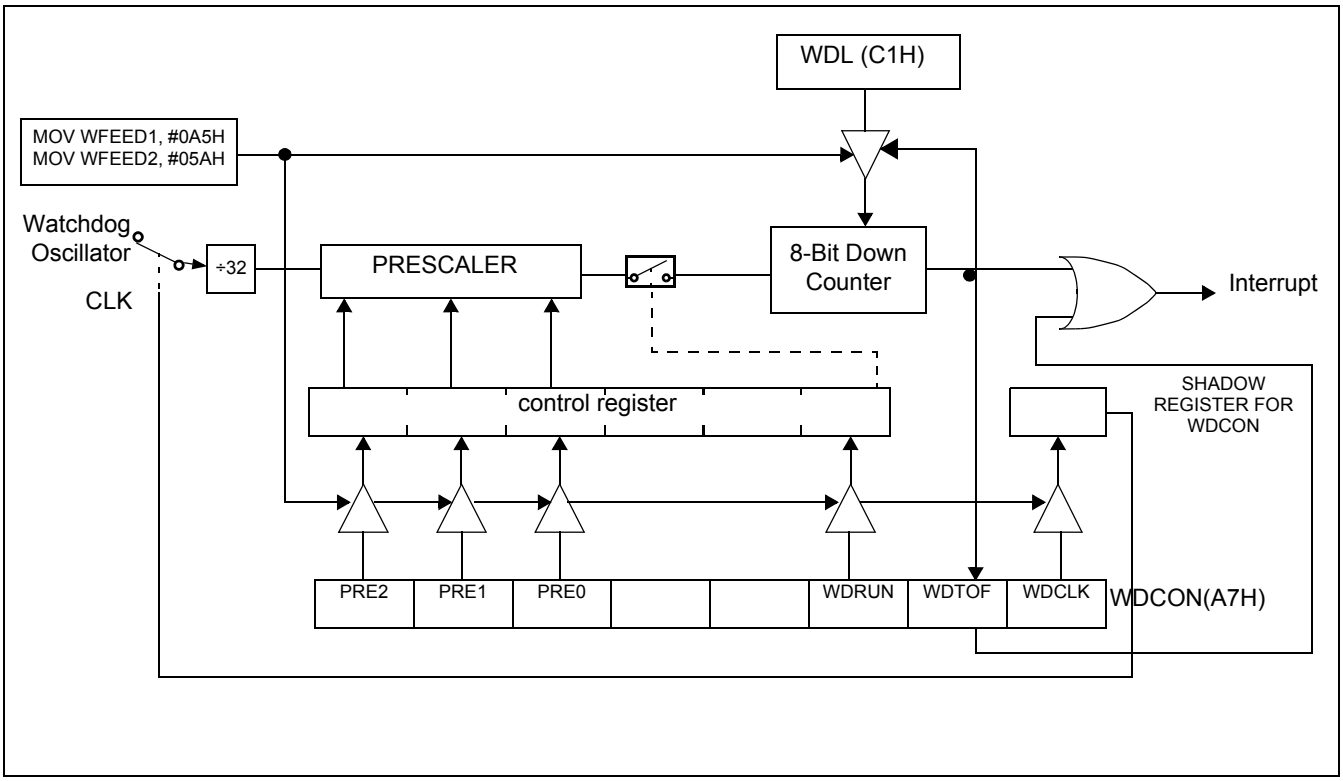

Figure 13-4: Watchdog Timer in Timer Mode (WDTE = 0)

Power down operation

The WDT oscillator will continue to run in power down, consuming approximately 50uA, as long as the WDT oscillator is selected as the clock source for the WDT. Selecting PCLK as the WDT source will result in the WDT oscillator going into power down with the rest of the device (see section "Watchdog Clock Source" on page 88). Power down mode will also prevent PCLK from running and therefore the watchdog is effectively disabled.

Periodic wakeup from Power down without an external oscillator

Without using an external oscillator source, the power consumption required in order to have a periodic wakeup is determined by the power consumption of the internal oscillator source used to produce the wakeup.The Real-time clock running from the internal RC oscillator can be used. The power consumption of this oscillator is approximately 300uA. Instead, if the WDT is used to generate interrupts the current is reduced to approximately 50uA. Whenever the WDT underflows, the device will wake up.

14. ADDITIONAL FEATURES

The AUXR1 register contains several special purpose control bits that relate to several chip features. AUXR1 is described in Figure 14-1.

AUXR1

Address: A2h

Not bit addressable

Reset Source(s): Any reset

Reset Value: 000000x0B

7	6	5	4	3	2	1	0
CLKLP	EBRR	ENT1	ENT0	SRST	0	-	DPS

BIT	SYMBOL	FUNCTION
AUXR1.7	CLKLP	Clock Low Power Select. When set, reduces power consumption in the clock circuits. Can be used when the clock frequency is 8 MHz or less. After reset this bit is cleared to support up to 12 MHz operation.
AUXR1.6	EBRR	UART Break Detect Reset Enable. If '1', UART Break Detect will cause a chip reset and force the device into ISP mode.
AUXR1.5	ENT1	When set, the P0.7 pin is toggled whenever Timer1 overflows. The output frequency is therefore one half of the Timer1 overflow rate. Refer to the Timer/Counters section for details.
AUXR1.4	ENT0	When set the P1.2 pin is toggled whenever Timer0 overflows. The output frequency is therefore one half of the Timer0 overflow rate. Refer to the Timer/Counters section for details.
AUXR1.3	SRST	Software Reset. When set by software, resets the **P89LPC920/921/922** as if a hardware reset occurred.
AUXR1.2	0	This bit contains a hard-wired 0. Allows toggling of the DPS bit by incrementing AUXR1, without interfering with other bits in the register.
AUXR1.1	-	Not used. Allowable to set to a "1" .
AUXR1.0	DPS	Data Pointer Select. Chooses one of two Data Pointers.

Figure 14-1: AUXR1 register

Software reset

The SRST bit in AUXR1 gives software the opportunity to reset the processor completely, as if an external reset or watchdog reset had occurred. If a value is written to AUXR1 that contains a 1 at bit position 3, all SFRs will be initialized and execution will resume at program address 0000. Care should be taken when writing to AUXR1 to avoid accidental software resets.

Dual Data Pointers

The dual Data Pointers (DPTR) adds to the ways in which the processor can specify the address used with certain instructions. The DPS bit in the AUXR1 register selects one of the two Data Pointers. The DPTR that is not currently selected is not accessible to software unless the DPS bit is toggled.

Specific instructions affected by the Data Pointer selection are:

- INC DPTR Increments the Data Pointer by 1.
- JMP @A+DPTR Jump indirect relative to DPTR value.
- MOV DPTR, #data16 Load the Data Pointer with a 16-bit constant.

ADDITIONAL FEATURES

- MOVCA, @A+DPTR Move code byte relative to DPTR to the accumulator.
- MOVXA, @DPTR Move data byte the accumulator to data memory relative to DPTR.
- MOVX@DPTR, A Move data byte from data memory relative to DPTR to the accumulator.

Also, any instruction that reads or manipulates the DPH and DPL registers (the upper and lower bytes of the current DPTR) will be affected by the setting of DPS. The MOVX instructions have limited application for the **P89LPC920/921/922** since the part does not have an external data bus. However, they may be used to access Flash configuration information (see Flash Configuration section) or auxiliary data (XDATA) memory.

Bit 2 of AUXR1 is permanently wired as a logic 0. This is so that the DPS bit may be toggled (thereby switching Data Pointers) simply by incrementing the AUXR1 register, without the possibility of inadvertently altering other bits in the register.

15. FLASH MEMORY

General description

The **P89LPC920/921/922** Flash memory provides in-circuit electrical erasure and programming. The Flash can be read and written as bytes. The Sector and Page Erase functions can erase any Flash sector (1 KB) or page (64 bytes). The Chip Erase operation will erase the entire program memory. Five Flash programming methods are available. On-chip erase and write timing generation contribute to a user-friendly programming interface. The **P89LPC920/921/922** Flash reliably stores memory contents even after 100,000 erase and program cycles. The cell is designed to optimize the erase and programming mechanisms. The **P89LPC920/921/922** uses V_{DD} as the supply voltage to perform the Program/Erase algorithms.

Features

- Parallel programming with industry-standard commercial programmers
- In-Circuit serial Programming (ICP) with industry-standard commercial programmers.
- IAP-Lite allows individual and multiple bytes of code memory to be used for data storage and programmed under control of the end application.
- Internal fixed boot ROM, containing low-level In-Application Programming (IAP) routines that can be called from the end application (in addition to IAP-Lite).
- Default serial loader providing In-System Programming (ISP) via the serial port, located in upper end of user program memory.
- Boot vector allows user provided Flash loader code to reside anywhere in the Flash memory space, providing flexibility to the user.
- Programming and erase over the full operating voltage range
- Read/Programming/Erase using ISP/IAP/IAP-Lite
- Any flash program operation in 2 ms (4ms for erase/program)
- Programmable security for the code in the Flash for each sector.
- > 100,000 typical erase/program cycles for each byte.
- 10-year minimum data retention.

Flash programming and erase

The **P89LPC920/921/922** program memory consists 1 KB sectors. Each sector can be further divided into 64-byte pages. In addition to sector erase and page erase, a 64-byte page register is included which allows from 1 to 64 bytes of a given page to be programmed at the same time, substantially reducing overall programming time. Five mthods of programming this device are available.

- **Parallel programming** with industry-standard commercial programmers.
- **In-Circuit** serial **Programming (ICP)** with industry-standard commercial programmers.
- **IAP-Lite** allows individual and multiple bytes of code memory to be used for data storage and programmed under control of the end application.
- Internal fixed boot ROM, containing low-level **In-Application Programming (IAP)** routines athat can be called from the end application (in addition to IAP-Lite).
- A factory-provided default serial loader, located in upper end of user program memory, providing **In-System Programming (ISP)** via the serial port.

Using Flash as data storage: IAP-Lite

The Flash code memory array of this device supports IAP-Lite in addition to standard IAP functions. Any byte in a non-secured sector of the code memory array may be read using the MOVC instruction and thus is suitable for use as non-volatile data storage. IAP-Lite provides an erase-program function that makes it easy for one or more bytes within a page to be erased and pro-

grammed in a single operation without the need to erase or program any other bytes in the page. IAP-Lite is performed in the application under the control of the microcontroller's firmware using four SFRs and an internal 64-byte "page register" to facilitate erasing and programing within unsecured sectors. These SFRs are:

- FMCON (Flash Control Register). When read, this is the status register. When written, this is a command register. Note that the status bits are cleared to '0's when the command is written.
- FMDATA (Flash Data Register). Accepts data to be loaded into the page register.
- FMADRL, FMADRH (Flash memory address low, Flash memory address high). Used to specify the byte address within the page register or specify the page within user code memory.

The page register consists of 64 bytes and an update flag for each byte. When a LOAD command is issued to FMCON the page register contents and all of the update flags will be cleared. When FMDATA is written, the value written to FMDATA will be stored in the page register at the location specified by the lower 6 bits of FMADRL. In addition, the update flag for that location will be set. FMADRL will auto-increment to the next location. Auto-increment after writing to the last byte in the page register will "wrap -around" to the first byte in the page register, but will not affect FMADRL[7:6].. Bytes loaded into the page register do not have to be continous. Any byte location can be loaded into the page register by changing the contents of FMADRL prior to writing to FMDATA. However, each location in the page register can only be written once following each LOAD command. Attempts to write to a page register location more than once should be avoided.

FMADRH and FMADRL[7:6] are used to select a page of code memory for the erase-program function. When the erase-program command is written to FMCON, the locations within the code memory page that correspond to updated locations in the page register, will have their contents erased and programmed with the contents of their corresponding locations in the page register.Only the bytes that were loaded into the page register will be erased and programmed in the user code array. Other bytes within the user code memory will not be affected.

Writing the erase-program command (68H) to FMCON will start the erase-program process and place the CPU in a program-idle state.The CPU will remain in this idle state until the erase-program cycle is either completed or terminated by an interrupt. When the program-idle state is exited FMCON will contain status information for the cycle.

If an interrupt occurs during an erase/programming cycle, the erase/programming cycle will be aborted and the OI flag (Operation Interrupted) in FMCON will be set. If the application permits interrupts during erasing-programming the user code should check the OI flag (FMCON.0) after each erase-programming operation to see if the operation was aborted. If the operation was aborted, the user's code will need to repeat the process starting with loading the page register.

The erase-program cycle takes 4ms (2ms for erase, 2ms for programming) to complete, regardless of the number of bytes that were loaded into the page register.

Erasing-programming of a single byte (or multiple bytes) in code memory is accomplished using the following steps:

- Write the LOAD command (00H) to FMCON. The LOAD command will clear all locations in the page register and their corresponding update flags.
- Write the address within the page register to FMADRL. Since the loading the page register uses FMADRL[5:0], and since the erase-program command uses FMADRH and FMADRL[7:6], the user can write the byte location within the page register (FMADRL[5:0]) and the code memory page address (FMADRH and FMADRL[7:6]) at this time.
- Write the data to be programmed to FMDATA. This will increment FMADRL pointing to the next byte in the page register.
- Write the address of the next byte to be programmed to FMADRL, if desired. (Not needed for contiguous bytes since FMADRL is auto-incremented). All bytes to be programmed must be within the same page.
- Write the data for the next byte to be programmed to FMDATA.
- Repeat writing of FMADRL and/or FMDATA until all desired bytes have been loaded into the page register.
- Write the page address in user code memory to FMADRH and FMADRL[7:6], if not previously included when writing the page register address to FMADRL[5:0].
- Write the erase-program command (68H) to FMCON,starting the erase-program cycle.
- Read FMCON to check status. If aborted, repeat starting with the LOAD command.

An assembly language routine to load the page register and perform an erase/program operation is shown in Figure 15-2. A

similar C-language routine is shown in Figure 15-3.

FMCON

Address: E4h

Not bit addressable

Reset Source(s): Any reset

Reset Value:

7	6	5	4	3	2	1	0
-	-	-	-	HVA	HVE	SV	OI

BIT	SYMBOL	FUNCTION
FMCON.7-4	-	Reserved.
FMCON.3	HVA	High voltage abort. Set if either an interrupt or a brown-out is detected during a program or erase cycle. Also set if the brown-out detector is disabled at the start of a program or erase cycle.
FMCON.2	HVE	High voltage error. Set when an error occurs in the high voltage generator.
FMCON.1	SV	Security violation. Set when an attempt is made to program, erase, or CRC a secured sector or page.
FMCON.0	OI	Operation interrupted. Set when cycle aborted due to an interrupt or reset.

Figure 15-1: Flash Memory Control Registe

r

```
;* Inputs:                                          *
;*    R3 = number of bytes to program (byte)        *
;*    R4 = page address MSB(byte)                   *
;*    R5 = page address LSB(byte)                   *
;*    R7 = pointer to data buffer in RAM(byte)      *
;* Outputs:                                         *
;*    R7 = status (byte)                            *
;*     C = clear on no error, set on error          *

LOAD  EQU   00H
EP    EQU   68H

PGM_USER:
      MOV   FMCON,#LOAD       ;load command, clears page register
      MOV   FMADRH,R4         ;get high address
      MOV   FMADRL,R5         ;get low address
      MOV   A,R7              ;
      MOV   R0,A              ;get pointer into R0
LOAD_PAGE:
      MOV   FMDAT,@R0         ;write data to page register
      INC   R0                ;point to next byte
      DJNZ  R3,LOAD_PAGE      ;do until count is zero
      MOV   FMCON,#EP         ;else erase & program the page

      MOV   R7,FMCON          ;copy status for return
      MOV   A,R7              ;read status
      ANL   A,#0FH            ;save only four lower bits
      JNZ   BAD               ;
      CLR   C                 ;clear error flag if good
      RET                     ;and return
BAD:
      SETB  C                 ;set error flag
      RET                     ;and return
```

Figure 15-2: Assembly language routine to erase/program all or part of a page

```
#include <REG931.H>

unsigned char idata dbytes[64];           // data buffer
unsigned char Fm_stat;              // status result

bit PGM_USER (unsigned char, unsigned char);
bit prog_fail;

void main ()

{
      prog_fail=PGM_USER(0x1F,0xC0);
}


bit PGM_USER (unsigned char page_hi, unsigned char page_lo)
      {
            #define LOAD      0x00  // clear page register, enable loading
            #define EP        0x68  // erase & program page
            unsigned char     i;    // loop count

      FMCON = LOAD;                 //load command, clears page reg
      FMADRH = page_hi;       //
      FMADRL = page_lo;       //write my page address to addr regs

      for   (i=0;i<64;i=i+1)
            {
                  FMDATA = dbytes[i];
            }
      FMCON = EP;             //erase & prog page command
      Fm_stat = FMCON;              //read the result status
      if ((Fm_stat & 0x0F)!=0) prog_fail=1; else prog_fail=0;
      return(prog_fail);
      }
```

Figure 15-3: C-language routine to erase/program all or part of a page

In-Circuit Programming (ICP)

In-Circuit Programming is a method intended to allow commercial programmers to program and erase these devices without removing the microcontroller from the system. The In-Circuit Programming facility consists of a series of internal hardware resources to facilitate remote programming of the **P89LPC920/921/922** through a two-wire serial interface. Philips has made in-circuit programming in an embedded application possible with a minimum of additional expense in components and circuit board area. The ICP function uses five pins (Vdd, Vss, P0.5, P0.4, and $\overline{RST}$). Only a small connector needs to be available to interface your application to an external programmer in order to use this feature.

ISP and IAP capabilities of the P89LPC920/921/922

An In-Application Programming (IAP) interface is provided to allow the end user's application to erase and reprogram the user code memory. In addition, erasing and reprogramming of user-programmable bytes including UCFG1, the Boot Status Bit, and the Boot Vector is supported. As shipped from the factory, the upper 512 bytes of user code space contains a serial In-System Programming (ISP) loader allowing for the device to be programmed in circuit through the serial port. This ISP boot loader will, in turn, call low-level routines through the same common entry point that can be used by the end-user application.

Boot ROM

When the microcontroller contains a a 256 byte Boot ROM that is separate from the user's Flash program memory. This Boot ROM contains routines which handle all of the low level details needed to erase and program the user Flash memory . A user program simply calls a common entry point in the Boot ROM with appropriate parameters to accomplish the desired operation. Boot ROM operations include operations such as erase sector, erase page, program page, CRC, program security bit, etc. The Boot ROM occupies the program memory space at the top of the address space from FF00 to FFFF hex, thereby not conflicting with the user program memory space.This function is in addition to the IAP-Lite feature.

Power-On reset code execution

The **P89LPC920/921/922** contains two special Flash elements: the BOOT VECTOR and the Boot Status Bit. Following reset, the **P89LPC920/921/922** examines the contents of the Boot Status Bit. If the Boot Status Bit is set to zero, power-up execution starts at location 0000H, which is the normal start address of the user's application code. When the Boot Status Bit is set to a va one, the contents of the Boot Vector is used as the high byte of the execution address and the low byte is set to 00H.

The factory default settings for these devcies are show in Table 15-1, below.The factory pre-programmed boot loader can be erased by the user. **Users who wish to use this loader should take cautions to avoid erasing the last 1KB sector on the device. Instead, the page erase function can be used to erase the eight 64-byte pages located in this sector.** A custom boot loader can be written with the Boot Vector set to the custom boot loader, if desired.

Table 15-1: Boot Loader Address and Default Boot Vector

PRODUCT	FLASH SIZE	END ADDRESS	SIGNATURE BYTES MFG	ID1	ID2	SECTOR SIZE	PAGE SIZE	PRE-PROGRAMMED SERIAL LOADER	DEFAULT BOOT VECTOR
P89LPC922	8K x 8	1FFF	15H	DDH	0CH	1Kx8	64x8	1E00H-1FFFH	1FH
			or 15H	DDH	05H				
P89LPC921	4K x 8	0FFF	15H	DDH	0BH	1Kx8	64x8	0E00H-0FFFH	0FH
			or 15H	DDH	05H				
P89LPC920	2K x 8	07FF	15H	DDH	1AH	1Kx8	64x8	0600H-07FFH	07H

Hardware activation of the Boot Loader

The boot loader can also be executed by forcing the device into ISP mode during a power-on sequence (see Figure 15-4).This is accomplished by powering up the device with the reset pin initially held low and holding the pin low for a fixed time after VDD rises to its normal operating value. This is followed by three, and only three, properly timed low-going pulses. Fewer or more than three pulses will result in the device not entering ISP mode. Timing specifications may be found in the datasheet for this device.

This has the same effect as having a non-zero status bit. This allows an application to be built that will normally execute the user code but can be manually forced into ISP operation. If the factory default setting for the Boot Vector is changed, it will no longer point to the factory pre-programmed ISP boot loader code. If this happens, the only way it is possible to change the contents of the Boot Vector is through the parallel or ICP programming method, provided that the end user application does not contain a customized loader that provides for erasing and reprogramming of the Boot Vector and Boot Status Bit. After programming the Flash, the status byte should be programmed to zero in order to allow execution of the user's application code beginning at address 0000H.

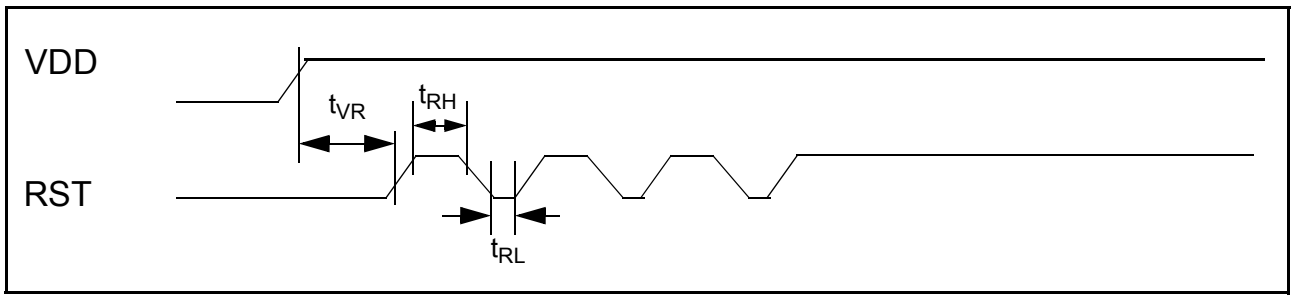

Figure 15-4: Forcing ISP Mode

In-System Programming (ISP)

In-System Programming is performed without removing the microcontroller from the system. The In-System Programming facility consists of a series of internal hardware resources coupled with internal firmware to facilitate remote programming of the **P89LPC920/921/922** through the serial port. This firmware is provided by Philips and embedded within each **P89LPC920/921/922** device. The Philips In-System Programming facility has made in-circuit programming in an embedded application possible with a minimum of additional expense in components and circuit board area. The ISP function uses five pins (Vdd, Vss, TxD, RxD, and $\overline{RST}$). Only a small connector needs to be available to interface your application to an external circuit in order to use this feature.

Using the In-System Programming

The ISP feature allows for a wide range of baud rates to be used in your application, independent of the oscillator frequency. It is also adaptable to a wide range of oscillator frequencies. This is accomplished by measuring the bit-time of a single bit in a received character. This information is then used to program the baud rate in terms of timer counts based on the oscillator frequency. The ISP feature requires that an initial character (an uppercase U) be sent to the **P89LPC920/921/922** to establish the baud rate. The ISP firmware provides auto-echo of received characters. Once baud rate initialization has been performed, the ISP firmware will only accept Intel Hex-type records. Intel Hex records consist of ASCII characters used to represent hexadecimal values and are summarized below:

:NNAAAARRDD..DDCC<crlf>

In the Intel Hex record, the "NN" represents the number of data bytes in the record. The P89LPC920/921/922 will accept up to 64 (40H) data bytes. The "AAAA" string represents the address of the first byte in the record. If there are zero bytes in the record, this field is often set to 0000. The "RR" string indicates the record type. A record type of "00" is a data record. A record type of "01" indicates the end-of-file mark. In this application, additional record types will be added to indicate either commands or data for the ISP facility. The maximum number of data bytes in a record is limited to 64 (decimal). ISP commands are summarized in Table 15-2 . As a record is received by the **P89LPC920/921/922**, the information in the record is stored internally and a checksum calculation is performed. The operation indicated by the record type is not performed until the entire record has been received. Should an error occur in the checksum, the **P89LPC920/921/922** will send an "X" out the serial port indicating a checksum error. If the checksum calculation is found to match the checksum in the record, then the command will be executed. In most cases, successful reception of the record will be indicated by transmitting a "." character out the serial port

Table 15-2: In-System Programming (ISP) hex record formats

Record type	Command/data function
00	Program User Code Memory Page :nnaaaa00dd..ddcc Where: nn = number of bytes to program aaaa = page address dd..dd = data bytes cc = checksum Example: :10000000010203040500607080 9cc
01	Read Version Id :00xxxx01cc Where: xxxx = required field but value is a "don't care" cc = checksum Example: :00000001cc

Table 15-2: In-System Programming (ISP) hex record formats

Record type	Command/data function
02	Miscellaneous Write Functions :02xxxx02ssddcc Where: xxxx = required field but value is a "don't care" ss = subfunction code dd = data cc = checksum Subfunction codes: 00 = UCFG1 01 = reserved 02 = Boot Vector 03 = Status Byte 04 = reserved 05 = reserved 06 = reserved 07 = reserved 08 = Security Byte 0 09 = Security Byte 1 0A = Security Byte 2 0B = Security Byte 3 0C = Security Byte 4 0D = Security Byte 5 0E = Security Byte 6 0F = Security Byte 7 Example: :020000020347cc

Table 15-2: In-System Programming (ISP) hex record formats

Record type	Command/data function
03	Miscellaneous Read Functions :01xxxx03sscc Where xxxx = required field but value is a "don't care" ss = subfunction code cc = checksum Subfunction codes: 00 = UCFG1 01 = reserved 02 = Boot Vector 03 = Status Byte 04 = reserved 05 = reserved 06 = reserved 07 = reserved 08 = Security Byte 0 09 = Security Byte 1 0A = Security Byte 2 0B = Security Byte 3 0C = Security Byte 4 0D = Security Byte 5 0E = Security Byte 6 0F = Security Byte 7 10 = Manufacturer Id 11 = Device Id 12 = Derivative Id Example: :0100000312cc

Table 15-2: In-System Programming (ISP) hex record formats

Record type	Command/data function
04	Erase Sector/Page :03xxxx04ssaaaacc Where: xxxx = required field but value is a "don't care" aaaa = sector/page address ss = 01 erase sector = 00 erase page cc = checksum Example: :03000004010000F8
05	Read Sector CRC :01xxxx05aacc Where: xxxx = required field but value is a "don't care" aa = sector address high byte cc = checksum Example: :0100000504F6cc
06	Read Global CRC :00xxxx06cc Where: xxxx = required field but value is a "don't care" cc = checksum Example: :00000006FA
07	Direct Load of Baud Rate :02xxxx07HHLLcc Where: xxxx = required field but value is a "don't care" HH = high byte of timer LL = low byte of timer cc = checksum Example: :02000007FFFFcc

Table 15-2: In-System Programming (ISP) hex record formats

Record type	Command/data function
08	Reset MCU :00xxxx08cc Where: xxxx = required field but value is a "don't care" cc = checksum Example: :00000008F8

In-Application Programming method

Several In-Application Programming (IAP) calls are available for use by an application program to permit selective erasing and programming of Flash sectors, pages, security bits, configuration bytes, and device id. All calls are made through a common interface, PGM_MTP. The programming functions are selected by setting up the microcontroller's registers before making a call to PGM_MTP at FF00H. The IAP calls are shown in Table 15-4.

IAP Authorization Key

IAP functions which write or erase code memory require an authorization key be set by the calling routine prior to performing the IAP function call. This authorization key is set by writing 96H to RAM location FFH. For example:

```
MOV     R0,#0FFH
MOV     @R0,#96H
CALL    PGM_MTP
```

After the function call is processed by the IAP routine, the authorization key will be cleared. Thus it is necessary for the authorization key to be set prior to EACH call to PGM_MTP that requires a key. If an IAP routine that requires an authorization key is called without a valid authorization key present, the MCU will perform a reset.

It is not possible to use the Flash memory as the source of program instructions while programming or erasing this same Flash memory. During an IAP erase, program, or CRC the CPU enters a program-idle state.The CPU will remain in this program-idle state until the erase, program, or CRC cycle is completed. These cycles are self timed. When the cycle is completed, code execution resumes. If an interrupt occurs during an erase, programming or CRC cycle, the erase, programming, or CRC cycle will be aborted so that the Flash memory can be used as the source of instructions to service the interrupt. An IAP error condition will be flagged by setting the carry flag and status information returned. The status information returned is shown in Table 15-3. If the application permits interrupts during erasing, programming, or CRC cycles, the user code should check the carry flag after each erase, programming, or CRC operation to see if an error occurred. If the operation was aborted, the user's code will need to repeat the operation.

Table 15-3: IAP error status

Bit	Flag	Description
0	OI	Operation Interrupted. Indicates that an operation was aborted due to an interrupt occuring during a program or erase cycle.
1	SV	Security Violation. Set if program or erase operation fails due to security settings. Cycle is aborted.Memory contents are unchanged. CRC output is invalid.
2	HVE	High Voltage Error. Set if error detected in high voltage generation circuits. Cycle is aborted. Memory contents may be corrupted.
3	VE	Verify error. Set during IAP programming of user code if the contents of the programmed address does not agree with the intended programmed value. IAP uses the MOVC instruction to perform this verify. Attempts to program user code that is MOVC protected can be programmed but will generate this error after the programming cycle has been completed.
4	-	unused; reads as a '1'
5	-	unused; reads as a '1'
6	-	unused; reads as a '1'
7	-	unused; reads as a '0'

Table 15-4: IAP function calls

IAP function	IAP call parameters
Program User Code Page (requires "key")	**Input parameters:** ACC = 00h R3 = number of bytes to program R4 = page address (MSB) R5 = page address (LSB) R7 = pointer to data buffer in RAM F1 = 00h **Return parameter(s):** R7 = status Carry = set on error, clear on no error
Read Version Id	**Input parameters:** ACC = 01h **Return parameter(s):** R7 = IAP code version id

Table 15-4: IAP function calls

IAP function	IAP call parameters
Misc. Write(requires "key")	**Input parameters:** ACC = 02h R5 = data to write R7 = register address 00 = UCFG1 01 = reserved 02 = Boot Vector 03 = Status Byte 04 = reserved 05 = reserved 06 = reserved 07 = reserved 08 = Security Byte 0 09 = Security Byte 1 0A = Security Byte 2 0B = Security Byte 3 0C = Security Byte 4 0D = Security Byte 5 0E = Security Byte 6 0F = Security Byte 7 **Return parameter(s):** R7 = status Carry = set on error, clear on no error

Table 15-4: IAP function calls

IAP function	IAP call parameters
Misc. Read	**Input parameters:** ACC = 03h R7 = register address 00 = UCFG1 01 = reserved 02 = Boot Vector 03 = Status Byte 04 = reserved 05 = reserved 06 = reserved 07 = reserved 08 = Security Byte 0 09 = Security Byte 1 0A = Security Byte 2 0B = Security Byte 3 0C = Security Byte 4 0D = Security Byte 5 0E = Security Byte 6 0F = Security Byte 7 **Return parameter(s):** R7 = register data if no error, else error status Carry = set on error, clear on no error
Erase Sector/Page(requires "key")	**Input parameters:** ACC = 04h R7 = 00H (erase page) or 01H (erase sector) R4 = sector/page address (MSB) R5 =sector/page address (LSB) **Return parameter(s):** R7 = status Carry = set on error, clear on no error

Table 15-4: IAP function calls

IAP function	IAP call parameters
Read Sector CRC	**Input parameters:** ACC = 05h R7 = sector address **Return parameter(s):** R4 = CRC bits 31:24 R5 = CRC bits 23:16 R6 = CRC bits 15:8 R7 = CRC bits 7:0 (if no error) R7 = error status (if error) Carry = set on error, clear on no error
Read Global CRC	**Input parameters:** ACC = 06h **Return parameter(s):** R4 = CRC bits 31:24 R5 = CRC bits 23:16 R6 = CRC bits 15:8 R7 = CRC bits 7:0 (if no error) R7 = error status (if error) Carry = set on error, clear on no error
Read User Code	**Input parameters:** ACC = 07h R4 = address (MSB) R5 = address (LSB) **Return parameter(s):** R7 = data

User configuration bytes

A number of user-configurable features of the **P89LPC920/921/922** must be defined at power-up and therefore cannot be set by the program after start of execution. These features are configured through the use of an Flash byte UCFG1 shown in Figure 15-5.

UCFG1

Address: xxxxh

7	6	5	4	3	2	1	0
WDTE	RPE	BOE	WDSE	-	FOSC2	FOSC1	FOSC0

Unprogrammed value: 63h

BIT	SYMBOL	FUNCTION
UCFG1.7	WDTE	Watchdog timer reset enable. When set =1, enables the watchdog timer reset. When cleared = 0, disables the watchdog timer reset. The timer may still be used to generate an interrupt. Refer to Table 13-1 for details.
UCFG1.6	RPE	Reset pin enable. When set =1, enables the reset function of pin P1.5. When cleared, P1.5 may be used as an input pin. NOTE: During a power-up sequence, the RPE selection is overriden and this pin will always functions as a reset input. After power-up the pin will function as defined by the RPE bit. Only a power-up reset will temporarily override the selection defined by RPE bit. Other sources of reset will not override the RPE bit.
UCFG1.5	BOE	Brownout Detect Enable (see section "Brownout Detection" on page 33).
UCFG1.4	WDSE	Watchdog Safety Enable bit. Refer to Table 13-1 for details.
UCFG1.3	-	Reserved (should remain unprogrammed at zero).
UCFG1.2-0	FOSC2-FSOC0	CPU oscillator type select. See section "Clocks" on page 21 for additional information. Combinations other than those shown below should not be used. They are reserved for future use.
	FOSC2-FOSC0	Oscillator Configuration
	1 1 1	External clock input on XTAL1.
	1 0 0	Watchdog Oscillator, 400 kHz (+20/ -30% tolerance).
	0 1 1	Internal RC oscillator, 7.373 MHz ±2.5%.
	0 1 0	Low frequency crystal, 20 kHz to 100 kHz.
	0 0 1	Medium frequency crystal or resonator, 100 kHz to 4 MHz.
	0 0 0	High frequency crystal or resonator, 4 MHz to 12 MHz.

Factory default value for UCFG1 is set for watchdog reset disabled, reset pin enabled, brownout detect enabled, and using the internal RC oscillator

Figure 15-5: Flash User Configuration Byte 1 (UCFG1)

User security bytes

This device has three security bits associated with each of its eight sectors, as shown in Figure 6.

SECx	7	6	5	4	3	2	1	0
Address: xxxxh	-	-	-	-	-	EDISx	SPEDISx	MOVCDISx

Unprogrammed value: 00h

BIT	SYMBOL	FUNCTION
SECx.7-3	-	Reserved (should remain unprogrammed at zero).
SECx.2	EDISx	**Erase Disable ISP**. Disables the ability to perform an erase of sector "x" in ISP or IAP mode.. When programmed, this bit and sector x can only be erased by a 'global' erase command using a commercial programmer . This bit and sector x CANNOT be erased in ISP or IAP modes.
SECx.1	SPEDISx	**Sector Program Erase Disable x**. Disables program or erase of **all or part of sector x**. This bit and sector x are erased by either a sector erase command (ISP, IAP, commercial programmer) or a 'global' erase command (commercial programmer).
SECx.0	MOVCDISx	**MOVC Disable**. Disables the MOVC command for sector x. Any MOVC that attempts to read a byte in a MOVC protected sector will return invalid data. This bit can only be erased when sector x is erased.

Figure 6: User sector Security Bytes (SEC0, ..., SEC7)

Table 15-5: Effects of Security Bits

EDISx	SPEDISx	MOVCDISx	Effects on Programming
0	0	0	None.
0	0	1	Security violation flag set for sector CRC calculation for the specific sector. Security violation flag set for global CRC calculation if any MOVCDISx bit is set. Cycle aborted. Memory contents unchanged. CRC invalid. Program/erase commands will not result in a security violation.
0	1	x	Security violation flag set for program commands or an erase page command. Cycle aborted. Memory contents unchanged. Sector erase and global erase are allowed.
1	x	x	Security violation flag set for program or erase commands. Cycle aborted. Memory contents unchanged. Global erase is allowed.

Boot Vector

BOOTVEC	7	6	5	4	3	2	1	0
Address: xxxxh	-	-	-	BOOTV4	BOOTV3	BOOTV2	BOOTV1	BOOTV0

Factory default value: 1Fh

BIT	SYMBOL	FUNCTION
BOOTVEC.7-5	-	Reserved (should remain unprogrammed at zero).
BOOTVEC.4-0	-	Boot Vector. If the Boot Vector is selected as the reset address, the **P89LPC920/921/922** will start execution at an address comprised of 00H in the lower eight bits and this BOOTVEC as the upper bits after a reset. (See section "Reset vector" on page 40).

Figure 15-7: Boot Vector (BOOTVEC)

Boot Status

BOOTSTAT	7	6	5	4	3	2	1	0
Address: xxxxh	-	-	-	-	-	-	-	BSB

Factory default value: 01h

BIT	SYMBOL	FUNCTION
BOOTSTAT.7-1	-	Reserved (should remain unprogrammed at zero).
BOOTSTAT.0	BSB	Boot Status Bit. If programmed to '1', the **P89LPC920/921/922** will always start execution at an address comprised of 00H in the lower eight bits and BOOTVEC as the upper bits after a reset. (See section "Reset vector" on page 40).

Figure 15-8: Boot Status (BOOTSTAT)

FLASH MEMORY

16. INSTRUCTION SET

Table 16-1: Instruction set summary

Mnemonic	Description	Bytes	Cycles	Hex code
	ARITHMETIC			
ADD A,Rn	Add register to A	1	1	28-2F
ADD A,dir	Add direct byte to A	2	1	25
ADD A,@Ri	Add indirect memory to A	1	1	26-27
ADD A,#data	Add immediate to A	2	1	24
ADDC A,Rn	Add register to A with carry	1	1	38-3F
ADDC A,dir	Add direct byte to A with carry	2	1	35
ADDC A,@Ri	Add indirect memory to A with carry	1	1	36-37
ADDC A,#data	Add immediate to A with carry	2	1	34
SUBB A,Rn	Subtract register from A with borrow	1	1	98-9F
SUBB A,dir	Subtract direct byte from A with borrow	2	1	95
SUBB A,@Ri	Subtract indirect memory from A with borrow	1	1	96-97
SUBB A,#data	Subtract immediate from A with borrow	2	1	94
INC A	Increment A	1	1	04
INC Rn	Increment register	1	1	08-0F
INC dir	Increment direct byte	2	1	05
INC @Ri	Increment indirect memory	1	1	06-07
DEC A	Decrement A	1	1	14
DEC Rn	Decrement register	1	1	18-1F
DEC dir	Decrement direct byte	2	1	15
DEC @Ri	Decrement indirect memory	1	1	16-17
INC DPTR	Increment data pointer	1	2	A3
MUL AB	Multiply A by B	1	4	A4
DIV AB	Divide A by B	1	4	84
DA A	Decimal Adjust A	1	1	D4
	LOGICAL			
ANL A,Rn	AND register to A	1	1	58-5F
ANL A,dir	AND direct byte to A	2	1	55
ANL A,@Ri	AND indirect memory to A	1	1	56-57
ANL A,#data	AND immediate to A	2	1	54

Mnemonic	Description	Bytes	Cycles	Hex code
ANL dir,A	AND A to direct byte	2	1	52
ANL dir,#data	AND immediate to direct byte	3	2	53
ORL A,Rn	OR register to A	1	1	48-4F
ORL A,dir	OR direct byte to A	2	1	45
ORL A,@Ri	OR indirect memory to A	1	1	46-47
ORL A,#data	OR immediate to A	2	1	44
ORL dir,A	OR A to direct byte	2	1	42
ORL dir,#data	OR immediate to direct byte	3	2	43
XRL A,Rn	Exclusive-OR register to A	1	1	68-6F
XRL A,dir	Exclusive-OR direct byte to A	2	1	65
XRL A, @Ri	Exclusive-OR indirect memory to A	1	1	66-67
XRL A,#data	Exclusive-OR immediate to A	2	1	64
XRL dir,A	Exclusive-OR A to direct byte	2	1	62
XRL dir,#data	Exclusive-OR immediate to direct byte	3	2	63
CLR A	Clear A	1	1	E4
CPL A	Complement A	1	1	F4
SWAP A	Swap Nibbles of A	1	1	C4
RL A	Rotate A left	1	1	23
RLC A	Rotate A left through carry	1	1	33
RR A	Rotate A right	1	1	03
RRC A	Rotate A right through carry	1	1	13
	DATA TRANSFER			
MOV A,Rn	Move register to A	1	1	E8-EF
MOV A,dir	Move direct byte to A	2	1	E5
MOV A,@Ri	Move indirect memory to A	1	1	E6-E7
MOV A,#data	Move immediate to A	2	1	74
MOV Rn,A	Move A to register	1	1	F8-FF
MOV Rn,dir	Move direct byte to register	2	2	A8-AF
MOV Rn,#data	Move immediate to register	2	1	78-7F
MOV dir,A	Move A to direct byte	2	1	F5
MOV dir,Rn	Move register to direct byte	2	2	88-8F
MOV dir,dir	Move direct byte to direct byte	3	2	85
MOV dir,@Ri	Move indirect memory to direct byte	2	2	86-87

Mnemonic	Description	Bytes	Cycles	Hex code
MOV dir,#data	Move immediate to direct byte	3	2	75
MOV @Ri,A	Move A to indirect memory	1	1	F6-F7
MOV @Ri,dir	Move direct byte to indirect memory	2	2	A6-A7
MOV @Ri,#data	Move immediate to indirect memory	2	1	76-77
MOV DPTR,#data	Move immediate to data pointer	3	2	90
MOVC A,@A+DPTR	Move code byte relative DPTR to A	1	2	93
MOVC A,@A+PC	Move code byte relative PC to A	1	2	94
MOVX A,@Ri	Move external data(A8) to A	1	2	E2-E3
MOVX A,@DPTR	Move external data(A16) to A	1	2	E0
MOVX @Ri,A	Move A to external data(A8)	1	2	F2-F3
MOVX @DPTR,A	Move A to external data(A16)	1	2	F0
PUSH dir	Push direct byte onto stack	2	2	C0
POP dir	Pop direct byte from stack	2	2	D0
XCH A,Rn	Exchange A and register	1	1	C8-CF
XCH A,dir	Exchange A and direct byte	2	1	C5
XCH A,@Ri	Exchange A and indirect memory	1	1	C6-C7
XCHD A,@Ri	Exchange A and indirect memory nibble	1	1	D6-D7
	BOOLEAN			
Mnemonic	Description	Bytes	Cycles	Hex code
CLR C	Clear carry	1	1	C3
CLR bit	Clear direct bit	2	1	C2
SETB C	Set carry	1	1	D3
SETB bit	Set direct bit	2	1	D2
CPL C	Complement carry	1	1	B3
CPL bit	Complement direct bit	2	1	B2
ANL C,bit	AND direct bit to carry	2	2	82
ANL C,/bit	AND direct bit inverse to carry	2	2	B0
ORL C,bit	OR direct bit to carry	2	2	72
ORL C,/bit	OR direct bit inverse to carry	2	2	A0
MOV C,bit	Move direct bit to carry	2	1	A2
MOV bit,C	Move carry to direct bit	2	2	92
	BRANCHING			

Mnemonic	Description	Bytes	Cycles	Hex code
ACALL addr 11	Absolute jump to subroutine	2	2	116F1
LCALL addr 16	Long jump to subroutine	3	2	12
RET	Return from subroutine	1	2	22
RETI	Return from interrupt	1	2	32
AJMP addr 11	Absolute jump unconditional	2	2	016E1
LJMP addr 16	Long jump unconditional	3	2	02
SJMP rel	Short jump (relative address)	2	2	80
JC rel	Jump on carry = 1	2	2	40
JNC rel	Jump on carry = 0	2	2	50
JB bit,rel	Jump on direct bit = 1	3	2	20
JNB bit,rel	Jump on direct bit = 0	3	2	30
JBC bit,rel	Jump on direct bit = 1 and clear	3	2	10
JMP @A+DPTR	Jump indirect relative DPTR	1	2	73
JZ rel	Jump on accumulator = 0	2	2	60
JNZ rel	Jump on accumulator ¹ 0	2	2	70
CJNE A,dir,rel	Compare A,direct jne relative	3	2	B5
CJNE A,#d,rel	Compare A,immediate jne relative	3	2	B4
CJNE Rn,#d,rel	Compare register, immediate jne relative	3	2	B8-BF
CJNE @Ri,#d,rel	Compare indirect, immediate jne relative	3	2	B6-B7
DJNZ Rn,rel	Decrement register, jnz relative	2	2	D8-DF
DJNZ dir,rel	Decrement direct byte, jnz relative	3	2	D5
	MISCELLANEOUS			
NOP	No operation	1	1	00

17. REVISION HISTORY

2003 Nov 6

Initial release.

REVISION HISTORY

18. INDEX

A

Analog comparators 31
    configuration 79
    configuration example 81
    enabling 79
    internal reference voltage 80
    interrupt 80
    power reduction modes 80, 81
Analog comparators and power reduction 31

B

Block diagram 10
BRGCON
    writing to 17
Brownout detection 33
    enabling and disabling 33
    operating range 33
    options 34
    rise and fall times of Vdd 33

C

Capture Compare Unit 51
CLKLP 24
Clock
    CPU clock 21
    CPU divider (DIVM) 23
    definitions 21
    external input option 23
    output 21
    PCLK 21
    RCCLK 21
    wakeup delay 23

D

Data EEPROM
block fill 9, 21, 25, 29, 33, 39, 41, 47, 51, 63, 79, 83, 85, 91, 93, 113, 117
hardware reset 9, 21, 25, 29, 33, 39, 41, 47, 51, 63, 79, 83, 85, 91, 93, 113, 117
Dual Data Pointers 91

F

FLASH 9, 21, 25, 29, 33, 39, 41, 47, 51, 63, 79, 83, 85, 91, 93, 113, 117
Boot Status 111
Boot Vector 111
Bootrom 98
features 93
hardware activation of the boot loader 98
in-application programming (IAP) 104
ISP 97, 99
ISP, IAP capabilities 97
power-on reset code execution 98
programming and erasure 93
sector size 97

I

I2C serial interface
clock rate selection for common frequencies 66
master receiver mode 68
master receiver states 73
master transmitter mode 67
master transmitter states 72
slave receiver mode 69
slave receiver states 74
IAP programming 93
Interrupts 29
arbitration ranking 25
edge-triggered 26
external input pin glitch suppression 26
external inputs 26
keypad 26
priority structure 25
ISP programming 93

L

Low power (CLKP) 24

M

Memory
- Code 18
- Data 18
- FLASH code 93
- IDATA 18
- organization 18

O

Oscillator
- high speed option 21
- low speed option 21
- meduim speed option 21
- RC option 22
- watchdog (WDT) option 22

P

Pin
- configuration
  - 28-pin PLCC package 9
  - 28-pin TSSOP package 9
- descriptions 11

Ports
- additional features 32
- input only configuration 31
- open drain output configuration 30
- Port 0 analog functions 31
- push-pull output configuration 31
- quasi-bidirectional output configuration 29

Power reduction modes 34
- normal mode 35
- power down mode (partial) 35

Power-down mode (total) 35
Power-on detection 34

R

Real time clock
clock sources 47
interrupt/wake up 48
Reset
enabling the external reset input pin 39, 109
software reset 91
sources 39
UART break-detect, ISP entry 40

S

SFR
AUXR1 91
BRGCON 53
CMPn 79
I2ADR 64
I2CON 65
I2DAT 64
I2SCLH 66
I2SCLL 66
I2STAT 66
KBCON 83
KBMASK 84
KBPATN 83
PCON 36
PCONA 37
PT0AD 31
RSTSRC 40
RTCCON 49
SCON 54
SSTAT 55
TAMOD 42
TCON 44
TMOD 41
TRIM 21, 22, 95
UCFG1 109
WDCON 87
SFRs
undefined locations, use of 14
Special Function Registers (SFR) table 17

T

Timer/counters
mode 0 42
mode 1 42
mode 2 (8-bit auto reload) 43
mode 3 (seperates TL0 & TH0) 43
mode 6 (8-bit PWM) 43
toggle output 46
TRIM (SFR)
power-on reset value 17

U

UART 51
automatic address recognition 60
baud rate generator 52
BRGR1 and BRGR0, updating 52
double buffering in 9-bit mode 59
double buffering in different modes 58
framing error 53, 57
mode 0 55
mode 0 (shift register) 51
mode 1 56
mode 1 (8-bit variable baud rate) 51
mode 2 57
mode 2 (9-bit fixed baud rate) 51
mode 3 57
mode 3 (9-bit variable baud rate) 51
multiprocessor communications 60
status register 55
transmit interrupts with double buffering enabled (modes 1, 2 and 3) 58
User Configuration Byte (UCFG1) 109, 110

W

Watchdog timer 85
feed sequence 86
timer mode 89
watchdog function 85
WDCLK = 0 and CPU power down 90