LEADTEK

GPS

Global
Positioning
System

LR9552
GPS Module

www.leadtek.com

1. INTRODUCTION 1
1.1. FEATURES 1
HARDWARE AND SOFTWARE 1
PERFORMANCE 1
INTERFACE 1
2. MODULE ARCHITECTURE 2
2.1. DIMENSIONS 3
2.2. SOFTWARE FEATURES 3
2.3. ENVIRONMENTAL SPECIFICATION 4
2.4. REFERENCE DESIGN 4
2.5. REGULATIONS COMPLIANCE 5
3. PERFORMANCE CHARACTERISTICS 7
3.1. POSITION AND VELOCITY ACCURACY 7
3.2. DYNAMIC CONSTRAINS 7
3.3. ACQUISITION TIME [1] 7
3.4. TIMING 1PPS OUTPUT 8
3.5. SENSITIVITY 8
4. HARDWARE INTERFACE POWER SUPPLY 9
4.1. SPECIFICATIONS 9
I. Pin Positions 9
II. Pin Assignment 10
5. SOFTWARE INTERFACE 11
6. MECHANICAL DRAWING AND FOOTPRINT 12
6.1. OUTLINE DRAWING 12
7. PACKAGE 13
7.1. PACKAGE SPECIFICATIONS 13
8. ROHS COMPLIANT INFORMATION 14
8.1. ROHS SOLDERING PROFILE 14
Reflow Profile 14
GLOSSARY 15

1. Introduction

The Leadtek GPS 9952 module (LR9552) is a high sensitivity and very compact smart antenna module, with built in GPS receiver circuit. This 20-channel global positioning system (GPS) receiver is designed for a wide range of OEM applications and is based on the fast and deep GPS signal search capabilities of SiRFStarIII™ architecture. Leadtek GPS 9552 is designed to allow quick and easy integration into GPS-related applications such as:

- λ PDA, Pocket PC, and other computing devices
- λ Car and Marine Navigation
- λ Fleet Management /Asset Tracking
- λ AVL and Location-Based Services
- λ Hand-Held Device for Personal Positioning and Navigation

1.1. Features

Hardware and Software

- λ Based on the high performance features of the SiRF GSC3f/LP single chip
- λ Compact module size for easy integration: 25 x 25 x 8.9 mm (with 4 mm patch antenna)
  25 x 25 x 6.9 mm (with 2 mm patch antenna) **[option]**
- λ Fully automatic assembly: reflow solder assembly ready
- λ Hardware compatible with SiRF GSW3.2 serial software

Performance

- λ Cold/Warm/Hot Start Time: 42/38/1 sec.
- λ Reacquisition Time: 0.1 second.
- λ RF Metal Shield for best performance in noisy environments.

Interface

- λ RS232 or TTL **(option)** level serial port for GPS communications interface
- λ Protocol: NMEA-0183/SiRF Binary (default NMEA).
- λ Baud Rate: 4800 ~ 57600 baud (default 4800).

© 2006 Leadtek Research Inc. All rights reserved.
Preliminary Confidential - Information is subject to change without prior notice.

2. Module architecture

LR9552 (RS232) Block Diagram

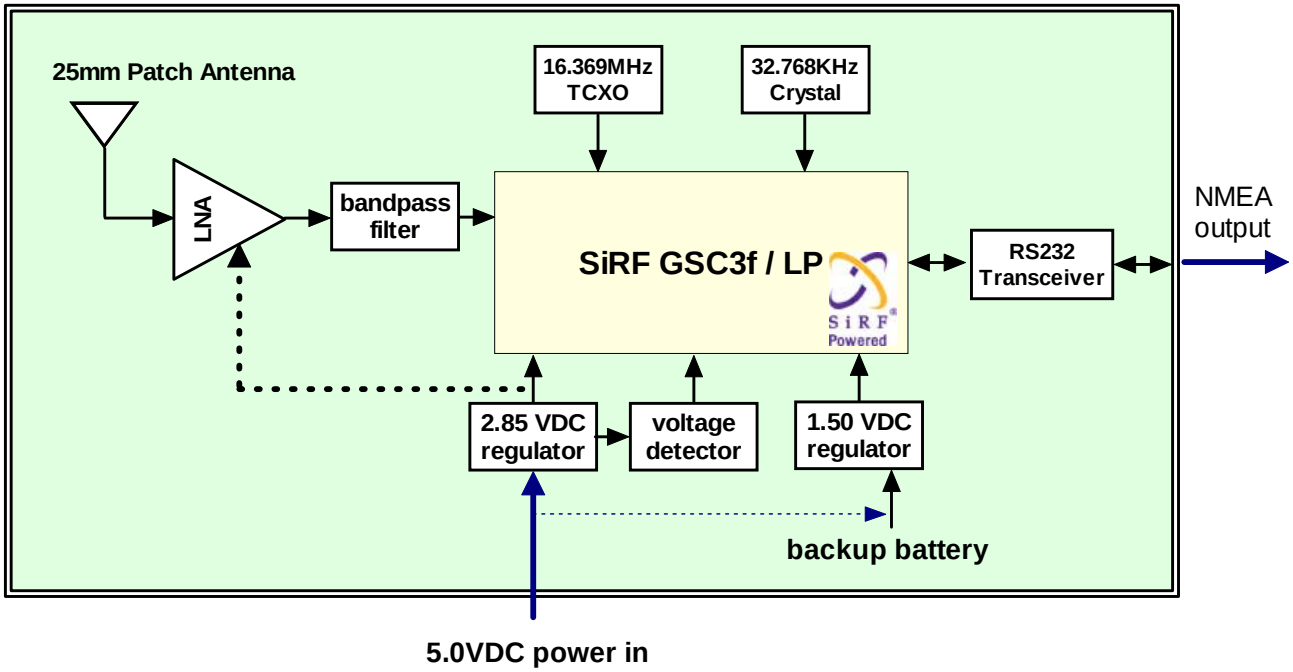

9552 (TTL) Block Diagram

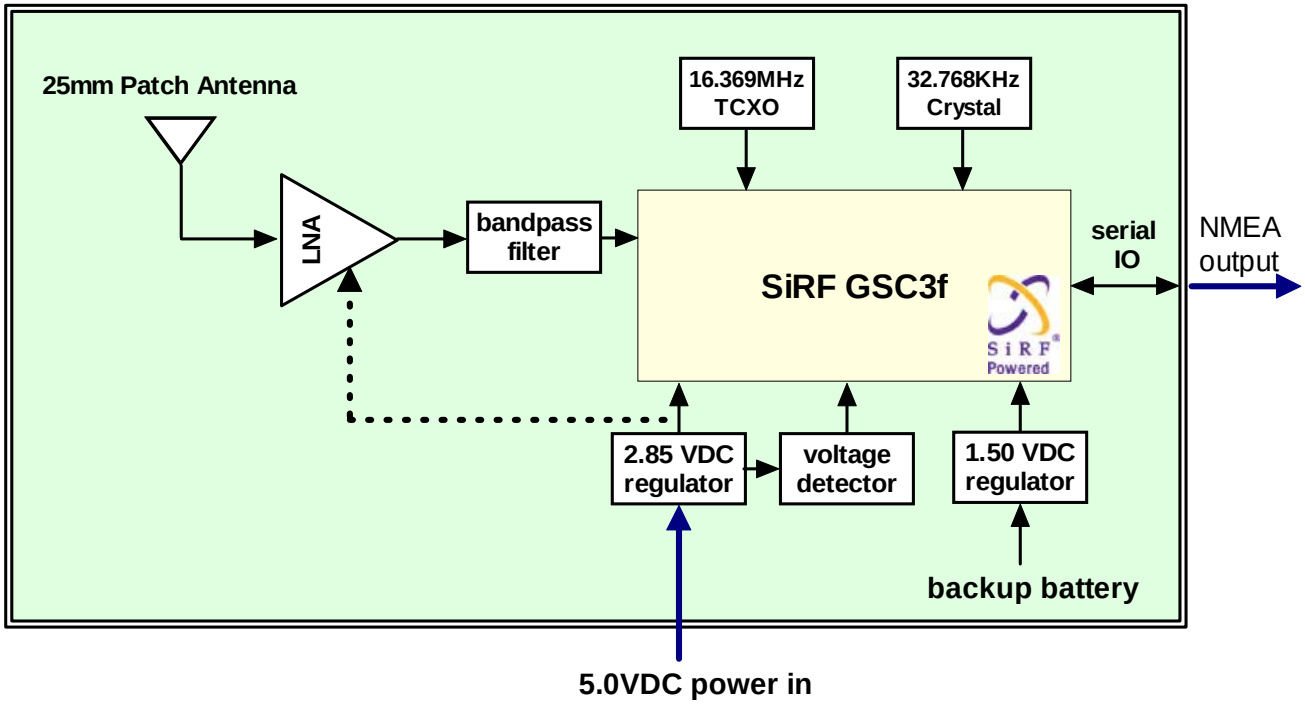

© 2006 Leadtek Research Inc. All rights reserved.
Preliminary Confidential - Information is subject to change without prior notice.

2.1. Dimensions

The Physical dimensions of the Leadtek 9552 GPS Module are as follow:

Items	Description
Length	25.0 ± 0.3 mm
Width	25.0 ± 0.3 mm
Height	8.90 ± 0.3 mm 6.90 ± 0.3 mm
Weight	13.0g (w/ 4mm patch antenna) 8.0g (w/ 2mm patch antenna)

2.2. Software Features

The Leadtek 9552 module includes GSW3.2., high sensitivity software solution. For SiRFStarIII/LP receivers, the default configuration is as follows:

Item	Description
Core of firmware	SiRF GSW3.2
Baud rate	4800, 9600, 19200, 38400 or 57600 bps (default 4800)
Code type	NMEA-0183 ASCII
Datum	WGS-84
Protocol message	GGA(1sec), GSA(5sec), GSV(5sec), RMC(1sec),VTG(1sec)
Output frequency	1 Hz

© 2006 Leadtek Research Inc. All rights reserved.
Preliminary Confidential - Information is subject to change without prior notice.

2.3. Environmental Specification

Item	Description
Operating temperature rang **(note)**	-30 deg. C to +60 deg. C
Storage temperature range	-30 deg. C to +65 deg. C
Humidity	up to 95% non-condensing or a wet bulb temperature of +35 deg. C
Altitude	18,000 meters (60,000 feet) max.
Velocity	515 meters/second (1000 knots) max.
Jerk	20 meters/second3, max.
Acceleration	4g, max.

Note: The module can be operated between -30℃~+85℃, but higher temperature may cause internal Li backup battery deterioration that will influence the performance of GPS hot start.

2.4. Reference design

The user can use a PMOS to control 9552 power on or off as below:

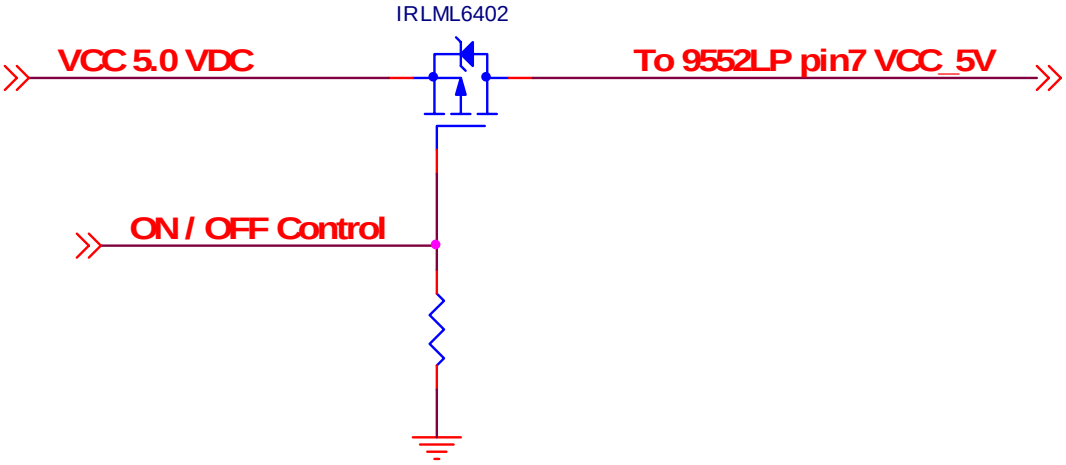

© 2006 Leadtek Research Inc. All rights reserved.
Preliminary Confidential - Information is subject to change without prior notice.

2.5. Regulations compliance

RoHS: This device complies with the Restriction of Hazardous Substances (RoHS) directive that is enforced on 1st July 2006, saying all electronic products sold in the EU must with RoHS compliance.

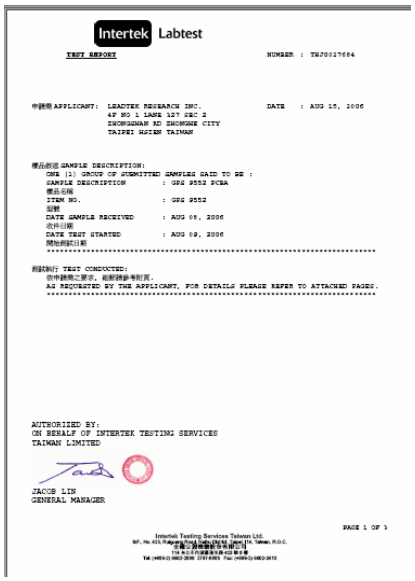

Intertek Labtest

TEST REPORT

NUMBER : TW00017664

申請商 APPLICANT: LEADTEK RESEARCH INC.
4F NO 1 LANE 127 SEC 2
NEIHU DISTRICT TAIPEI
TAIPEI HSIEN TAIWAN

DATE : AUG 15, 2006

樣品敘述 SAMPLE DESCRIPTION:
ONE (1) GROUP OF SUBMITTED SAMPLES SAID TO BE :
SAMPLE DESCRIPTION : GPS 9552 PCBA
樣品名稱
ITEM NO. : GPS 9552
型號
DATE SAMPLE RECEIVED : AUG 08, 2006
收件日期
DATE TEST STARTED : AUG 09, 2006
開始測試日期

測試執行 TEST CONDUCTED:
依申請商之要求，細部請參考附頁.
AS REQUESTED BY THE APPLICANT, FOR DETAILS PLEASE REFER TO ATTACHED PAGES.

AUTHORIZED BY:
ON BEHALF OF INTERTEK TESTING SERVICES
TAIWAN LIMITED

JACOB LIN
GENERAL MANAGER

PAGE 1 OF 1

Intertek Testing Services Taiwan Ltd.

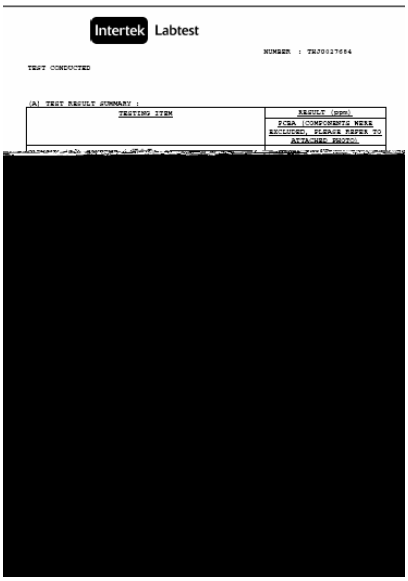

Intertek Labtest

NUMBER : TW00017664

TEST CONDUCTED

(A) TEST RESULT SUMMARY :

TESTING ITEM	RESULT (ppm)
	PCBA (COMPONENTS WERE EXCLUDED, PLEASE REFER TO ATTACHED PAGES).

[redacted]

© 2006 Leadtek Research Inc. All rights reserved.
Preliminary Confidential - Information is subject to change without prior notice.

FCC/CE: This device complies with the Federal Communications Commission (FCC), an independent United States government agency regulating interstate and international communications by radio, television, wire, satellite and cable, and CE, an European electromagnetic waves emission and immunity party, regulations.

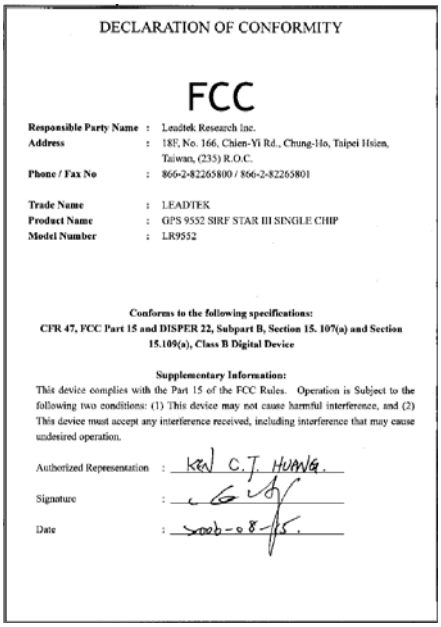

DECLARATION OF CONFORMITY

FCC

Responsible Party Name : Leadtek Research Inc.
Address : 18F, No. 166, Chien-Yi Rd., Chung-Ho, Taipei Hsien, Taiwan, (235) R.O.C.
Phone / Fax No : 866-2-82265800 / 866-2-82265801

Trade Name : LEADTEK
Product Name : GPS 9552 SIRF STAR III SINGLE CHIP
Model Number : LR9552

Conforms to the following specifications:
CFR 47, FCC Part 15 and DISPER 22, Subpart B, Section 15. 107(a) and Section 15.109(a), Class B Digital Device

Supplementary Information:
This device complies with the Part 15 of the FCC Rules. Operation is Subject to the following two conditions: (1) This device may not cause harmful interference, and (2) This device must accept any interference received, including interference that may cause undesired operation.

Authorized Representation : Ken C.T. HUANG.
Signature :
Date : 2006-08-15.

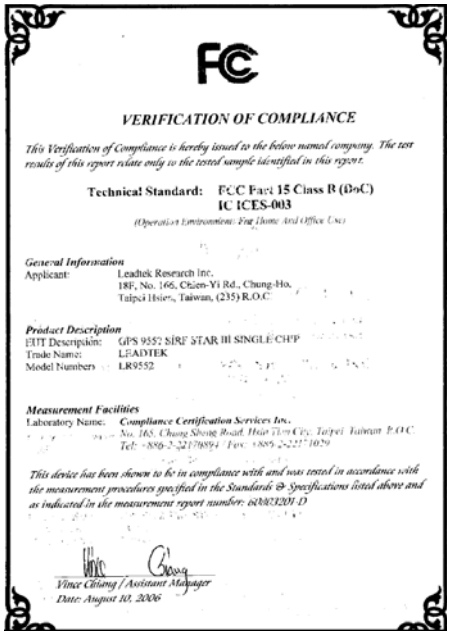

FC

VERIFICATION OF COMPLIANCE

This Verification of Compliance is hereby issued to the below named company. The test results of this report relate only to the tested sample identified in this report.

Technical Standard: FCC Part 15 Class B (DoC)
IC ICES-003
(Operation Environment: For Home And Office Use)

General Information
Applicant: Leadtek Research Inc.
18F, No. 166, Chien-Yi Rd., Chung-Ho, Taipei Hsien, Taiwan, (235) R.O.C

Product Description
EUT Description: GPS 9552 SIRF STAR III SINGLE CHIP
Trade Name: LEADTEK
Model Number: LR9552

Measurement Facilities
Laboratory Name: *Compliance Certification Services Inc.*
No. 165, Chung Sheng Road, Hsin Tien City, Taipei, Taiwan, R.O.C
Tel: +886-2-22170894 / Fax: +886-2-22171029

This device has been shown to be in compliance with and was tested in accordance with the measurement procedures specified in the Standards & Specifications listed above and as indicated in the measurement report number: 606032201-D

Vince Chiang / Assistant Manager
Date: August 10, 2006

CE

VERIFICATION OF COMPLIANCE

This Verification of Compliance is hereby issued to the below named company. The test results of this report relate only to the tested sample identified in this report.

Technical Standard: EMC DIRECTIVE 89/336/EEC (EN55022 / EN55024)
(Operation Environment: Information Technology Equipment)

General Information
Applicant: Leadtek Research Inc.
18F, No. 166, Chien-Yi Rd., Chung-Ho, Taipei Hsien, Taiwan, (235) R.O.C.

Product Description
EUT Description: GPS 9552 SIRF STAR III SINGLE CHIP
Trade Name: LEADTEK
Model Number: LR9552

Measurement Standard
EN 55022: 1998 + A1: 2000 + A2: 2003
EN 61000-3-2: 2000
EN 61000-3-3: 1995 + A1: 2001
EN 55024: 1998 + A1: 2001 + A2: 2003
(IEC 61000-4-2: 1995 + A1: 1998 + A2: 2000; IEC 61000-4-3: 2002 + A1: 2002;
IEC 61000-4-4: 1995 + A1: 2000 + A2: 2001; IEC 61000-4-5: 1995 + A1: 2000;
IEC 61000-4-6: 1996 + A1: 2000; IEC 61000-4-8: 1993 + A1: 2000; IEC 61000-4-11: 1994 + A1: 2000)

Measurement Facilities
Laboratory Name: *Compliance Certification Services Inc.*
No. 165, Chung Sheng Road, Hsin Tien City, Taipei, Taiwan, R.O.C.
Tel: +886-2-22170894 Fax: +886-2-22171029

This device has been shown to be in compliance with and was tested in accordance with the measurement procedures specified in the Standards & Specifications listed above and as indicated in the measurement report number: 606032201-E

Vince Chiang / Assistant Manager
Date: August 10, 2006

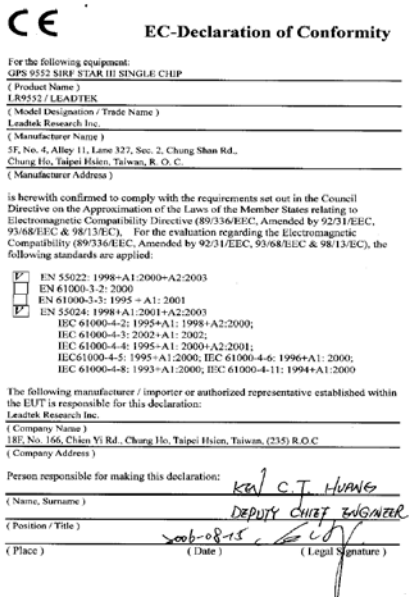

CE

EC-Declaration of Conformity

For the following equipment:
GPS 9552 SIRF STAR III SINGLE CHIP
(Product Name)
LR9552 / LEADTEK
(Model Designation / Trade Name)
Leadtek Research Inc.
(Manufacturer Name)
5F, No. 4, Alley 11, Lane 327, Sec. 2, Chung Shan Rd.,
Chung Ho, Taipei Hsien, Taiwan, R. O. C.
(Manufacturer Address)

is herewith confirmed to comply with the requirements set out in the Council Directive on the Approximation of the Laws of the Member States relating to Electromagnetic Compatibility Directive (89/336/EEC, Amended by 92/31/EEC, 93/68/EEC & 98/13/EC). For the evaluation regarding the Electromagnetic Compatibility (89/336/EEC, Amended by 92/31/EEC, 93/68/EEC & 98/13/EC), the following standards are applied:

- [x] EN 55022: 1998+A1:2000+A2:2003
- [ ] EN 61000-3-2: 2000
- [ ] EN 61000-3-3: 1995 + A1: 2001
- [x] EN 55024: 1998+A1:2001+A2:2003
  IEC 61000-4-2: 1995+A1: 1998+A2:2000;
  IEC 61000-4-3: 2002+A1: 2002;
  IEC 61000-4-4: 1995+A1: 2000+A2:2001;
  IEC61000-4-5: 1995+A1:2000; IEC 61000-4-6: 1996+A1: 2000;
  IEC 61000-4-8: 1993+A1:2000; IEC 61000-4-11: 1994+A1:2000

The following manufacturer / importer or authorized representative established within the EUT is responsible for this declaration:
Leadtek Research Inc.
(Company Name)
18F, No. 166, Chien Yi Rd., Chung Ho, Taipei Hsien, Taiwan, (235) R.O.C
(Company Address)

Person responsible for making this declaration:
Ken C.T. HUANG
(Name, Surname)
DEPUTY CHIEF ENGINEER
(Position / Title)
2006-08-15
(Place) (Date) (Legal Signature)

Please note that the compliances of this device are for this SMD module itself only. The complete system compliance must be examined and certified whenever you put this SMD inside.

© 2006 Leadtek Research Inc. All rights reserved.
Preliminary Confidential - Information is subject to change without prior notice.

3. Performance Characteristics

3.1. Position and velocity accuracy

Accuracy	Position	10 meters, 2D RMS 5 meters 2D RMS, WAAS corrected <5meters(50%).
	Velocity	0.1 meters/second
	Time	1 microsecond synchronized to GPS time

3.2. Dynamic constrains

Dynamic Conditions	Altitude	18,000 meters (60,000 feet) max.
	Velocity	515 meters/second (1000 knots) max.
	Acceleration	4g, max.
	Jerk	20 meters/second^3, max.

3.3. Acquisition time [1]

Mode	Leadtek 9552 GPS Module
TTFF Hot (valid almanac, position, time & ephemeris)	1 s
TTFF Warm (valid almanac, position, & time)	38 s
TTFF Cold (valid almanac)	42 s
re-acquisition (<10 s obstruction with valid almanac, position, time & ephemeris)	100 ms

Note 1: Open Sky and Stationary Environments.

© 2006 Leadtek Research Inc. All rights reserved.
Preliminary Confidential - Information is subject to change without prior notice.

3.4. Timing 1PPS output

The 1PPS pulse width is 1 μs, this 1PPS is NOT suited to steer various oscillators (timing receivers, telecommunications system, etc).

3.5. Sensitivity

Parameter	Description
Tracking Sensitivity	-158 dBm
Acquisition Sensitivity	-142 dBm

© 2006 Leadtek Research Inc. All rights reserved.
Preliminary Confidential - Information is subject to change without prior notice.

4. Hardware Interface Power supply

Parameter	Leadtek 9552 GPS Module
Input voltage	3.2 ~ 5.0V DC input.
Current (typ) at full power (3.3V)	55mA
Battery backup voltage	1.65 ~ 5.0V DC input.

4.1. Specifications

I. Pin Positions

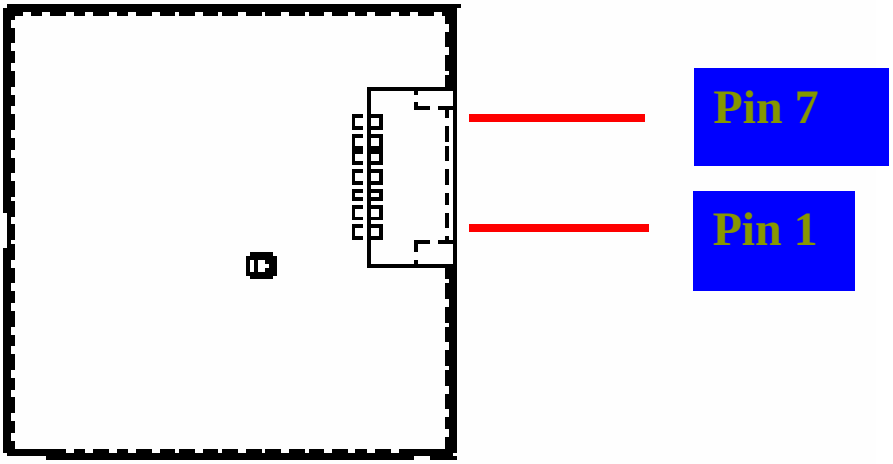

© 2006 Leadtek Research Inc. All rights reserved.
Preliminary Confidential - Information is subject to change without prior notice.

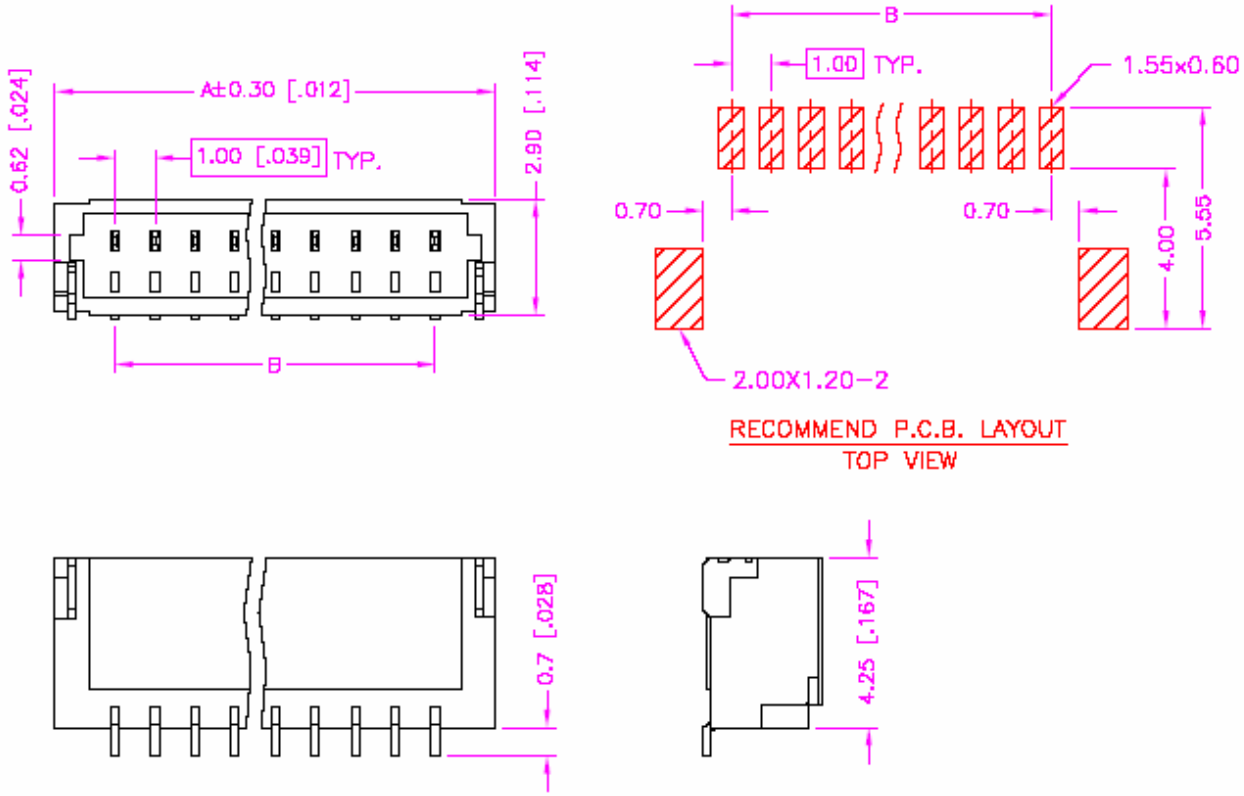

II. Pin Assignment

Pin No.	Define	Pin No.	Define
1	GND	5	RXDB
2	TXDA	6	TIMEMARK
3	RXDA	7	VCC_5V
4	TXDB		

© 2006 Leadtek Research Inc. All rights reserved.
Preliminary Confidential - Information is subject to change without prior notice.

5. Software interface

The host serial I/O port of the module's serial data interface supports full duplex communication between the module and the user. The default serials are shown in Table 5-1.

Port	Protocol	Description
Port A	NMEA 0183, 9600 bps	GGA, GSA, GSV, GLL, RMC, VTG
Port B	N/A	N/A

Table 5-1 Leadtek 9552 GPS module default baud rates

The Leadtek LR9552 module includes GSW3 high sensitivity software solution.

Features include:

- λ High tracking sensitivity
- λ High configurability
- λ 1 Hz position update rate
- λ Real-time Operating System (RTOS) friendly
- λ Capable of outputting both NMEA and SiRF-proprietary binary protocols
- λ Designed to accept custom user tasks executed on the integrated ARM7TDM1 processor
- λ Runs in full power operation or optional power saving modes

GSW3 default configuration is as follows:

Item	Description
Core of firmware	GSW3.2 serial
Baud rate	4800, 9600, 19200, 38400 or 57600 bps (default 4800)
Code type	NMEA-0183 ASCII
Datum	WGS-84
Protocol message	GGA(1sec), GSA(5sec), GSV(5sec), RMC(1sec),VTG(1sec)
Output frequency	1 Hz

© 2006 Leadtek Research Inc. All rights reserved.
Preliminary Confidential - Information is subject to change without prior notice.

6. Mechanical drawing and footprint

6.1. Outline Drawing

Items	Description
Length	25.0 ± 0.3 mm
Width	24.0 ± 0.3 mm
Height	8.90 ± 0.3 mm 6.90 ± 0.3 mm

(4mm patch antenna)

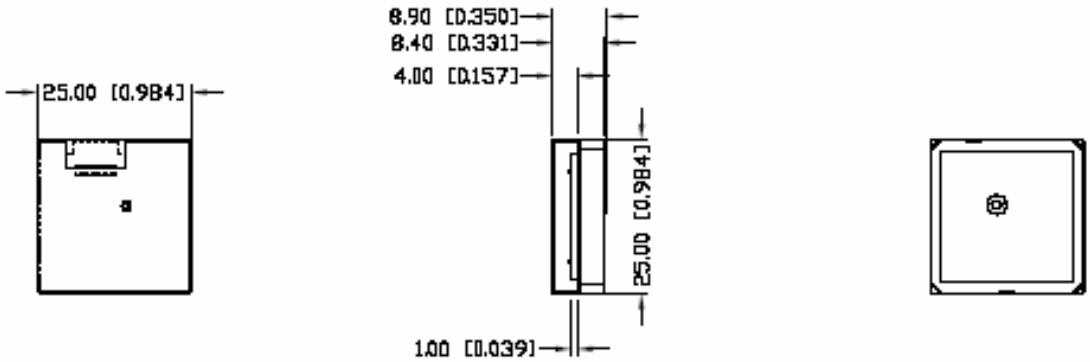

(2mm patch antenna)

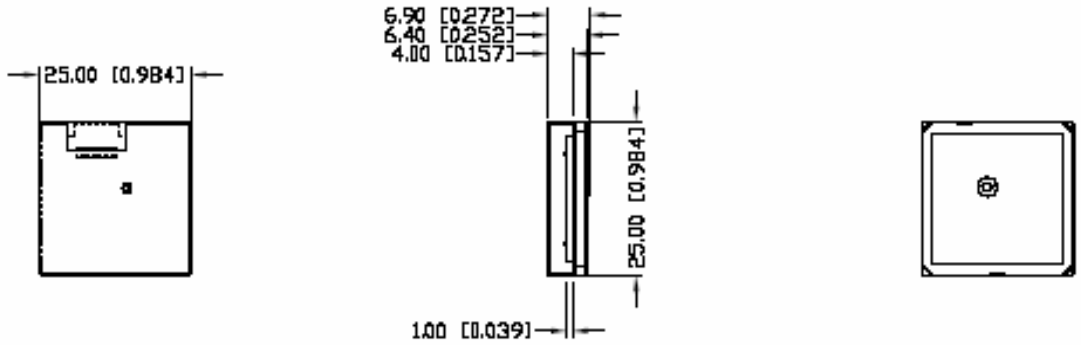

© 2006 Leadtek Research Inc. All rights reserved.
Preliminary Confidential - Information is subject to change without prior notice.

7. Package

7.1. Package specifications

Tolerance: ±10mm

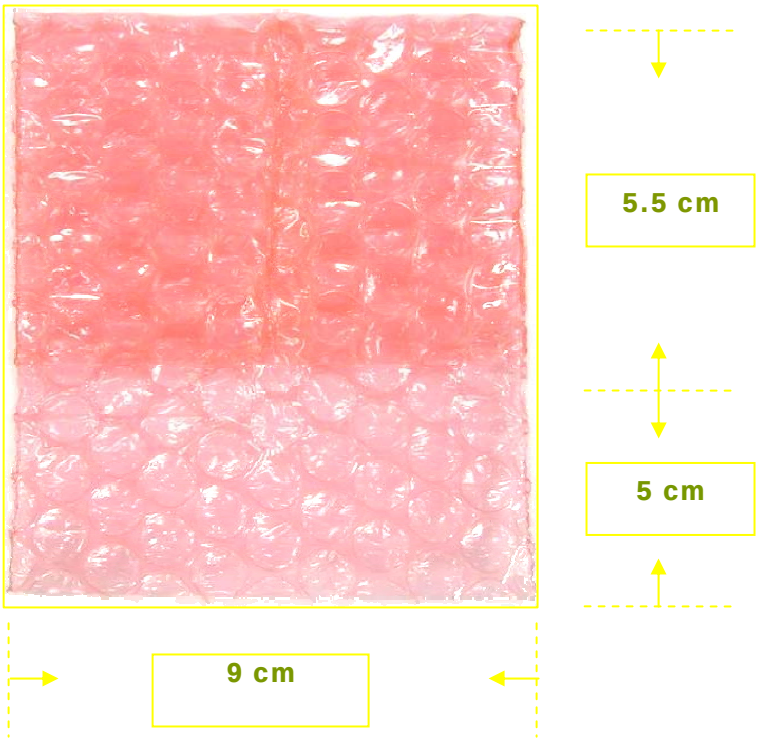

λ Electric Specification: Surface impedance

λ Relative humidity: 50%

λ Relative temperature: 24℃ ~ 28℃

λ Bubble diameter: 1cm

λ Color: pink

λ With SGS Test Report

λ Dimension: 90mm(W) x 55mm + 50mm (L)

© 2006 Leadtek Research Inc. All rights reserved.
Preliminary Confidential - Information is subject to change without prior notice.

8. RoHS compliant information

By July 1, 2006, all electronic products sold in the EU must be free of hazardous materials, such as lead. Leadtek is filly committed to being one of the first to introduce lead-free GPS Products while maintaining backwards compatibility and focusing on a continuously high level of product and manufacturing quality.

8.1. RoHS soldering profile

Reflow Profile

High quality, low defect soldering requires identifying the optimum temperature profile for reflowing the solder paste. To have the correct profile assures components, boards, and solder joints are not damaged and reliable solder connection is achievable. Profiles are essential for establishing and maintaining processes. You must be able to repeat the profile to achieve process consistency. The heating and cooling rise rates must be compatible with the solder paste and components. The amount of time that the assembly is exposed to certain temperatures must first be defined and then maintained. The following is an example of a typical thermal profile.

Setpoints (Celsius)

Zone	1	2	3	4	5	6	7	8	9
Top	260	240	210	200	210	230	250	255	260
Bottom	260	240	210	200	210	230	250	255	260

Conveyor Speed (inch/min): 27.6

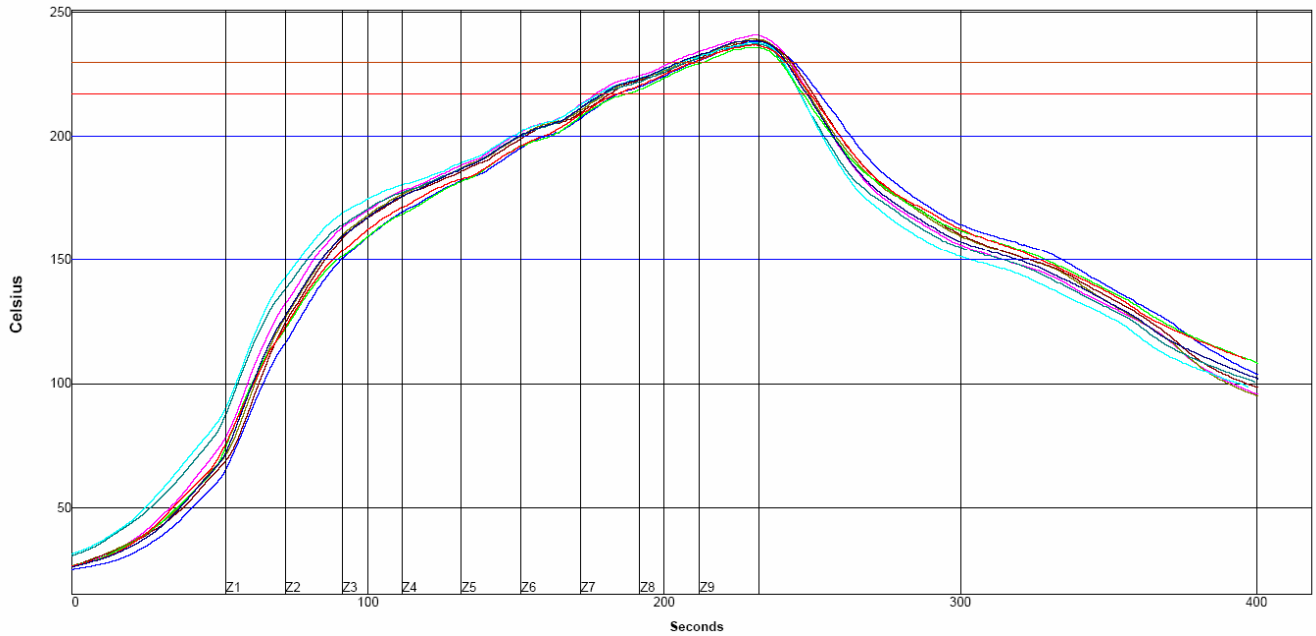

© 2006 Leadtek Research Inc. All rights reserved.
Preliminary Confidential - Information is subject to change without prior notice.

Glossary

A-GPS

Assisted GPS or AGPS is a technology that uses an assistance server to cut down the time needed to find the location. Although GPS provides excellent position accuracy, position fixes require lines of sight to the satellites. In regular GPS networks there are only GPS satellites and GPS receivers. In A-GPS networks, the receiver, being limited in processing power and normally under less than ideal locations for position fixing, communicates with the assistance server that has high processing power and access to a reference network. Although dependent on cellular coverage, AGPS processing is quicker and more efficient than regular GPS.

API

An application programming interface is a set of definitions of the way one piece of computer software communicates with another. One of the primary purposes of an API is to provide a set of commonly used functions, such as to draw windows or icons on the screen. Programmers can then take advantage of the API by making use of its functionality, saving them the task of programming everything from scratch.

Baud Rate

Is a measure of the signaling rate, which is the number of changes to the transmission media per second in a modulated signal.
For Example: 250 baud means that 250 signals are transmitted in one second. If each signal carries 4 bits of information then in each second 1000 bits are transmitted. This is abbreviated as 1000 bit/s.

Dead Reckoning

The process of estimating your position by advancing a known position using course, speed, time and distance to be traveled. It is figuring out where you will be at a certain time if you hold the speed, time and course you plan to travel.

Differential GPS (DGPS)

An extension of the GPS system that uses land-based radio beacons to transmit position corrections to GPS receivers. DGPS reduces the effect of selective availability, propagation delay, etc. and can improve position accuracy to better than 10 meters.

EGNOS

A satellite navigation system being developed by the European Space Agency, the European Commission, and EUROCONTROL. It is intended to supplement the GPS and GLONASS systems by reporting on the reliability and accuracy of the signals. According to specifications, horizontal position accuracy should be better than 7 meters. In practice, the horizontal position accuracy is at the meter level. It will consist of three geostationary satellites and a network of ground stations.
Similar service is provided in America by the WAAS system. See WAAS.

© 2006 Leadtek Research Inc. All rights reserved.

Preliminary Confidential - Information is subject to change without prior notice.

European Geostationary Navigation Overlay System

See EGNOS.

LNA

A special type of electronic amplifier or amplifier used in communication systems to amplify very weak signals captured by an antenna. It is usually located at the antenna and is a key component, which is placed at the front-end of a receiver system.

Low Noise Amplifier

See LNA.

Multi-path mitigation

Anticipating errors caused when a satellite signal reaches the GPS receiver antenna by more than one path. Usually caused by one or more paths being bounced or reflected off of structures near the antenna and occurs to some extent everywhere. The signal which traverses a longer path will yield a larger pseudo range estimate and increase the error.

NMEA

An U.S. standards committee that defines data message structure, contents, and protocols to allow the GPS receiver to communicate with other pieces of electronic equipment.

National Marine Electronics Association

See NMEA.

1PPS

Pulse which is generated once per second. GPS and some radio clocks and related timekeeping gear have a pulse-per-second or PPS signal that is needed for high accuracy time synchronization. The PPS signal can be connected in either of two ways, either through the data leads of a serial port or through the modem control leads. Either way requires conversion of the PPS signal,
Most GPS devices emit an rs-232 serial stream with some kind of timestamp format. Many GPS devices are small realtime systems with the satellite tracking done at high priority, positioning done at medium priority, and time output done at low priority. The timestamps often have +- 200 ms of jitter (variance in delay), and output a PPS signal on the exact second.

SMD

Electronic device components that are mounted directly onto the surface of printed circuit boards (PCBs). In the industry it has largely replaced the previous construction method of fitting components with wire leads into holes in the circuit board (also called through-hole technology).

© 2006 Leadtek Research Inc. All rights reserved.

Preliminary Confidential - Information is subject to change without prior notice.

Surface Mount Device

See SMD.

TCXO

An electronic device that uses the mechanical resonance of a physical crystal to create an electrical signal with a very precise frequency and can be embedded in integrated circuits. TCXO reduces the environmental changes of temperature, humidity, and vibration, to keep a stable output frequency.

Temperature Controlled Crystal Oscillator

See TCXO.

Time To First Fix (TTFF)

The time it takes a GPS receiver to find satellites after you first turn it on, when the GPS receiver has lost memory, or has been moved over 300 miles from its last location. Standard TTFF Timing consists of:

Mode	Requires	Timing
Snap Start	Hot + Clock + Sat Pos	3 minutes off
Hot Start	Warm + Ephemeris	30 minutes off
Warm Start	Position Accuracy	<500 KM
	Time Accuracy	<2 hours
	Almanac	<1 year
Cold Start	Nothing	N/A

Specifications are typical times assuming good satellite visibility and above threshold signal strengths.

WAAS

A system of satellites and ground stations that provide GPS signal corrections for better position accuracy. A WAAS-capable receiver can give you a position accuracy of better than three meters, 95 percent of the time. (At this time, the system is still in the development stage and is not fully operational.) WAAS consists of approximately 25 ground reference stations positioned across the United States that monitor GPS satellite data. Two master stations, located on either coast, collect data from the reference stations and create a GPS correction message.

Wide Area Augmentation System

See WAAS.

© 2006 Leadtek Research Inc. All rights reserved.
Preliminary Confidential - Information is subject to change without prior notice.

Leadtek Research Inc.
18F, 166, Chien-Yi Rd.,
Chung Ho, Taipei Hsien,
Taiwan (235)

©2006 Leadtek Research, Inc.
All rights reserved.

Version 0.4
Mar. / 2007