Service Manual

TOP NEXT

ORDER NO. MD0011177C1

A6

Service Manual

CD Stereo System

COMPACT disc DIGITAL AUDIO

- SA-AK33

Chassis

Colour

(S)... Silver Type

Area

(P)... U.S.A.

(PC)... Canada

TAPE SECTION :

SG2 MECHANISM SERIES

CD SECTION :

RAE0152Z-3 TRAVERSE DECK SERIES



Specifications

AMPLIFIER SECTION	
Power output	
THD 10% Total harmonic distortion	
(HIGH)	35-40 W per channel (6Ω)
(LOW)	85-90 W per channel (6Ω)
(TOTAL)	120-130 W per channel
Input sensitivity	
AUX	250 mV
Input Impedance	
AUX	13 kΩ
FM TUNER SECTION	
Frequency range	87 9 - 107 9 MHz (200 kHz steps)
	87 5 - 108 0 MHz (100 kHz steps)
Sensitivity	2 5µV (IHF)
S/N 26 dB	2 2µV
Antenna terminal(s)	75Ω (unbalanced)
AM TUNER SECTION	
Frequency range	520 - 1710 kHz (10 kHz steps)
Sensitivity	
S/N 20 dB (at 1000 kHz)	560µV/m
CASSETTE DECK SECTION	
Track system	4 track, 2 channel
Heads	
Record/playback	Solid permalloy head
Erasure	Double gap ferrite head
Motor	DC servo motor
Recording system	AC bias 100 kHz
Erasing system	AC erase 100 kHz
Tape speed	4 8 cm/s
Frequency response (+3 dB, -6 dB at DECK OUT)	
NORMAL (TYPE I)	35 Hz - 14 kHz
HIGH (TYPE II)	35 Hz - 14 kHz
S/N	50 dB (A weighted)
Wow and flutter	0 18% (WRMS)
Fast forward and rewind time	Approx 120 seconds with

9.1 Self-diagnostic display

This unit is equipped with a self-diagnostic display function which, if a problem occurs, will display an error code corresponding to the problem.

Use this function when performing maintenance on the unit.

9.2 How to enter the Self-Diagnostic Function

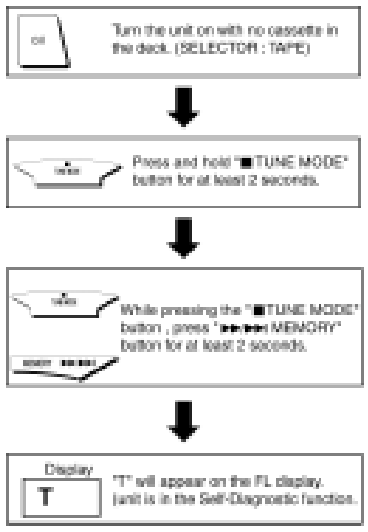

TOP PREVIOUS NEXT

9.3 Cassette Mechanism Test (For error code H01, H02, H03, F01, F02)

1. Press “TAPE, DECK 1/2” to select Deck 2.
2. Load a cassette tape with the erasure prevention tab, remove from left side only and close the cassette holder.
3. Press “FAST FORWARD MEMORY” (Tape will be stop after 2 seconds)
4. Load a cassette tape with the erasure prevention tab, remove from right side only and close the cassette holder.
5. Press “REVERSE FM MODE/BP” (Tape will be stop after 2 seconds)
6. Load a pre-recorded tape with both side record tabs intact and close the cassette holder.
7. Press “PLAY/TUNE/TIME ADJ UP” (After TPS function, tape will stop automatically)
8. Press “REC/STOP” (Tape will not move)
9. Press “STOP/TUNE MODE” to indicate Error code.
   - If several problem exist, error code will change each time when “ /TUNE MODE” is pressed.

     (e.g. H01 → H03 → F01 .....etc.)
10. Press “TAPE, DECK 1/2” to select Deck 1.
11. Repeat step 2 to 9 to test Deck 1. (Tape Deck 1 will not check H02 because of no recording function)

9.4 CD Mechanism Test (F15, F26, F16, F17, F27, F28, F29, H15)

TOP PREVIOUS NEXT

1. Press “CD”.
2. Press “OPEN/CLOSE (1)” and place a CD.
3. Press “OPEN/CLOSE (1)” to close the tray.
4. Press “OPEN/CLOSE (5)” and wait until the tray is open.
5. Press “OPEN/CLOSE (1)” and remove the CD.
6. Press “OPEN/CLOSE (1)” to close the tray.
7. Press “ /TUNE MODE” to indicate Error Code.
    - If several problem exist, error code will change each time when “ /TUNE MODE” is pressed. (e.g. F15 → F26 → F16 ....etc).

TOP PREVIOUS NEXT

SCHEMA99

9.5 To clear all Error code

1. Press “STOP/TUNE MODE” button for 5 seconds.
2. FL indicator shows “CLEAR” for 1 second and change to “T”.

9.6 How to get out from Self-Diagnostic function

1. Press “Power” button OFF.

9.7 Power Amplifier Failure (F61)

1. When power amplifier fail, F61 will indicate automatically.

10.1 Error detection for Cassette Mechanism block

No.	Error	ErrorDisplay	Problem condition
1	MODE SWdetection error	H01	Faulty operation of cassette mechanism.Faulty contact or short-circuit of mechanism mode switch (S951, S971).
2	REC INH SWdetection error	H02	Recording not possible.Faulty contact or short-circuit of REC INH switch (S974, S975).
3	HALF SWdetection error	H03	Playback cannot perform.Faulty contact or short-circuit of HALF siwtch (S952, S972).
4	Reel Pulsedetection error	F01	The tape advances slightly and then stops.Faulty reel pulse, faulty hole detect IC (IC951, IC971).
5	TPS abnormal	F02	Cassette deck will not perform TPS function.Faulty playback EQ/recording amplifier IC (IC101).

TOP PREVIOUS NEXT

TOP PREVIOUS NEXT

10.2 Error detection for CD/Changer block

No.	Error	ErrorDisplay	Problem condition
1	REST SW detection error	F15	CD does not function.This error occurs when the Optical Pick Up REST SW (S701) is not detected within the specified time (about 8 seconds)
2	CD tray opens automatically	F16	CLAMP switch (S4) NG (Check & Replace)
3	Does not startup when [PLAY]button is pressed	F17	BOTTOM switch (S5) NG (Check & Replace)
4	Transmission error between CDservo LSI and micon	F26	CD does not function.This error occurs when the POWER is ON for the CD block and an error is detected after the transmission has started.
5	Startup fails even when youinsert CD or the selected disc tray does not open	F27	Tray 1 detect switch or Tray 2 detect switch NG (Check & Replace)
6	Cannot insert CD	F28	Tray 1 detect switch NG (Check & Replace)
7	Cannot eject CD	F29	Check if disc is stuck. Tray 2 detect switch NG (Confirm & Replace)
8	The CD tray closes	H15	CD disc tray detect switch NG (S3) (Check & Replace)

10.3 Power Supply related error detection

TOP PREVIOUS NEXT

No.	Error	ErrorDisplay	Problem condition
1	POWER AMPoutput abnormal	F61	When POWER is switched on, power become off automatically.During normal operation, if DC DET become L, PCNT shall become L and the error display on the left shall be displayed. (IC501)

TOP PREVIOUS NEXT

11.1 How to set CD test mode

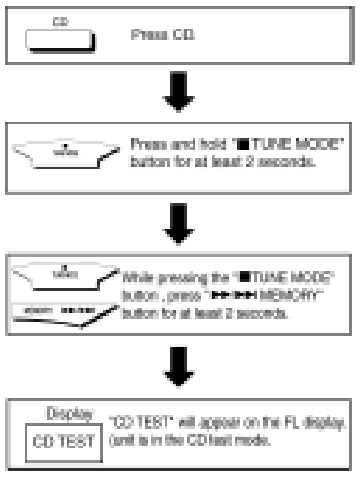

TOP PREVIOUS NEXT

TOP PREVIOUS NEXT

11.2 CD Automatically Adjustment result indication

Under CD test mode, pressing the numeric key ‘0’ on the remote controller will display the auto adjustment result. FLOCK, TLOCK and CLVS status shall be shown as below:



During the above display, executing CD PLAY will display auto adjustment result for CD PLAY mode.

TOP PREVIOUS NEXT

19 Troubleshooting Guide

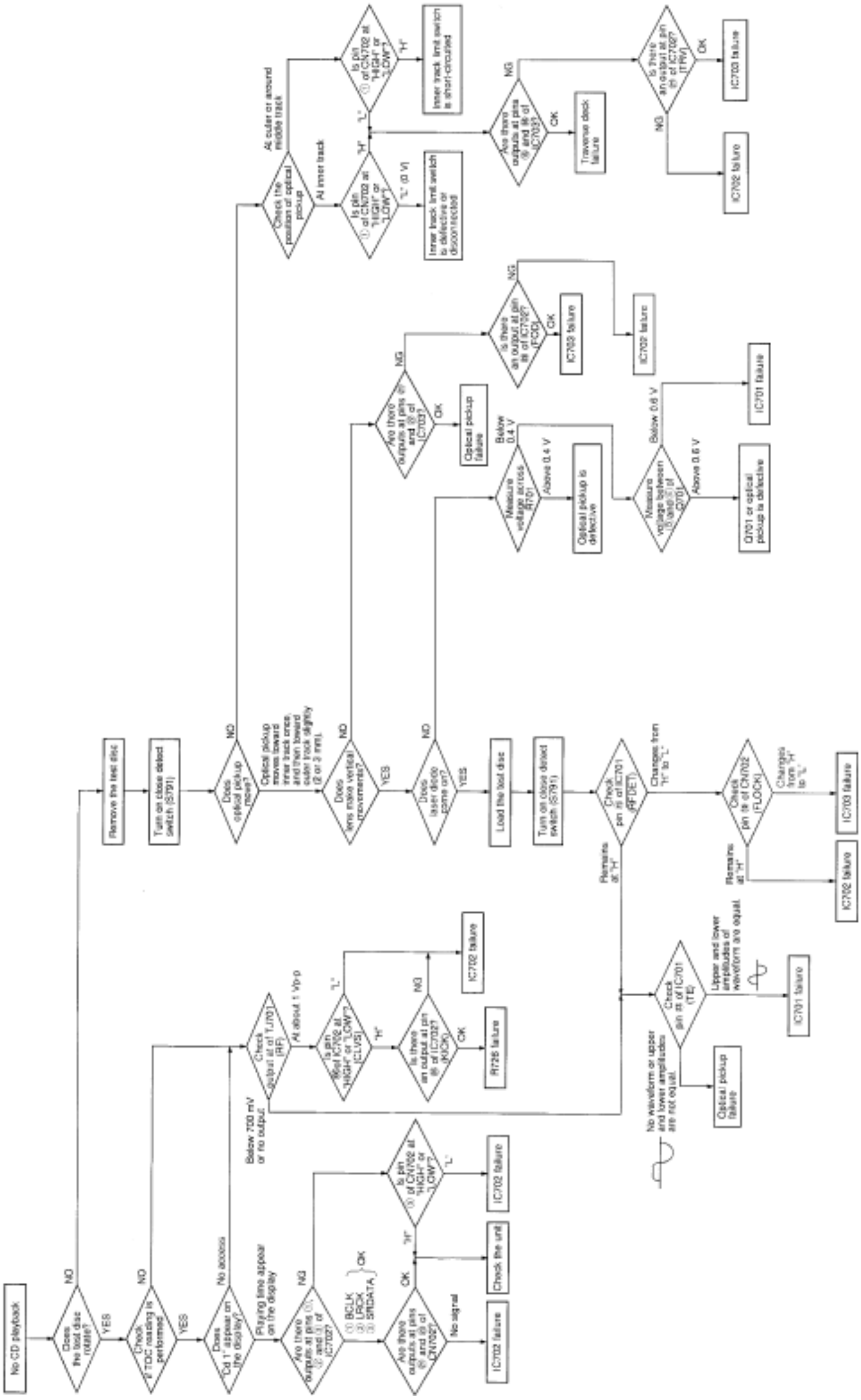

SCHEMATIC DIAGRAM -1

—— : +B SIGNAL LINE – – : +B SIGNAL LINE : CD SIGNAL L NE

A CD SERVO CIRCUIT

OPTICAL PICKUP CIRCUIT

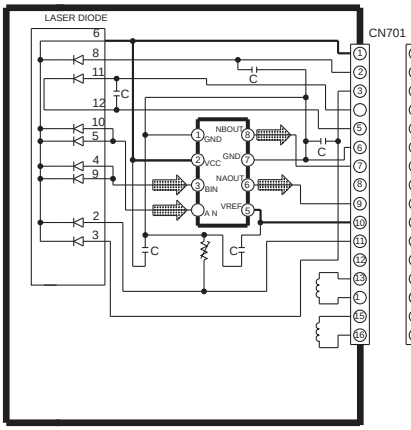

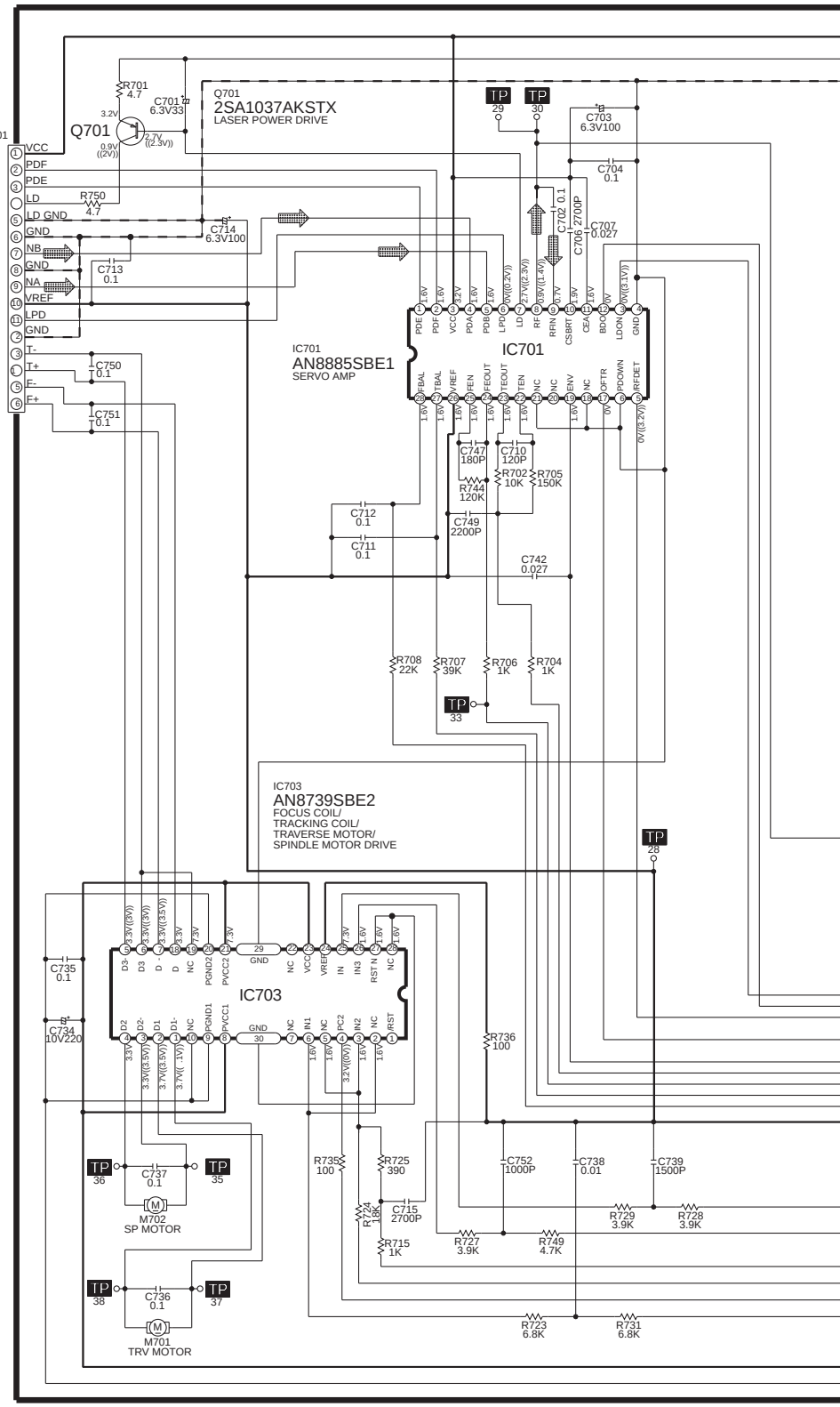

SCHEMATIC DIAGRAM - 2

—— : +B SIGNAL LINE – – : +B SIGNAL LINE : CD SIGNAL LINE

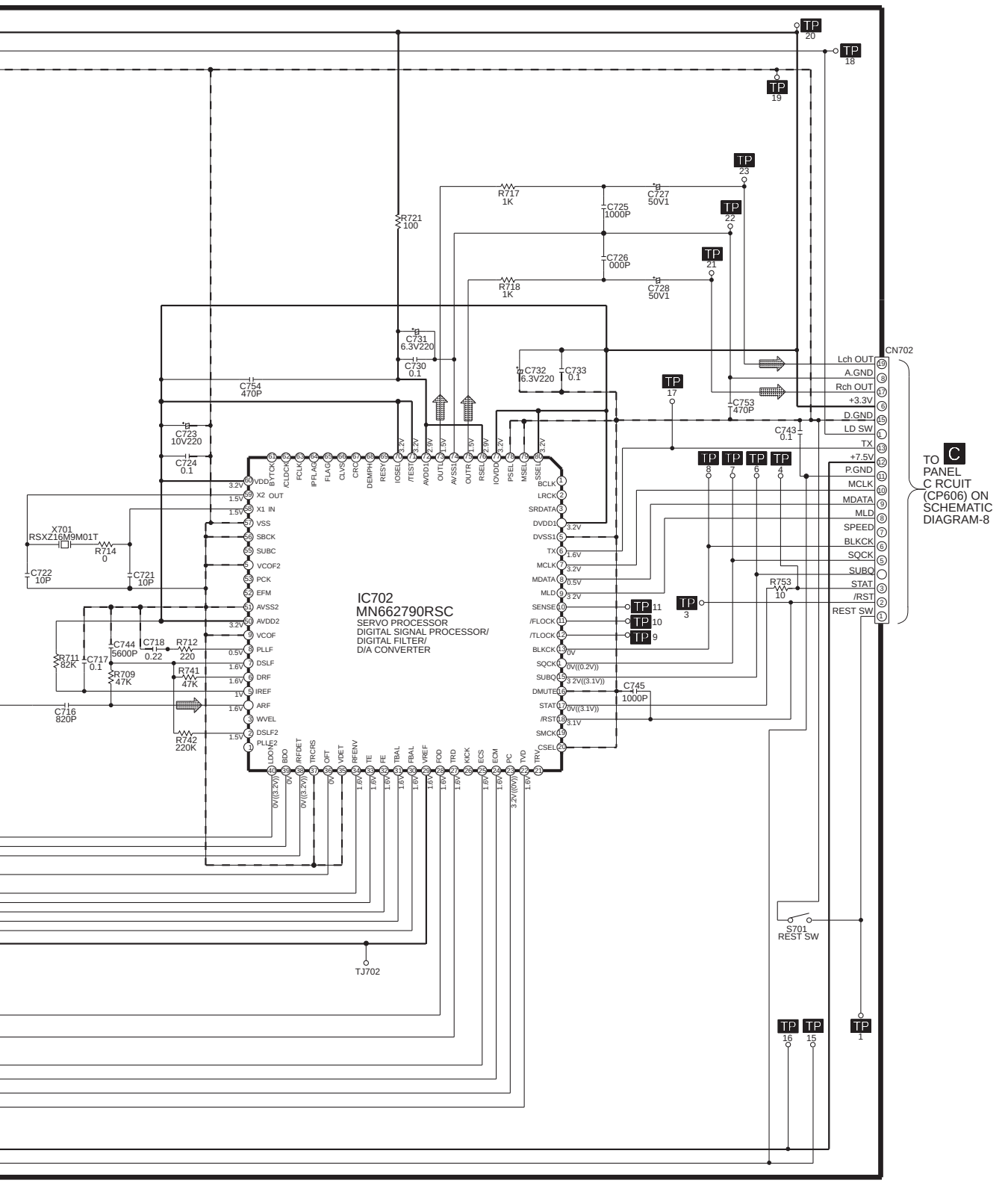

SCHEMATIC DIAGRAM - 9

—— : +B SIGNAL LINE
– – : -B SIGNAL LINE
: PLAYBACK SIGNAL LINE
: RECORD SIGNAL LINE

K DECK CIRCUIT

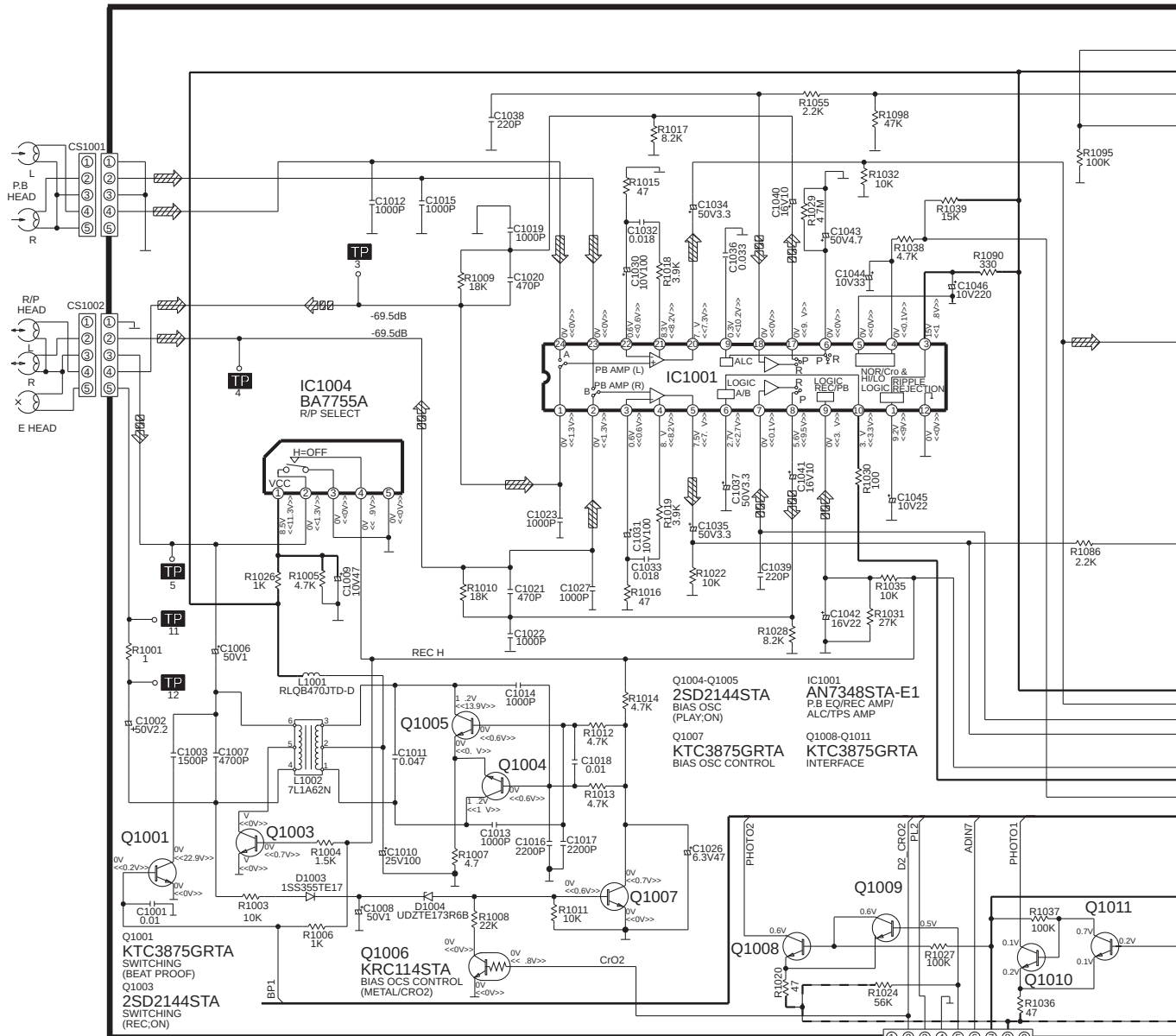

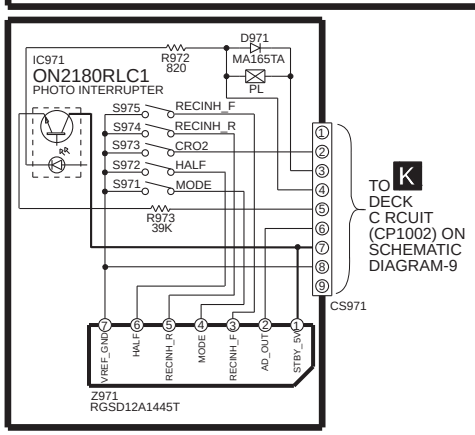

E MECHANISM CIRCUIT (DECK 2)

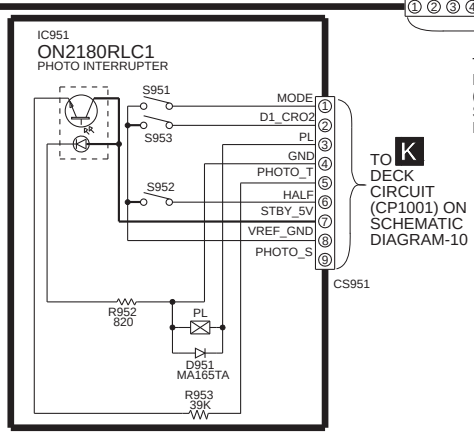

F MECHANISM CIRCUIT (DECK 1)

SCHEMATIC DIAGRAM - 10

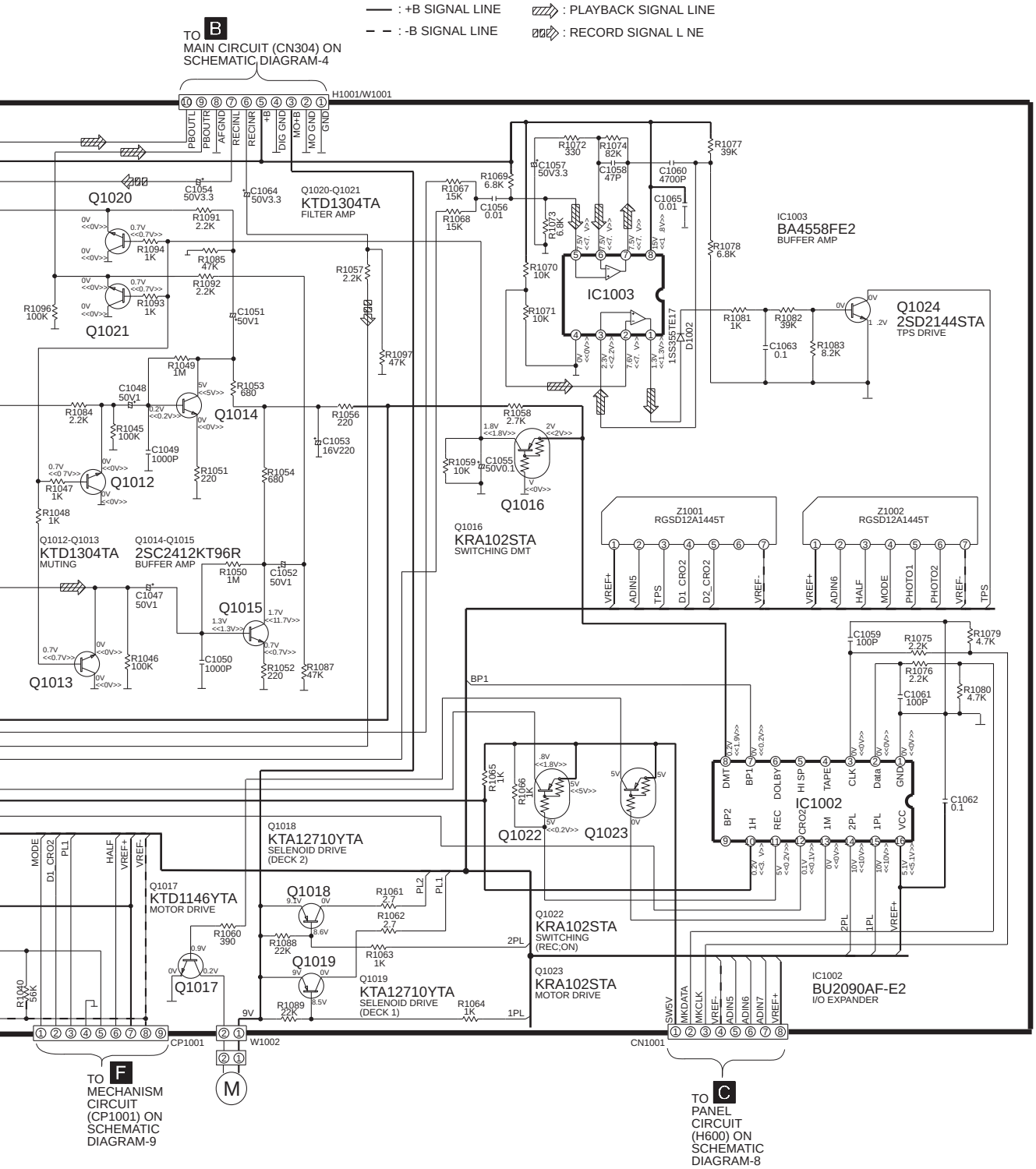

SCHEMATIC DIAGRAM - 4

: +B SIGNAL L NE
: -B SIGNAL LINE
: MA N SIGNAL LINE
: CD SIGNAL LINE
: FM/AM SIGNAL L NE
: RECORD SIGNAL LINE

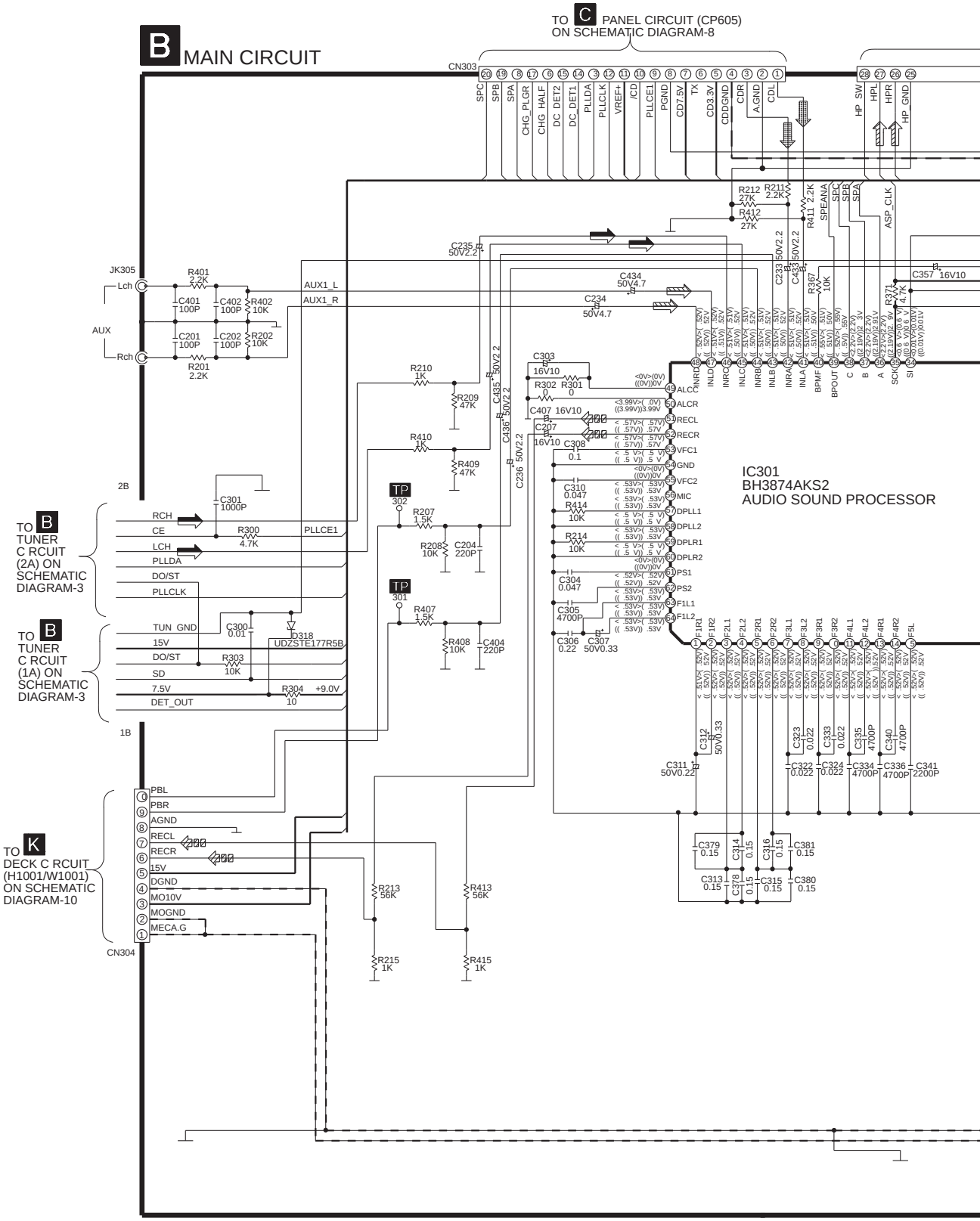

SCHEMATIC DIAGRAM - 5

—— : +B SIGNAL LINE – – : -B SIGNAL LINE ⇒ : MA N SIGNAL LINE

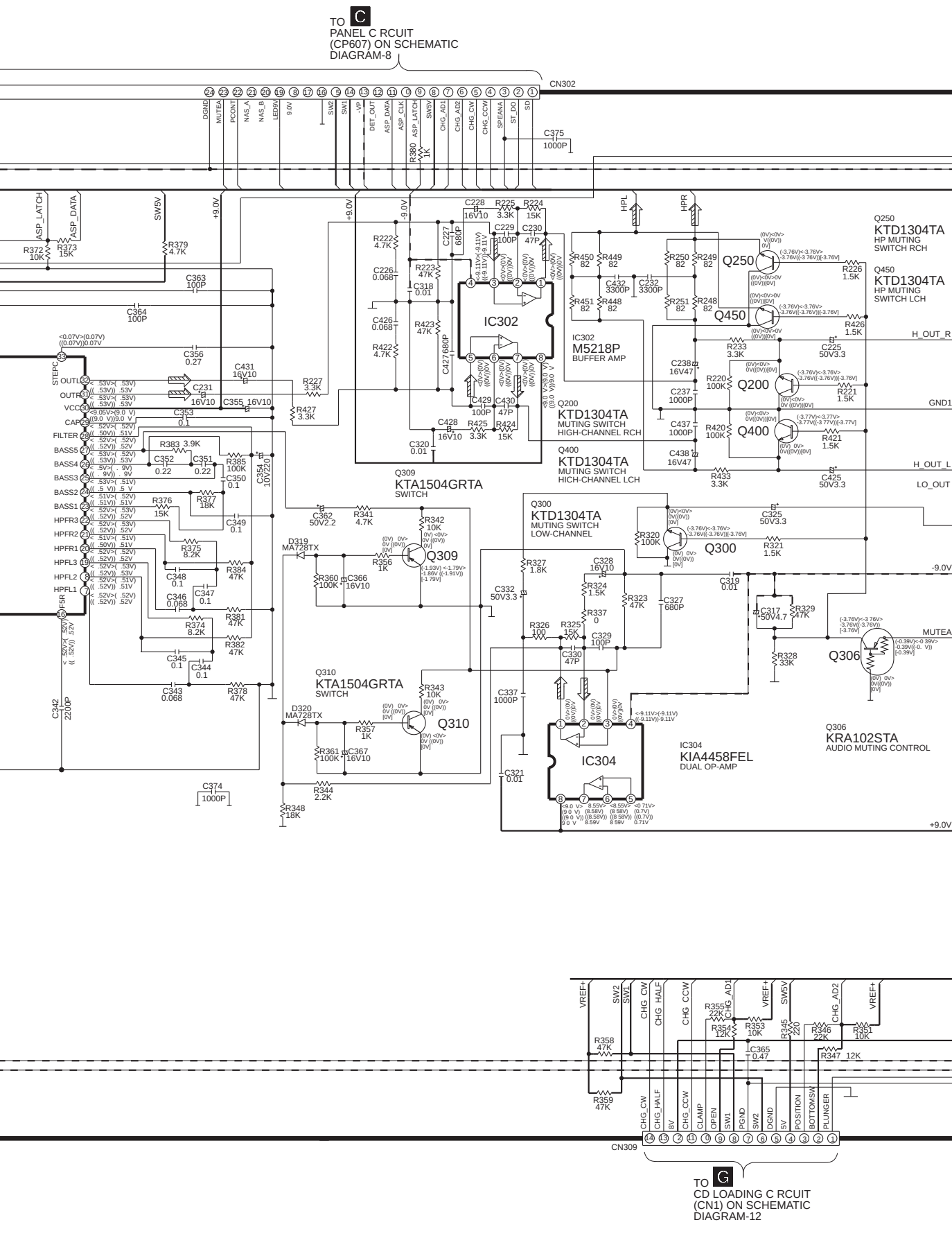

SCHEMATIC DIAGRAM - 6

—— : +B SIGNAL LINE – – : -B SIGNAL LINE ⇒ : MAIN SIGNAL LINE

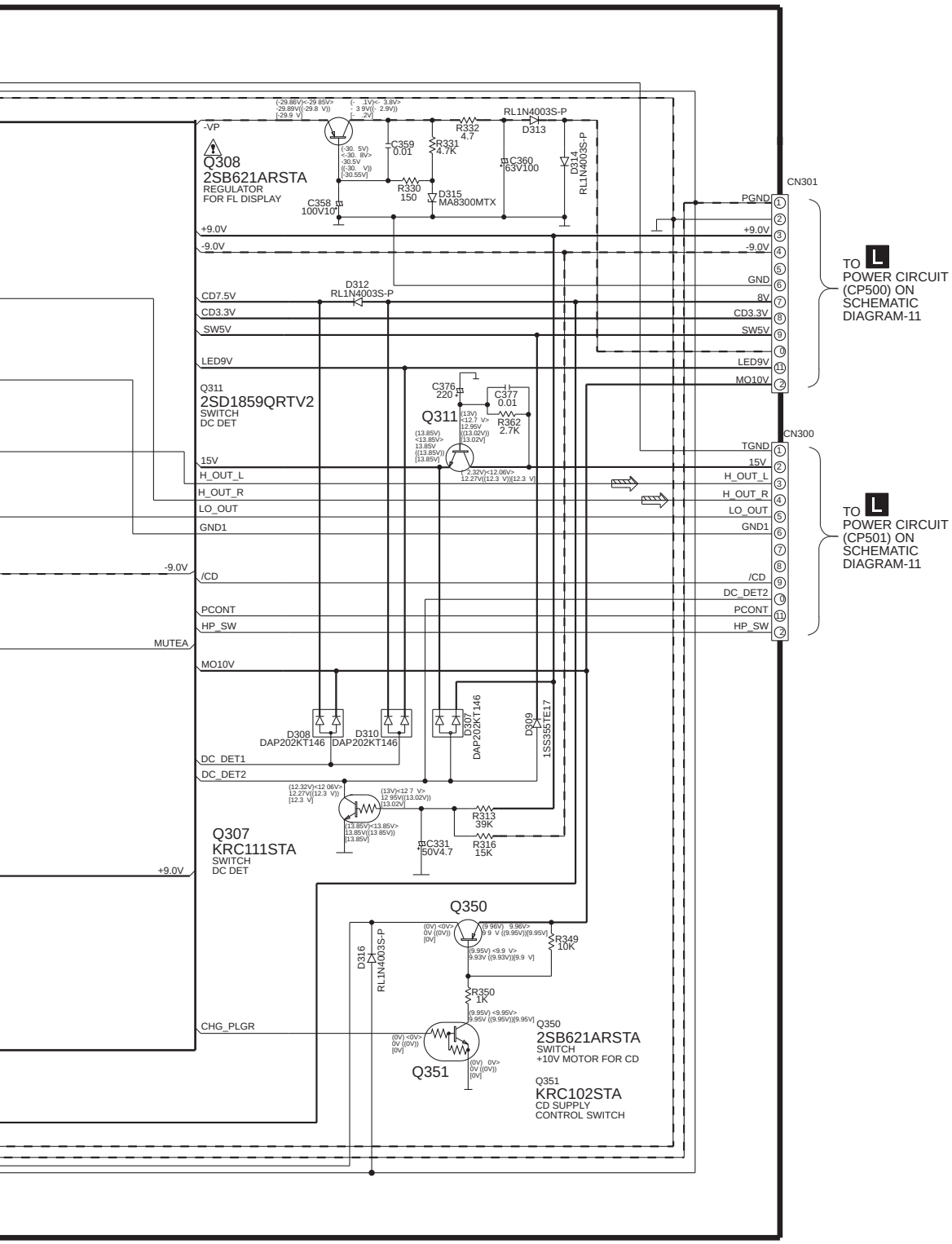

SCHEMATIC DIAGRAM - 7

—— : +B SIGNAL L NE : MA N SIGNAL LINE : CD SIGNAL LINE

C PANEL CIRCUIT

P TACT SWITCH (1) CIRCUIT

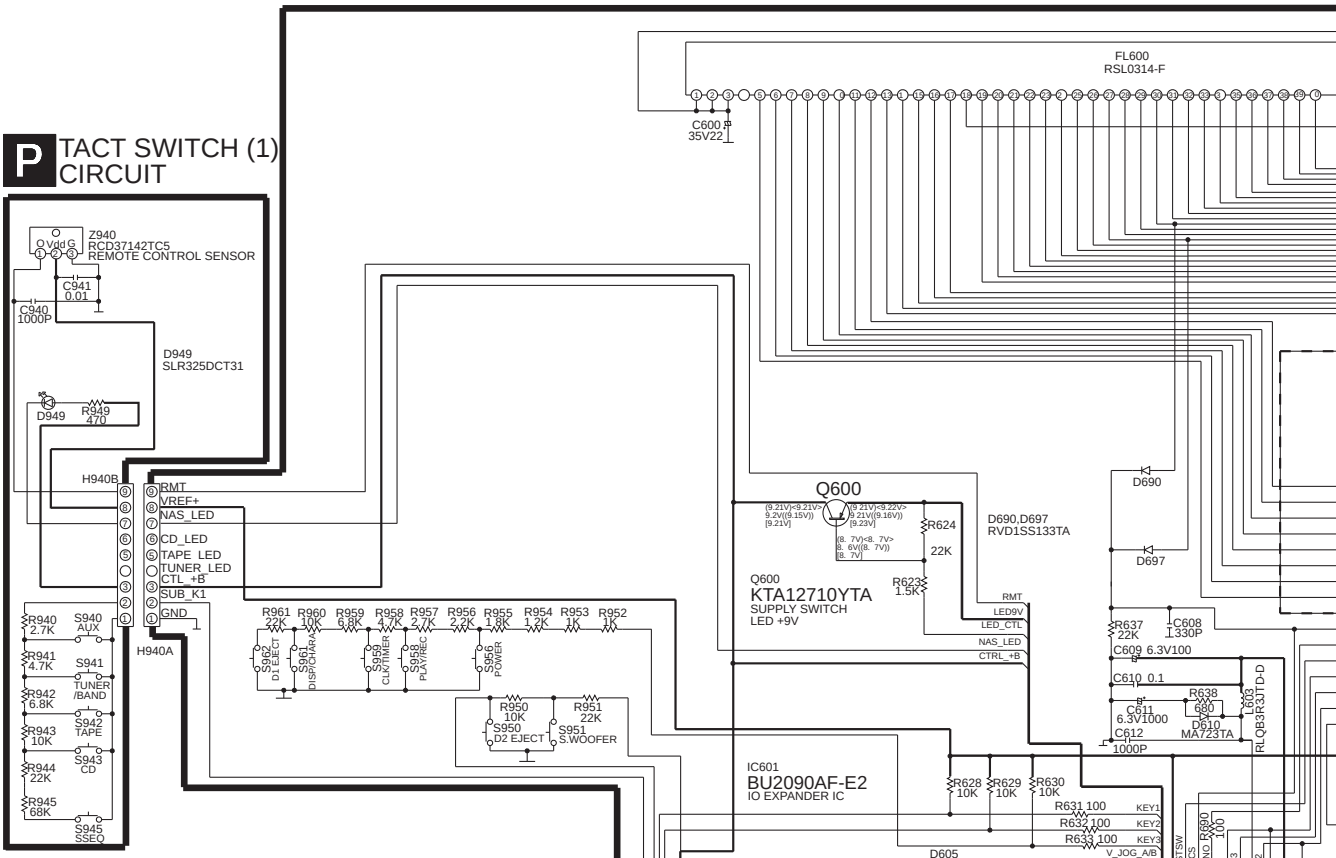

D TACT SWITCH (2) CIRCUIT

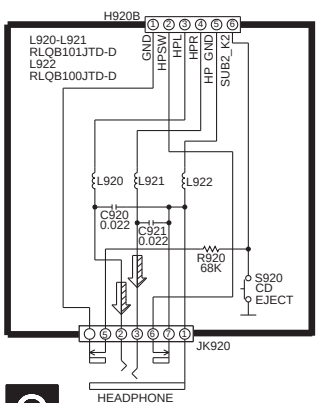

O HEADPHONE CIRCUIT

SCHEMATIC DIAGRAM - 8

—— : +B SIGNAL LINE ⇨ : MAIN SIGNAL LINE

– – : -B SIGNAL LINE ⇨ : CD SIGNAL L NE

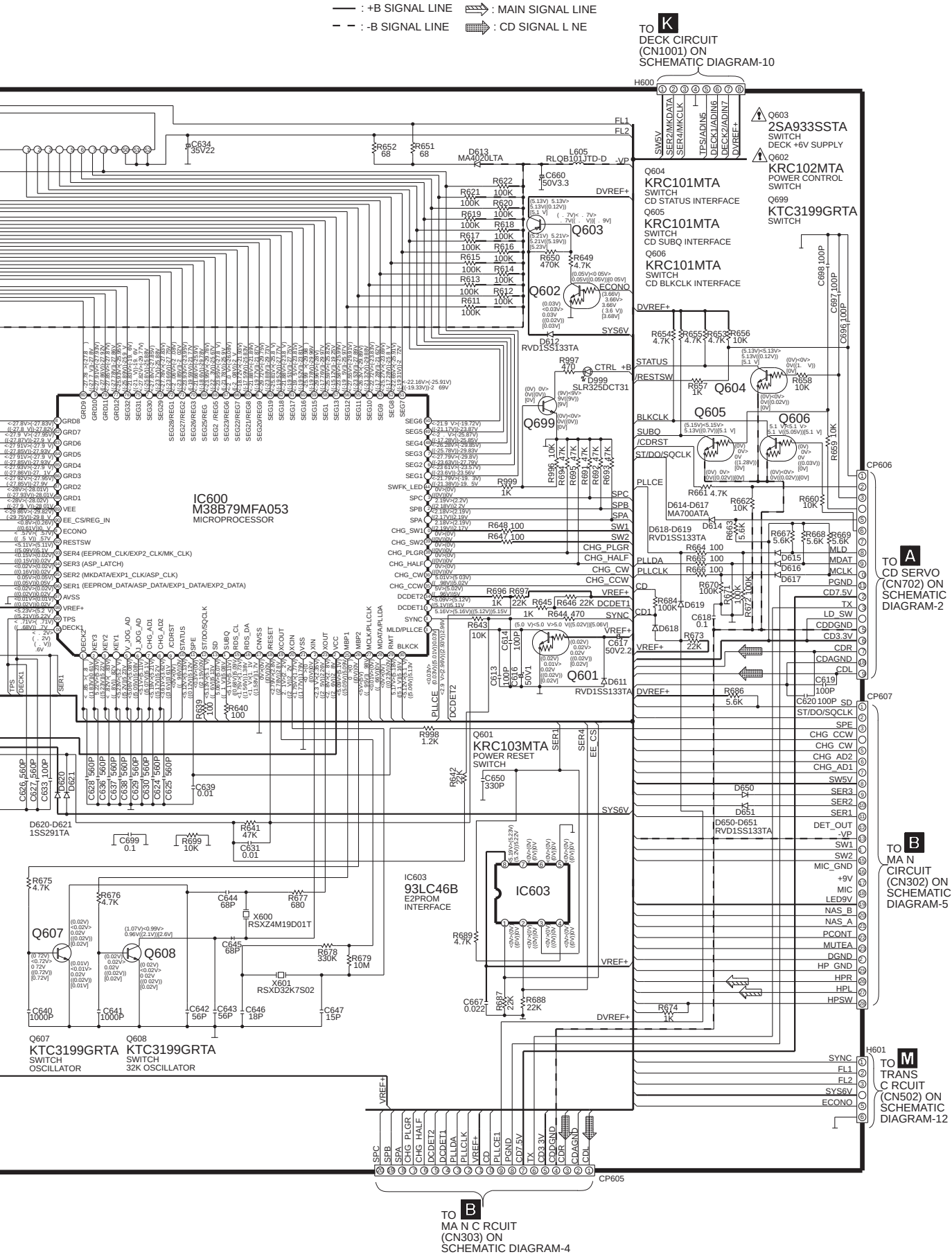

SCHEMATIC DIAGRAM - 11

—— : +B SIGNAL LINE – – : -B SIGNAL LINE ⇒ : MAIN SIGNAL LINE

L POWER CIRCUIT

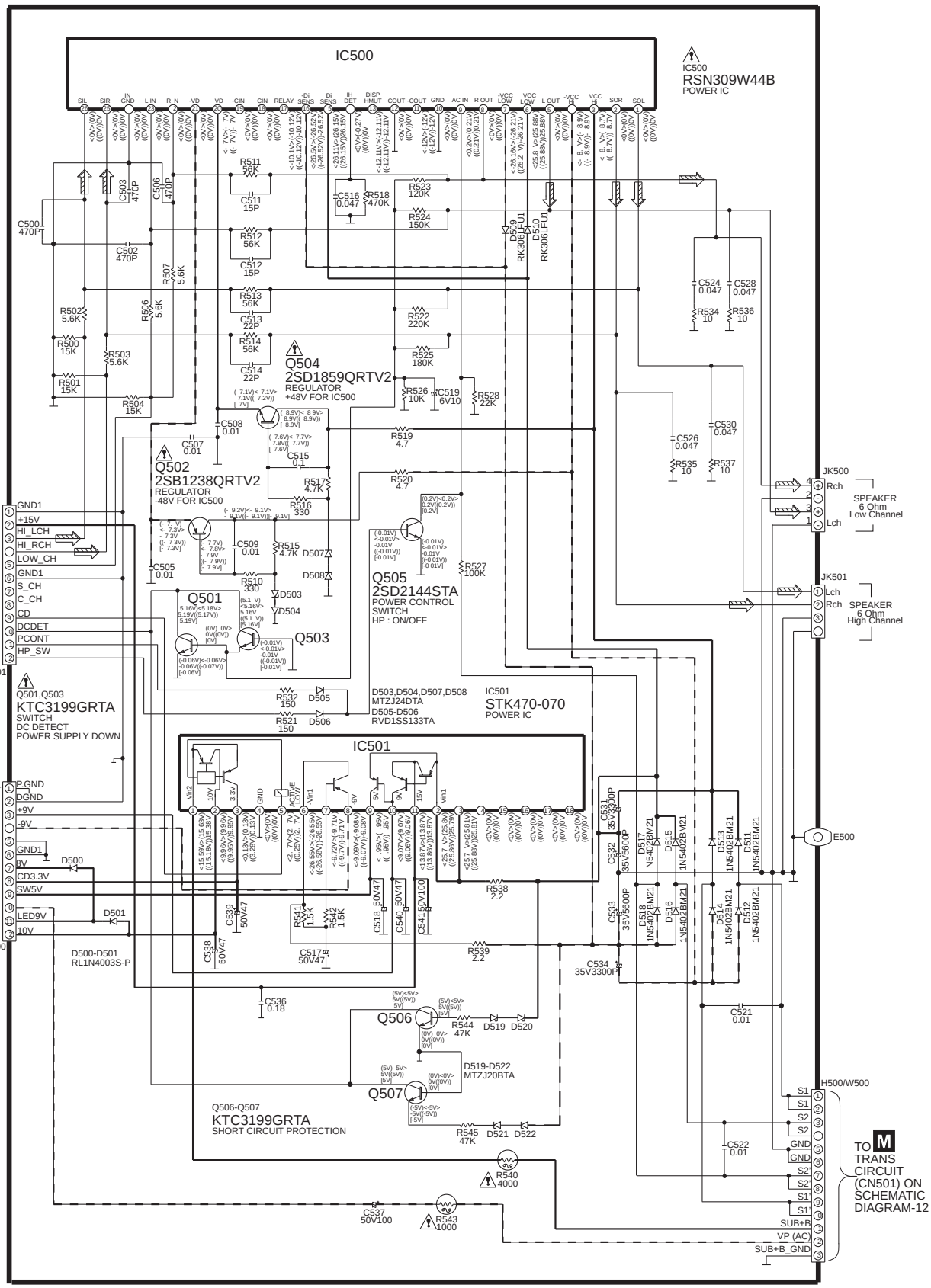

SCHEMATIC DIAGRAM -12

— : +B SIGNAL L NE

M AC TRANSFORMER CIRCUIT

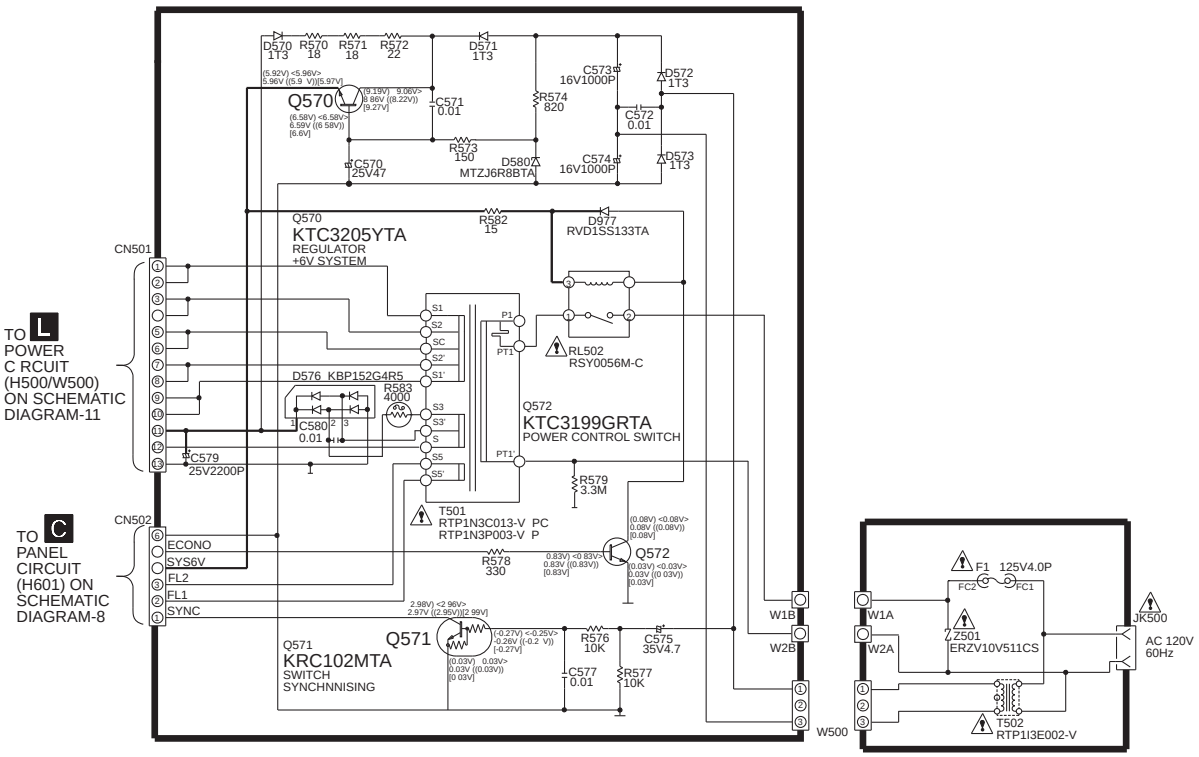

N SUB-TRANSFORMER CIRCUIT

G CD LOADING CIRCUIT

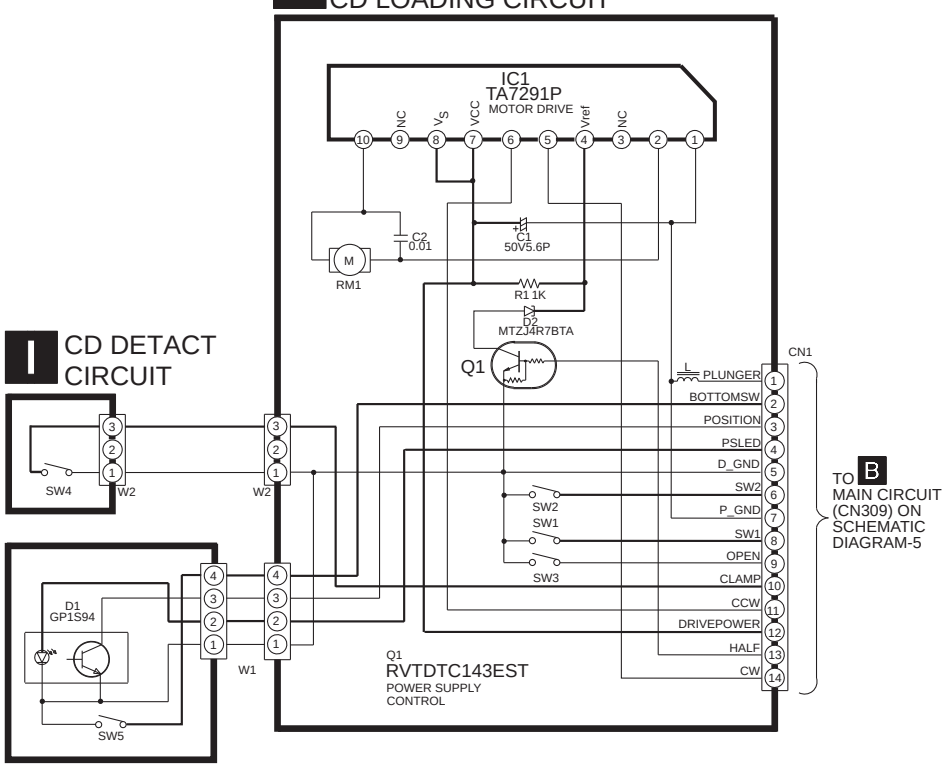

I CD DETACT CIRCUIT

H SPINDLE POSITION CIRCUIT

SCHEMATIC DIAGRAM - 3

: +B SIGNAL L NE
: +B SIGNAL LINE
: FM SIGNAL LINE
: FM OSC SIGNAL L NE
: AM SIGNAL L NE
: AM OSC SIGNAL L NE
: FM/AM SIGNAL LINE

B MAIN/TUNER CIRCUIT

