RF20HFENBSR

33"-Wide, 20 cu. ft. French Door Refrigerator

Features

- Storage Capacity – 20 cu. ft.
- 33"-Wide
- Automatic Filtered Ice Maker in Freezer
- LED Lighting
- Twin Cooling System®
- Surround Air Flow
- Power Freeze and Power Cool Options
- Two Humidity-Controlled Crispers
- Tempered Glass Shelves
- Gallon Door Bins
- EZ-Open Handle™ on Freezer Door

Convenience

- Cool Tight Door
- Door Alarm

Meets DOE standards:
617 kWh/yr





French Door Design



Automatic Filtered Ice Maker in the Freezer

Available Colors

- Stainless Steel (shown)
- White
- Black
- Stainless Platinum



*Ranked **"Highest in Customer Satisfaction with Refrigerators"** by J.D. Power and Associates.*

Signature Features

AUTOMATIC FILTERED ICE MAKER IN FREEZER

- Conveniently located in the freezer, Samsung's ice maker provides filtered ice cubes.

TWIN COOLING SYSTEM®

- Refrigerator air is kept at higher, near-commercial-grade humidity levels to keep perishable fruits and vegetables from spoiling quickly.**
- Drier freezer air means less freezer burn for better-tasting frozen foods.

** Twin Cooling® humidity levels up to 5x higher than single cooling systems.

LED LIGHTING

- Beautifully lights up the interior so you're able to quickly spot what you want.
- Sleek design saves more space than traditional incandescent light bulbs.

SAMSUNG

RF20HFENBSR

33"-Wide, 20 cu. ft. French Door Refrigerator

Installing Your Refrigerator

1. Measure the height, width and depth of the opening, making sure to include baseboards, molding tile, countertop overhang, etc. Check to be sure there is enough room to open the door (consider walls, islands or other obstacles when measuring).
2. Refer to illustration below to determine dimensions.
3. Allow 2" of clearance on hinge side of refrigerator when installing next to a wall where handle may make contact.
4. Allow 1" minimum clearance at rear for proper air circulation and water/electrical connections. Allow a 3/8" minimum clearance at sides and top for ease of installation.
5. Ensure each door and entry way in the home is wide enough for the refrigerator to be moved through easily.

Please note: The following dimension and cutout information is for planning purposes only. For complete installation details consult manual packed with product, or download manual on-line at samsung.com.

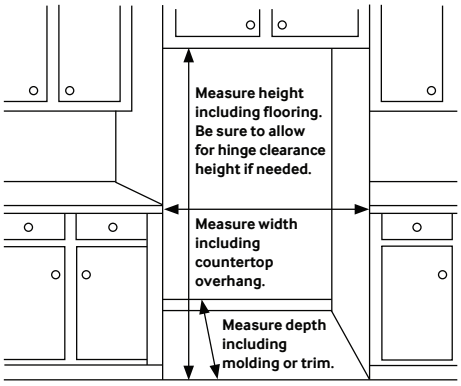

Dimensions

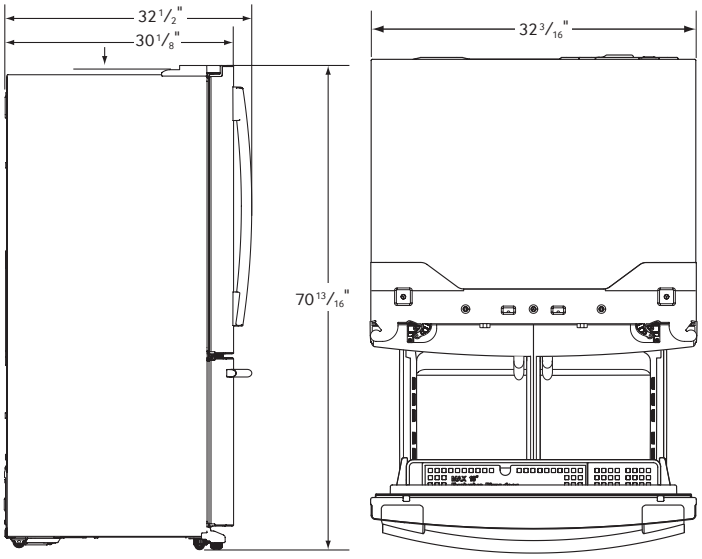

Total Capacity: 19.4 cu. ft.

Refrigerator: 12.8 cu. ft.

- Surround Air Flow
- 2 Humidity-Controlled Crispers
- 3 Tempered Glass Shelves
- 2 Gallon Door Bins
- 1 Dairy Bin
- LED Lighting

Freezer: 6.6 cu. ft.

- EZ-Open Handle™
- 1 Large Opaque Bin with Divider
- Automatic Filtered Ice Maker (Cubed)
- LED Lighting

Accessories

Water Filter: HAF-CIN (Not included.)

Warranty

One (1) Year Parts and Labor on Refrigerator

Five (5) Years Parts and Labor on Sealed Refrigeration System Only*

Ten (10) Years Parts and Five (5) Years Labor on Digital Inverter Compressor

*Compressor, evaporator, condenser, drier, connecting tubing

Product Dimensions & Weight

Dimensions (WxHxD with hinges, handles and doors):
32 3/16" x 70 13/16" x 32 1/2"

Dimensions (WxHxD without hinges and door):
32 3/16" x 69 7/8" x 26 1/4"

Dimensions (WxHxD with hinge and door, no handle):
32 3/16" x 70 13/16" x 30 1/8"

Weight: 242.5 lbs.

Shipping Dimensions & Weight (WxHxD)

Dimensions: 34 11/16" x 75" x 33 1/8"

Weight: 266.7 lbs.

Color	Model #	UPC Code
Stainless Steel	RF20HFENBSR	887276038452
White	RF20HFENBWW	887276038469
Black	RF20HFENBBC	887276038438
Stainless Platinum	RF20HFENBSP	887276038445

SAMSUNG

Samsung received the highest numerical score for refrigerators in the proprietary J.D. Power and Associates 2012 Kitchen Appliance Study.℠ Study based on 12,615 total responses measuring 17 brands and measures opinions of consumers about their refrigerator obtained new in the past 24 months. Proprietary study results are based on experiences and perceptions of consumers surveyed in January-February 2012. Your experiences may vary. Visit jdpower.com.

Actual color may vary. Design, specifications, and color availability are subject to change without notice.
Non-metric weights and measurements are approximate.

©2014 Samsung Electronics America, Inc. 85 Challenger Road, Ridgefield Park, NJ 07660. Tel: 800-SAMSUNG. samsung.com.
Samsung is a registered trademark of Samsung Electronics Co. Ltd.