DALI-P02

DALI Touch Panel Controller





Summary

DALI-P02 is one of our high-end, DALI walldim touch panel controller series, with characteristic of fashionable and beautiful appearance, complete functions, easy operations, sensitive key touch. The user can control DALI controller and driver to achieve group and scene control via this panel. It can be widely used in hotels, restaurants, villas, hospitals and offices and other regions.

Product Features

- Meet DALI Standard protocol IEC60929/IEC62386
- Supplied via DALI bus
- Support broadcast control.
- Support up to 3 groups control individually.
- Support up to 4 scenes control individually.
- Use blue led button indicator, easy to use.
- Can support many standard electrical wall box
- Glass panel, fashion style.
- Start Group and start Scene can be set by dip-switch in back side.
- Can choose white or black according to personal preference.

Technical Parameters

Model		DALI-P02
Output	Signal	DALI signal（Group/Scene/ broadcast）
	Indicator lights	9
	Groups	3
	Scenes	4
Input	Voltage	16VDC±5%
	Current	8mA
Others	Dimension	86*86*10mm（L*W*H）
	Packing size	145*135*48mm（L*W*H）
	N.W.	110g
	G.W	145g
	Working temp.	-10℃ ~ 60℃
	Relative humidity	20~90% RH

Dimension（mm）

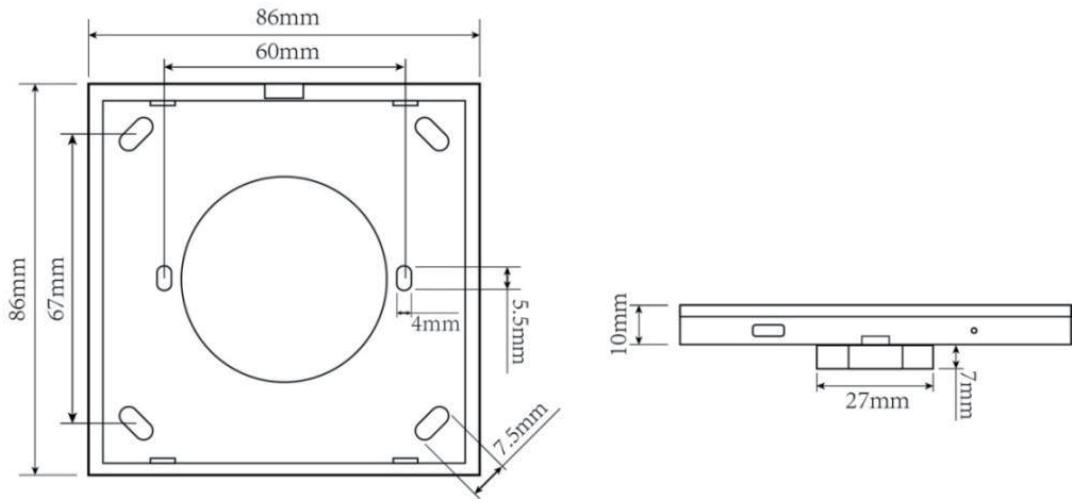

Function Description

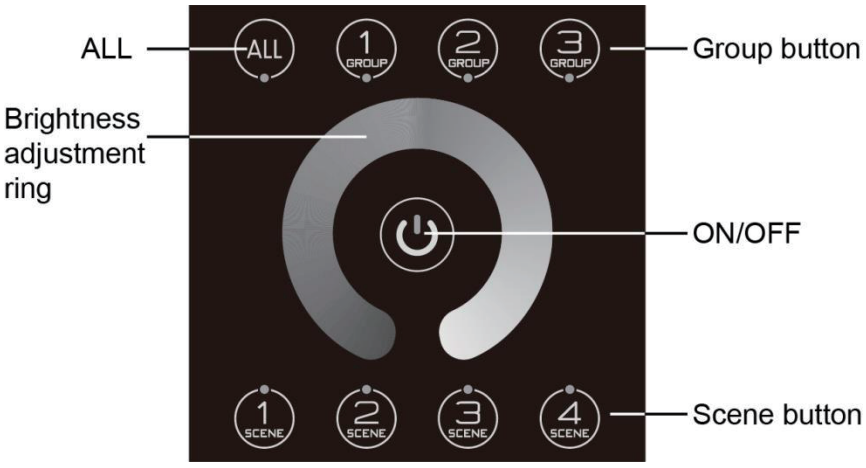

1. ON/OFF

- In OFF status, long press the ON/OFF button to enable the panel, all the lamps will light up with the scene 1.

- In ON status, long press the ON/OFF button to close the panel, and all the lamps will turn off. ON/OFF button led indicator will light weakly, indicate the ON/OFF switch position in darkness.

2. GROUP Dimming

- **ALL:** broadcast，select all the lights connected in this DALI loop，up to 64.

  When you want to select the broadcast command, press ALL and the corresponding indicator lights, you can choose the scene, or adjust the brightness by touch the ring with finger directly.

  If ALL is selected, the indicator lights, long press ALL, all the lamps will turn off.

- **GROUP 1:** Select the start group, the "start group ID"can be set by dip-switch in backside.
- **GROUP 2:** Select the group which group ID is "start group ID +1"
- **GROUP 3:** Select the group which group ID is "start group ID +2"

3. SCENE

Touch the Scene 1/2/3/4 button, you can recall 4 kinds of scene configured by user.

- SCENE1：Recall the start scene, the "start scene ID"can be set by dip-switch in backside.
- SCENE2：Recall the scene which scene ID is "start scene ID +1"
- SCENE3：Recall the scene which scene ID is "start scene ID +2"
- SCENE4：Recall the scene which scene ID is "start scene ID +3"

4. Brightness adjust ring

You can touch the ring to adjust brightness with finger. Clockwise turn will increase the brightness; Anti-clockwise turn will reduce the brightness. The lowest brightness is 5%, the maximum brightness is 100%.

Interface Introduction

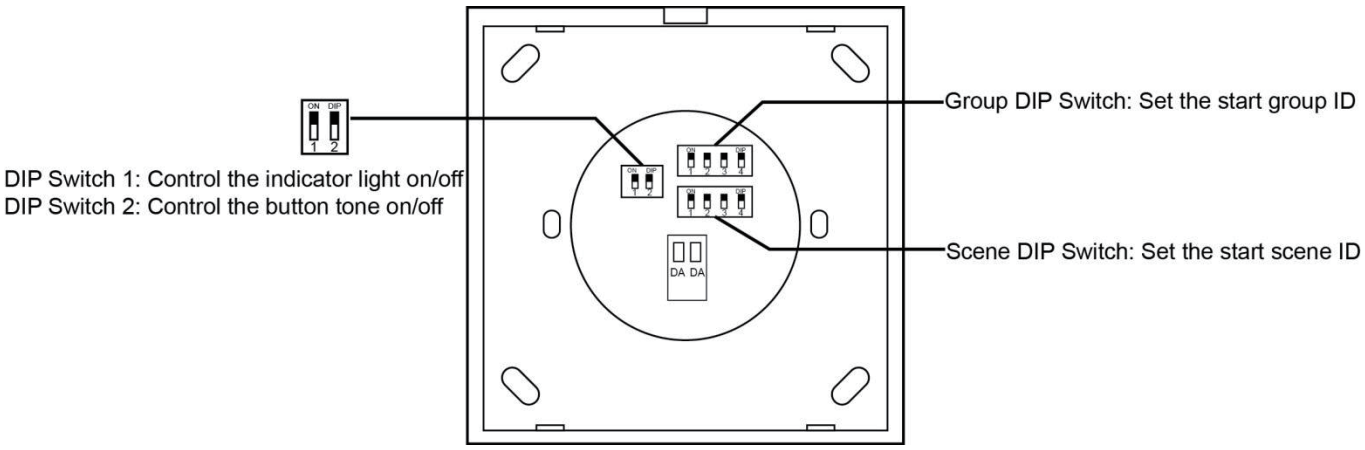

- **Start Group ID Settings**

Group DIP Switch: the start group ID setting, the ID is 0, 3, 6, 9, 12…..15.

- **Start Scene ID Settings**

Scene DIP Switch: the start scene ID setting, the range is 0-15.

Binary dial table as following (0 means OFF, 1 means ON)

DIP switch state	ID	DIP switch state	ID
0-0-0-0	0	0-0-0-1	8
1-0-0-0	1	1-0-0-1	9
0-1-0-0	2	0-1-0-1	10
1-1-0-0	3	1-1-0-1	11
0-0-1-0	4	0-0-1-1	12
1-0-1-0	5	1-0-1-1	13
0-1-1-0	6	0-1-1-1	14
1-1-1-0	7	1-1-1-1	15

- **Button Indicator Settings**

Use the DIP switch 1 to set button indicator light. When set the DIP switch 1 to "ON", the button indicator will light up when touch the button; otherwise, the button lights are dark.

- **Button Tone Settings**

Use the DIP switch 2 to set button tone. When set the DIP switch 1 to "ON", the button tone is enable; otherwise, the button tone is disable.

DALI Diagram

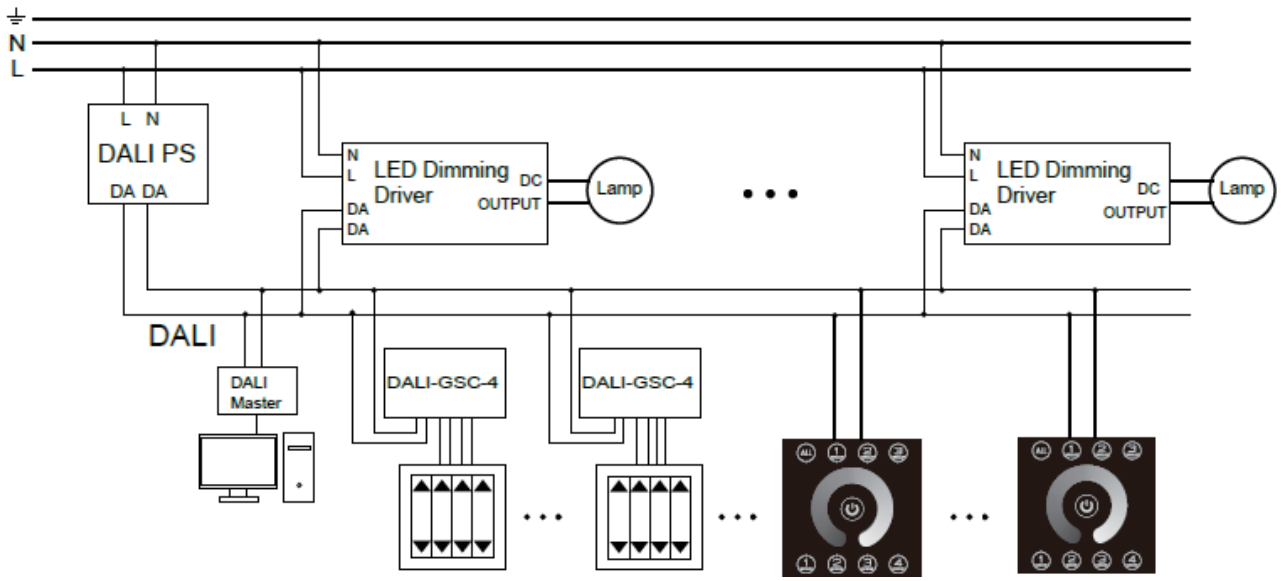

Installation guide

1. Mount an electrical box inside the wall

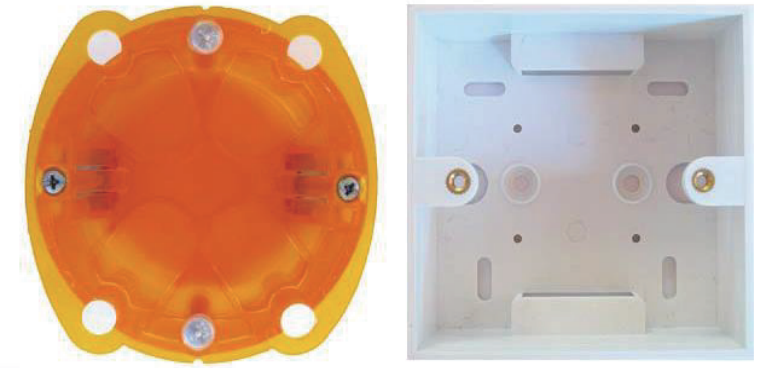

2. To separate the glass panel and the back cover of the controller with a screwdriver along the gap of the back cover.

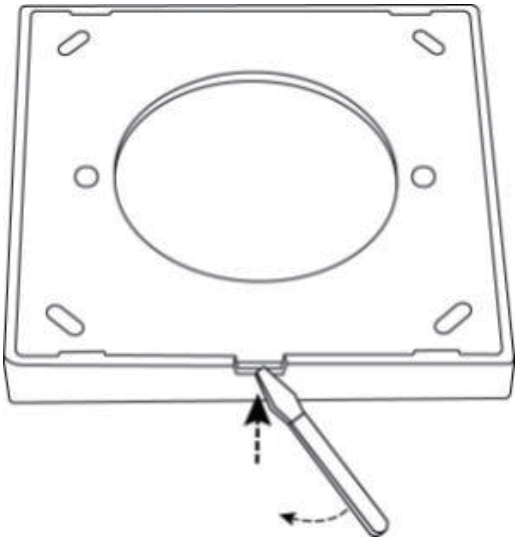

3. Connect the wires
4. To put the back cover on the electrical box and fix it with the screw.

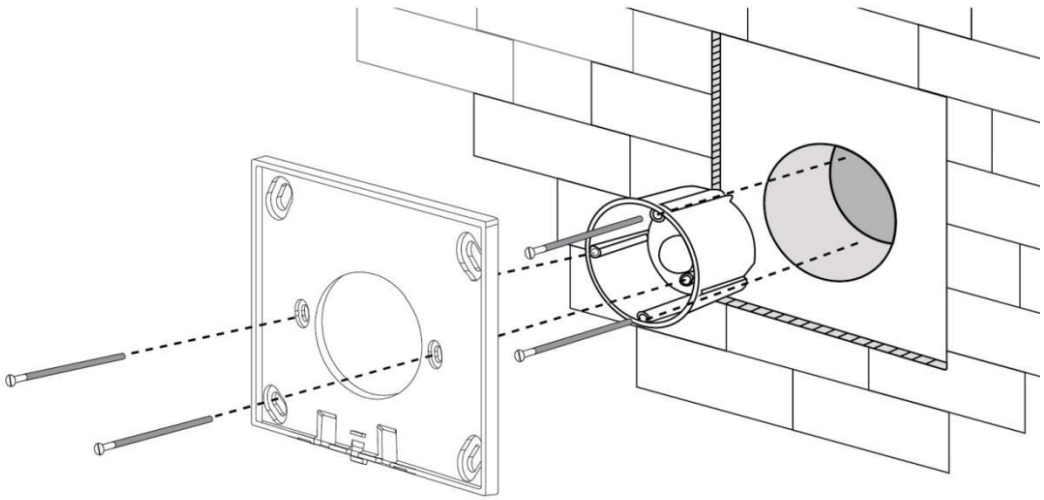

5. To buckle the glass panel to the bottom box.

