ABB industrial drives

Hardware manual
ACS800-37LC Drives (55 to 5200 kW)



Power and productivity
for a better world™

List of related manuals

Drive hardware manuals	Code (English)
ACS800-37LC Drives (55 to 5200 kW) Hardware Manual	*3AUA0000065342*
ACS800 IGBT Supply Control Program Firmware Manual	*3AFE68315735*
ACS800 Standard Control Program Firmware Manual	*3AFE64527592*

Option manuals and guides	
ACS800-1007LC Liquid Cooling Unit User's Manual	*3AFE68621101*
ACS800-607LC 3-phase Brake Units Hardware Manual	*3AFE68835861*
ACS800 Brake Control Program Firmware Manual	*3AFE68835631*
ACW 621 Braking Chopper Sections User's Manual	*3BFE64314874*
ACS800 Sine Filters User's Manual	*3AFE68389178*
Fieldbus Adapters, I/O Extension Modules etc.	

You can find manuals and other product documents in PDF format on the Internet. See section *Document library on the Internet* on the inside of the back cover. For manuals not available in the Document library, contact your local ABB representative.

ACS800-37LC Drives
55 to 5200 kW

Hardware Manual

3AUA0000065342 REV B EN
EFFECTIVE: 2016-06-07

© 2016 ABB Oy. All Rights Reserved.

Table of contents

Table of contents

Safety instructions

What this chapter contains . . . 13
Use of warnings . . . 13
Safety in installation and maintenance . . . 14
    Electrical safety . . . 14
        Grounding . . . 15
        Permanent magnet motor drives . . . 16
    General safety . . . 17
        Printed circuit boards . . . 17
        Fiber optic cables . . . 17
        Use of the hand-operated winch . . . 18
        Work on the liquid cooling system . . . 18
Safe start-up and operation . . . 19
    General safety . . . 19
        Permanent magnet motor drives . . . 19

Introduction to the manual

What this chapter contains . . . 21
Applicability . . . 21
Target audience . . . 21
Contents . . . 21
Related documents . . . 22
Categorization by frame size and option code . . . 22
Quick installation and start-up flowchart . . . 23
Terms and abbreviations . . . 24

Operation principle and hardware description

What this chapter contains . . . 27
Product overview . . . 27
Operation principle . . . 27
    AC voltage and current waveforms . . . 27
Single-line circuit diagram of the drive . . . 29
    Example circuit diagram (frames R7i+R7i and R8i+R8i) . . . 29
    Example circuit diagram (frame 2×R8i+2×R8i) . . . 30
Block diagram of the main circuit with options . . . 31
General information on drive cabinet layout . . . 32
Cabinet layout (frames R7i+R7i and R8i+R8i) . . . 33
    Swing-out frame layout . . . 34
Auxiliary control cubicle layout . . . 35
Main switch disconnecter cubicle layout (frames 2×R8i+2×R8i and up) . . . 36

600 mm wide cubicle 36
1000 mm wide cubicle 36
Layout of LCL filter and supply module cubicles (frame 2×R8i and up) 37
Swing-out frame layout 38
Layout of inverter module cubicle (frame 2×R8i) 39
Layout of inverter module cubicle (frame 3×R8i) 40
Layout of inverter module cubicles (frames 4×R8i to 9×R8i) 41
Swing-out frame layout of the inverter module cubicles 41
Overview of supply and inverter modules (R7i and R8i) 42
Overview of power and control connections 43
Control of the supply unit 44
Main switch-disconnector Q1 (frames R7i+R7i and R8i+R8i) 44
Supply transformer disconnecting push button (+Q959) 44
Operating switch 44
Auxiliary power switch Q100 (frame sizes 2×R8i and up) 44
Grounding switch Q9 (option +F259) 44
Emergency stop push button 45
Reset button 45
Connections and use of the I/O in the supply unit 46
Connections to standard I/O terminals 47
Control of the inverter unit and motor 48
Control panel 48
Connections and use of the I/O in the inverter unit 48
Circuit boards 48
Type designation labels 49
Drive label 49
Supply, inverter and brake module label 49
Type designation key 51
Type code of the basic configuration 51
Option codes 51

Mechanical installation

What this chapter contains 55
Checking the installation site 55
Required tools 55
Checking the delivery 56
Moving the unit 56
Moving the unit by crane 56
Moving the unit by fork-lift or pallet truck 57
Moving the unit on rollers (not allowed with marine cabinets) 57
Laying the unit on its back 57
Placing the unit 58
Overview of the installation procedure 59
Fastening the cabinet to the floor and wall (non-marine units) 60
Alternative 1 – Clamping 60
Alternative 2 – Using the holes inside the cabinet 61
Fastening the unit to the floor and wall (marine units, option +C121) 62
Joining the shipping splits 63
Preparing the liquid pipe connections 63

Fastening the cabinets together . . . 63
Connecting the liquid pipes . . . 64
Connecting the PE busbars . . . 64
Connecting the DC busbars . . . 65
Miscellaneous . . . 66
Cable duct in the floor below the cabinet . . . 66
Electric welding . . . 67

Planning the electrical installation

What this chapter contains . . . 69
Selecting the supply disconnecting device (disconnecting means) . . . 69
Checking the compatibility of the motor and drive . . . 69
Protecting the motor insulation and bearings . . . 70
Requirements for motor insulation and bearings and drive filters . . . 71
Explosion-safe (EX) motors . . . 72
High-output motors and IP 23 motors . . . 73
HXR and AMA motors . . . 73
ABB motors of types other than M2_, M3_, HX_ and AM_ . . . 73
Resistor braking of the drive . . . 73
When DC link voltage is increased with parameter settings . . . 73
Calculating the rise time and the peak line-to-line voltage . . . 73
Sine filters . . . 74
Selecting the power cables . . . 74
General rules . . . 74
Typical power cable sizes . . . 76
Alternative power cable types . . . 78
Motor cable shield . . . 78
Additional US requirements . . . 79
Conduit . . . 79
Armored cable / shielded power cable . . . 79
Selecting the control cables . . . 80
General rules . . . 80
Relay cable . . . 80
Control panel cable . . . 80
Coaxial cable (for use with Advant Controllers AC 80/AC 800) . . . 80
Routing the cables . . . 81
Separate control cable ducts . . . 82
Protecting the drive, input power cable, motor and motor cable in short circuit situation and against thermal overload . . . 82
Protecting the drive and input power cable in short-circuit situations . . . 82
Protecting the motor and motor cable in short-circuit situations . . . 82
Protecting the drive, motor cable and input power cable against thermal overload . . . 83
Protecting the motor against thermal overload . . . 83
Insulation requirements for the motor temperature sensor circuit . . . 83
Protecting the drive against ground faults in the drive, motor or motor cable . . . 84
Implementing the emergency stop function . . . 84
Implementing the Prevention of unexpected start function . . . 84
Implementing the Safe torque off function . . . 85
Implementing the power-loss ride-through function . . . 86

Supplying power for the auxiliary circuits 86
Terminals for connecting external control voltage (option +G307) 86
Units without optional auxiliary control transformer and without terminals for connecting external control voltage (option +G307) 86
Using power factor compensation capacitors with the drive 87
Implementing a safety switch between the drive and motor 87
Using a contactor between the drive and motor 88
Implementing a bypass connection 89
Example bypass connection 89
Switching the motor power supply from drive to direct-on-line 89
Switching the motor power supply from direct-on-line to drive 90
Protecting the contacts of relay outputs 90
Considering the PELV on installation sites above 2000 metres (6562 feet) 91

Electrical installation

What this chapter contains 93
Checking the insulation of the assembly 93
Drive 93
Supply cable 93
Motor and motor cable 93
Braking resistor assembly 94
Checking the compatibility with IT (ungrounded) and corner grounded TN systems 94
Connecting the input power cable 95
Connection diagram 95
Connection procedure 95
Connecting the motor cable – units with no common motor terminals cubicle option +H359 96
Connection diagram – single inverter module feeds one motor 96
Connection diagram – parallel inverter modules feed one motor 97
Connection procedure 98
Connecting the motor cable (units with the common motor cable connection terminals cubicle option +H359) 100
Connection diagram 100
Connection procedure 100
Connecting external power supply for the auxiliary circuits 102
Frames R7i×R7i and R8i×R8i 102
Frames 2×R8i and up 103
Standard unit without optional auxiliary control voltage transformer or terminals for connecting external control voltage 103
Units with optional auxiliary control voltage transformer and without terminals for connecting external control voltage (+G307) 103
Units with terminals for connecting external control voltage (option +G307) and without optional auxiliary control voltage transformer 104
Connecting the control cables for the supply unit 104
Connecting the control cables for the inverter unit 105
Default I/O connection diagram 105
Connection procedure 107
Connecting a PC 108
Installing optional modules 108
Cabling of I/O and fieldbus modules 109

Cabling of pulse encoder interface module . . . 109
Fiber optic links . . . 109

Installation checklist

What this chapter contains . . . 111
Installation checklist . . . 111

Start-up

What this chapter contains . . . 113
Start-up procedure . . . 113
Safety . . . 113
Checks with no voltage connected . . . 113
Connecting voltage to the input terminals and auxiliary circuit . . . 114
Closing the main contactor/breaker . . . 114
Checking the setting of the ground fault monitoring device . . . 114
Supply unit control program set-up . . . 114
Inverter unit control program set-up . . . 114
Liquid cooling unit control program set-up . . . 114
Starting the inverter unit . . . 115
On-load checks . . . 115
Switching the control panel between the supply and inverter units . . . 116
ACS800-37LC-specific parameters in the IGBT Supply Control Program . . . 117
Terms and abbreviations . . . 117
Parameters . . . 117
Default values of parameters with the ACS800-37LC . . . 119
ACS800-37LC-specific parameters in the application program . . . 119
Terms and abbreviations . . . 119
Actual signals and parameters of supply unit in inverter unit program . . . 119

Fault tracing

LEDs . . . 123
Warning and fault messages . . . 123
Warning/Fault message from the unit not being monitored by the control panel . . . 123
Conflicting ID numbers . . . 123

Maintenance

What this chapter contains . . . 125
Maintenance intervals . . . 125
Fans . . . 125
Replacing the converter module cooling fan (frames R7i and R8i) . . . 125
Replacing the additional fan in the incoming cubicle (frames R7i+R7i and R8i+R8i) . . . 126
Replacing the auxiliary control cubicle fan (frames 2×R8i+2×R8i and up) . . . 127
Replacing the fan in the incoming cubicle (frames 2×R8i+2×R8i and up) . . . 128
Replacing the cooling fans in supply module cubicle . . . 129
Replacing the inverter module fans (2×R8i and up) . . . 130
Replacing the additional fan in the common motor terminals cubicle . . . 130

Reduced run capability 131
Replacing supply and inverter modules 132
Installing the winch 136
Installing the installation stand 137
Capacitors 138
Reforming the capacitors 138
Replacing the capacitors 138
Control panel 138
Cleaning the control panel 138
Replacing the PPCS branching unit (APBU-xx) memory backup battery 139

Internal cooling circuit

General 141
Internal cooling system diagram 141
Connection to a cooling unit 142
Connection to an ACS800-1007LC cooling unit 142
Connection to a custom cooling unit 142
General requirements 142
Coolant temperature control 142
Installation 142
Filling up and bleeding the internal cooling circuit 143
Drive line-ups with an ACS800-1007LC cooling unit 143
Drive line-ups with a custom cooling unit 143
Draining the internal cooling circuit 144
Adding inhibitor 144
Specifications 145
Temperature limits 145
Pressure limits 145
Water quality 146
Freeze protection and corrosion inhibition 146
Glycol concentration 146
Materials 147

Technical data

What this chapter contains 149
Ratings 149
Definitions 150
Derating 150
Temperature derating 150
Altitude derating 151
Type equivalence table 151
1-phase brake choppers (option +D150) and resistors (option +D151) 152
3-phase brake units (option +D152) 153
Fuses 155
Main circuit AC fuses 155
Main circuit DC fuses 157
Dimensions, weights and free space requirements 158
Losses, cooling data and noise 160

Internal cooling circuit data . . . 161
Terminal and lead-through data for the input power cable . . . 162
Terminal and lead-through data for the motor cable . . . 163
Units without common motor terminal cubicle (no option +H359) . . . 163
Units with the Common Motor Terminal (CMT) cubicle (option +H359) . . . 164
Terminal and lead-through data for the resistor cable . . . 164
Terminal and lead-through data for the control cables . . . 164
Electrical power network specification . . . 165
Motor connection data . . . 165
Brake resistor connection data . . . 165
Control unit (RDCU/RMIO) connection data . . . 166
Analog inputs . . . 166
Constant voltage output . . . 166
Auxiliary power output . . . 166
Analog outputs . . . 166
Digital inputs . . . 166
Relay outputs . . . 167
DDCS fibre optic link . . . 167
24 V DC power input . . . 167
Isolation and grounding diagram . . . 168
Ambient conditions . . . 169
Efficiency . . . 169
Degree of protection . . . 169
Materials . . . 170
Auxiliary circuit current consumption . . . 171
Applicable standards . . . 172
CE marking . . . 173
Compliance with the European Low Voltage Directive . . . 173
Compliance with the European EMC Directive . . . 173
Compliance with the European Machinery Directive . . . 173
Compliance with EN 61800-3:2004 . . . 173
Definitions . . . 173
Category C2 . . . 174
Category C3 . . . 174
Category C4 . . . 175
UL marking . . . 176
UL checklist . . . 176
CSA marking . . . 176
Approvals . . . 176
Cyber security disclaimer . . . 177
Disclaimer . . . 177

Dimensions

What this chapter contains . . . 179
Table of dimensions . . . 179
Frame sizes R7i+R7i and R8i+R8i (bottom entry/exit) . . . 181
Frame sizes R7i+R7i and R8i+R8i (marine units, +C121) . . . 182
Product and service inquiries . . . 183
Product training . . . 183

Providing feedback on ABB manuals 183
Document library on the Internet 183

Safety instructions

What this chapter contains

This chapter contains safety instructions you must follow when installing, operating and servicing the drive. If ignored, physical injury or death may follow, or damage may occur to the drive, motor or driven equipment. Read the safety instructions before you work on the unit.

Use of warnings

Warnings caution you about conditions which can result in serious injury or death and/or damage to the equipment, and advise on how to avoid the danger. The following warning symbols are used in this manual:



Electricity warning warns of hazards from electricity which can cause physical injury and/or damage to the equipment.



General warning warns about conditions, other than those caused by electricity which can result in physical injury and/or damage to the equipment.



Electrostatic sensitive devices warning warns of electrostatic discharge which can damage the equipment.

Safety in installation and maintenance

Electrical safety

These warnings are intended for all who work on the drive, motor cable or motor.



WARNING! Ignoring the following instructions can cause physical injury or death, or damage to the equipment:

- **Only qualified electricians are allowed to install and maintain the drive.**
- Before working on the drive, isolate the whole drive from the supply. The main switch on the cabinet door does not remove the voltage from the input busbars of the drive.
- Never work on the drive, motor cable or motor when main power is applied. After switching off the input power, always wait for 5 min to let the intermediate circuit capacitors discharge before you start working on the drive, motor or motor cable. Measure the voltage between + and - DC busbars with a multimeter (impedance at least 1 Mohm) to ensure that the drive is discharged before beginning work.
- Apply temporary grounding before working on the unit.
- Do not work on the control cables when power is applied to the drive or to the external control circuits. Externally supplied control circuits may cause dangerous voltages inside the drive even when the main power on the drive is switched off.
- Do not make any insulation or voltage withstand tests on the drive or drive modules.
- When reconnecting the motor cable, always check that the phase order is correct.
- When joining shipping splits (if any), check the cable connections at the joints before switching on the supply voltage.
- Live parts on the inside of the doors are protected against direct contact. Pay special attention when handling metallic shrouds.

Note:

- The motor cable terminals on the drive are at a dangerously high voltage when the input power is on, regardless of whether the motor is running or not.
- The drive DC bus and brake resistor terminals (R+, R-, R1.1, R1.2, R1.3, R2.1, R2.2. and R2.3) carry dangerous voltage (over 500 V).
- Depending on the external wiring, dangerous voltages (115 V, 220 V or 230 V) may be present on the relay outputs of the drive system.
- The Prevention of unexpected start function (option +Q950) and the Safe torque off function (option +Q968) do not remove the voltage from the main and auxiliary circuits.
- At installation sites above 2000 m (6562 ft), the terminals of the RMIO board and optional modules attached to the board do not fulfil the Protective Extra Low Voltage (PELV) requirements stated in EN 61800-5-1.

Grounding

These instructions are intended for all who are responsible for the grounding of the drive.



WARNING! Ignoring the following instructions can cause physical injury, death, increased electromagnetic interference and equipment malfunction:

- Ground the drive, motor and adjoining equipment to ensure personnel safety in all circumstances, and to reduce electromagnetic emission and interference.
- Make sure that grounding conductors are adequately sized as required by safety regulations.
- In a multiple-drive installation, connect each drive separately to protective earth (PE).
- Do not install a drive equipped with optional EMC filter +E202 to an ungrounded power system or a high resistance-grounded (over 30 ohms) power system.

Note:

- Power cable shields are suitable for equipment grounding conductors only when adequately sized to meet safety regulations.
- As the normal leakage current of the drive is higher than 3.5 mA AC or 10 mA DC, a fixed protective earth connection is required by EN 61800-5-1, 4.3.5.5.2. See also *Selecting the power cables*, page *74*.

Permanent magnet motor drives

These are additional warnings concerning permanent magnet motor drives.



WARNING! Ignoring the following instructions can cause physical injury, death, increased electromagnetic interference and equipment malfunction:

- Do not work on the drive when the permanent magnet motor is rotating. Also, when the supply power is switched off and the inverter is stopped, a rotating permanent magnet motor feeds power to the intermediate circuit of the drive and the supply connections become live.

Before installation and maintenance work on the drive:

- Stop the motor.
- Ensure that there is no voltage on the drive power terminals according to step 1 or 2, or if possible, according to the both steps.

1. Disconnect the motor from the drive with a safety switch or by other means. Measure that there is no voltage present on the drive input or output terminals (L1, L2, L3, U1, V1, W1, U2, V2, W2, R+, R-).
2. Ensure that the motor cannot rotate during work. Make sure that no other system, like hydraulic crawling drives, is able to rotate the motor directly or through any mechanical connection like felt, nip, rope, etc. Measure that there is no voltage present on the drive input or output terminals (L1, L2, L3, U1, V1, W1, U2, V2, W2, R+, R-, R1.1, R1.2, R1.3, R2.1, R2.2. and R2.3). Ground the drive output terminals temporarily by connecting them together as well as to the PE.

General safety

These instructions are intended for all who install and service the drive.



WARNING! Ignoring the following instructions can cause physical injury or death, or damage to the equipment:

- Cover the drive when installing to ensure that dust from borings and grindings or foreign objects do not enter the drive. Electrically conductive dust inside the unit may cause damage or lead to malfunction.
- Ensure sufficient cooling of the unit.
- Use extreme caution when manoeuvring heavy inverter, supply and filter modules.
- Beware of hot surfaces. Some parts inside the drive cabinet, such as heatsinks of power semiconductors, remain hot for a while after the disconnection of the electrical supply.
- Pay attention to rotating cooling fans. The cooling fans may continue to rotate for a while after the disconnection of the electrical supply.
- *Recommendation:* Do not fasten the cabinet by riveting or welding. However, if electric welding is the only way to mount the cabinet, follow the instructions given in chapter *Mechanical installation*. Ensure that welding fumes are not inhaled. If the welding return wire is connected improperly, the welding circuit may damage electronic circuits in the cabinet.

Printed circuit boards



WARNING! Ignoring the following instructions can cause damage to the printed circuit boards:

- The printed circuit boards contain components sensitive to electrostatic discharge. Wear a grounding wrist band when handling the boards. Do not touch the boards unnecessarily.

Fiber optic cables



WARNING! Ignoring the following instructions can cause equipment malfunction and damage to the fiber optic cables:

- Handle the fiber optic cables with care. When unplugging optic cables, always grab the connector, not the cable itself. Do not touch the ends of the fibers with bare hands as the fiber is extremely sensitive to dirt. The minimum allowed bend radius is 35 mm (1.4 in.).

Use of the hand-operated winch

These instructions are intended for all who use the hand-operated winch delivered with the drive when replacing the supply or inverter modules.

WARNING! Ignoring these instructions can cause physical injury or death, or damage the to equipment.

- Before using the winch for the first time, spool out 2 meters (6 feet) of cable, then rewind the cable onto the drum keeping enough tension on the cable to make sure no slack is left on the drum.
- When lowering the module, keep in mind that any slack on the winch may cause the module to suddenly drop for several centimetres.
- After using the winch, rewind the cable onto the drum keeping enough tension on the cable to make sure no slack is left on the drum.

Work on the liquid cooling system

These instructions are intended for all who are responsible for installation and maintenance work of the liquid cooling system of the drive.

WARNING! Ignoring the following instructions can cause physical injury or damage to the equipment:

- Beware of hot liquid. Do not work on the liquid cooling system until the pressure is lowered down by stopping the pumps. High-pressure warm coolant (6 bar, max. 50°C) is present in the internal cooling circuit when it is in operation.
- Before power switch-on, make sure that the internal cooling circuit is filled up with coolant. Running the pump dry will damage it. Also the drive will not cool down.
- **Units with a liquid cooling unit option (+C199, +C140, +C141):** Do not open the pump inlet or outlet valves before filling up the internal cooling circuit. The pumps are prefilled with a water-glycol-inhibitor mixture to prevent corrosion and the valves are closed at the factory.
- Avoid skin contact with coolant, especially antifreeze. Do not syphon them by mouth. If such substance is swallowed or gets into the eyes, seek medical advice.
- Do not overtighten the outer union of the nuts of the liquid hoses - leave 2 to 3 mm of thread visible. Overtightening will break the hose.

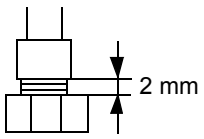

- Drain the unit before storing in temperatures below 0°C. Freezing of the liquid cooling system is not allowed. If the ambient temperature is below +5°C, add antifreeze and corrosion inhibitors to the cooling liquid. Operation at temperatures below zero is not permitted, not even with antifreeze.

Safe start-up and operation

General safety

These warnings are intended for all who plan the operation of the drive or operate the drive.

WARNING! Ignoring the following instructions can cause physical injury or death or damage the equipment:



- Before adjusting the drive and putting it into service, make sure that the motor and all driven equipment are suitable for operation throughout the speed range provided by the drive. The drive can be adjusted to operate the motor at speeds above and below the speed provided by connecting the motor directly to the power line.
- Do not activate automatic fault reset functions of the drive control program if dangerous situations can occur. When activated, these functions will reset the drive and resume operation after a fault.
- Do not control the motor with the disconnecting device (means); instead, use the control panel keys and , or commands via the I/O board of the drive. The maximum allowed number of charging cycles of the DC capacitors ie, power-ups by applying power, is five in ten minutes.
- Do not use the Prevention of unexpected start function or Safe torque off function for stopping the drive when the inverter unit(s) is running. Give a Stop command instead.

Note:

- If an external source for start command is selected and it is ON, the drive (with Standard Control Program) will start immediately after fault reset unless the drive is configured for 3-wire (a pulse) start/stop.
- When the control location is not set to Local (L not shown in the status row of the display), the stop key on the control panel will not stop the drive. To stop the drive using the control panel, press the LOC/REM key and then the stop key .

Permanent magnet motor drives

These are additional warnings concerning permanent magnet motor drives.



WARNING! Do not run the motor above the rated speed. Motor overspeed leads to overvoltage which may result in explosion of the capacitors in the intermediate circuit of the drive.

Introduction to the manual

What this chapter contains

This chapter describes the intended audience and contents of the manual. It contains a flowchart of steps in checking the delivery, installing and commissioning the drive. The flowchart refers to chapters/sections in this manual and other manuals.

Applicability

This manual applies to the hardware of the ACS800-37LC drives. For the firmwares and optional devices, see the appropriate manuals.

Target audience

This manual is intended for people who plan the installation, install, commission, use and service the drive. Read the manual before working on the drive. You are expected to know the fundamentals of electricity, wiring, electrical components and electrical schematic symbols.

The manual is written for readers worldwide. Both SI and imperial units are shown.

Contents

The chapters of this manual are briefly described below.

Safety instructions gives safety instructions for the installation, commissioning, operation and maintenance of the drive.

Introduction to the manual introduces the manual.

Operation principle and hardware description describes the operation principle and construction of the drive.

Mechanical installation instructs how to move, place and mount the drive.

Planning the electrical installation provides advice on motor and cable selection, the protective functions of the drive, and cable sizes and routing.

Electrical installation instructs the electrical of the drive.

Installation checklist helps in checking the mechanical and electrical installation of the drive.

Maintenance contains preventive maintenance instructions.

Fault tracing contains troubleshooting instructions.

Technical data contains the technical specifications of the drive eg, ratings, frame sizes and technical requirements and provisions for fulfilling the requirements for CE and other markings.

Dimensions contains information on the dimensions of the drive.

Related documents

See the *List of related manuals* on the inside of the front cover.

Categorization by frame size and option code

The instructions, technical data and dimensional drawings which concern only certain drive frame sizes are marked with the symbol of the frame size (such as “2×R8i+2×R8i”, etc.). The frame size is not marked on the drive designation label. To identify the frame size of your drive, see section *Type equivalence table* on page *151*.

The instructions and technical data which concern only certain optional selections are marked with option codes eg, +E202.

The options included in the drive can be identified from the option codes visible on the type designation label. The option selections are listed in section *Type designation key* on page *51*.

Quick installation and start-up flowchart

Task	See
Plan the installation. Check the ambient conditions, ratings, required external cooling arrangements, input power connection, compatibility of the motor, motor connection, and other technical data. Select the cables.	*Technical data*, page *149* *Planning the electrical installation*, page *69* Option manuals (if optional equipment is included)
Unpack and check the units. Check the type code indicated by the type designation label with the original order. If the drive is about to be connected to an IT (ungrounded) system, check that the drive is not equipped with EMC filtering +E202. Check that all necessary optional modules and equipment are present and correct. Only intact units may be started up.	*Mechanical installation*, page *55* *Operation principle and hardware description*, page *27* For instructions on how to disconnect the EMC filtering, contact your local ABB representative. If the drive has been non-operational for more than one year, the drive DC link capacitors need to be reformed. Contact your local ABB representative for more information.
Check the installation site.	*Checking the installation site*, page *55*
Route the cables. Mount the cabinet line-up.	*Routing the cables,* page *81* *Mechanical installation*, page *55*
Check the insulation of the motor and the motor cable.	*Checking the insulation of the assembly,* page *93*
Connect the power cables. Connect the control and the auxiliary control cables.	*Electrical installation*, page *93*
Check the installation.	*Installation checklist*, page *111*
Start up the drive.	*Start-up,* page *113* and appropriate firmware manual

Terms and abbreviations

Term/Abbreviation	Explanation
AGPS	Gate driver power supply board. An optional board within drives, used to implement the Prevention of unexpected start function.
APBU	Optical branching unit for fiber links that use the PPCS protocol. The unit is used for connecting parallel-connected supply and inverter modules to the RDCU.
ASTO	Safe torque off board. An optional board used to implement the Safe torque off function.
Brake chopper	Conducts the surplus energy from the intermediate circuit of the drive to the brake resistor when necessary. The chopper operates when the DC link voltage exceeds certain maximum limit. The voltage rise is typically caused by deceleration (braking) of a high inertia motor.
Brake module	Brake chopper enclosed inside a metal enclosure. See *Brake chopper*.
Brake resistor	Dissipates the drive surplus braking energy conducted by the brake chopper to heat. Essential part of the brake circuit. See *Brake chopper*.
CMF	Common mode filtering
Common motor terminal cubicle	Cubicle with the busbars for the motor cable connection
DDCS	Distributed drives communication system; a protocol used in optical fiber communication inside and between ABB drives.
EMC	Electromagnetic compatibility
Frame (size)	Refers to power modules that share a similar mechanical construction, for example: • inverter modules of frame R8i • frame 2×R8i + 2×R8i includes two size R8i supply modules and two R8i inverter modules. To determine the frame size of a component, refer to section *Type equivalence table* on page *151*..
IGBT	Insulated gate bipolar transistor
IGBT supply module	Bidirectional IGBT bridge and related components enclosed inside a metal enclosure. Used as the supply module in regenerative and low-harmonic drives.
IGBT supply unit (ISU)	IGBT supply modules under control of one control board, and related components. See *IGBT supply module*.
Inverter	Converts direct current and voltage to alternating current and voltage.
Inverter module	Inverter bridge, related components and drive DC link capacitors enclosed inside a metal enclosure.
Inverter unit (INU)	Inverter module(s) under control of one control board, and related components. One inverter unit typically controls one motor. See *Inverter module*.
LCL filter	Inductor-capacitor-inductor filter for attenuating harmonics

Term/Abbreviation	Explanation
PPCS	Power plate communication system; a protocol used in the optical fiber link that controls the output semiconductors of a power module.
RAPI	Auxiliary power interface board
RDCU	Drive control unit. The RDCU is a separate unit consisting of an RMIO board built in a plastic housing.
RFI filter	Radio-Frequency interference filter.
RMIO	Motor control and I/O board. The RMIO is a versatile control board and an IO interface the use of which is determined by the control program loaded onto the board. The RMIO is widely used in the ACS800 product series, eg. for controlling drive modules, inverter units, supply units, cooling units, brake units, etc. See also RDCU.
STO	Safe torque off function
THD	Total harmonic distortion

Operation principle and hardware description

What this chapter contains

This chapter describes the operation principle and the construction of the drive in short.

Product overview

The ACS800-37LC is a low-harmonic, cabinet-installed liquid-cooled drive for controlling asynchronous AC induction motors and permanent magnet synchronous motors.

Operation principle

The drive consists of supply and inverter units which have their own RDCU control units and control programs. The parameters of each program can be viewed and changed using one control panel.

The line-side converter rectifies three-phase AC current to direct current for the intermediate DC link of the drive. The intermediate DC link is further supplying the motor-side converter that runs the motor.

The line-side converter is an active unit that, together with an LCL (inductor-capacitor-inductor) filter, enables low harmonic distortion at the input terminals of the drive.

By default, the line-side converter controls the DC link voltage to the peak value of the line-to-line voltage. The DC voltage reference can be set also higher by a parameter. The control of the IGBT power semiconductors is based on the direct torque control method also used in the motor control of the drive. Two line currents and the DC link voltage are measured and used for the control.

AC voltage and current waveforms

The AC current is sinusoidal at a unity power factor. The IGBT supply unit does not generate characteristic current or voltage overtones like a traditional 6- or 12-pulse bridge does.

The total harmonic distortion (THD) in voltage depends slightly on the short circuit ratio in the point of common coupling. The high-frequency switching and high du/dt slightly distort the voltage waveform at the input of the converter.

Typical line current (i_U) and phase voltage (u_U) waveforms are shown below.

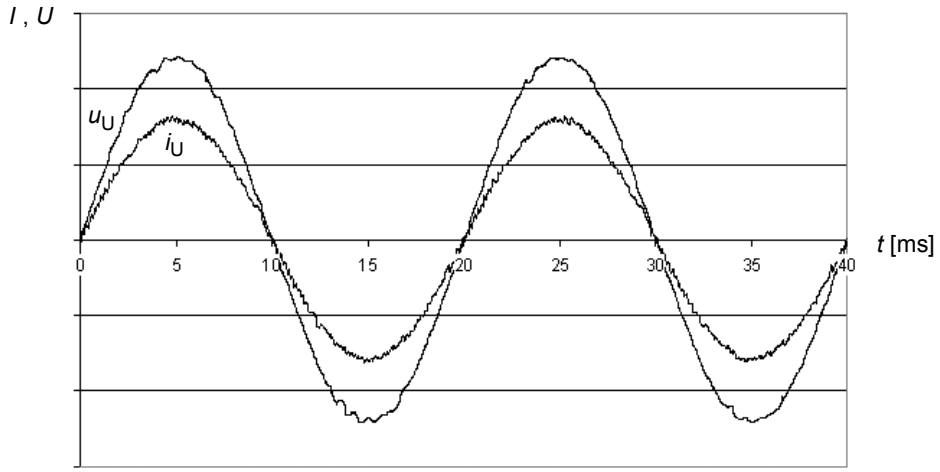

An example spectrum and THD value of the current at the input of the drive are shown below. Each harmonic is presented in percent of nominal current. *n* denotes the ordinal number of the harmonic.

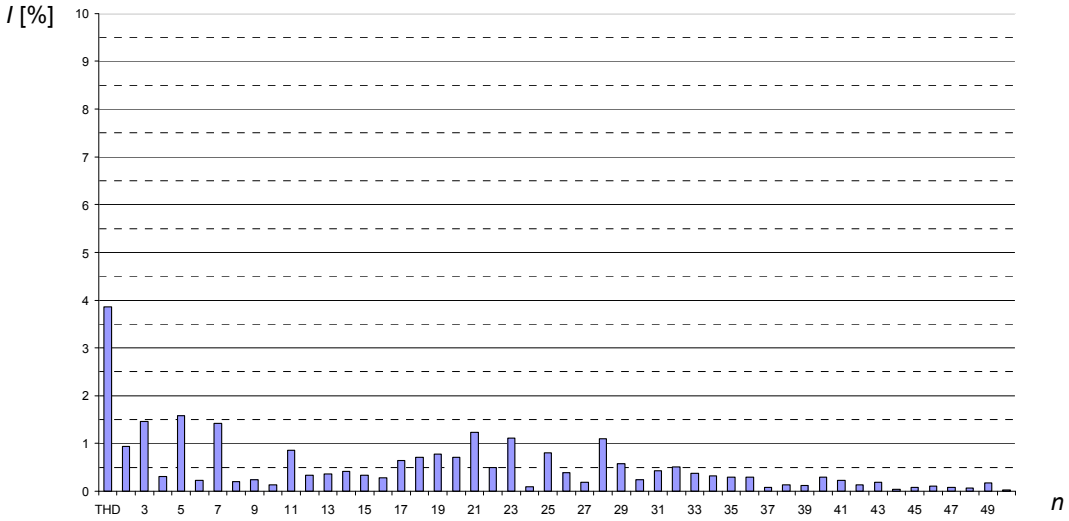

Single-line circuit diagram of the drive

Example circuit diagram (frames R7i+R7i and R8i+R8i)

This diagram represents frame R7i+R7i and R8i+R8i drives without any EMC, du/dt filter or brake options.

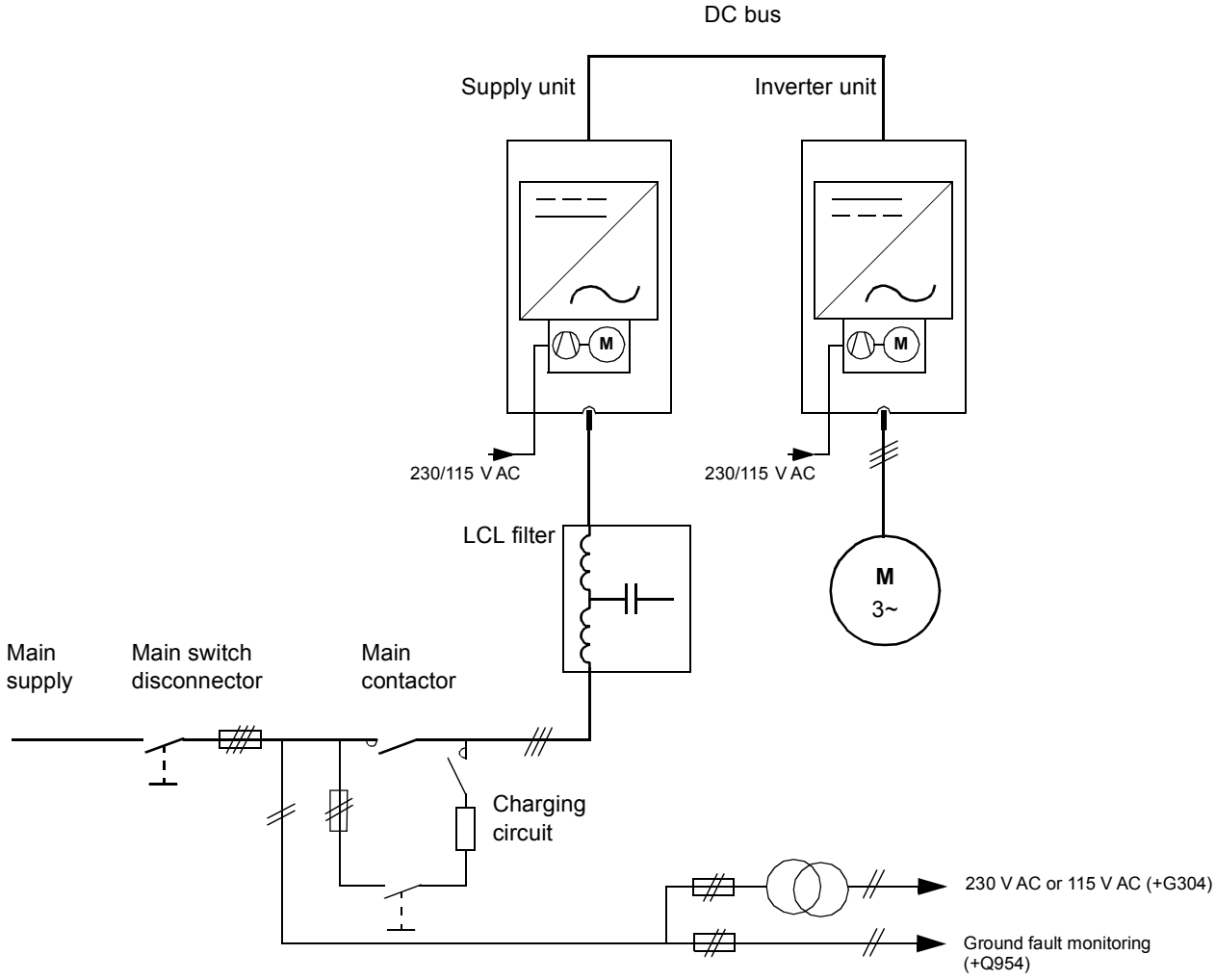

The supply unit and inverter unit have their own control boards (RDCU control units) and control programs.

Example circuit diagram (frame 2×R8i+2×R8i)

This diagram represents a frame 2×R8i+2×R8i drive without any EMC or brake options. Both the supply unit and the inverter unit consist of two parallel frame R8i converter modules.

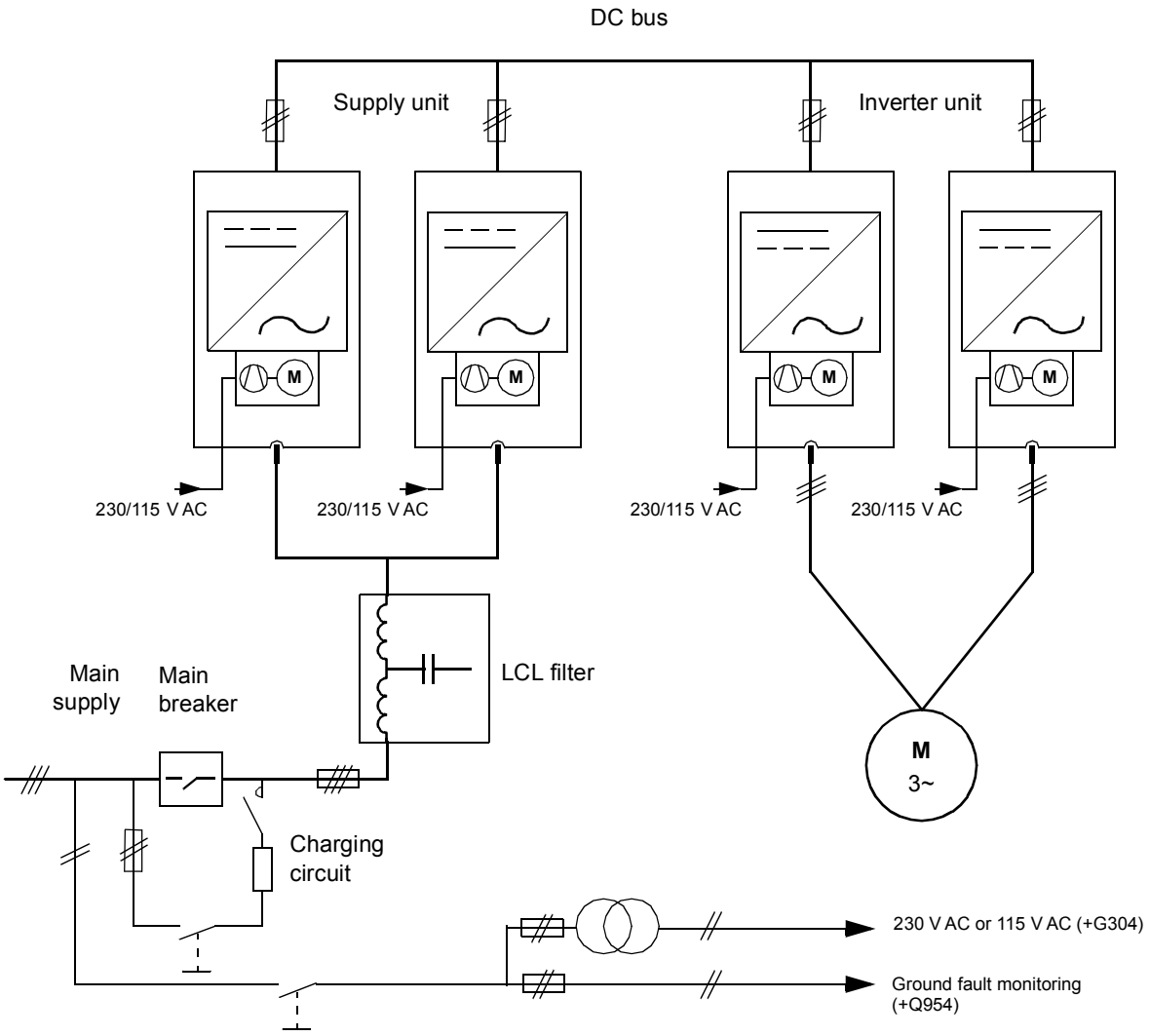

The supply unit and inverter unit have their own control boards (RDCU control units) and control programs.

Block diagram of the main circuit with options

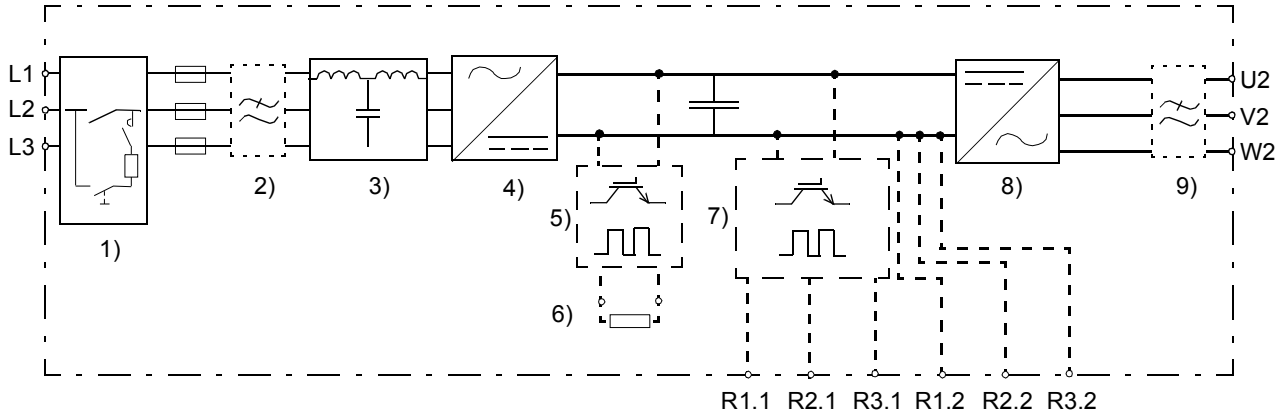

No.	Description	
1	Main switch and disconnector and charging circuit	
	Drives of frame sizes R7i+R7i and R8i+R8i are equipped with a main switch disconnector and contactor: 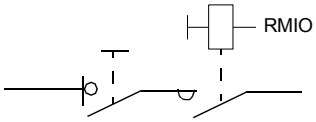	Drives of frame sizes n×R8i+n×R8i are equipped with an air circuit breaker: 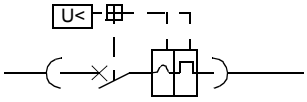
2	Optional EMC filter (+E202)	
3	LCL filter	
4	Supply module	
5	Brake chopper (option +D150)	
6	Brake resistors (option +D151)	
7	3-phase brake chopper (option +D152)	
8	Inverter module. The module is equipped with du/dt as standard. For frame R7i, the filter is optional (+E205)	
9	Sine filter (option +E206)	

General information on drive cabinet layout

The drive consists of cubicles that contain the supply, motor and auxiliary control connection terminals, 1 to 10 IGBT supply module(s) forming the supply unit, 1 to 9 inverter modules forming the inverter unit, and optional equipment. The actual arrangement of the cubicles varies from type to type and the selected options.

An example line-up is shown below: ACS800-37LC-1240-7+C141+D152.

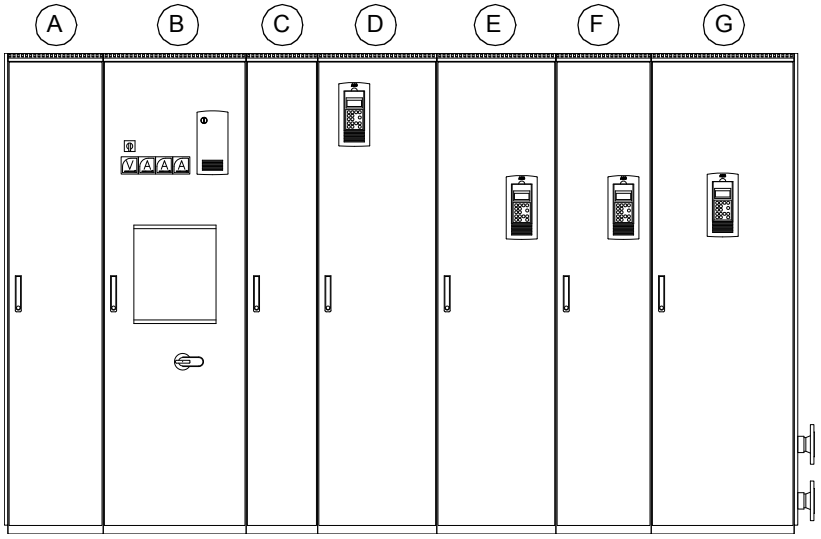

A	Auxiliary control cubicle (optional)
B	Incoming cubicle
C	LCL filter cubicle
D	Supply module cubicle
E	Inverter module cubicle
F	Brake chopper cubicle (option +D152)
G	Liquid cooling unit (option +C141)

Cabinet layout (frames R7i+R7i and R8i+R8i)

Doors closed

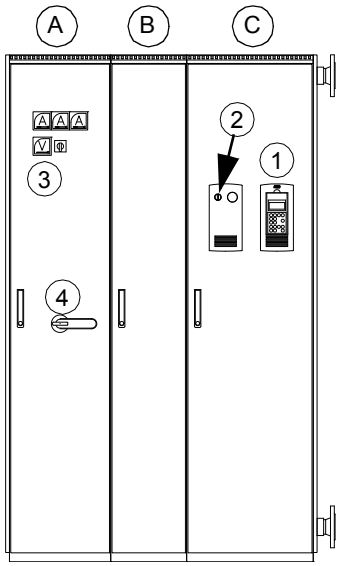

Doors open

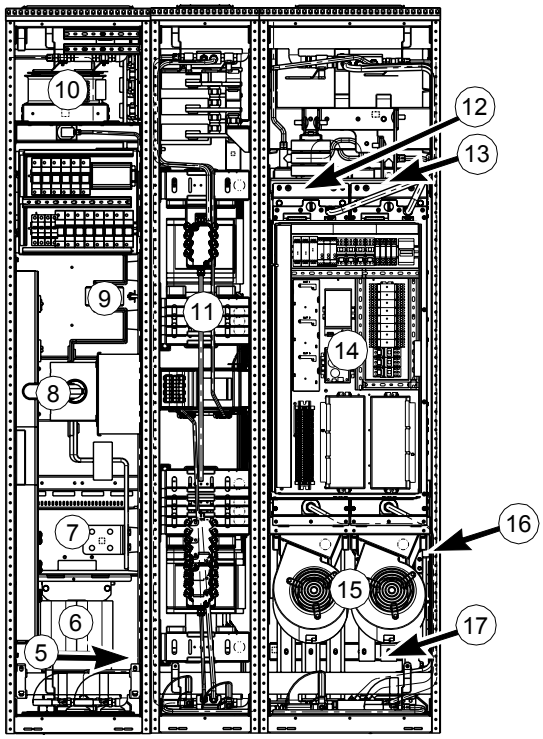

No.	Description
A	Incoming cubicle
B	LCL filter cubicle
C	Supply and inverter module cubicle
1	Drive control panel
2	Operating switch
3	Meters (optional)
4	Main switch handle
5	PE terminal (cabinet grounding busbar at the side of the cabinet)
6	Auxiliary voltage transformer (T10)
7	Input power cable connection terminals
8	Main switch
9	Input fuses
10	Cabinet fan
11	LCL filter
12	IGBT supply module (behind the swing-out frame)
13	Inverter module (behind the swing-out frame)
14	Swing-out frame with supply and inverter unit control electronics, I/O terminal blocks and communication options. See *Swing-out frame layout* on page *34*.
15	Cooling fans
16	Motor cable connection terminals (busbars behind the fan)
17	Motor grounding terminal (common cabinet grounding busbar behind the coolant pipe)

Swing-out frame layout

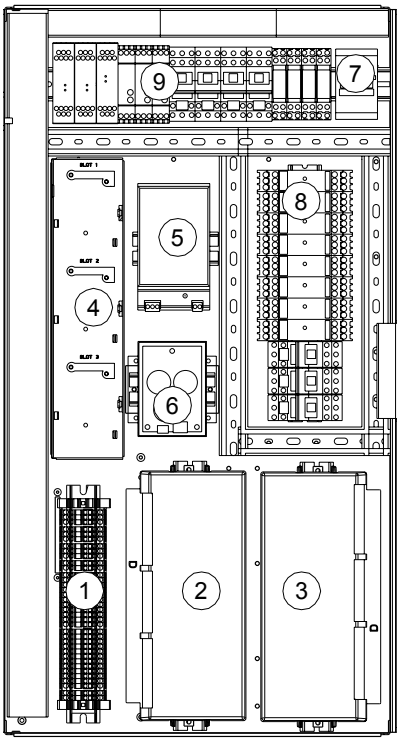

No.	Description
1	Terminal block of the inverter (option +L504). Hardwired to terminals of the inverter control board.
2	Inverter control unit (RDCU) including the control board (RMIO)
3	Supply control unit (RDCU) including the control board (RMIO)
4	I/O module adapter (AIMA, optional)
5	24 V DC power supply
6	24 V DC back-up accumulator (auxiliary power interface board [RAPI])
7	Relay for disconnecting the power supply for the cooling fans and connecting the heating on when the drive is powered but not running.
8	Pt100 relays for motor temperature supervision (option +L506)
9	Internal control relays

Auxiliary control cubicle layout

An optional 400 mm or 600 mm wide auxiliary control cubicle is available in frames 2×R8i and up. Some options, such as auxiliary voltage transformer, require an auxiliary control cubicle. A 600 mm wide cubicle is shown below.

Door closed

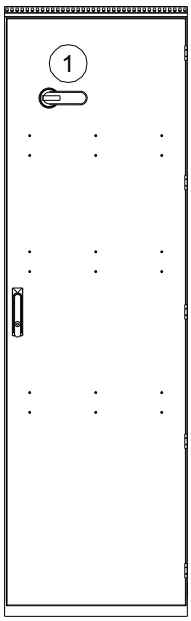

Door open

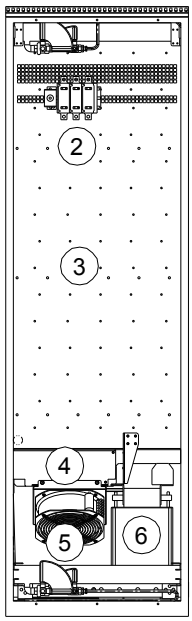

No.	Description
1	Handle of main switch for auxiliary circuits
2	Main switch for auxiliary circuits
3	Space for control relays, devices, etc.
4	Air to liquid heat exchanger
5	Cooling fan
6	Auxiliary voltage transformer (T10)

Main switch disconnecter cubicle layout (frames 2×R8i+2×R8i and up)

600 mm wide cubicle

Door closed *Door open*

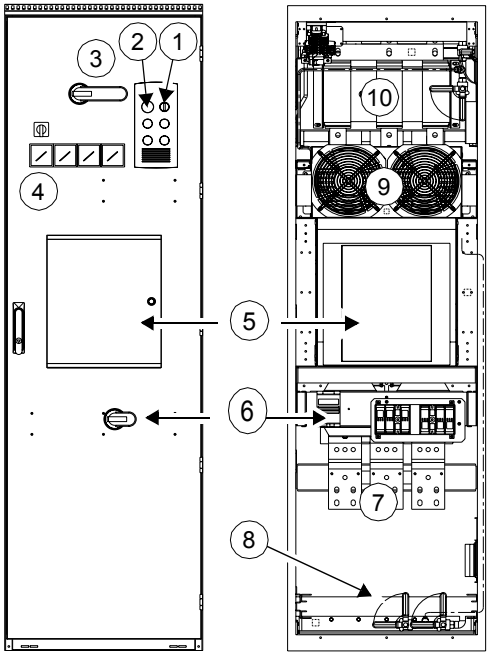

600 mm wide cubicle	
No.	**Description**
1	Operating switch of the supply unit (Off/ On/Start)
2	Emergency stop reset push button (option +G331)
3	Handle of grounding switch (option +F259)
4	Meters (options +G335, +3G335, +G334)
5	Main switch disconnector (air circuit breaker)
6	Charging circuit switch and handle
7	Busbars for input power cables
8	PE main busbar of the cabinet (behind the cooling liquid pipe)
9	Heat exchanger and fans
10	Grounding switch (option +F259)

1000 mm wide cubicle

Doors closed *Doors open*

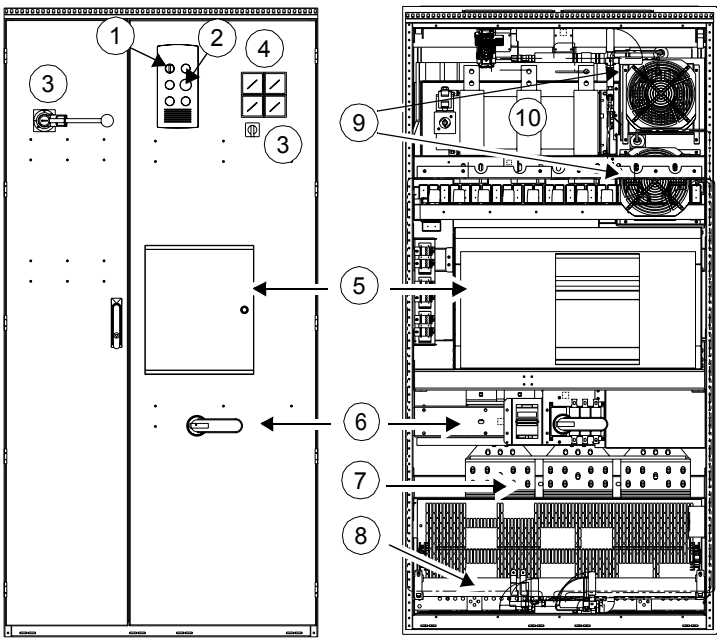

Layout of LCL filter and supply module cubicles (frame 2×R8i and up)

An example layout of the LCL and supply module cubicles of frame 2×R8i is shown below. The larger units employ similar cubicles in parallel.

Doors closed *Doors open*

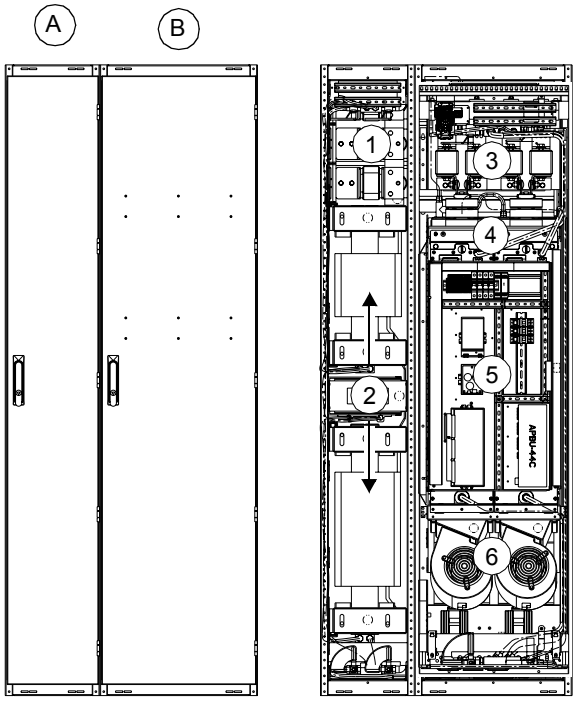

No.	Description
A	LCL filter cubicle
B	Supply module cubicle
1	AC fuses
2	LCL filter components (2×L, 1×C)
3	DC fuses
4	Supply modules (behind the swing-out frame)
5	Swing-out frame for the supply unit control electronics
6	Fans

Swing-out frame layout

The swing-out frame inside the supply module cubicle provides space for the control unit (RDCU), branching unit (APBU), I/O signal and auxiliary circuit terminal blocks, breakers and relays.

The frame can be opened by removing the mounting screws and moving the swing-out frame aside. Depending on selected options, the actual equipment may differ from what is depicted below.

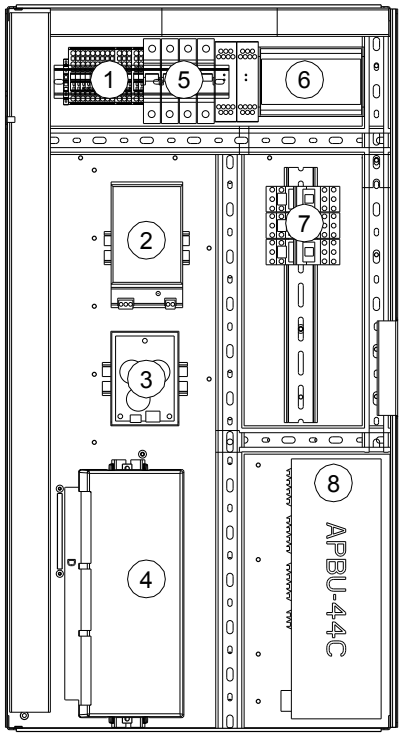

No.	Description
1	Auxiliary voltage distribution terminal block
2	24 V DC power supply
3	24 V DC back-up accumulator (auxiliary power interface board [RAPI])
4	Supply module control unit (RDCU) including the control board (RMIO)
5	Circuit breakers for auxiliary circuits
6	Ground fault monitoring relay (option +Q954)
7	Internal control relays
8	APBU Branching Unit with parallel supply modules

Layout of inverter module cubicle (frame 2×R8i)

2×R8i inverter units are installed in a cubicle as shown below.

No.	Description
1	Inverter unit control panel
2	Inverter unit LED panel (optional)
3	Handle with marine construction (option +C121)
4	DC fuses
5	Inverter modules (behind the swing-out frame)
6	Swing-out frame with inverter unit control electronics, I/O terminal blocks and communication options
7	Motor cable terminals (busbies behind the fans)
8	Terminal block for connection of prevention of unexpected start circuit (option +Q950)
9	Terminal block for connection of motor temperature supervision (option +L505 or +L506)
10	Fan
11	Motor grounding terminal (common cabinet grounding busby behind the coolant pipe)

2×R8i, door closed

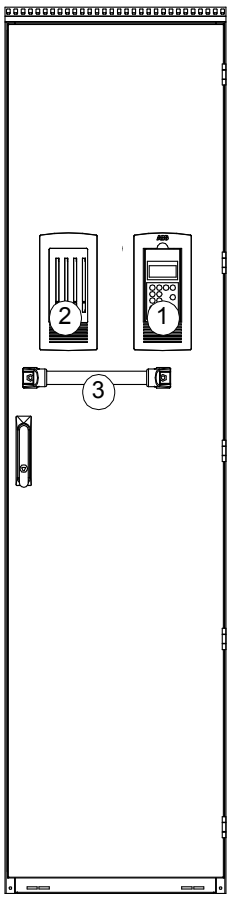

2×R8i, door open

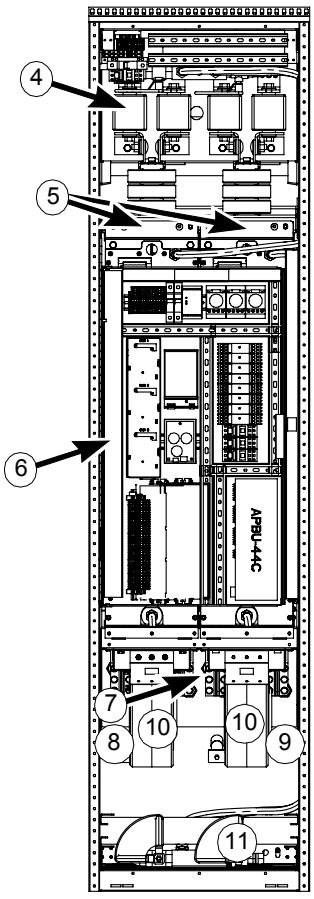

Layout of inverter module cubicle (frame 3×R8i)

3×R8i inverter units are installed in a 700 mm wide cubicle as shown below.

No.	Description
1	Inverter unit control panel
2	Inverter unit LED panel (optional)
3	Handle with marine construction (option +C121)
4	DC fuses
5	Inverter modules (behind the swing-out frame)
6	Swing-out frame with inverter unit control electronics, I/O terminal blocks and communication options
7	Motor cable terminals (busbies behind the fans)
8	Terminal block for connection of prevention of unexpected start circuit (option +Q950)
9	Motor grounding terminal (common cabinet grounding busby behind the coolant pipe)
10	Fans
11	Terminal block for connection of motor temperature supervision (option +L505 or +L506)

3×R8i, door closed

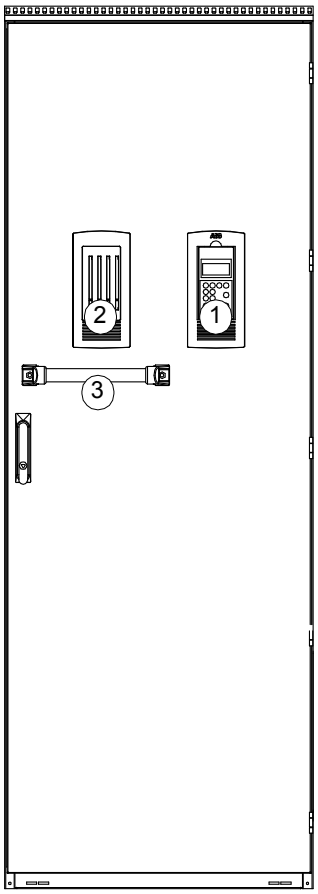

3×R8i, door open

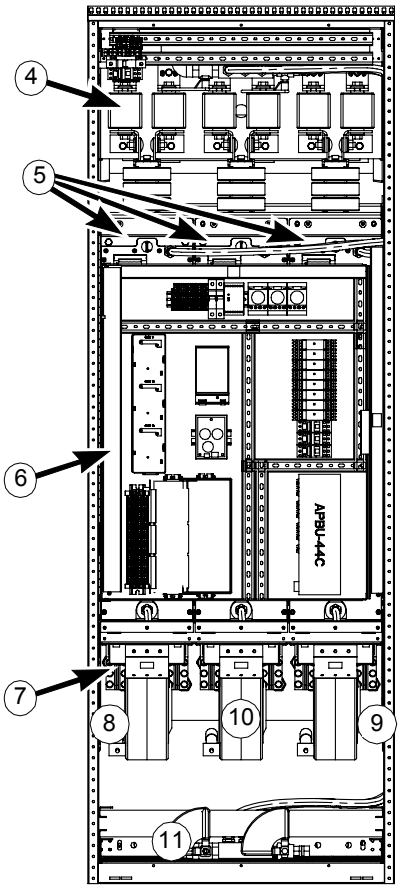

Layout of inverter module cubicles (frames 4×R8i to 9×R8i)

Inverter units of frames 4×R8i to 9×R8i are composed of parallel-connected 2×R8i and 3×R8i cubicles.

Swing-out frame layout of the inverter module cubicles

The swing-out frame inside the inverter module cubicle provides space for the control unit (RDCU), branching unit (APBU), I/O signal and auxiliary circuit terminal blocks, breakers and relays.

The frame can be opened by removing the mounting screws and moving the swing-out frame aside. Depending on selected options, the actual equipment may differ from what is depicted below.

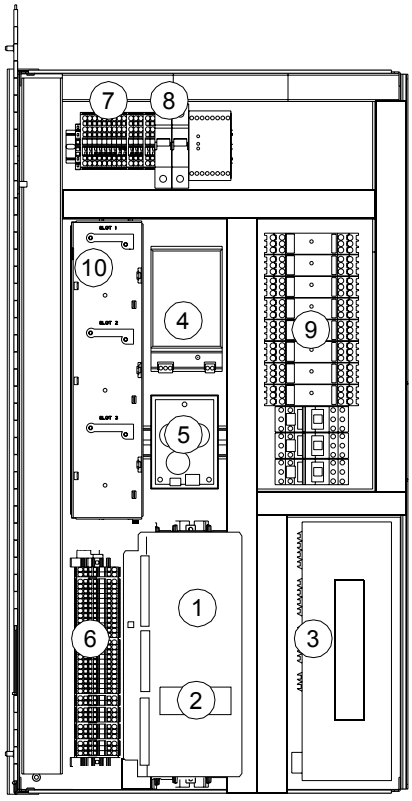

No.	Description
1	Inverter control unit (RDCU) including the control board (RMIO)
2	RDCO DDCS Adapter Module (options +L508 and +L509)
3	APBU Branching Unit with parallel-connected inverter modules
4	24 V DC power supply
5	24 V DC back-up accumulator (Auxiliary Power Interface Board [RAPI])
6	Terminal block for external IO connections, hard wired to RDCU terminals (option +L504)
7	Terminal blocks for auxiliary voltage distribution
8	Auxiliary circuit breakers
9	Relays for motor temperature supervision (options +L505 and +L506)
10	AIMA I/O Module Adapter (optional)

Overview of supply and inverter modules (R7i and R8i)

The figure below shows the supply/inverter module of size R7i and R8i. The control unit containing the RMIO board is external and located in the swing-out frame of the module cubicle. The control unit is connected to the inverter module(s) by a fiber optic link, distributed through an optical branching unit. In the inverter modules, the optic link connects to the AINT board, the terminals of which are accessible through a hole on the front panel of the module.

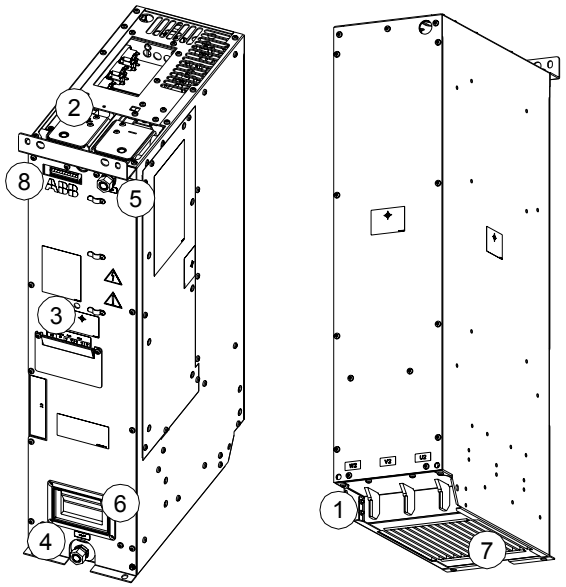

1	AC busbars/knives (U2,V2,W2). Fit into quick connector on the rear assembly plate of the cabinet.
2	DC busbars (+, -)
3	Fiber optic connectors. V1, V2: control board (RMIO) connection. Other fiber optic connectors are not in use in supply units.
4	Coolant in connection
5	Coolant out connection
6	Handle
7	Air/liquid heat exchanger
8	Terminal block X17 (not in use in supply modules)

Overview of power and control connections

The following diagram shows the power connections, control interfaces and I/O options of the drive.

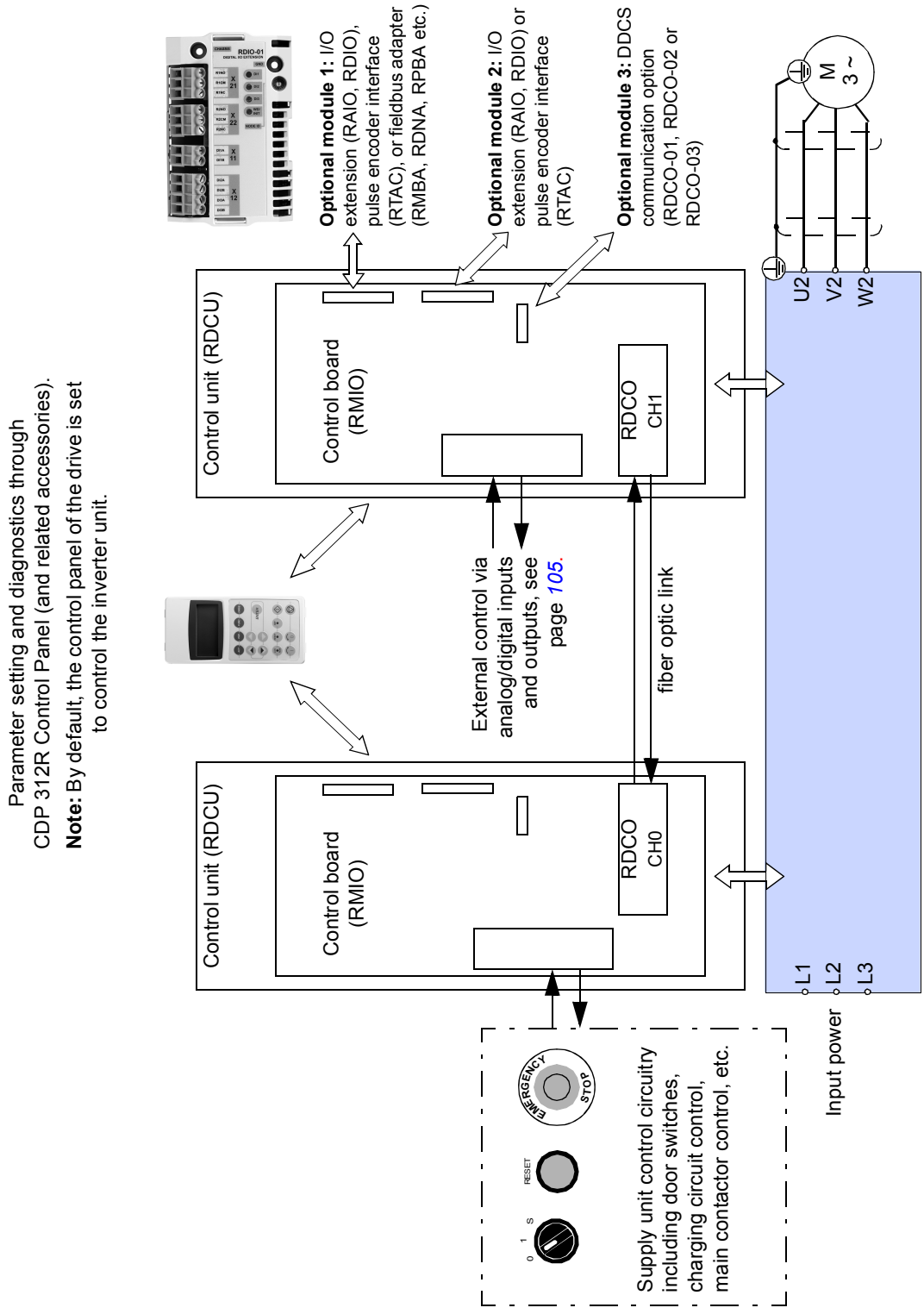

Control of the supply unit

As standard, the user controls the supply unit solely by the operating switches on the cabinet door (start/stop). The door switches are connected to the I/O interface of the supply unit at the factory. The wiring may not be changed by the user. In most cases, the user does not need any other means to control the supply unit. However, it is also possible to control the supply unit with the control panel or through a fieldbus. The use of the panel is possible when the panel is not needed for the control of the inverter, for example during a start-up or testing of the supply unit. The fieldbus control is possible when the control unit of the supply unit has been equipped with an optional fieldbus adapter module.

For more information on the control through the fieldbus, see the appropriate firmware manual.

Main switch-disconnector Q1 (frames R7i+R7i and R8i+R8i)

The switch-disconnector handle switches the main and auxiliary voltages to the drive on and off.

Supply transformer disconnecting push button (+Q959)

The red push button disconnects the control voltage from the supply transformer breaker. The push button is added on the cabinet door at the factory by ABB. The installer of the drive must wire the button to the breaker control circuit on the installation site.



Operating switch



0	Stops the supply unit and the drive, opens the main contactor/breaker and stops the cooling fans.
1	Keeps the main contactor/breaker closed and the supply unit in operation (on command. Normal operation.
S	Charges the intermediate DC circuit before closing the main contactor/ breaker and starts the cooling fans.

Auxiliary power switch Q100 (frame sizes 2×R8i and up)

The auxiliary power switch controls all auxiliary voltages in the cabinet including the DC link charging circuit. The auxiliary power switch must be closed before the drive can be started.

Grounding switch Q9 (option +F259)

When closed, the optional grounding switch connects the supply phases L1, L2 and L3 to PE. The switch is interlocked with the main contactor/breaker control circuit: The switch cannot be closed if the contactor/breaker is closed. The main contactor/ breaker cannot be closed before the grounding switch has been opened.

Emergency stop push button

An emergency stop button is included with options +Q951 and +Q952.



Reset button

A reset button is included with options +Q951 and +Q952. The button resets an emergency stop, after which the supply unit can be started using the operating switch.

Note: Drive faults are reset via the drive control panel or serial communication.

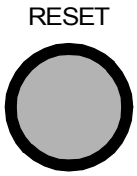

Connections and use of the I/O in the supply unit

The table and the figure below describe the connections and use of the I/O in the supply unit. The use of I/O is fixed in the supply unit control program and the wiring to RMIO terminals are made accordingly at the factory. The settings of the supply control program and the connections of the supply unit I/O must not be changed by the user.

IO	Name	Use in the control program	Connected device / Purpose
RDCU standard I/O channel			
AI1	Not in use	Not in use as default.	Not in use as default.
A12	Not in use	Not in use as default.	Not in use as default.
AI3	Not in use	Not in use as default.	Not in use as default.
DI1	ALARM / FAULT	Overtemperature supervision: 1->0: Alarm. 0: Fault (after preset time delay).	LCL filter temperature sensors (in series)
DI2	Not in use	Not in use as default.	Not in use as default.
DI3	ACK MAIN CONTACTOR	Main breaker/contactor supervision. 1: closed (enables supply unit start)	Contact in main breaker/contactor control circuit
DI4	EARTH FAULT	Ground fault supervision. Can be activated or inactivated by parameter. 1: No fault. Not in use as default.	Insulation monitoring device (option +Q954)
DI5	ALARM / FAULT	Supervision of cooling unit. Can be activated or inactivated by parameter. 1->0: Alarm. 0: Fault (after preset time delay). Not in use as default.	Cooling unit monitoring circuit. Not in use but hard-wired to +24 V DC of RDCU when no optional cooling unit is in use.
DI6	RESET	Supply module reset. 1: Reset.	Not connected as default. Fault reset can be given from control panel.
DI7 (DIIL)	ON / OFF	Supply module on/off control. 0->1: On. 0: Off.	Operating switch, control circuitry
RO1	CHARGING	On/off control of charging contactor. 1: On.	Charging circuit control relay
RO2	LCU ON / OFF	Liquid cooling unit on/off control. 1: On.	Cooling unit control relay. Not connected when no optional cooling unit (+C139, +C140 or +C141) is in use.
RO3	MAIN CONTACTOR CONTROL	Main breaker/contactor control. 1: On.	Breaker control circuit

Connections to standard I/O terminals

Terminal block size:
cables 0.3 to 3.3 mm^2 (22 to 12 AWG)
Tightening torque:
0.2 to 0.4 N·m (0.2 to 0.3 lbf·ft)

Control circuitry

Operating switch

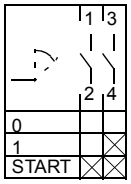

Main breaker/contactor

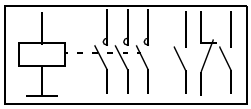

Charging contactor

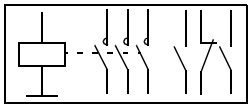

1) Not in use as default.

For details, see the delivery-specific circuit diagrams of the drive. The diagrams show:
- supply unit on/off control
- main breaker supervision and on/off control
- charging contactor on/off control
- optional auxiliary circuit wiring.

WARNING! Starting sequence ie, charging, acknowledgements, main breaker/contactor control and the supply unit start, follows a certain order. Never change the order by by-passing signals (using jumpers), etc. That will cause a malfunction that may damage the unit.

X20

1	VREF-	Reference voltage -10 V DC, 1 kohm ≤ R_L ≤ 10 kohm
2	AGND	

X21

1	VREF+	Reference voltage 10 V DC, 1 kohm ≤ R_L ≤ 10 kohm
2	AGND	
3	AI1+	Not in use. 1) 0(2)…10 V, R_{in} > 200 kohm
4	AI1-	
5	AI2+	Not in use. 1) 0(4)…20 mA, R_{in} = 100 ohm
6	AI2-	
7	AI3+	Not in use. 1) 0(4)…20 mA, R_{in} = 100 ohm
8	AI3-	
9	AO1+	Not in use. 1) 0(4)…20 mA, R_L ≤ 700 ohm
10	AO1-	
11	AO2+	Not in use. 1) 0(4)…20 mA, R_L ≤ 700 ohm
12	AO2-	

X22

1	DI1	Alarm / Fault
2	DI2	Not in use
3	DI3	Acknowledgement of main contactor
4	DI4	Ground fault 1)
5	DI5	Alarm/Fault 1)
6	DI6	Reset 1)
7	+24V	+24 V DC max. 100 mA
8	+24V	
9	DGND1	Digital ground
10	DGND2	Digital ground
11	DIIL	On/Off

X23

1	+24V	Auxiliary voltage output, non-isolated, 24 V DC 250 mA
2	GND	

X25

1	RO1	Charging contactor control: open (0) / close (1)
2	RO1	
3	RO1	

X26

1	RO2	LCU control: off (0) / on (1)
2	RO2	
3	RO2	

X27

1	RO3	Main breaker/contactor control: open (0) / close (1)
2	RO3	
3	RO3	

Control of the inverter unit and motor

As standard, the drive is equipped with one control panel (type CDP-312R) on the inverter module cubicle door. The user controls the motor with this control panel or through fieldbus when the control unit of the inverter unit is equipped with an optional fieldbus adapter module.

Control panel

The control panel is the user interface of the supply and inverter units of the drive, providing the essential controls such as Start/Stop/Direction/Reset/Reference, and the parameter settings for the control programs. The suffix “LM” on the control panel display denotes ACS800-37LC. More information on using the panel can be found in the inverter unit firmware manual delivered with the drive.

The control panel is wired to the supply unit and inverter unit using a Y-splitter.

Connections and use of the I/O in the inverter unit

See page *105*.

Circuit boards

Abbr.	Description
RDCU	Drive control unit. Note that in units with several modules in parallel, there is a branching unit (APBU or NPBU) between the modules and the control unit. [1)]
RMIO	Control board
APOW	Power supply board
NRED	Voltage reduction board in 690 V units
AINT	Main circuit interface board
AGDR	Gate driver board (interface to IGBTs)

[1)] The RDCU is equipped with an auxiliary power interface board (RAPI) when not equipped with terminals for connecting external control voltage (option +G307). The RAPI ensures that the “POWER FAIL” function of the RMIO board can be carried out in case the 24 V auxiliary power to the RDCU is interrupted ie, the fault and alarm loggers have enough time to write collected data into the flash memory.

Type designation labels

Drive label

The type designation label of the drive includes an IEC rating, CE, C-UL US, and CSA markings, a type designation and a serial number, which allow individual recognition of each unit. The first digit of the serial number refers to the manufacturing plant. The next four digits refer to the unit's manufacturing year and week respectively. The remaining digits complete the serial number so that there are no two units with the same serial number. The type designation label is located on the front cover. An example label is shown below.



No.	Description
1	Ratings
2	Type designation. See section *Type designation key* (page *51*).
3	Serial number

Supply, inverter and brake module label

The type designation label of the converter module includes the ratings, valid markings, a type code and a serial number. The module label is attached to the front panel of the module.

An example type designation label of the ACS800-104LC inverter, supply and brake module is shown below.

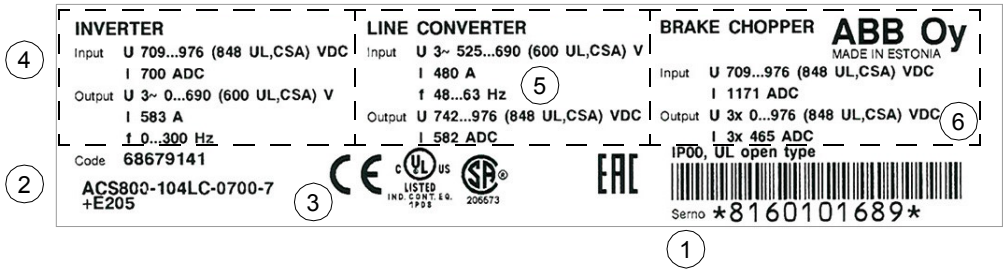

ABB Oy
Hiomotie 13
00380 Helsinki
Finland
Liquid cooling

No.	Description
1	Serial number. The first digit of the serial number refers to the manufacturing plant. The next four digits refer to the unit's manufacturing year and week, respectively. The remaining digits complete the serial number so that there are no two units or modules with the same number.
2	Type code. See section *Type designation key* below.
3	Valid markings
4	Ratings of converter module when in inverter use
5	Ratings of converter module when in supply module use
6	Ratings of converter module when in brake use

Type designation key

The type code of the drive is indicated on its type designation label. The type code contains information on the specifications and configuration of the drive. The first digits from left and separated with hyphens express the basic configuration, for example ACS800-37LC-0250-5. The optional selections are given thereafter, separated by plus signs, for example +L501. For more information refer to, *ACS800-37LC Ordering information* (3AXD1000006878), available on request.

Type code of the basic configuration

Digit	Name/Description	Alternatives
1…6	Product series	ACS800
8…11	Product type	37LC – Cabinet-installed liquid-cooled regenerative drive*
13…16	Size	Refer to the rating tables, page *149*
18	Voltage rating	4 – Voltage range 380…415 V AC
		5 – Voltage range 440…500 V AC
		7 – Voltage range 525…690 V AC

* When no options are selected: IP42 (UL Type 1), main switch disconnector (load switch and contactor in frames R7i+R7i and R8i+R8i or air circuit breaker in frames 2×R8i+2×R8i and up), aR fuses, 230 V AC control voltage, CDP312R Control Panel, EMC filter for 2nd environment (+E200), du/dt limitation by choke (frames R8i+R8i and up, +E205), common mode filter (+E208), Standard Control Program, bottom entry and exit of cables, cable lead-through entries, coated boards, CD containing all manuals, IEC approved components, RDCO-03 module for communication link between the supply and inverter modules.

Note: The option codes of the basic configuration are not shown on the type designation label.

Option codes

Class	Code	Description
Degree of protection	B055	IP54 (UL Type 12). Not available with +C134.
Construction	C121	Marine construction (reinforced mechanics and fastening, marking of conductors according to +G341, marine door handles, self extinctive materials)
	C129	UL Listed (115 V AC auxiliary voltage, cable conduit entries, all components UL Listed or Recognized, max. supply voltage 600 V)
	C134	CSA Approved (as +C129, with CSA approved components)
	C139	Stand alone liquid cooling unit (195 kW)
	C140	Single-pump liquid cooling unit (70 kW). The cooling unit will be connected to the line-up at the factory, pipe connection on the right side, DIN flanges, industrial water. Control panel CDP312R included on the cubicle door. ACS800-37LC-xxxx-5 units: External power supply for pump motors is required, refer to options +M633, +M634.
	C141	Two-pumps liquid cooling unit (195 kW). The cooling unit will be connected to the line-up at the factory, pipe connection on the right side, DIN flanges, industrial water. Control panel CDP312R included on the cubicle door. ACS800-37LC-xxxx-5 units: External power supply for pump motors is required refer to options +M633, +M634.
	C142	Bottom pipe connection
	C144	Pipe connection on the left side of the cabinet. Not available with +C139 and +C140.
	C145	ANSI flanges
	C146	Sea water heat exchanger
	C147	3-way valve for liquid cooling unit in an additional cubicle

Class	Code	Description
Resistor braking	D150	Brake choppers of type NBRW (for 690 V units only)
	D151	Brake resistors in a separate IP21 cubicle. Available with +D150 only. Not available with +C129.
	D152	3-phase brake choppers. Control panel CDP312R included on the cubicle door.
Filters	E202	EMC filter for first environment TN (grounded) system, category C2. Not available for units with rated current $I_{cont.max}$ above 1000 A.
	E205	du/dt filter for frame R7i
	E206	Sine output filter. Air-cooled, IP21. Not available for +C121, +C129 or +C134.
	E214	RFI filter for marine applications.
Line options	F271	Knobs for grounding the AC output busbars temporarily. Available with +H359 only.
	F259	Grounding switch. Not available with options +C129 and +C134 or frames R7i+R7i and R8i+R8i.
Heaters and auxiliary control voltage	G300	Cabinet heater (external supply)
	G304	115 V AC control voltage
	G307	Terminals for connecting external control voltage (230 V AC or 115 V AC uninterruptible power supply)
	G313	Output for motor heater (external supply)
Materials	G330	Halogen-free wiring and materials. Not available with +C129 and +C134.
Push buttons	G331	Emergency stop push button (red) and reset button (blue lighted) on the cabinet door
	G332	Electrical disconnecting push button on the door (black)
Meters	G335	A-meter in one phase
	3G335	A-meter in three phases
	G334	V-meter with selector switch
Wire markings	G338	Equipment pin numbers are printed on wires between modules and on wires connected to equipment.
	G339	Equipment and terminal block pin numbers are printed on wires between modules and on wires connected to equipment and terminal blocks. Main circuit conductors are marked.
	G340	Equipment pin numbers are marked with rings on wires between modules and on wires connected to equipment, terminal blocks and detachable screw terminals. Main circuit conductors are marked.
	G341	Equipment identifications and terminal block pin numbers are marked by rings on optical fibers, on wires between modules, and on wires connected to equipment, terminal blocks and detachable screw terminals. Main circuit conductors and also short and obvious connections are marked.
	G342	Equipment identifications and terminal block pin numbers and remote addresses are marked by rings on optical fibers, on wires between modules, and on wires connected to equipment, terminal blocks and detachable screw terminals. Main circuit conductors and also short and obvious connections are marked.
Cabling	H351	Top entry of cables
	H353	Top exit of cables
	H358	Cable gland plates (steel 3 mm, undrilled)
	H359	Motor cable terminal cubicle
	H364	Cable gland plates (aluminium 3 mm, undrilled)
	H365	Cable gland plates (brass 6 mm, undrilled)

Class	Code	Description
Fieldbus adapter modules	K...	+K451: RDNA-01 DeviceNet™ adapter module +K452: RLON-01 LonWorks® adapter module +K453: NIBA-01 InterBus-S adapter module +K454: FPBA-01 PROFIBUS DP adapter module +K455: NMBA-01Modbus Plus +K457: RCAN-01 CANopen adapter module +K458: RMBA-01 Modbus adapter module +K462: RCNA-01 ControlNet™ adapter module +K466: RETA-01 Ethernet adapter module (EIP, MB/TCP) +K467: RETA-02 Ethernet adapter module (PROFINET IO, Modbus TCP) +K469: RECA-01 EtherCAT adapter module +K470: REPL-01 Ethernet POWERLINK adapter module
I/O extensions and feedback interfaces	L...	+L500: RAIO-01 analog I/O extension module +L501: RDIO-01 digital I/O extension module +L502: RTAC-01 pulse encoder interface +L504: Additional I/O terminal block +L505: PTC thermistor relay (one or two pcs). Not available with +L506 or +L513. +L506: Pt100 relay (three, five or eight pcs). Not available with +L506 or +L513. +L508: RDCO-01 DDCS communication module +L509: RDCO-02 DDCS communication module +L513: ATEX-certified thermal protection interface for PTC thermistor relays. Available with +Q950 only. +L517: RTAC-03 pulse encoder interface (TTL) module
Starter for auxiliary motor fan (M600 to M605) and terminals for external voltage supply for liquid cooling unit's pump	M600	Trip limit setting range: 1…1.6 A
	M601	Trip limit setting range: 1.6…2.5 A
	M602	Trip limit setting range: 2.5…4 A
	M603	Trip limit setting range: 4…6.3 A
	M604	Trip limit setting range: 6.3…10 A
	M605	Trip limit setting range: 10…16 A
	M633	Terminals for 380…415 V 50 Hz or 380…480 V 60 Hz external power supply of the liquid cooling unit's pump
	M634	Terminals for 660…690 V 50 Hz or 660…690 V 60 Hz external power supply of the liquid cooling unit's pump
Programs and functions in memory unit	N...	+N651: Master follower program (includes fiber optic cables). Available with +L509 only. +N653: Application base control program +N655: PCP/ESP control program +N660: Inline control program +N661: Winder control program +N669: Centrifuge control program +N671: System control program +N673: Special control program +N675: Rod pump control program +N677: Permanent magnet synchronous machine control program +N678: Test bench control program +N679: Standard control program +N682: Multi block programming program +N685: Motion control program +N687: Pump control program +N697: Crane control program +N698: Winch control program
Specialities	P902	Customized
	P904	Extended warranty
	P913	Special color

Class	Code	Description
Paper manuals	R…	+R700: English +R701: German +R702: Italian +R705: Swedish +R706: Finnish +R707: French **Note:** The delivered manual set may include manuals in English if the translation is not available.
Safety	Q950	Prevention of unexpected start
	Q951	Emergency stop of Category 0 with opening the main breaker/contactor, see also +G331
	Q952	Emergency stop of Category 1 with opening the main breaker/contactor, see also +G331
	Q954	Ground fault monitoring for IT (ungrounded) systems
	Q963	Emergency stop of Category 0 without opening the main breaker/contactor, see also +G331
	Q964	Emergency stop of Category 1 without opening the main breaker/contactor, see also +G331
	Q959	Supply transformer breaker disconnecting push button (red) on cabinet door
	Q968	Safe torque off function with safety relay

Mechanical installation

What this chapter contains

This chapter describes the mechanical installation procedure of the drive.

Checking the installation site

See *Ambient conditions* on page *169* for allowable operating conditions, and *Dimensions, weights and free space requirements* on page *158* for requirements for free space around the unit.

The unit must be installed in an upright vertical position.

The floor that the unit is installed on must be of non-flammable material, as smooth as possible, and strong enough to support the weight of the unit. The floor flatness must be checked with a spirit level before the installation of the cabinets into their final position. The maximum allowed deviation from the surface level is 5 mm in every 3 metres. The installation site should be levelled, if necessary, as the cabinet is not equipped with adjustable feet.

The wall behind the unit must be of non-flammable material.

Note: Wide cabinet line-ups are delivered as “shipping splits”.

Required tools

The tools required for moving the unit to its final position, fastening it to the floor and tightening the connections are listed below.

- crane, fork-lift or pallet truck (check load capacity!); iron bar, jack and rollers
- Pozidrive and Torx (2.5–6 mm) screwdrivers for the tightening of the frame screws
- torque wrench
- set of wrenches or sockets for joining shipping splits.

Checking the delivery

The drive delivery contains:

- drive cabinet line-up
- optional modules (if ordered) installed into the control rack at the factory
- winch for the supply and inverter module replacement (if ordered)
- installation stand (delivered in a separate pallet)
- appropriate drive and optional module manuals
- delivery documents.

Check that there are no signs of damage. Before attempting installation and operation, check the information on the type designation label of the drive to verify that the delivery is of the correct type. See *Type designation key* on page *51*.

Moving the unit

Moving the unit by crane

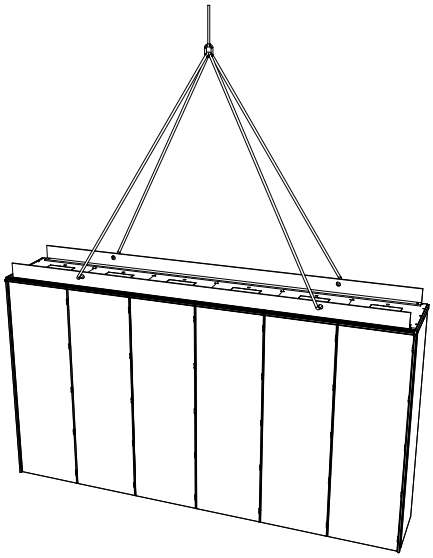

Use the steel lifting bars attached to the top of the cabinet. Insert the lifting ropes or slings into the holes of the lifting bars.

The lifting bars can be removed (not mandatory) once the cabinet is in its final position. **If the lifting bars are removed, the bolts must be refastened to retain the degree of protection of the cabinet.**

Moving the unit by fork-lift or pallet truck

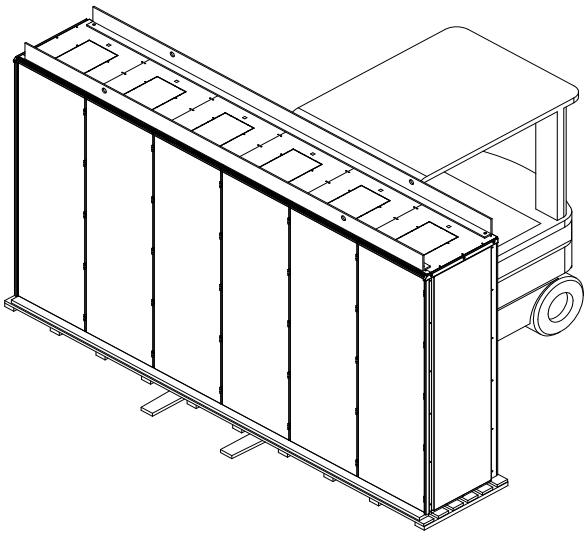

The centre of gravity is high. Be therefore careful when transporting the unit. Avoid tilting the cabinets.

The units are to be moved only in the upright position.

If using a pallet truck, check its load capacity before attempting to move the unit.

Moving the unit on rollers (not allowed with marine cabinets)

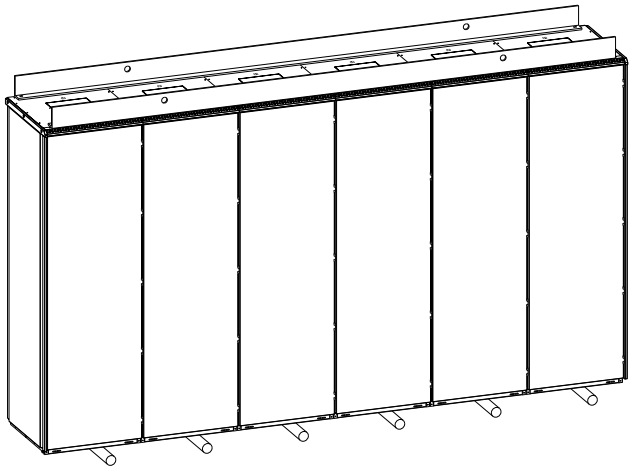

Remove the wooden bottom frame which is part of the shipment.

Lay the unit on the rollers and move it carefully until close to its final location.

Remove the rollers by lifting the unit with a crane, fork-lift, pallet truck or jack as described above.

Laying the unit on its back

It is not allowed to transport or lay the unit on its back.

Placing the unit

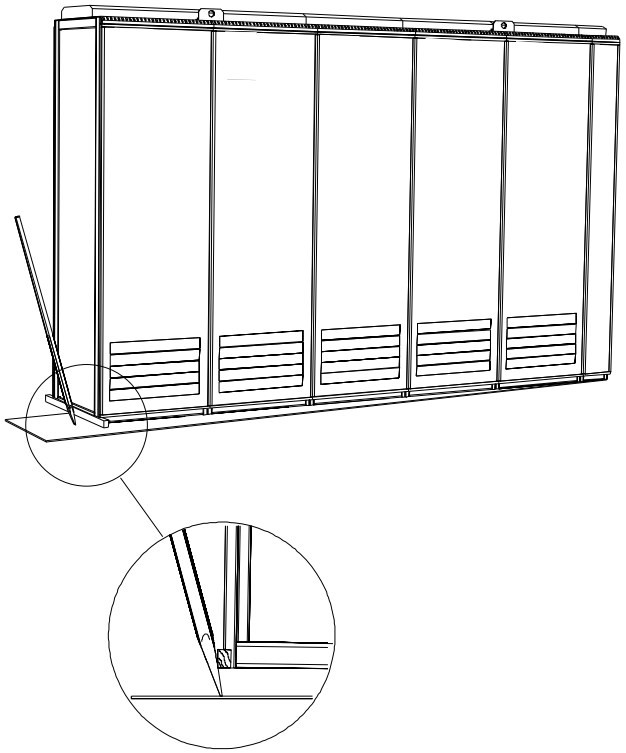

The cabinet can be moved into its final position with an iron bar and a wooden piece at the bottom edge of the cabinet. Care is to be taken to properly place the wooden piece so as not to damage the cabinet frame.

Overview of the installation procedure

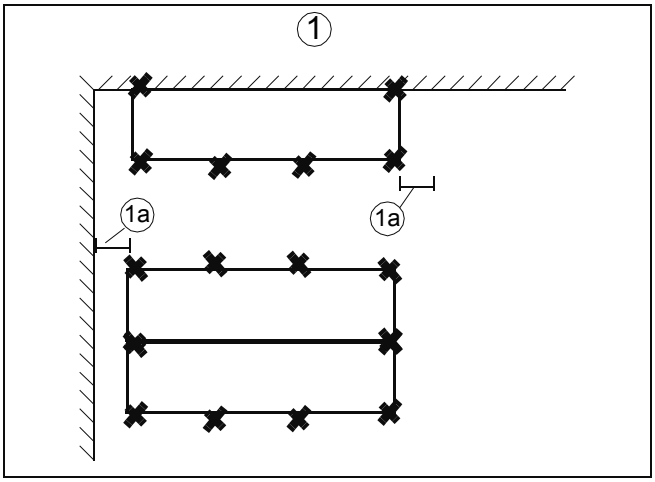

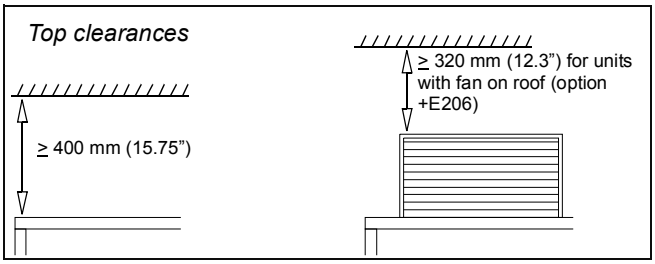

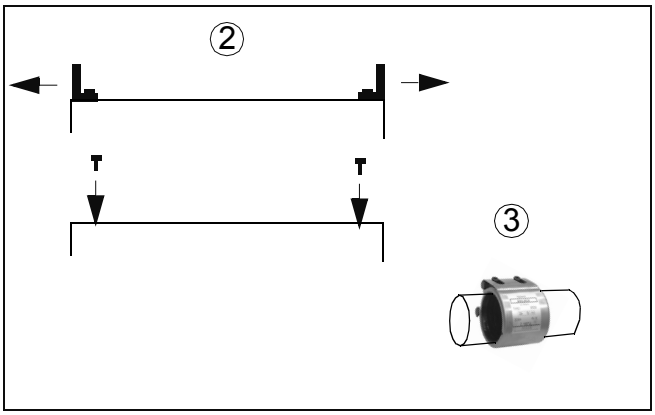

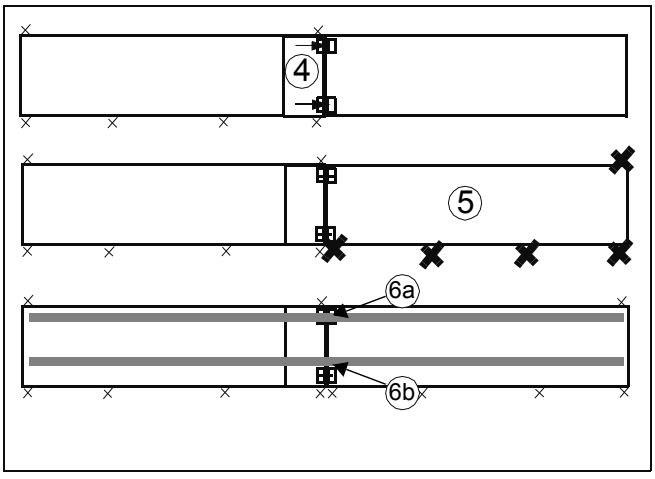

This section contains a brief description of the installation procedure. See the detailed instructions refered to on each step.

(1) The cabinet can be installed with its back against a wall, or back-to-back with another unit. Fasten the unit (or first shipping split) to the floor. See *Fastening the cabinet to the floor and wall (non-marine units)* on page *60*, or *Fastening the unit to the floor and wall (marine units, option +C121)* on page *62*.

Note: A minimum clearance of 400 mm above the basic roof level of the cabinet is required to allow pressure release lids to open at an arc fault.

Note: Leave some space at the side where the cabinet outmost hinges are to allow the doors to open sufficiently (1a). The doors must open 120° to allow supply and inverter module replacement.

Note: Any height adjustment must be done before fastening the units or shipping splits together. Height adjustment can be done by using metal shims between the bottom frame and floor.

(2) Remove the lifting bars. Use the original bolts to block any unused holes. In marine units, use the holes for fastening the cabinet from top.

(3) Slide Axilock connectors onto the liquid pipe ends. One connector per pipe.

(4) If the line-up consists of shipping splits, fasten the first split to the second, see *Joining the shipping splits* on page *63*. Each shipping split includes a joining cubicle where the busbars connect to the next split.

(5) Fasten the second shipping split to the floor.

(6) Join the DC busbars (a) and the PE busbars (b), liquid pipes and the loose wire ends in the joining cubicle, see *Connecting the DC busbars* on page *65* and *Connecting the liquid pipes* on page *64*.

(7) Repeat steps (2) to (6) for the remaining shipping splits.

Fastening the cabinet to the floor and wall (non-marine units)

Fasten the cabinet to the floor by using clamps along the edge of the cabinet bottom, or by bolting the cabinet to the floor through the holes inside.

Alternative 1 – Clamping

Insert the clamps into the twin slots along the front and rear edges of the cabinet frame body and fasten them to the floor with a bolt. The recommended maximum distance between the clamps is 800 mm (31.5”).

If there is not enough working space behind the cabinet for mounting, replace the lifting bars at the top with L-brackets (not included) and fasten the top of the cabinet to the wall.

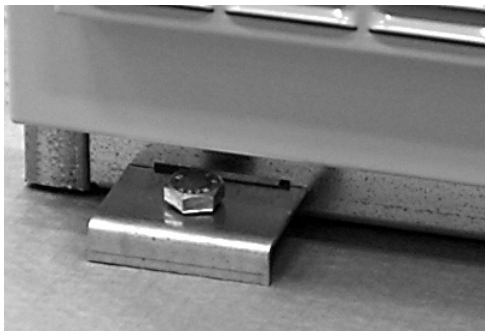

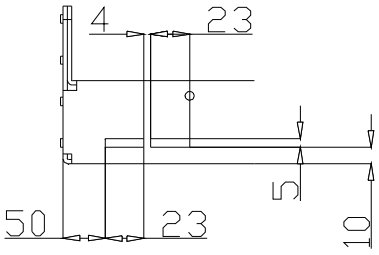

Slot detail, front view (dimensions in millimetres)

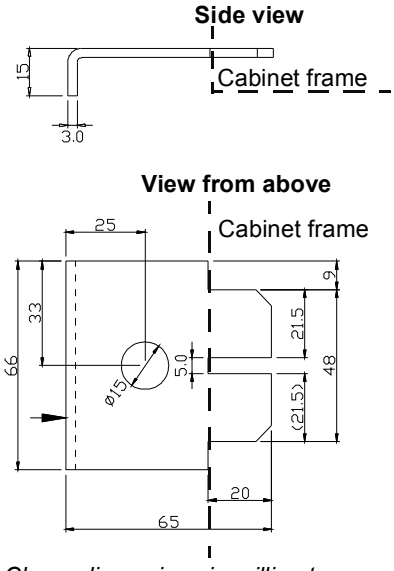

Clamp dimensions in millimetres

Distances between slots

Cubicle Width (mm)	Distance in millimetres and (inches)
300	150 (5.9”)
400	250 (9.85”)
500	350 (13.78”)
600	450 (17.72”)
700	550 (21.65”)
800	650 (25.6”)

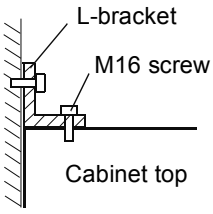

Fastening the cabinet at the top when floor mounting from back is not possible (side view)

Alternative 2 – Using the holes inside the cabinet

The cabinet can be fastened to the floor using the fastening holes inside the cabinet, if they are accessible. The recommended maximum distance between the fastening points is 800 mm (31.5”).

If there is not enough working space behind the cabinet for mounting, replace the lifting lugs at the top with L-brackets (not included) and fasten the top of the cabinet to the wall.

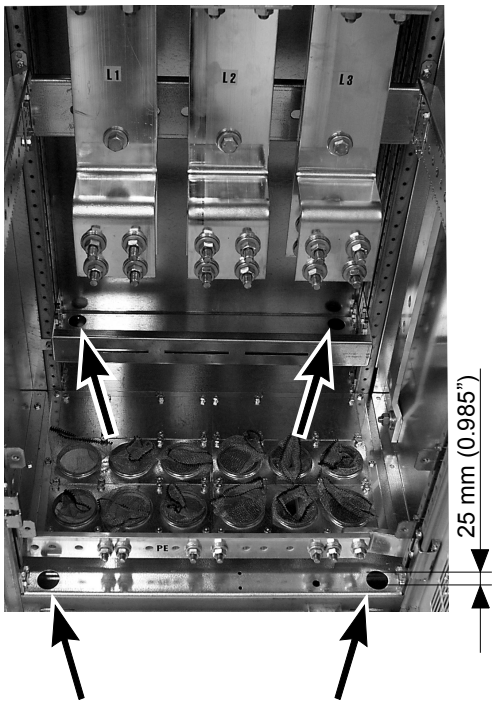

Fastening holes inside the cabinet (arrowed)

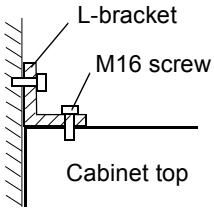

Fastening the cabinet at the top when floor mounting from back is not possible (side view)

Distances between the bottom fastening holes

Bolt size: M10 to M12 (3/8” to 1/2”)

Cubicle Width	Distance between holes Outer Ø31 mm (1.22”)
300	150 mm (5.9”)
400	250 (9.85”)
600	450 (17.7”)
700	550 (21.65”)
800	650 (25.6”)

Fastening the unit to the floor and wall (marine units, option +C121)

1. Bolt the cabinet to the floor through the holes in each flat bar at the base of the cabinet using M10 or M12 screws. **Note**: Welding is not recommended, see page *67*.
2. If there is not enough room behind the cabinet for installation, clamp the rear ends of the flat bars.
3. Remove the lifting bars and fasten the top of the cabinet to the rear wall and/or roof using brackets.

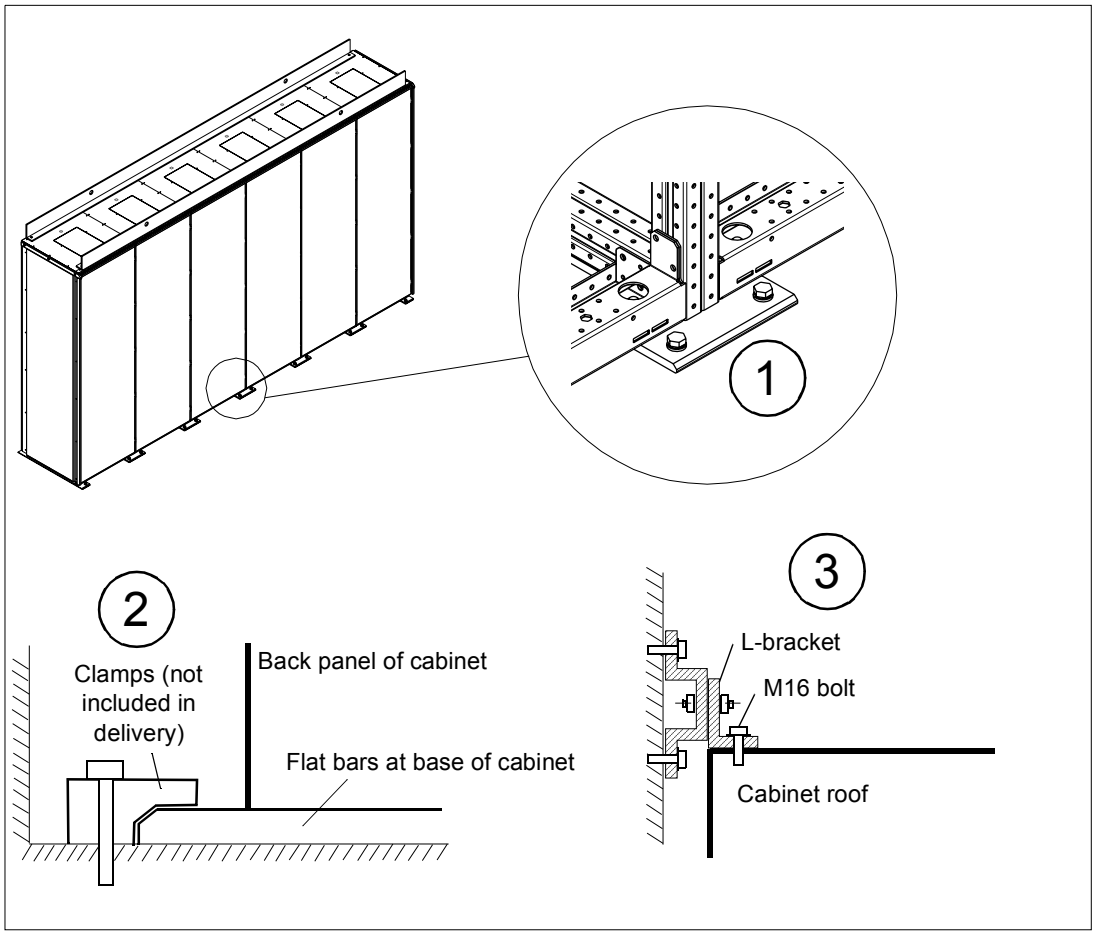

Joining the shipping splits

All necessary materials for connecting the shipping splits together are located in the joining cubicle. Join the shipping splits in the following order.

Preparing the liquid pipe connections

Slide Axilock connectors onto the liquid pipes. **Note**: when the cabinets are pushed together the pipe ends come too close to each other and the connectors cannot be installed any more.

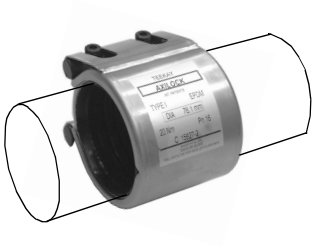

Fastening the cabinets together

Two shipping splits are joined in a joining cubicle. Special M6 screws for fastening the shipping splits together are enclosed in a plastic bag inside the cabinet. The threaded bushings are already mounted on the post.

Fasten the front post and the rear post of the joining section with 7 screws to the posts of the next cubicle.

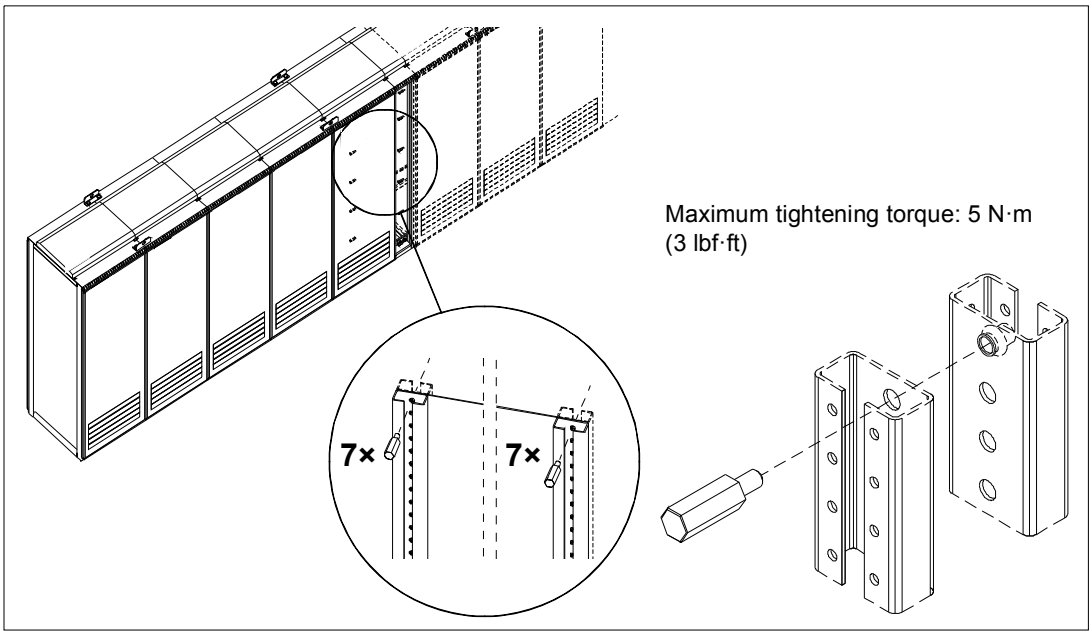

Connecting the liquid pipes

1. Ensure the Axilock connectors are slid on pipe ends. See section *Preparing the liquid pipe connections* on page *63*.
2. Position the liquid pipe ends against each other.
3. Centre the Axilock connector onto the pipe ends.
4. Tighten the connector bolts to a torque shown on the label attached to the connector.

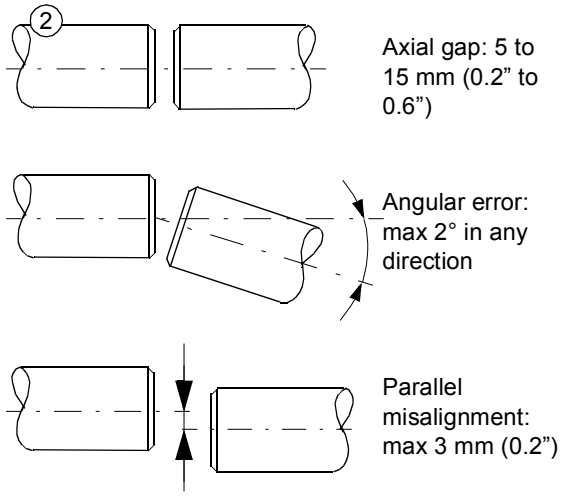

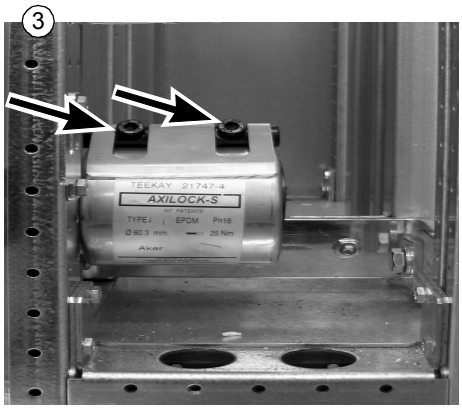

Connecting the PE busbars

Connect the PE busbars as shown below.

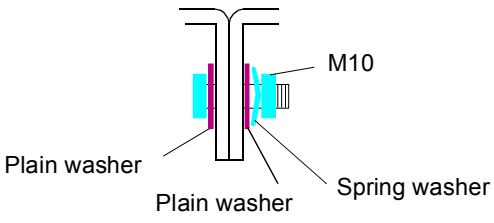

Tightening torque: 35–40 N·m (25–30 lbf·ft)
Strength class: 8.8

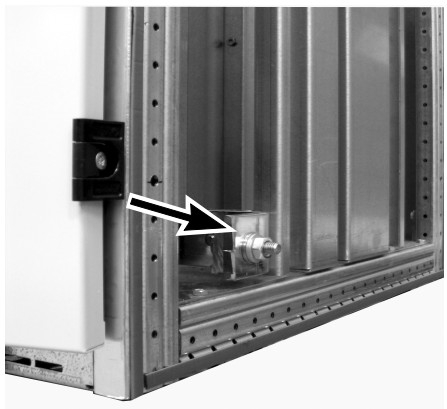

Connecting the DC busbars

Connect the main DC busbars from front as follows:

1. Remove the metal plate covering the busbars in the joining cubicle.
2. Unscrew the bolts of the joint pieces (a).
3. Connect the busbars with the joint pieces (a). Tighten the bolts to 55–70 N·m (40–50 lbf·ft). Bolt strength class: 8.8.
4. Refit the covering plate.

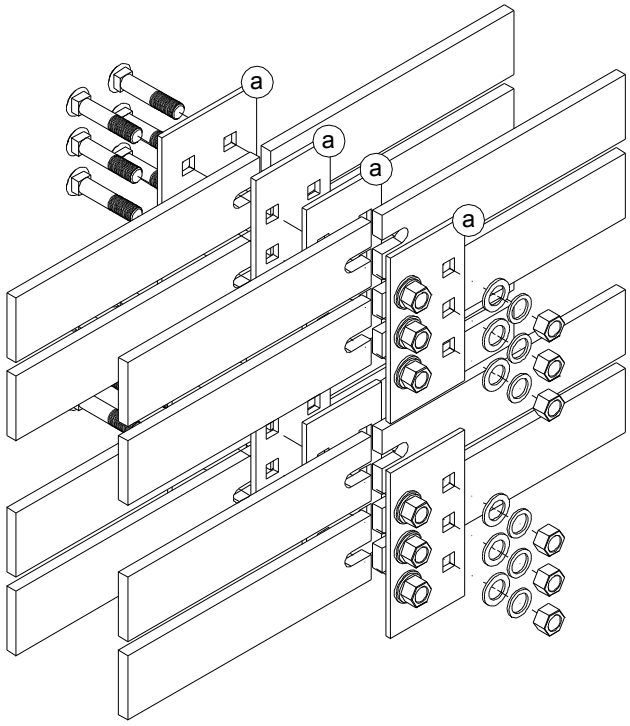

Side views of busbar connection

a) joint piece, b) plain washer with electroplated zinc coating and blue chromate passivation, c) spring washer with mechanically sprayed zinc coating, d) nut

WARNING! Do not place the spring washer against the joint piece. Use the plain washer (with electroplated zinc coating and blue passivation) instead. An unpassivated zinc-coated spring washer positioned directly against the joint piece would cause corrosion.

Miscellaneous

Cable duct in the floor below the cabinet

A cable duct can be constructed below the middle part of the cabinet. The duct width may not exceed 450 mm. The cabinet weight lies on the 100 mm wide section in front and 50 mm wide section at the back which the floor must carry.

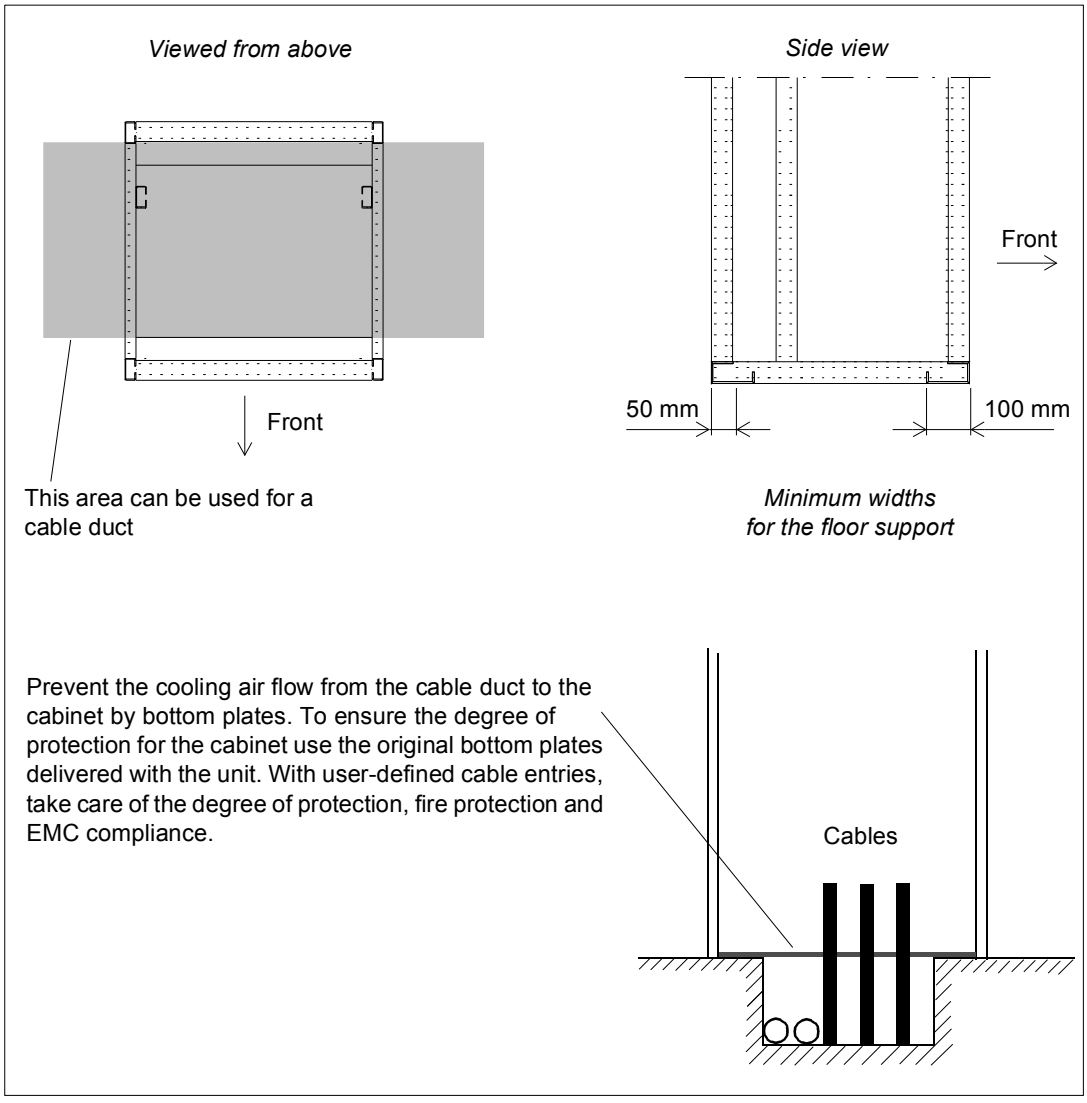

Electric welding

It is not recommended to fasten the cabinet by welding. If the other fastening methods cannot be used, follow the welding instructions below.

Cabinets without flat bars at the base

- Connect the return conductor of the welding equipment to the cabinet frame at the bottom within 0.5 metres of the welding point.

Cabinets with flat bars at the base

- Weld only the flat bar under the cabinet, never the cabinet frame itself.
- Clamp the welding electrode onto the flat bar about to be welded or to the next flat bar within 0.5 metres of the welding point.

WARNING! If the welding return wire is connected improperly, the welding circuit may damage electronic circuits in the cabinet. The thickness of the zinc coating of the cabinet frame is 100 to 200 micrometres; on the flat bars the coating is approximately 20 micrometres. Ensure that the welding fumes are not inhaled.

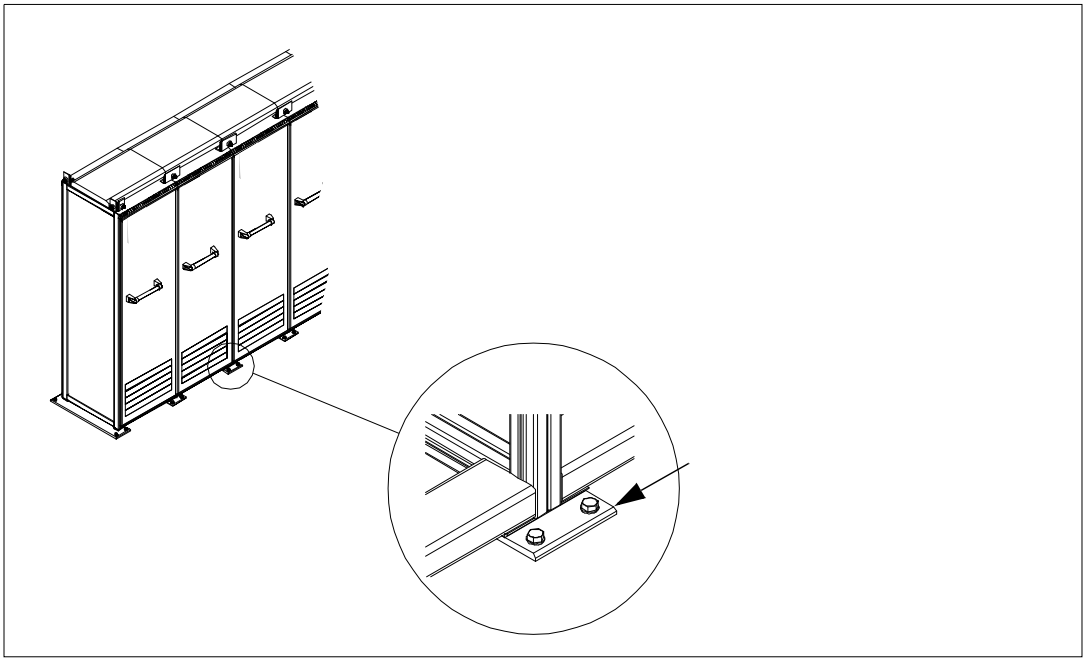

Planning the electrical installation

What this chapter contains

This chapter contains the instructions that you must follow when selecting the motor, the cables, the protections, the cable routing and the way of operation for the drive system.

Note: The installation must always be designed and made according to applicable local laws and regulations. ABB does not assume any liability whatsoever for any installation which breaches the local laws and/or other regulations. Furthermore, if the recommendations given by ABB are not followed, the drive may experience problems that the warranty does not cover.

Selecting the supply disconnecting device (disconnecting means)

The drive is equipped with a main switch disconnector as standard.

Checking the compatibility of the motor and drive

Use an AC induction motor or a permanent magnet synchronous motor with the drive. Several induction motors can be connected at a time but only one permanent magnet motor. Controlling a permanent magnet motor is only allowed using the ACS800 permanent magnet synchronous machine control program or other application programs in scalar control mode.

Select the motor and drive according to the rating tables in chapter *Technical data*. Use the DriveSize PC tool if the default load cycles are not applicable.

1. Check that the motor ratings lie within the allowed ranges of the drive control program:
   - motor nominal voltage is in the range of 1/2 … 2 · U_N
   - motor nominal current is 1/6 ... 2 · I_{2hd} of the drive in DTC control and 0 ... 2 · I_{2hd} in scalar control. The control mode is selected by a drive parameter.

2. Check that the motor voltage rating meets the application requirements:

When	… then the motor voltage rating should be …
DC link voltage is not increased from nominal (through parameter settings)	U_N
DC link voltage is increased from nominal (through parameter settings)	U_{DC} / 1.41
U_N ≙ Rated input voltage of drive U_{DC} ≙ Maximum DC link voltage of drive in V DC. See the parameter setting. For resistor braking, U_{DC} = 1.21 × nominal DC link voltage. **Note:** Nominal DC link voltage is U_N × 1.41 in V DC.	

   See section *When DC link voltage is increased with parameter settings* (page *73*).

3. Consult the motor manufacturer before using a motor in a drive system where the motor nominal voltage differs from the AC power source voltage.
4. Ensure that the motor insulation system withstands the maximum peak voltage in the motor terminals. See section *Requirements for motor insulation and bearings and drive filters* below for the required motor insulation system and drive filtering.

   Example: When the supply voltage is 440 V, the maximum peak voltage in the motor terminals can be approximated as follows: 440 V × 1.41 × 2 = 1241 V. Check that the motor insulation system withstands this voltage.

Protecting the motor insulation and bearings

The drive employs modern IGBT inverter technology. Regardless of frequency, the drive output comprises pulses of approximately the drive DC bus voltage with a very short rise time. The pulse voltage can almost double at the motor terminals, depending on the attenuation and reflection properties of the motor cable and the terminals. This can cause additional stress on the motor and motor cable insulation.

Modern variable speed drives with their fast rising voltage pulses and high switching frequencies can generate current pulses that flow through the motor bearings, which can gradually erode the bearing races and rolling elements.

Optional du/dt filters protect motor insulation system and reduce bearing currents. Common mode filters mainly reduce bearing currents.

To avoid damage to motor bearings:

- select and install the cables according to the instructions given in the hardware manual
- use insulated N-end (non-drive end) bearings and output filters from ABB according to section *Requirements for motor insulation and bearings and drive filters* below.

Requirements for motor insulation and bearings and drive filters

The following table shows how to select the motor insulation system and when an optional ABB du/dt filter, insulated N-end (non-drive end) motor bearings and ABB common mode filters are required. The motor manufacturer should be consulted regarding the construction of the motor insulation and additional requirements for explosion-safe (EX) motors. Failure of the motor to fulfil the following requirements or improper installation may shorten motor life or damage the motor bearings and voids the warranty.

Manufacturer	Motor type	Nominal AC line voltage	Requirement for			
			Motor insulation system	ABB du/dt filter, insulated N-end bearing and ABB common mode filter		
				P_N < 100 kW and frame size < IEC 315	**100 kW ≤ P_N < 350 kW** or frame size ≥ IEC 315	**P_N ≥ 350 kW** or frame size ≥ IEC 400
				P_N < 134 hp and frame size < NEMA 500	**134 hp ≤ P_N < 469 hp** or frame size ≥ NEMA 500	**P_N ≥ 469 hp** or frame size > NEMA 580
ABB	Random-wound M2_ M3_ and M4_	U_N ≤ 500 V	Standard	-	+ N	+ N + CMF
		500 V < U_N ≤ 600 V	Standard	+ du/dt	+ du/dt + N	+ du/dt + N + CMF
			or			
			Reinforced	-	+ N	+ N + CMF
		600 V < U_N ≤ 690 V (cable length ≤ 150 m)	Reinforced	+ du/dt	+ du/dt + N	+ du/dt + N + CMF
		600 V < U_N ≤ 690 V (cable length > 150 m)	Reinforced	-	+ N	+ N + CMF
	Form-wound HX_ and AM_	380 V < U_N ≤ 690 V	Standard	n.a.	+ N + CMF	P_N < 500 kW: + N + CMF
						P_N ≥ 500 kW: + N + CMF + du/dt
	Old* form-wound HX_ and modular	380 V < U_N ≤ 690 V	Check with the motor manufacturer.	+ du/dt with voltages over 500 V + N + CMF		
	Random-wound HX_ and AM_ **	0 V < U_N ≤ 500 V	Enamelled wire with fiber glass taping	+ N + CMF		
		500 V < U_N ≤ 690 V		+ du/dt + N + CMF		

Manufacturer	Motor type	Nominal AC line voltage	Requirement for			
			Motor insulation system	ABB du/dt filter, insulated N-end bearing and ABB common mode filter		
				P_N < 100 kW and frame size < IEC 315	**100 kW ≤ P_N < 350 kW** or frame size ≥ IEC 315	**P_N ≥ 350 kW** or frame size ≥ IEC 400
				P_N < 134 hp and frame size < NEMA 500	**134 hp ≤ P_N < 469 hp** or frame size ≥ NEMA 500	**P_N ≥ 469 hp** or frame size > NEMA 580
NON-ABB	Random-wound and form-wound	U_N ≤ 420 V	Standard: $\hat{U}_{LL}$ = 1300 V	-	+ N or CMF	+ N + CMF
		420 V < U_N ≤ 500 V	Standard: $\hat{U}_{LL}$ = 1300 V	+ du/dt	+ du/dt + N or + du/dt + CMF	+ du/dt + N + CMF
			or			
			Reinforced: $\hat{U}_{LL}$ = 1600 V, 0.2 microsecond rise time	-	+ N or CMF	+ N + CMF
		500 V < U_N ≤ 600 V	Reinforced: $\hat{U}_{LL}$ = 1600 V	+ du/dt	+ du/dt + N or + du/dt + CMF	+ du/dt + N + CMF
			or			
			Reinforced: $\hat{U}_{LL}$ = 1800 V	-	+ N or CMF	+ N + CMF
		600 V < U_N ≤ 690 V	Reinforced: $\hat{U}_{LL}$ = 1800 V	+ du/dt	+ du/dt + N	+ du/dt + N + CMF
			Reinforced: $\hat{U}_{LL}$ = 2000 V, 0.3 microsecond rise time ***	-	N + CMF	N + CMF

* manufactured before 1.1.1998

** For motors manufactured before 1.1.1998, check for additional instructions with the motor manufacturer.

*** If the intermediate DC circuit voltage of the drive is increased from the nominal level, check with the motor manufacturer if additional output filters are needed in the applied drive operation range.

Note 1: The abbreviations used in the table are defined below.

Abbreviation	Definition
U_N	Nominal voltage of the supply network
$\hat{U}_{LL}$	Peak line-to-line voltage at motor terminals which the motor insulation must withstand
P_N	Motor nominal power
du/dt	du/dt filter at the output of the drive +E205
CMF	Common mode filter +E208
N	N-end bearing: insulated motor non-drive end bearing
n.a.	Motors of this power range are not available as standard units. Consult the motor manufacturer.

Explosion-safe (EX) motors

Consult the motor manufacturer regarding the construction of the motor insulation and additional requirements for explosion-safe (EX) motors.

High-output motors and IP 23 motors

For motors with higher rated output than what is stated for the particular frame size in EN 50347 (2001) and for IP23 motors, the requirements of ABB random-wound motor series (for example M3AA, M3AP, M3BP) are given below. For non-ABB motor types, see the basic table above and apply the requirements of range **100 kW < P_N < 350 kW** to motors with P_N < 100 kW. Apply the requirements of range **$P_N \geq$ 350 kW** to motors within the range **100 kW < P_N < 350 kW**. In other cases, consult the motor manufacturer.

Manufacturer	Motor type	Nominal mains voltage (AC line voltage)	Requirement for			
			Motor insulation system	ABB du/dt filter, insulated N-end bearing and ABB common mode filter		
				P_N < 100 kW	**100 kW ≤ P_N < 200 kW**	**$P_N \geq$ 200 kW**
				P_N < 140 hp	**140 hp ≤ P_N < 268 hp**	**$P_N \geq$ 268 hp**
A B B	Random-wound	$U_N \leq$ 500 V	Standard	-	+ N	+ N + CMF
		500 V < $U_N \leq$ 600 V	Standard	+ du/dt	+ du/dt + N	+ du/dt + N + CMF
			or			
			Reinforced	-	+ N	+ N + CMF
		600 V < $U_N \leq$ 690 V	Reinforced	+ du/dt	+ du/dt + N	+ du/dt + N + CMF

HXR and AMA motors

All AMA machines (manufactured in Helsinki) for drive systems have form-wound windings. All HXR machines manufactured in Helsinki starting 1.1.1998 have form-wound windings.

*ABB motors of types other than M2_, M3_, HX_ and AM_*

Use the selection criteria given for non-ABB motors.

Resistor braking of the drive

When the drive is in braking mode for a large part of its operation time, the intermediate circuit DC voltage of the drive increases, the effect being similar to increasing the supply voltage by up to 20 percent. The voltage increase should be taken into consideration when determining the motor insulation requirement.

Example: Motor insulation requirement for a 400 V application must be selected as if the drive were supplied with 480 V.

When DC link voltage is increased with parameter settings

If the intermediate circuit DC voltage is increased with the IGBT supply control program parameter settings, select the motor insulation system according to the increased DC voltage level, especially in the 500 V supply voltage range.

Calculating the rise time and the peak line-to-line voltage

The peak line-to-line voltage at the motor terminals generated by the drive as well as the voltage rise time depend on the cable length. The requirements for the motor insulation system given in the table are “worst case” requirements covering installations with 30 metre and longer cables. The rise time can be calculated as follows: $\triangle t = 0.8 \cdot \hat{U}_{LL}/(du/dt)$. Read $\hat{U}_{LL}$ and du/dt from the diagrams below. Multiply the values of the graph by the supply voltage (U_N). In case of drives with resistor braking, the $\hat{U}_{LL}$ and du/dt values are approximately 20% higher.

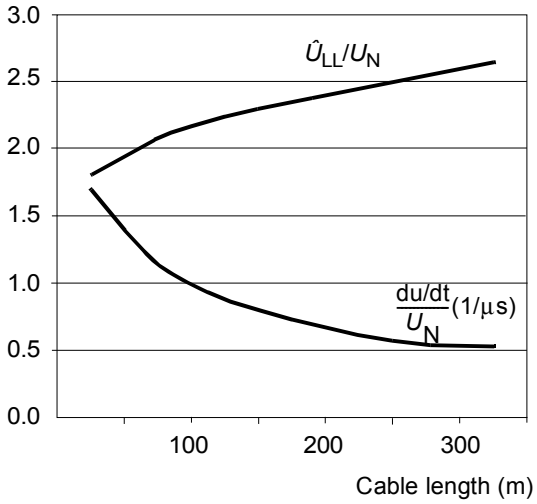

With du/dt Filter

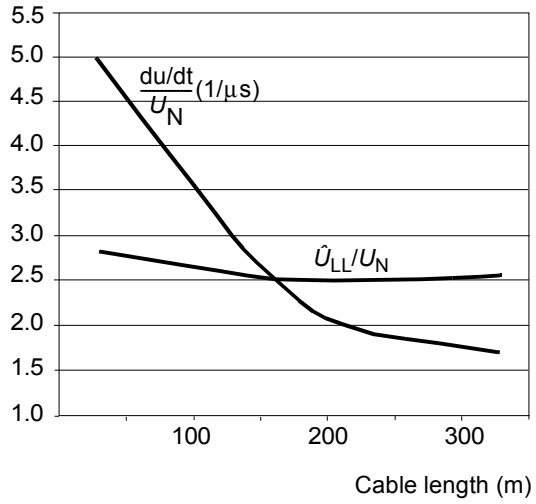

Without du/dt Filter

Sine filters

Sine filters protect the motor insulation system. Therefore, a du/dt filter can be replaced with a sine filter. The peak phase-to-phase voltage with a sine filter is approximately 1.5 × U_N.

Selecting the power cables

General rules

Dimension the input power and motor cables **according to local regulations**:

- Dimension the cable to carry the drive load current. See chapter *Technical data* for the rated currents.
- Select a cable rated for at least 70 °C maximum permissible temperature of conductor in continuous use. For US, see *Additional US requirements,* page *79*.
- The inductance and impedance of the PE conductor/cable (grounding wire) must be rated according to permissible touch voltage appearing under fault conditions (so that the fault point voltage will not rise excessively when a ground fault occurs).
- 600 V AC cable is accepted for up to 500 V AC. For 690 V AC rated equipment, the rated voltage between the conductors of the cable should be minimum 1 kV.

Use symmetrical shielded motor cable, see page *78*. Ground the shield(s) of motor cable(s) 360° at both ends.

Note: When continuous metal conduit is employed, shielded cable is not required. The conduit must have bonding at both ends as with cable shield.

A four-conductor system is allowed for input cabling, but shielded symmetrical cable is recommended.

To operate as a protective conductor, the shield conductivity requirements according to IEC 60439-1 are shown below when the protective conductor is made of the same metal as the phase conductors. The table applies also to four-conductor systems.

Cross-sectional area of the phase conductors S (mm^2)	**Minimum cross-sectional area of the corresponding protective conductor S_p (mm^2)**
$S \leq 16$	S
$16 < S \leq 35$	16
$35 < S \leq 400$	S/2
$400 < S \leq 800$	200
$800 < S$	S/4

Compared to a four-conductor system, the use of symmetrical shielded cable reduces electromagnetic emission of the whole drive system as well as motor bearing currents and wear.

Note: The cabinet configuration of the drive may require multiple supply and/or motor cabling. Refer to the connection diagrams in chapter *Electrical installation*.

Keep the motor cable and its PE pigtail (twisted screen) as short as possible in order to reduce high-frequency electromagnetic emissions.

Typical power cable sizes

Tables below give current carrying capacity (I_{Lmax}) for aluminium and copper PVC/ XLPE insulated cables. A correction factor K = 0.70 is used (cables laid on the cable trays side by side, max 9 cables per tray, three ladder type trays one on top of the other, ambient temperature 30°C, EN 60204-1 and IEC 364-5-52).

Aluminium cable		**PVC insulation** Conductor temperature 70°		**XLPE insulation** Conductor temperature 90°	
Size	ø [mm]	I_{Lmax} [A]	Time const. [s]	I_{Lmax} [A]	Time const. [s]
3 × 35 + 10 Cu	26	69	677	86	677
3 × 50 + 15 Cu	29	83	912	104	912
3 × 70 + 21 Cu	32	107	1110	134	1110
3 × 95 + 29 Cu	38	130	1412	163	1412
3 × 120 + 41 Cu	41	151	1665	189	1665
3 × 150 + 41 Cu	44	174	1920	218	1920
3 × 185 + 57 Cu	49	199	2257	249	2257
3 × 240 + 72 Cu	54	235	2683	294	2683
2 × (3 × 70 + 21 Cu)	2 × 32	214	1110	268	1110
2 × (3 × 95 + 29 Cu)	2 × 38	260	1412	325	1412
2 × (3 × 120 + 41 Cu)	2 × 41	302	1665	378	1665
2 × (3 × 150 + 41 Cu)	2 × 44	348	1920	435	1920
2 × (3 × 185 + 57 Cu)	2 × 49	398	2257	498	2257
2 × (3 × 240 + 72 Cu)	2 × 54	470	2683	588	2683
3 × (3 × 150 + 41 Cu)	3 × 44	522	1920	652	1920
3 × (3 × 185 + 57 Cu)	3 × 49	597	2257	746	2257
3 × (3 × 240 + 72 Cu)	3 × 54	705	2683	881	2683
4 × (3 × 185 + 57 Cu)	4 × 49	796	2257	995	2257
4 × (3 × 240 + 72 Cu)	4 × 54	940	2683	1175	2683
5 × (3 × 185 + 57 Cu)	5 × 49	995	2257	1244	2257
5 × (3 × 240 + 72 Cu)	5 × 54	1175	2683	1469	2683
6 × (3 × 240 + 72 Cu)	6 × 54	1410	2683	1763	2683
7 × (3 × 240 + 72 Cu)	7 × 54	1645	2683	2058	2683
8 × (3 × 240 + 72 Cu)	8 × 54	1880	2683	2350	2683
9 × (3 × 240 + 72 Cu)	9 × 54	2115	2683	2644	2683
10 × (3 × 240 + 72 Cu)	10 × 54	2350	2683	2938	2683

Copper cable		**PVC insulation** Conductor temperature 70°		**XLPE insulation** Conductor temperature 90°	
Size	ø [mm]	I_{Lmax} [A]	Time const. [s]	I_{Lmax} [A]	Time const. [s]
3 × 1.5 + 1.5	13	13	85	16	85
3 × 2.5 + 2.5	14	18	123	23	123
(3 × 4 + 4)	16	24	177	30	177
3 × 6 + 6	18	30	255	38	255
3 × 10 + 10	21	42	354	53	354
3 × 16 + 16	23	56	505	70	505
3 × 25 + 16	24	71	773	89	773
3 × 35 + 16	26	88	970	110	970
3 × 50 + 25	29	107	1268	134	1268
3 × 70 + 35	32	137	1554	171	1554
3 × 95 + 50	38	167	1954	209	1954
3 × 120 + 70	41	193	2313	241	2313
3 × 150 + 70	44	223	2724	279	2724
3 × 185 + 95	50	255	3186	319	3186
3 × 240 + 120	55	301	3904	376	3904
2 × (3 × 70 + 35)	2 × 32	274	1554	343	1554
2 × (3 × 95 + 50)	2 × 38	334	1954	418	1954
2 × (3 × 120 + 70)	2 × 41	386	2313	483	2313
2 × (3 × 150 + 70)	2 × 44	446	2724	558	2724
2 × (3 × 185 + 95)	2 × 50	510	3186	638	3186
2 × (3 × 240 + 120)	2 × 55	602	3904	753	3904
3 × (3 × 120 + 70)	3 × 41	579	2313	724	2313
3 × (3 × 150 + 70)	3 × 44	669	2724	836	2724
3 × (3 × 185 + 95)	3 × 50	765	3186	956	3186
3 × (3 × 240 + 120)	3 × 55	903	3904	1129	3904
4 × (3 × 150 + 70)	4 × 44	892	2724	1115	2724
4 × (3 × 185 + 95)	4 × 50	1020	3186	1275	3186
4 × (3 × 240 + 120)	4 × 55	1204	3904	1505	3904
5 × (3 × 185 + 95)	5 × 50	1275	3186	1594	3186
5 × (3 × 240 + 120)	5 × 55	1505	3904	1881	3904
6 × (3 × 185 + 95)	6 × 50	1530	3186	1913	3186
6 × (3 × 240 + 120)	6 × 55	1806	3904	2258	3904
7 × (3 × 240 + 120)	7 × 55	2107	3904	2634	3904
8 × (3 × 240 + 120)	8 × 55	2408	3904	3010	3904

Alternative power cable types

Power cable types that can be used with the drive are represented below.

Recommended: Symmetrical shielded cable: three phase conductors and a concentric or otherwise symmetrically constructed PE conductor, and a shield

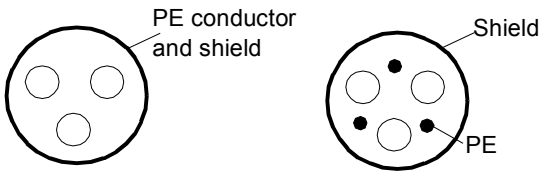

A separate PE conductor is required if the conductivity of the cable shield is < 50 % of the conductivity of the phase conductor.

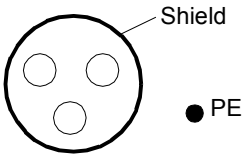

Not allowed: Symmetrical cable with individual shields for each phase conductor

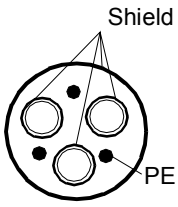

Not allowed for motor cabling: A four-conductor system: three phase conductors and a protective conductor.

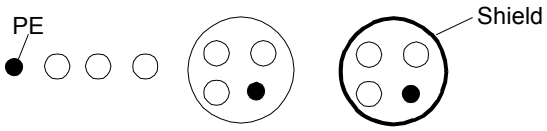

Motor cable shield

To effectively suppress radiated and conducted radio-frequency emissions, the shield conductivity must be at least 1/10 of the phase conductor conductivity. The requirements are easily met with a copper or aluminium shield. The minimum requirement of the motor cable shield of the drive is shown below. It consists of a concentric layer of copper wires with an open helix of copper tape. The better and tighter the shield, the lower the emission level and the bearing currents.

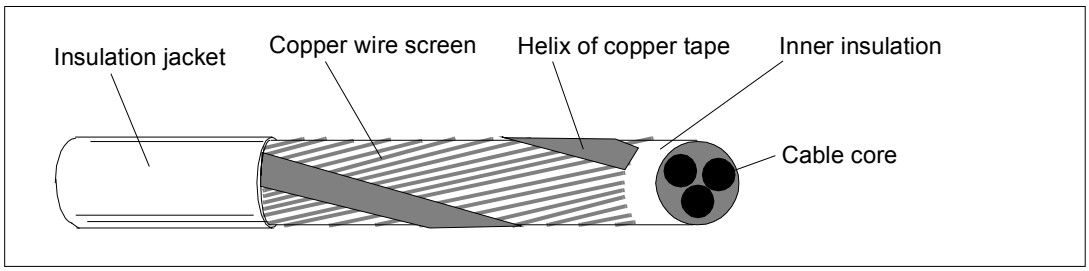

Additional US requirements

Type MC continuous corrugated aluminum armor cable with symmetrical grounds or shielded power cable must be used for the motor cables if metallic conduit is not used. For the North American market, 600 V AC cable is accepted for up to 500 V AC. 1000 V AC cable is required above 500 V AC (below 600 V AC). For drives rated over 100 amperes, the power cables must be rated for 75 °C (167 °F).

Conduit

Where conduits must be coupled together, bridge the joint with a ground conductor bonded to the conduit on each side of the joint. Bond the conduits also to the drive enclosure. Use separate conduits for input power, motor, brake resistors, and control wiring. When conduit is employed, type MC continuous corrugated aluminum armor cable or shielded cable is not required. A dedicated ground cable is always required.

Note: Do not run motor wiring from more than one drive in the same conduit.

Armored cable / shielded power cable

6-conductor (3 phases and 3 ground) type MC continuous corrugated aluminum armor cable with symmetrical grounds is available from the following suppliers (trade names in parentheses):

- Anixter Wire & Cable (Philsheath)
- BICC General Corp (Philsheath)
- Rockbestos Co. (Gardex)
- Oaknite (CLX).

Shielded power cables are available from Belden, LAPPKABEL (ÖLFLEX) and Pirelli, among others.

Selecting the control cables

General rules

All control cables must be shielded.

Use a double-shielded twisted pair cable (see figure a) for analogue signals. This type of cable is recommended for the pulse encoder signals also. Employ one individually shielded pair for each signal. Do not use common return for different analogue signals.

A double-shielded cable is the best alternative for low-voltage digital signals but single-shielded twisted multipair cable (figure b) is also usable.

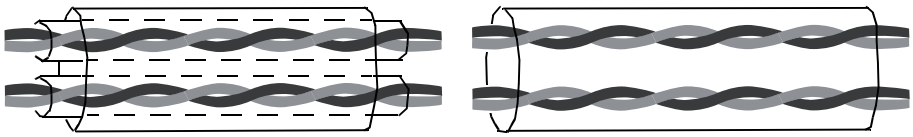

a
Double-shielded twisted pair cable

b
Single-shielded twisted multipair cable

Run analogue and digital signals in separate, shielded cables.

Relay-controlled signals, providing their voltage does not exceed 48 V, can be run in the same cables as digital input signals. It is recommended that the relay-controlled signals be run as twisted pairs.

Never mix 24 V DC and 115 / 230 V AC signals in the same cable.

Relay cable

The cable type with braided metallic screen (e.g. ÖLFLEX LAPPKABEL, Germany) has been tested and approved by ABB.

Control panel cable

In remote use, the cable connecting the control panel to the drive must not exceed 3 metres (10 ft). The cable type tested and approved by ABB is used in control panel option kits.

Coaxial cable (for use with Advant Controllers AC 80/AC 800)

- 75 ohm
- RG59, diameter 7 mm or RG11, diameter 11 mm
- Maximum cable length: 300 m (1000 ft)

Routing the cables

Route the motor cable away from other cable routes. Motor cables of several drives can be run in parallel installed next to each other. It is recommended that the motor cable, input power cable and control cables be installed on separate trays. Avoid long parallel runs of motor cables with other cables in order to decrease electromagnetic interference caused by the rapid changes in the drive output voltage.

Where control cables must cross power cables make sure they are arranged at an angle as near to 90 degrees as possible. Do not run extra cables through the drive.

The cable trays must have good electrical bonding to each other and to the grounding electrodes. Aluminium tray systems can be used to improve local equalizing of potential.

A diagram of the cable routing is below.

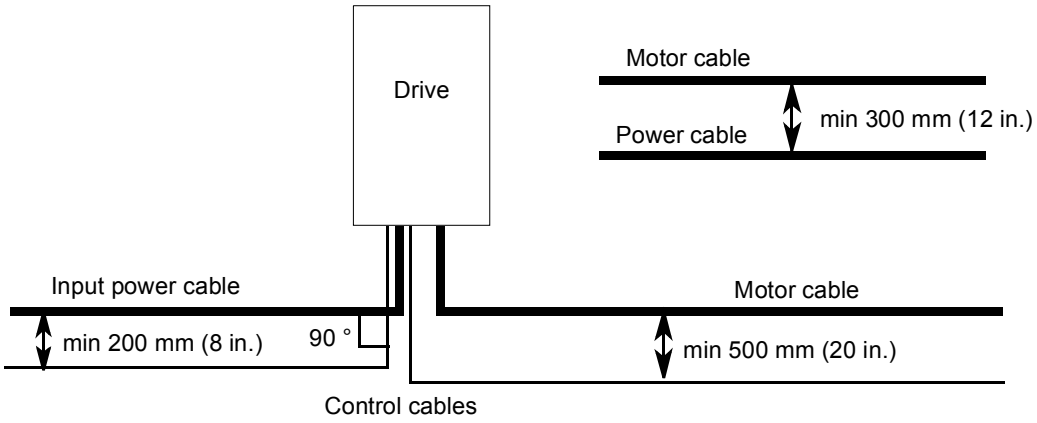

Separate control cable ducts

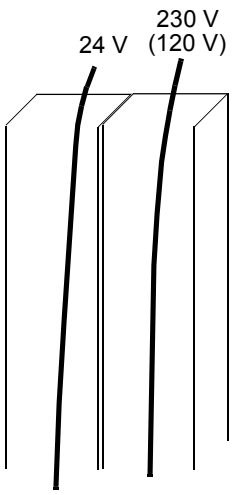

Lead 24 V and 230 V (120 V) control cables in separate ducts inside the cabinet.

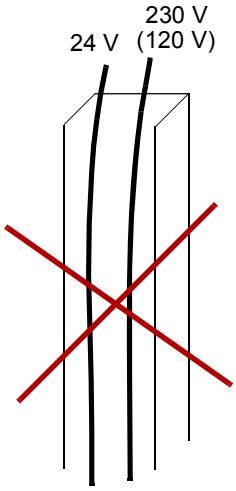

Not allowed unless the 24 V cable is insulated for 230 V (120 V) or insulated with an insulation sleeving for 230 V (120 V).

Protecting the drive, input power cable, motor and motor cable in short circuit situation and against thermal overload

Protecting the drive and input power cable in short-circuit situations

Always protect the input cable with fuses. In networks with a short-circuit withstand of 65 kA or less, standard gG fuses can be used. No fuses need be installed at the drive input.

If the drive is supplied through busbars, fuses must be installed at the drive input. In networks with a short-circuit withstand of less than 50 kA, standard gG fuses are sufficient. If the network has a short-circuit withstand of 50…65 kA, aR fuses are required.

Size the fuses according to local safety regulations, appropriate input voltage and the rated current of the drive. **Check that the operating time of the fuses is below 0.5 seconds.** For fuse ratings, see chapter *Technical data*.



WARNING! Circuit breakers are not capable of providing sufficient protection because they are inherently slower than fuses. Always use fuses with circuit breakers.

Protecting the motor and motor cable in short-circuit situations

The drive protects the motor cable and the motor in a short-circuit situation when the motor cable is dimensioned according to the nominal current of the drive. No additional protection devices are needed.

Protecting the drive, motor cable and input power cable against thermal overload

The drive protects itself and the input and motor cables against thermal overload when the cables are dimensioned according to the nominal current of the drive. No additional thermal protection devices are needed.



WARNING! If the drive is connected to multiple motors, a separate thermal overload switch or a circuit breaker must be used for protecting each cable and motor. These devices may require a separate fuse to cut off the short-circuit current.

Protecting the motor against thermal overload

According to regulations, the motor must be protected against thermal overload and the current must be switched off when overload is detected. The drive includes a motor thermal protection function that protects the motor and switches off the current when necessary. Depending on a drive parameter value, the function either monitors a calculated temperature value (based on a motor thermal model) or an actual temperature indication given by motor temperature sensors. The user can tune the thermal model further by feeding in additional motor and load data.

The most common temperature sensors are:

- motor sizes IEC180…225: thermal switch eg, Klixon
- motor sizes IEC200…250 and larger: PTC or Pt100.

See the firmware manual for more information on the motor thermal protection, and the connection and use of the temperature sensors.

Insulation requirements for the motor temperature sensor circuit



WARNING! IEC 60664 requires double or reinforced insulation between live parts and the surface of accessible parts of electrical equipment which are either non-conductive or conductive but not connected to the protective earth.

To fulfil this requirement, the connection of a thermistor (and other similar components) to the digital inputs of the drive can be implemented in three alternate ways:

1. There is double or reinforced insulation between the thermistor and live parts of the motor.
2. Circuits connected to all digital and analogue inputs of the drive are protected against contact and insulated with basic insulation (the same voltage level as the drive main circuit) from other low voltage circuits.
3. An external thermistor relay is used. The insulation of the relay must be rated for the same voltage level as the main circuit of the drive. For connection, see the firmware manual.

Protecting the drive against ground faults in the drive, motor or motor cable

Both the supply unit and the inverter unit are equipped with an internal ground fault protective function to protect the drive against ground faults in the drive, motor and motor cable. (This is not a personnel safety or a fire protection feature.) Both ground fault protective functions can be disabled; refer to the I*GBT Supply Control Program Firmware Manual* (3AFE68315735 [English]) and the firmware manual of the drive control program respectively.

Note: The EMC filter (if present) includes capacitors connected between the main circuit and the frame. These capacitors and long motor cables increase the ground leakage current and may cause fault current circuit breakers to function.

Implementing the emergency stop function

The drive can be equipped with category 0 and 1 emergency stop options (+Q951, +Q952, +Q963 and +Q964). Install the emergency stop devices at each operator control station and at other operating stations where emergency stop may be needed. Pressing the stop key () on the control panel of the drive, or turning the operating switch of the drive from position “1” to “0” does not generate an emergency stop of the motor or separate the drive from dangerous potential.

For more information, see *Wiring, start-up and operation instructions of safety options (+Q950, +Q951, +Q952, +Q963, +Q964, +Q967 and +Q968) for ACS800 cabinet-installed drives* (3AUA0000026238 [English]).

Implementing the Prevention of unexpected start function

The drive equipped with option +Q950 supports the Prevention of unexpected start function according to standards IEC/EN 60204-1:1997; ISO/DIS 14118:1996 and EN 1037:1996. The circuit conforms to EN 954-1, Category 3.

The Prevention of unexpected start function disables the control voltage of the power semiconductors of the drive output stage, thus preventing the motor-side converter from generating the voltage required to rotate the motor. By using this function, short-time operations (like cleaning) and/or maintenance work on non-electrical parts of the machinery can be performed without switching off the power supply to the drive.

The operator activates the prevention of unexpected start function using a switch mounted on a control desk. When the function is activated, the switch is opened, and an indicator lamp will light.



WARNING! The prevention of unexpected start function does not disconnect the voltage of the main and auxiliary circuits from the drive. Therefore maintenance work on electrical parts of the drive can only be carried out after isolating the drive system from the main supply.

Note: If a running drive is stopped by using the Prevention of unexpected start function, the drive will cut off the motor supply voltage and the motor will coast to stop.

For more information, see *Wiring, start-up and operation instructions of safety options (+Q950, +Q951, +Q952, +Q963, +Q964, +Q967 and +Q968) for ACS800 cabinet-installed drives* (3AUA0000026238 [English]).

Implementing the Safe torque off function

Safe torque off with safety relay option (+Q968) is available for the drive. It provides Safe torque off (STO) function according to standards EN 61800-5-2:2007; EN ISO 13849-1:2008, IEC 61508 and EN 62061:2005. The function also corresponds to an uncontrolled stop in accordance with stop category 0 of EN 60204-1 and prevention of unexpected start-up of EN 1037.

The Safe torque off function disables the control voltage of the power semiconductors of the drive output stage, thus preventing the inverter from generating the voltage required to rotate the motor (see diagram below). By using this function, short-time operations (like cleaning) and/or maintenance work on non-electrical parts of the machinery can be performed without switching off the power supply to the drive.



WARNING! The Safe torque off function does not disconnect the voltage of the main and auxiliary circuits from the drive. Therefore maintenance work on electrical parts of the drive or the motor can only be carried out after isolating the drive system from the main supply.

Note: It is not recommended to stop the drive by using the Safe torque off function. If a running drive is stopped by using the Safe torque off function, the drive will stop by coasting. If this causes danger or is not acceptable, the drive and machinery must be stopped using the appropriate stopping mode before using the Safe torque off function.

Note concerning permanent magnet motor drives in case of a multiple IGBT power semiconductor failure: In spite of the activation of the Safe torque off function, the drive system can produce an alignment torque which maximally rotates the motor shaft by 180/*p* degrees. *p* denotes the pole pair number.

For more information, see *Wiring, start-up and operation instructions of safety options (+Q950, +Q951, +Q952, +Q963, +Q964, +Q967 and +Q968) for ACS800 cabinet-installed drives* (3AUA0000026238 [English]).

Implementing the power-loss ride-through function

The power loss ride-through is not available as an standard option (on the price list). However, the supply unit control program supports the function, and it can be implemented in most cases if ordered separately as an engineered option for the delivery.

Supplying power for the auxiliary circuits

Drives of frame sizes R7i+R7i and R8i+R8i are equipped with an auxiliary control voltage transformer which supplies 230 V AC voltage to cooling fans and control circuits. With option +G304 the supplied voltage is 115 V AC.

Drives of frame sizes 2×R8i+2×R8i and up can be equipped with an optional auxiliary control voltage transformer which supplies 230 V AC voltage to cooling fans and control circuits. With option +G304 the supplied voltage is 115 V AC.

The drive can be equipped with terminals for uninterruptible power supply (option +G307). The circuit ensures voltage for control circuit relays and RMIO boards. The cooling fans are not supplied.

Terminals for connecting external control voltage (option +G307)

- See section *Connecting external power supply for the auxiliary circuits* on page *102* for the connection.
- Calculate load using data given in section *Auxiliary circuit current consumption* on page *171*. Consider only “non-fan” load.

Units without optional auxiliary control transformer and without terminals for connecting external control voltage (option +G307)

- See section *Connecting external power supply for the auxiliary circuits* on page *102* for the connection.
- Calculate load using data given in section *Auxiliary circuit current consumption* on page *171*.

Using power factor compensation capacitors with the drive

Power factor compensation is not needed with AC drives. However, if a drive is to be connected in a system with compensation capacitors installed, note the following restrictions.



WARNING! Do not connect power factor compensation capacitors to the motor cables (between the drive and the motor). They are not intended for use with AC drives and can cause permanent damage to the drive or themselves.

If there are power factor compensation capacitors in parallel with the 3-phase input of the drive:

1. Do not connect a high-power capacitor to the power line while the drive is connected. The connection will cause voltage transients that may trip or even damage the drive.
2. If capacitor load is increased/decreased step by step when the AC drive is connected to the power line, ensure that the connection steps are low enough not to cause voltage transients that would trip the drive.
3. Check that the power factor compensation unit is suitable for use in systems with AC drives i.e. harmonic generating loads. In such systems, the compensation unit should typically be equipped with a blocking reactor or harmonic filter.

Implementing a safety switch between the drive and motor

It is recommended to install a safety switch between the permanent magnet synchronous motor and the drive output. The switch is needed to isolate the motor during any maintenance work on the drive.

Using a contactor between the drive and motor

Implementing the control of an output contactor depends on how you select the drive to operate. See also section *Implementing a bypass connection* on page *89*.

When you have selected to use

- DTC or vector motor control mode, and motor ramp stop,

open the contactor as follows:

1. Give a stop command to the drive.
2. Wait until the drive decelerates the motor to zero speed.
3. Open the contactor.

When you have selected to use

- DTC or vector motor control mode, and motor coast stop, or
- scalar control mode,

open the contactor as follows:

1. Give a stop command to the drive.
2. Open the contactor.



WARNING! When the DTC or vector motor control mode is in use, never open the output contactor while the drive controls the motor. The DTC and vector motor control operate extremely fast, much faster than it takes for the contactor to open its contacts. When the contactor starts opening while the drive controls the motor, the DTC or vector control will try to maintain the load current by immediately increasing the drive output voltage to the maximum. This will damage, or even burn the contactor completely.

Implementing a bypass connection

If bypassing is required, employ mechanically or electrically interlocked contactors between the motor and the drive and between the motor and the power line. Ensure with interlocking that the contactors cannot be closed simultaneously.

WARNING! Never connect the supply power to the drive output terminals U2, V2 and W2. Line voltage applied to the output can result in permanent damage to the unit.

Example bypass connection

An example bypass connection is shown below.

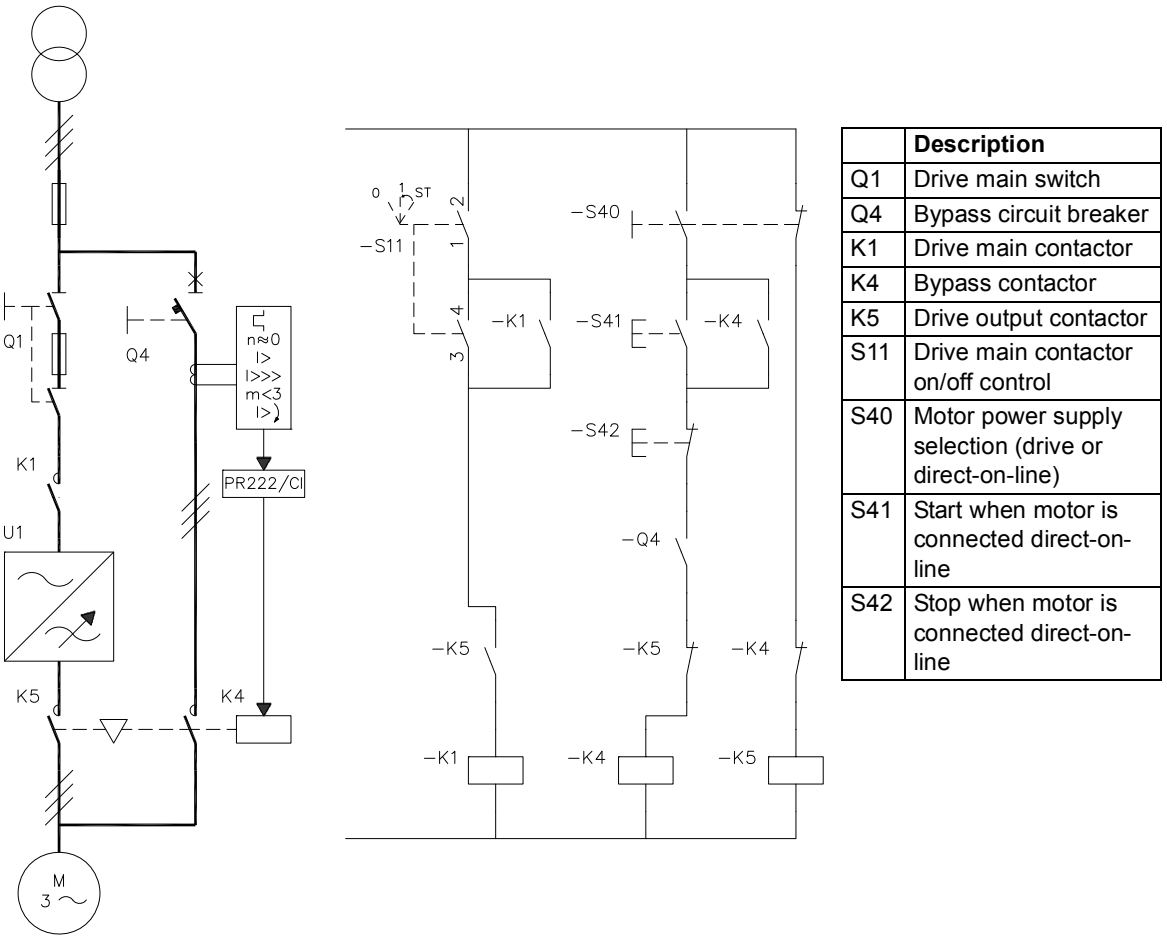

	Description
Q1	Drive main switch
Q4	Bypass circuit breaker
K1	Drive main contactor
K4	Bypass contactor
K5	Drive output contactor
S11	Drive main contactor on/off control
S40	Motor power supply selection (drive or direct-on-line)
S41	Start when motor is connected direct-on-line
S42	Stop when motor is connected direct-on-line

Switching the motor power supply from drive to direct-on-line

1. Stop the drive and the motor with the drive control panel (drive in local control mode) or the external stop signal (drive in remote control mode).
2. Open the main contactor of the drive with S11.

3. Switch the motor power supply from the drive to direct-on-line with S40.
4. Wait for 10 seconds to allow the motor magnetization to die away.
5. Start the motor with S41.

Switching the motor power supply from direct-on-line to drive

1. Stop the motor with S42.
2. Switch the motor power supply from direct-on-line to the drive with S40.
3. Close the main contactor of the drive with switch S11 (-> turn to position ST for two seconds and leave to position 1).
4. Start the drive and the motor with the drive control panel (drive in local control mode) or the external start signal (drive in remote control mode).

Protecting the contacts of relay outputs

Inductive loads (such as relays, contactors, motors) cause voltage transients when switched off.

The relay contacts of the RMIO board are protected with varistors (250 V) against overvoltage peaks. In spite of this, it is highly recommended to equip inductive loads with noise attenuating circuits (varistors, RC filters [AC] or diodes [DC]) in order to minimize the EMC emission at switch-off. If not suppressed, the disturbances may connect capacitively or inductively to other conductors in the control cable and form a risk of malfunction in other parts of the system.

Install the protective component as close to the inductive load as possible. Do not install the protective components at the terminal block.

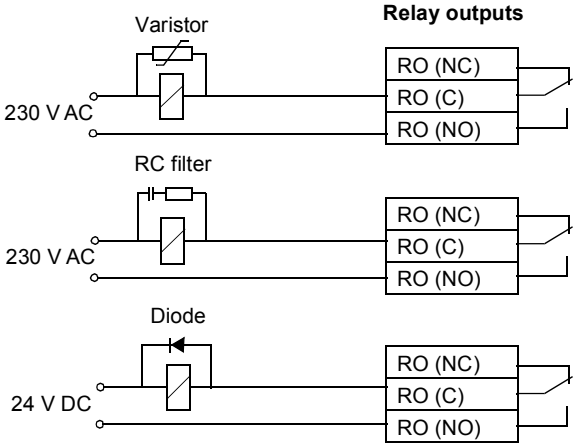

Considering the PELV on installation sites above 2000 metres (6562 feet)



WARNING! Wear appropriate protection when installing, operating or servicing the RMIO board wiring and optional modules attached to the board. The Protective Extra Low Voltage (PELV) requirements stated in EN 61800-5-1 are not fulfilled at altitudes above 2000 m (6562 ft).

Electrical installation

What this chapter contains

This chapter describes the electrical installation procedure of the drive.



WARNING! Only qualified electricians are allowed to carry out the work described in this chapter. Follow the *Safety instructions* on the first pages of this manual. Ignoring the safety instructions can cause injury or death.



WARNING! During the installation procedure, inverter modules may have to be temporarily extracted from the cabinet. The modules have a high centre of gravity.

Checking the insulation of the assembly

Drive

Do not make any voltage tolerance or insulation resistance tests on any part of the drive as testing can damage the drive. Every drive has been tested for insulation between the main circuit and the chassis at the factory. Also, there are voltage limiting circuits inside the drive which cut down the testing voltage automatically.

Supply cable

Check the insulation of the supply (input) cable according to local regulations before connecting to the drive.

Motor and motor cable

Check the insulation of the motor and motor cable as follows:

1. Check that the motor cable is connected to the motor, and disconnected from the drive output terminals U2, V2 and W2.
2. Measure the insulation resistance between each phase conductor and then between each phase conductor and the Protective Earth conductor using a measuring voltage of 1000 V DC. The insulation resistance of an ABB motor must exceed 100 Mohm (reference value at 25 °C or 77 °F). For the insulation resistance of other motors, consult the manufacturer’s instructions.

Note: Moisture inside the motor casing will reduce the insulation resistance. If moisture is suspected, dry the motor and repeat the measurement.

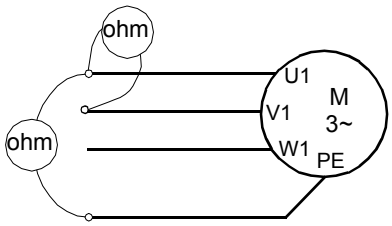

Braking resistor assembly

Check the insulation of the braking resistor assembly (if present) as follows:

1. Check that the resistor cable is connected to the resistor, and disconnected from the drive output terminals R+ and R-.
2. At the drive end, connect the R+ and R- conductors of the resistor cable together. Measure the insulation resistance between the combined conductors and the PE conductor by using a measuring voltage of 1 kV DC. The insulation resistance must be higher than 1 Mohm.

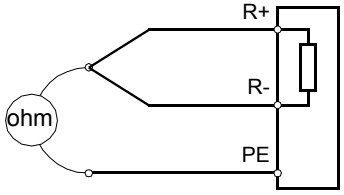

Checking the compatibility with IT (ungrounded) and corner grounded TN systems

EMC filter +E202 is not suitable for use in an IT (ungrounded) system. If the drive is equipped with EMC filter +E202, disconnect the filter before connecting the drive to the supply network. For detailed instructions on how to do this, please contact your local ABB representative.



WARNING! If a drive with EMC filter +E202 is installed on an IT system (an ungrounded power system or a high resistance-grounded [over 30 ohm] power system), the system will be connected to earth potential through the EMC filter capacitors of the drive. This may cause danger, or damage the unit.

Connecting the input power cable

Connection diagram

A connection diagram of frame R7i and R8i units is shown below. The input cable connection for frames 2×R8i and up is similar.

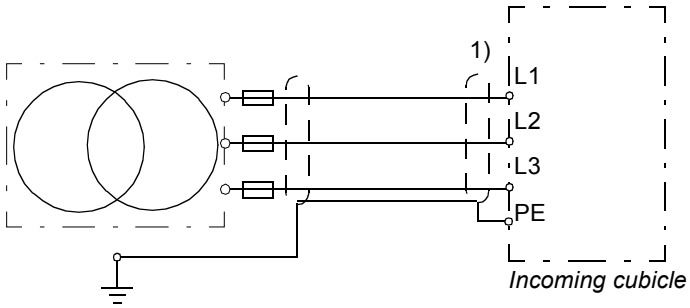

Notes:

1) Input power connection: L1, L2, L3 and PE. To be wired by the user.
For selection of input power cables, see page *74*.
For the input power cable terminal sizes, tightening torques and cabinet lead-through sizes, see section *Terminal and lead-through data for the input power cable* on page *162*.

Connection procedure

WARNING! Follow the instructions in chapter *Safety instructions*. Ignoring the instructions can cause physical injury or death, or damage to the equipment.

Note: Before making the cable connections, check that the input of the auxiliary voltage transformer (T10) is selected correctly according to the supply voltage.

1. Open the door of the cabinet.

2. Remove any shrouds that protect the input busbars and cable entries.

3. Lead the cables into the inside of the cubicle. It is recommended to apply 360° grounding of the cable shields at the entry as shown below.

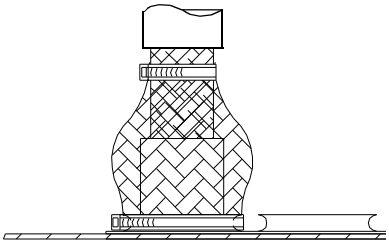

4. Connect the cables as follows:

- Twist the cable shields into bundles and connect to cabinet PE (ground) busbar. Connect any separate ground conductors or cables to cabinet PE (ground) busbar.
- Connect the phase conductors to the input power terminals (L1, L2, L3). For the tightening torques, see page *162*.

5. Provide support for the cables whenever necessary.

6. Refit all shrouds removed earlier and close the door.

Connecting the motor cable – units with no common motor terminals cubicle option +H359

Connection diagram – single inverter module feeds one motor

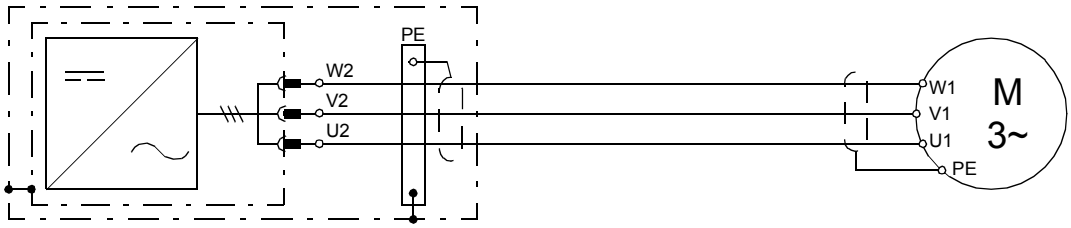

Inverter module cubicle

Connection diagram – parallel inverter modules feed one motor

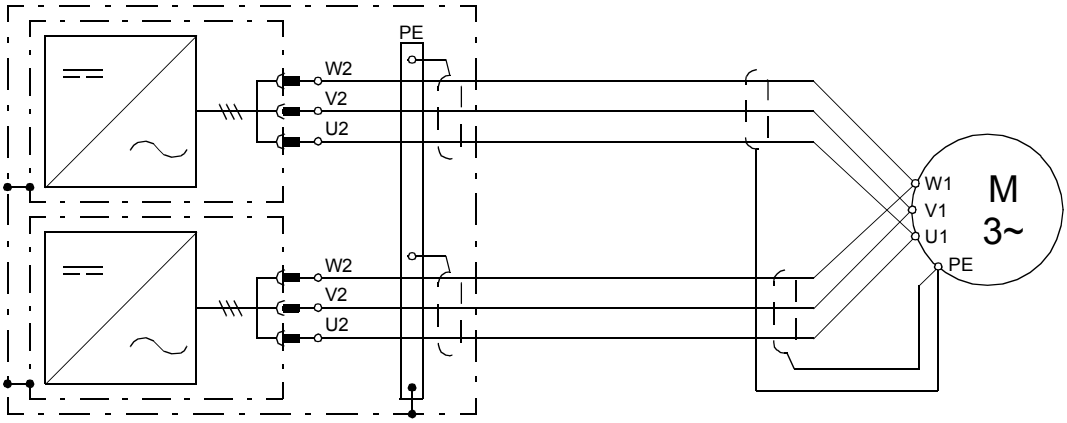

Inverter module cubicle

WARNING! The cabling from all inverter modules to the motor must be physically identical considering cable type, cross-sectional area, and length.

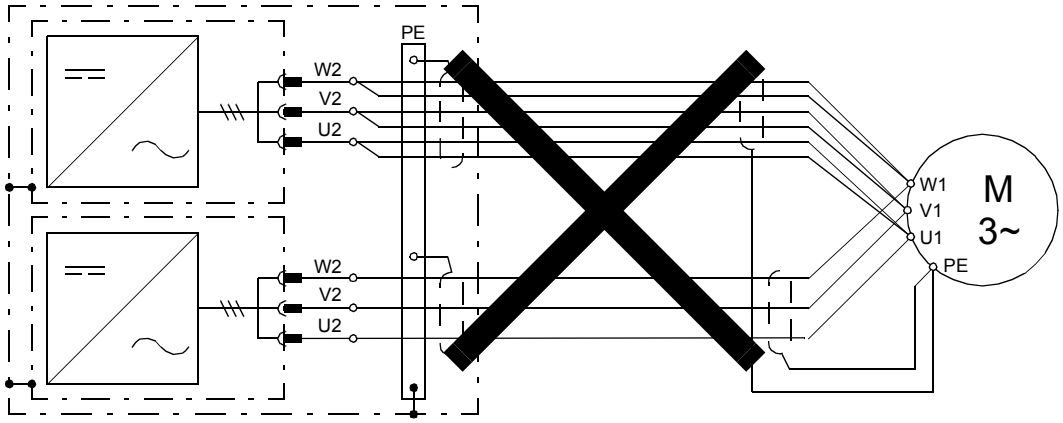

Inverter module cubicle

Connection procedure



WARNING! Follow the instructions in chapter *Safety instructions*. Ignoring the instructions can cause physical injury or death, or damage to the equipment.

1. Disconnect the inverter cubicle from the DC supply (open the DC switch or remove the fuses). Ensure by measuring that the drive is dead.
2. Open the door of the inverter module cubicle: Unlock the handle, release it from the holder and turn upwards to release the door locking mechanism.
3. Remove the shroud that protects the output busbars and cable entries.
4. Remove the cooling fans. See *Replacing the inverter module fans (2×R8i and up)* on page *130*.
5. Lead the cables into the inside of the cubicle. For minimum radio frequency interference and motor bearing current, ground the cable shield 360° at the lead-through.
6. Connect the cables as follows:
   - Cut the cables to suitable length. Strip the cables and conductors. Fasten the cable lugs to the conductor ends.
   - Twist the cable shields into bundles and connect to cabinet ground busbar.
   - Connect the phase conductors to the output terminals. See the appropriate connection diagram above.
   - Tighten the phase conductors and PE to 70 N·m (50 lbf·ft).
7. Refit the fans.
8. Refit the shroud removed earlier and close the door.
9. Connect the motor end of the cable (see the diagrams above). For minimum radio frequency interference and motor bearing current ground the cable shield 360° at the lead-through of the motor terminal box, or ground the cable by twisting the bare shield so that its width, when flattened, is at least 1/5 times its length (see the drawing below). For motor-specific instructions, see its documentation.

Inverter module cubicle from front, door closed

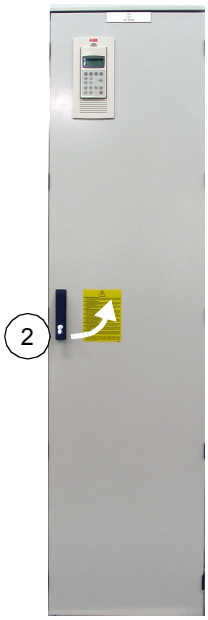

Inverter module cubicle from front, door open

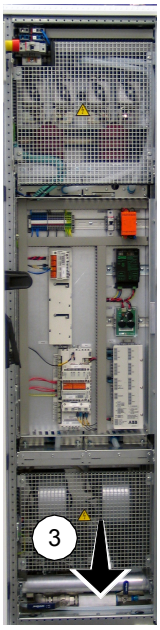

Lower part of the inverter module cubicle from front, shroud removed

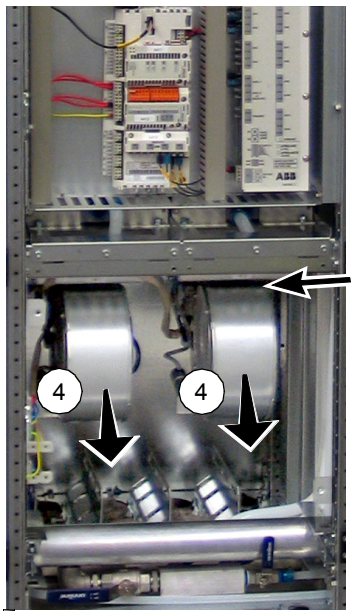

360° grounding of the cable shield at the inverter end

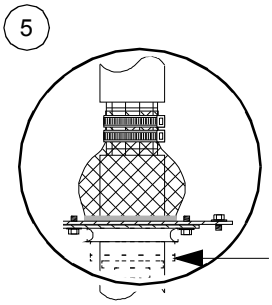

Alternative cable shield grounding means at the motor end

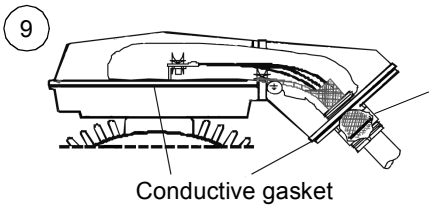

Alternative 2:
grounding the twisted shield

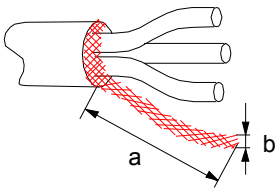

Connecting the motor cable (units with the common motor cable connection terminals cubicle option +H359)

Connection diagram

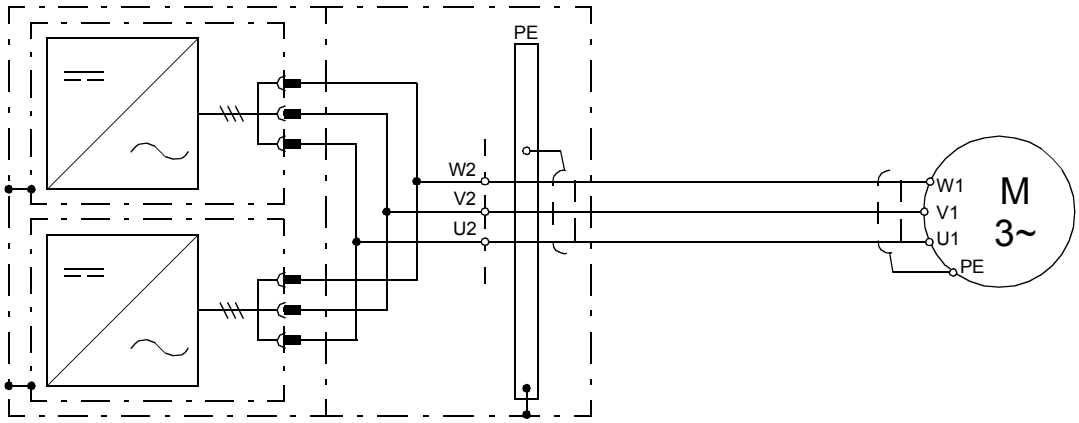

Connection procedure

WARNING! Follow the instructions in chapter *Safety instructions*. Ignoring the instructions can cause physical injury or death, or damage to the equipment.

1. Open the door of the common motor terminal cubicle: Unlock the handle, release it from the holder and turn upwards.
2. Remove the shrouds that protect the output busbars and cable entries.
3. Lead the cables into the cubicle. For minimum radio frequency interference and motor bearing current, ground the cable shield 360° at the lead-through.

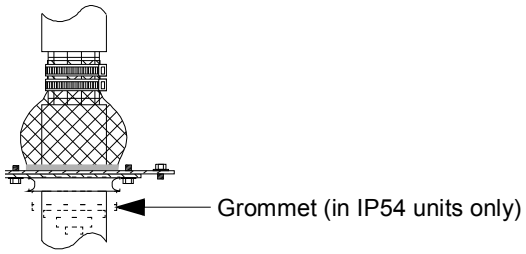

4. Connect the cables as follows:
   - Cut the cables to suitable length. Strip the cables and conductors. Fasten the cable lugs to the conductor ends.
   - Twist the cable shields into bundles and connect to cabinet PE (ground) busbar.
   - Connect the phase conductors to the output terminals. See the *Connection diagram* above.
   - Tighten the phase conductors and PE to 70 N·m (50 lbf·ft).
5. Refit the shrouds and close the door.
6. At the motor, connect the cables according to the *Connection diagram* above. For minimum radio frequency interference and motor bearing current ground the cable shield 360° at the lead-through of the motor terminal box, or ground the cable by twisting the shield as follows: flattened width ≥ 1/5 × length. For the motor specific instructions, see the manufacturer's user manual.

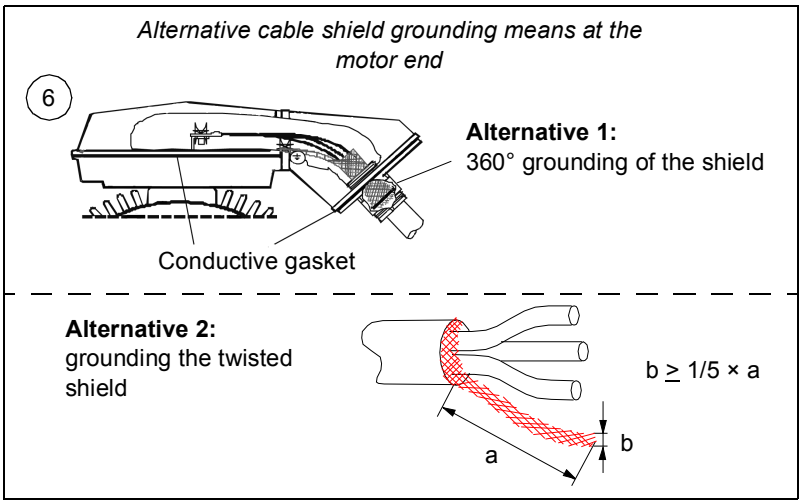

Connecting external power supply for the auxiliary circuits

Frames R7i×R7i and R8i×R8i

As standard, the drive auxiliary circuit is supplied from the main power supply of the drive through an auxiliary voltage transformer. You do not need to connect any external auxiliary power supply for the auxiliary circuits.

If the drive is equipped with option +G307 (Terminals for connecting external control voltage), connect the external power supply as shown in the figure below. The circuit breaker Q200 is located in the Incoming cubicle of the drive. Maximum fuse: 16 A. For the current consumption of the the circuitry, see section *Auxiliary circuit current consumption* on page *171*.

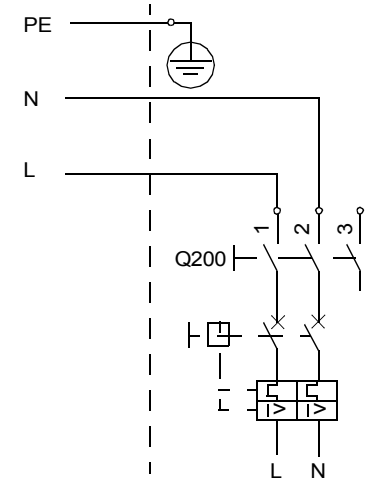

Power supply for control circuitry (units with option +G307 for UPS)

Frames 2×R8i and up

Standard unit without optional auxiliary control voltage transformer or terminals for connecting external control voltage

Connect the external auxiliary power supply for the cooling fans and control circuitry to breaker Q11. The breaker Q11 is located in the auxiliary control cubicle or in the inverter module cubicle. See section *Auxiliary circuit current consumption* on page *171* for the current consumption of the circuitry.

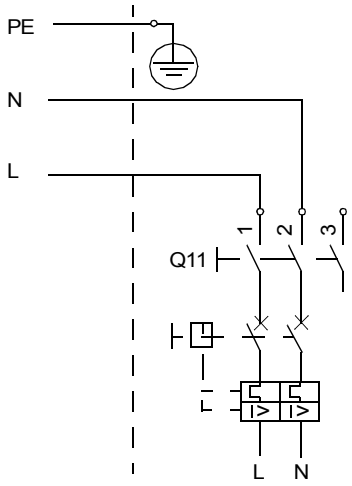

Power supply for fans and control circuitry (units without optional auxiliary control voltage transformer and without option +G307)

Units with optional auxiliary control voltage transformer and without terminals for connecting external control voltage (+G307)

Auxiliary power to drive cooling fans and control circuitry is supplied from the main power line through the optional auxiliary control voltage transformer (T10). No user connections are needed.

Units with terminals for connecting external control voltage (option +G307) and without optional auxiliary control voltage transformer

Connect the external auxiliary power supply for the drive control circuitry to breaker Q11. See section *Auxiliary circuit current consumption* on page *171* for the current consumption of the circuitry.

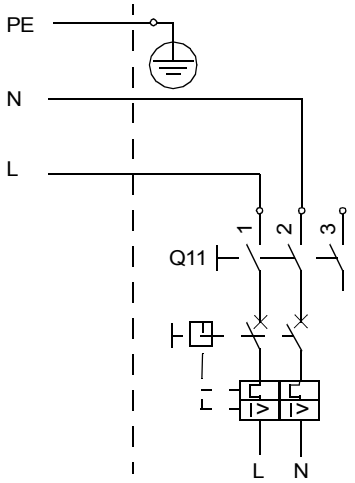

Power supply for control circuitry (units with option +G307 for UPS)

Connecting the control cables for the supply unit

The supply unit is controlled using the operating switch and optional reset and emergency stop buttons (option +G331) mounted on the cabinet door. No additional control connections are used or needed. However, it is also possible to

- halt the supply unit by an external emergency stop button (if the unit is equipped with a local emergency stop button, external buttons can be connected in series)
- read a fault indication through a relay output. **Note concerning options +C139, +C140 and +C141:** If relay output RO2 is used for on/off control of the optional liquid cooling unit, the fault indication is not in use. See page *46*.
- communicate with the unit through a serial communication interface.

The standard I/O connections are presented under section *Connections and use of the I/O in the supply unit*, page *46*. Refer to the circuit diagrams delivered with the drive for the connection terminals for the external control devices.

Connecting the control cables for the inverter unit

Default I/O connection diagram

RMIO

Terminal block size:

cables 0.3 to 3.3 mm^2 (22 to 12 AWG)

Tightening torque:

0.2 to 0.4 Nm

(0.2 to 0.3 lbf ft)

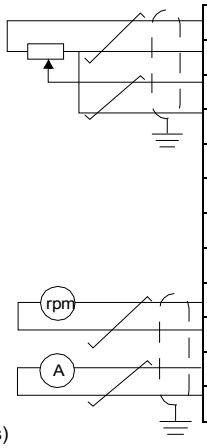

X2*		RMIO		
X20		X20		
1	– –	1	VREF-	Reference voltage -10 V DC, 1 kohm ≤ R_L ≤ 10 kohm
2	– –	2	AGND	
X21		X21		
1	– –	1	VREF+	Reference voltage 10 V DC, 1 kohm ≤ R_L ≤ 10 kohm
2	– –	2	AGND	
3	– –	3	AI1+	Speed reference 0(2)... 10 V, R_{in} > 200 kohm
4	– –	4	AI1-	
5	– –	5	AI2+	By default, not in use. 0(4)... 20 mA, R_{in} = 100 ohm
6	– –	6	AI2-	
7	– –	7	AI3+	By default, not in use. 0(4)... 20 mA, R_{in} = 100 ohm
8	– –	8	AI3-	
9	– –	9	AO1+	Motor speed 0(4)...20 mA ≙ 0...motor nom. speed, R_L ≤ 700 ohm
10	– –	10	AO1-	
11	– –	11	AO2+	Output current 0(4)...20 mA ≙ 0...motor nom. current, R_L ≤ 700 ohm
12	– –	12	AO2-	
X22		X22		
1	– –	1	DI1	Stop/Start
2	– –	2	DI2	Forward/Reverse [1]
3	– –	3	DI3	Not in use
4	– –	4	DI4	Acceleration & deceleration select [2]
5	– –	5	DI5	Constant speed select [3]
6	– –	6	DI6	Constant speed select [3]
7	– –	7	+24VD	+24 V DC max. 100 mA
8	– –	8	+24VD	
9	– –	9	DGND1	Digital ground
10	– –	10	DGND2	Digital ground
11	– –	11	DIIL	Start interlock (0 = stop) [4]
X23		X23		
1	– –	1	+24V	Auxiliary voltage output and input, non-isolated, 24 V DC 250 mA [5]
2	– –	2	GND	
X25		X25		
1	– –	1	RO1	Relay output 1: ready
2	– –	2	RO1	
3	– –	3	RO1	
X26		X26		
1	– –	1	RO2	Relay output 2: running
2	– –	2	RO2	
3	– –	3	RO2	
X27		X27		
1	– –	1	RO3	Relay output 3: fault (-1)
2	– –	2	RO3	
3	– –	3	RO3	

Fault

* optional terminal block (not in all units)

[1] Only effective if par. 10.03 is set to REQUEST by the user.

[2] 0 = open, 1 = closed

DI4	Ramp times according to
0	parameters 22.02 and 22.03
1	parameters 22.04 and 22.05

[3] See par. group 12 CONSTANT SPEEDS.

DI5	DI6	Operation
0	0	Set speed through AI1
1	0	Constant speed 1
0	1	Constant speed 2
1	1	Constant speed 3

[4] See parameter 21.09 START INTRL FUNC.

[5] Total maximum current shared between this output and optional modules installed on the board.

External control cable connections to the RMIO board for the ACS800 standard control program (Factory macro) are shown in the above diagram. For external control connections of other application macros, see the *Standard Control Program Firmware Manual* (3AFE64527592 [English]).

Connection procedure

WARNING! Follow the instructions in chapter *Safety instructions*. Ignoring the instructions can cause physical injury or death, or damage to the equipment.

Open the cabinet door(s).

Remove any shrouds that limit access to the cable lead-throughs and cable trunking.

Run the cables into the inside of the cabinet through the grommets provided.

Top entry units only: If several cables need to be run through one grommet, use Loctite 5221 (cat. no. 25551) under the grommet to seal the cable entry.

Units with EMI conductive cushions only:

Run the cables between the cushions as shown below. Strip the cable at this location to enable proper connection of the bare shield and the cushions. Tighten the cushions firmly onto the cable shields.

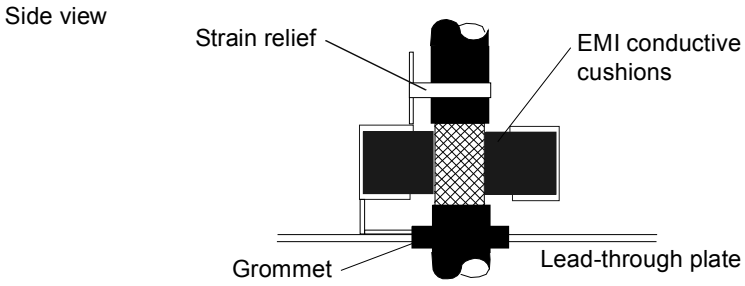

If the outer surface of a cable shield is non-conductive, turn the shield inside out as shown below and apply copper foil to keep the shielding continuous. Do not cut the grounding wire (if present).

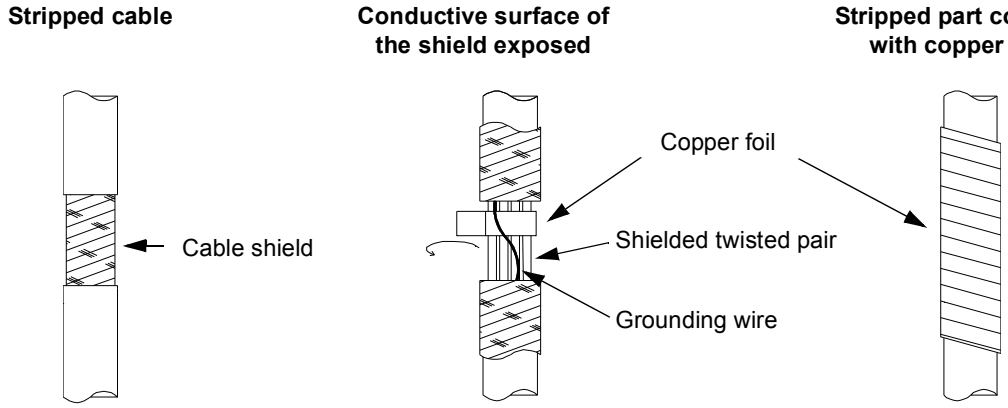

On top entry units, sort the cables so that the thinnest and thickest cables are at opposite ends of the opening.

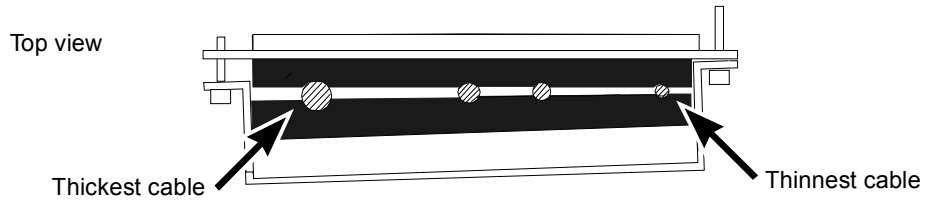

Run the cables to the appropriate terminals. Wherever possible, use the existing cable trunking in the cabinet. Use sleeving wherever the cables are laid against sharp edges. **Note:** When running cables to the swing-out frame, leave some slack in the cable at the hinge to allow the frame to open fully. Tie the cables to the cable supports wherever necessary.
Cut the cables to suitable length. Strip the cables and conductors.
Twist the cable shields into bundles and connect them to the ground terminal nearest to the terminal block. Keep the unshielded portion of the cables as short as possible.
Connect the conductors to appropriate terminals. See page *100* for the location of the control unit and the circuit diagrams delivered with the unit.
Refit any shrouds removed earlier. Close the cabinet door(s).

Connecting a PC



WARNING! Read and follow the instructions given in chapter *Safety instructions*. Ignoring the instructions can cause physical injury or death, or damage to the equipment.

Connect PC to CH3 of RDCO board via a fiber optic link. RDCO is attached to an option slot of the RDCU unit. See also *Fiber optic links* below.

Installing optional modules



WARNING! Read and follow the instructions given in chapter *Safety instructions*. Ignoring the instructions can cause physical injury or death, or damage to the equipment.

Insert optional modules (such as fieldbus adapters, I/O extension modules and pulse encoder interfaces) into the optional module slots of the RDCU unit and secure with two screws. The slots on the RDCU unit are described in *Overview of power and control connections* on page *43*. See also the appropriate optional module manual for information on the cable connections.

Cabling of I/O and fieldbus modules

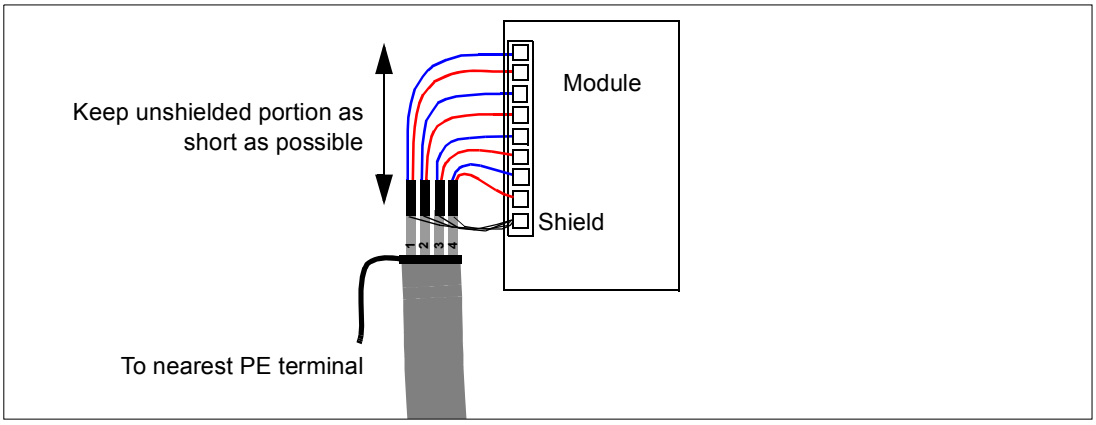

Cabling of pulse encoder interface module

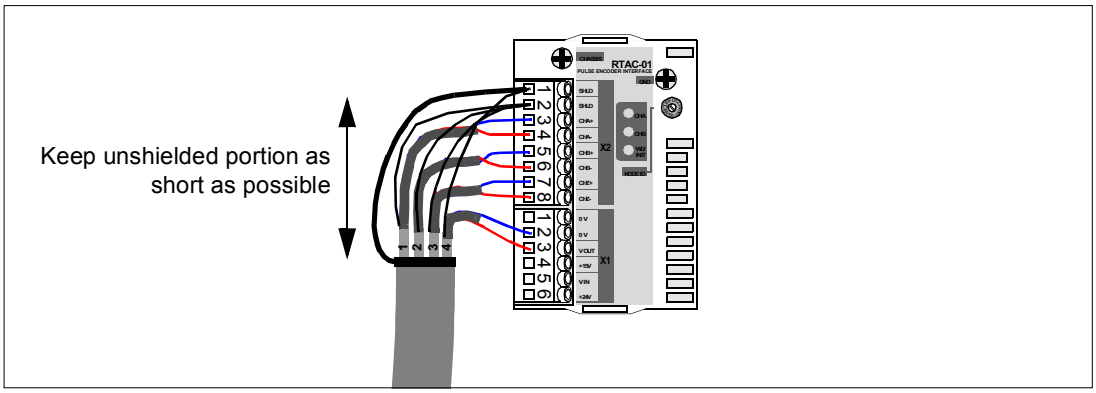

Note 1: If the encoder is of unisolated type, ground the encoder cable at the drive end only. If the encoder is galvanically isolated from the motor shaft and the stator frame, ground the encoder cable shield at the drive and the encoder end.

Note 2: Twist the pair cable wires.

Fiber optic links

DDCS fiber optic links are provided by RDCO modules (optionally installed on the RDCU control units) for PC tools, master/follower link, NDIO, NTAC, NAIO, AIMA I/O module adapter and fieldbus adapter modules of type Nxxx. See the *RDCO User's Manual* (3AFE 64492209 [English]) for the connections. Observe colour coding when installing fiber optic cables. Blue connectors go to blue terminals, and grey connectors to grey terminals.

When installing multiple modules on the same channel, connect them in a ring.

Installation checklist

What this chapter contains

This chapter contains an installation checklist.

Installation checklist

Check the mechanical and electrical installation of the drive before start-up. Go through the checklist together with another person.



WARNING! Only qualified electricians are allowed to carry out the work described below. Follow the complete safety instructions of the drive. Ignoring the safety instructions can cause injury or death.

Open the main disconnector of the drive and lock it to open position.

Ensure by measuring that the drive is not powered.

☒	**Check that …**
☐	The drive cabinet has been fixed to floor, and if necessary (due to vibration etc.), also from top to the wall or roof.
☐	The ambient operating conditions meet the specification in chapter *Technical data*.
☐	If the drive will be connected to an IT (ungrounded) or a corner grounded TN supply network: The varistors and EMC filter of the drive (if any) have been disconnected. See chapter *Electrical installation*.
☐	If the drive has been stored over one year: The electrolytic DC capacitors in the DC link of the drive have been reformed. See the separate reforming instructions (available in the Internet of from a local ABB representative).
☐	There is an adequately sized protective ground conductor between the drive and the switchboard.
☐	There is an adequately sized protective ground conductor between the motor and the drive.
☐	All protective ground conductors have been connected to the appropriate terminals and the terminals have been tightened (pull conductors to check).
☐	The supply voltage matches the nominal input voltage of the drive. Check the type designation label.
☐	The input power cable has been connected to appropriate terminals, the phase order is right, and the terminals have been tightened (pull conductors to check).
☐	The motor cable has been connected to appropriate terminals, the phase order is right, and the terminals have been tightened (pull conductors to check).
☐	The brake resistors (present only with option +D151) has been connected to appropriate terminals, and the terminals have been tightened (pull conductors to check).
☐	The voltage setting of the auxiliary voltage transformer T10 (if any) meet the supply voltage.

☒	**Check that …**
☐	The motor cable (and brake resistor cable, if present) has been routed away from other cables.
☐	No power factor compensation capacitors have been connected to the motor cable.
☐	The control cables (if any) have been connected to the appropriate terminals on the inverter control board.
☐	If a drive bypass connection will be used: The direct -on-line contactor of the motor and the drive output contactor are either mechanically or electrically interlocked (cannot be closed simultaneously).
☐	There are no tools, foreign objects or dust from drilling inside the drive.
☐	The cooling circuit joints at the shipping split joining cubicles are tight.
☐	All bleed and drain valves have been closed.
☐	All shrouds and cover of the motor connection box are in place. Cabinet doors have been closed.
☐	The motor and the driven equipment are ready for start.

Start-up

What this chapter contains

This chapter contains start-up instructions for the drive.

Start-up procedure

These instructions do not cover all start-up tasks of all possible variants of the drive, just the basic steps. Always refer to the delivery-specific circuit diagrams when proceeding with the start-up.

The designations in square brackets refer to the designations used in the circuit diagrams.

Note: The coating of the brake resistor burns out at the first use.

Action	Additional information
Safety	
 **WARNING!** Only qualified electricians are allowed to commission the drive. Read and follow the safety instructions on the first pages of this manual. Neglecting the safety instructions can cause injury or death. **WARNING!** Ensure that the disconnector of the supply transformer is locked to open position ie, no voltage is, or can be connected to the drive inadvertently. Check also by measuring that there is no voltage connected.	
Checks with no voltage connected	
☐ Drive with main breaker (frame 2xRi+2xR8i and bigger units) Check the current trip limits of the breaker preset at the factory. *General rule* Ensure the selectivity condition is fulfilled ie, the breaker trips at a lower current than the protection device of the supplying network, and that the limit is high enough not to cause unnecessary trips during the intermediate DC circuit load peak at start. *Long-term current limit* As a rule of thumb, this should be set to the rated input AC current of the drive. *Peak current limit* As a rule of thumb, this should be set to a value 3…4 times the rated input AC current of the drive.	
☐ Check the settings of the relays and breakers/switches of the auxiliary circuits.	Optional devices. See delivery specific circuit diagrams.
☐ Disconnect any unfinished or unchecked 230/115 V AC cables that lead from the terminal blocks to the outside of the equipment.	
☐ Frame 2×R8i and up: Enable the memory backup battery on the PPCS branching units (APBU) by setting actuator 6 of switch S3 to ON. The branching units are located on the supply and inverter module cubicle swing-out frames.	By default, memory backup is switched off to save the battery.

Action	Additional information
☐ Fill up and bleed the internal cooling circuit. Ensure that the coolant can flow freely in all cubicles. Start the cooling unit up.	Chapter *Internal cooling circuit*. For drives with the optional cooling unit (option codes +C140 or +C141), see *ACS800-1007LC User's Manual* (3AFE68621101 [English]).
Connecting voltage to the input terminals and auxiliary circuit	
 **WARNING!** Make sure that it is safe to apply voltage. Ensure that: • nobody is working on the unit or circuits that are wired from outside into the cabinets • covers of motor terminal boxes are in place.	
☐ Close the circuit breakers which connect the voltage to essential auxiliary devices, in other words: fans, boards, main breaker/contactor control circuit, emergency stop circuit, 24 V DC power supply.	To locate the circuit breakers, see the delivery-specific circuit diagrams and the cubicle designations on cabinet doors.
☐ Close the cabinet doors.	
☐ Close the breaker of the supply transformer.	
☐ Drive with a grounding switch (option +F259): Open the grounding switch.	
☐ Drive with main contactor (frames R7i+R7i and R8i+R8i: Close the main switch disconnector (Q1). Drive with main breaker (frame 2xRi+2xR8i and bigger units): Rack the withdrawable breaker in.	
Closing the main contactor/breaker	
☐ Turn the operating switch to position S for two seconds and then back to position 1.	
Checking the setting of the ground fault monitoring device	Option +Q954. See *IRDH275 Operating Manual* by Bender (code: TGH1386) and the circuit diagrams delivered with the drive
☐ Check the settings of the ground fault monitoring device.	
Supply unit control program set-up	
Parameters of the IGBT supply unit control program need not be set during the start-up procedure, or in normal use. In case the parameters need to be changed, switch the control panel to communicate with the supply unit as described in section *Switching the control panel between the supply and inverter units* on page *116*. Alternatively, connect a PC equipped with a start-up and maintenance tool tool eg, DriveWindow, to channel CH3 of the inverter unit's RDCU.	*ACS800 IGBT Supply Control Program Firmware Manual* (3AFE68315735 [English])
Inverter unit control program set-up	
☐ Set the the inverter unit control program parameters. Set parameter 98.01 COMMAND SEL to I/O.	Firmware manual of the inverter unit
☐ Units with sine filter (option +E206): Set parameter 95.04 EX/SIN REQUEST to SIN or EX&SIN.	
Liquid cooling unit control program set-up	
☐ Units with optional liquid cooling unit (options +C139, +C140, +C141): Check that parameter 33.01 CONTROL TYPE is set to LOCAL CTRL in the liquid cooling unit control program.	Control panel of the liquid cooling unit must be in remote control mode Switch with the LOC/REM key of the panel. *ACS800-1007LC Liquid-cooling Unit User's Manual* (3AFE68621101)

Action	Additional information
☐ Check that the pump starts when digital inputs DI5 (off/on) and DI6 (stop/start) are switched on.	
Starting the inverter unit	
☐ Start the inverter unit.	Firmware manual of the inverter unit
On-load checks	
☐ Check that the cooling fans rotate freely in the right direction, and the air flows upwards.	
☐ Check the rotation direction of the motor.	
☐ Check that the motor starts, stops and follows the speed reference when controlled with the control panel.	
☐ Check that the motor starts, stops and follows the speed reference when controlled through the customer-specific I/O or fieldbus.	
☐ Units with an emergency stop function (options +Q951, +Q952, +Q963 and +Q964): Test and validate the operation of the Emergency stop function.	See *Wiring, start-up and operation instructions of safety options (+Q950, +Q951, +Q952, +Q963, +Q964, +Q967 and +Q968) for ACS800 cabinet-installed drives* (3AUA0000026238 [English]) and the circuit diagrams delivered with the drive.
☐ Units with cooling unit (options +C139, +C140, +C141): Make the on-load checks and adjustments of the cooling unit.	See *ACS800-1007LC Liquid-cooling Unit User's Manual* (3AFE68621101 [English]).
☐ Units with the Safe torque off function (option +Q968): Test and validate the operation of the function.	See *Wiring, start-up and operation instructions of safety options (+Q950, +Q951, +Q952, +Q963, +Q964, +Q967 and +Q968) for ACS800 cabinet-installed drives* (3AUA0000026238 [English]) and the delivery-specific circuit diagrams.
☐ Units with the Prevention of unexpected start function (option +Q950): Test the operation of the function.	See *Wiring, start-up and operation instructions of safety options (+Q950, +Q951, +Q952, +Q963, +Q964, +Q967 and +Q968) for ACS800 cabinet-installed drives* (3AUA0000026238 [English]) and the delivery-specific circuit diagrams.

Switching the control panel between the supply and inverter units

The control panel is switched between the supply unit and inverter units as follows:

Changing control to the supply unit			
Step	**Action**	**Press…**	**Display (example)**
1.	To enter the Drive Selection Mode **Note:** In local control mode, the inverter unit trips if parameter 30.02 PANEL LOSS is set to FAULT. Refer to the appropriate application program firmware manual.		ACS 800 0490_3LM ASXR7xxx ID-NUMBER 1
2.	To scroll to ID number 2		ISU 800 0490_3LM IXXR7xxx ID-NUMBER 2
3.	To verify the change to the supply unit and display the warning or fault text		2 -> 380.0 V ISU 800 0490_3LM *** FAULT *** DC OVERVOLT 3210)
Changing control to the inverter unit			
Step	**Action**	**Press…**	**Display (example)**
1.	To enter the Drive Section Mode		ISU 800 0490_3LM IXXR7xxx ID-NUMBER 2
2.	To scroll to ID number 1		ACS 800 0490_3LM ASXR7xxx ID-NUMBER 1
3.	To verify the change to the inverter unit		1 L -> 0.0 rpm I FREQ 0.00 Hz CURRENT 0.00 A POWER 0.00 %



WARNING! The drive does not stop by pressing the control panel Stop key in remote control mode.

ACS800-37LC-specific parameters in the IGBT Supply Control Program

The ACS800-37LC specific signals and parameters of IGBT Supply Control Program are described in the tables below.

Terms and abbreviations

Term	Definition
B	Boolean
C	Character string
Def.	Default value
FbEq	Fieldbus equivalent: the scaling between the value shown on the control panel and the integer used in serial communication
I	Integer
R	Real
T.	Data type (see B, C, I, R)

Parameters

No.	Name/Value	Description	T./FbEq	Def.
16 SYSTEM CTR INPUTS		Parameter lock, parameter back-up etc.		
16.15	START MODE	Selects the start mode.	B	LEVEL
	LEVEL	Starts the supply unit by the level of digital input DI7. The supply unit starts to modulate and the charging resistors will be by-passed when the supply unit RMIO board is powered, its digital input DI2 is ON and there are no faults.	0	
	EDGE	Starts converter by EDGE of control command. Control command is selected by parameters *98.01 COMMAND SEL* and *98.02 COMM. MODULE*.	1	
30 FAULT FUNCTIONS		Programmable fault functions		
30.13	DI7 EXT EVENT	Not in use.		
30.14	DI7 TRIP DELAY	Not in use.		
31 AUTOMATIC RESET		Automatic fault reset. Automatic resets are possible only for certain fault types and when the automatic reset function is activated for that fault type. The automatic reset function does not operate if the drive is in local control (L visible on the first row of the control panel display). **WARNING!** If the start command is selected and it is ON, the supply unit may restart immediately after automatic fault reset. Ensure that the use of this feature will not cause danger. **WARNING!** Do not use these parameters when the drive is connected to a common DC bus. The charging resistors may be damaged in an automatic reset.		
31.01	NUMBER OF TRIALS	Defines the number of automatic fault resets the drive performs within the time defined by parameter 31.02.	I	0
	0 … 5	Number of the automatic resets	0	

No.	Name/Value	Description	T./FbEq	Def.
31.02	TRIAL TIME	Defines the time for the automatic fault reset function. See parameter 31.01.	R	30 s
	1.0 … 180.0 s	Allowed resetting time	100 … 18000	
31.03	DELAY TIME	Defines the time that the drive will wait after a fault before attempting an automatic reset. See parameter 31.01.	R	0 s
	0.0 … 3.0 s	Resetting delay	0 … 300	
31.04	OVERCURRENT	Activates/deactivates the automatic reset for the supply unit overcurrent fault.	B	NO
	NO	Inactive	0	
	YES	Active	65535	
31.05	OVERVOLTAGE	Activates/deactivates the automatic reset for the intermediate link overvoltage fault.	B	NO
	NO	Inactive	0	
	YES	Active	65535	
31.06	UNDERVOLTAGE	Activates/deactivates the automatic reset for the intermediate link undervoltage fault.	B	NO
	NO	Inactive	0	
	YES	Active	65535	

Default values of parameters with the ACS800-37LC

When the IGBT Supply Control Program is loaded into the ACS800-37LC, the following parameters receive the default values given in the table below. Do not change the default values (except the value of parameter 98.01 COMMAND SEL). If they are changed, the drive will not operate properly.

Parameter		Default value
11.01	DC REF SELECT	FIELDBUS
11.02	Q REF SELECT	PARAM 24.02
70.01	CH0 NODE ADDR	120
70.19	CH0 HW CONNECTION	RING
70.20	CH3 HW CONNECTION	RING
71.01	CH0 DRIVEBUS MODE	NO
98.01	COMMAND SEL	MCW
98.02	COMM. MODULE	INU COM LIM
201.09	PANEL DRIVE ID	2
202.01	LOCAL LOCK	TRUE

ACS800-37LC-specific parameters in the application program

The ACS800-37LC specific actual signals and parameters in the ACS800 Standard Control Program (running on the inverter control board) are described below.

Terms and abbreviations

Term	Definition
Actual signal	Signal measured or calculated by the drive. Can be monitored by the user. No user setting possible.
FbEq	Fieldbus equivalent: The scaling between the value shown on the control panel and the integer used in serial communication.
Parameter	A user-adjustable operation instruction of the drive

Actual signals and parameters of supply unit in inverter unit program

No.	Name/Value	Description	FbEq	Def.
09 ACTUAL SIGNALS		Signals from the supply unit.		
09.12	LCU ACT SIGNAL 1	Line-side converter signal selected by parameter *95.08 LCU PAR1 SEL*.	1 = 1	106
09.13	LCU ACT SIGNAL 2	Line-side converter signal selected by parameter *95.09 LCU PAR2 SEL*.	1 = 1	110

No.	Name/Value	Description	FbEq	Def.
95 HARDWARE SPECIF		Line-side converter references and actual signal selections.		
95.06	LCU Q PW REF	Reactive power reference for the line-side converter i.e. the value for par. *24.02 Q POWER REF2* in the IGBT Supply Control Program. Scaling example 1: 10000 equals to a value of 10000 of parameter *24.02 Q POWER REF2* and 100% of par. *24.01 Q POWER REF* (i.e. 100% of the converter nominal power given in par. *04.06 CONV NOM POWER*) when par. *24.03 Q POWER REF2 SEL* is set to PERCENT. Scaling example 2: Par. *24.03 Q POWER REF2 SEL* is set to kVAr. A value of 1000 of par. *95.01* equals to 1000 kVAr of par. *24.02 Q POWER REF2*. Value of par. *24.01 Q POWER REF* is then 100 (1000 kVAr divided by converter nominal power in kVAr)%. Scaling example 3: Par. *24.03 Q POWER REF2 SEL* is set to PHI. A value of 10000 of par. *95.01* equals to a value of 100 deg of parameter *24.02 Q POWER REF2* which is limited to 30 deg. The value of par. *24.01 Q POWER REF* will be determined approximately according to the following equation where P is read from actual signal *1.09 POWER*: $\cos 30 = \frac{P}{S} = \frac{P}{\sqrt{P^2 + Q^2}}$ 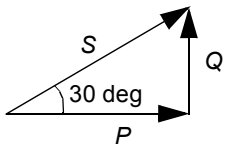 Positive reference 30 deg denotes capacitive load. Negative reference 30 deg denotes inductive load. 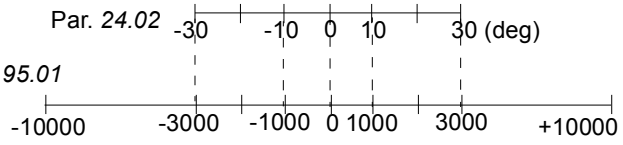		0
	-10000 ... +10000	Setting range.	1 = 1	
95.07	LCU DC REF	DC voltage reference for line converter i.e. the value for parameter *23.01 DC VOLT REF*.		0
	0 … 1100 V	Setting range in volts.	1 = 1 V	
95.08	LCU PAR1 SEL	Selects the line converter address from which actual signal *9.12 LCU ACT SIGNAL 1* is read.		106
	0 … 10000	Parameter index	1 = 1	
95.09	LCU PAR2 SEL	Selects the line converter address from which actual signal *9.13 LCU ACT SIGNAL 2* is read.		110
	0 … 10000	Parameter index	1 = 1	

Fault tracing

LEDs

Location	LED	Indication
RMIO board (RDCU drive control unit)	Red	Fault state.
	Green	The power supply on the board is OK.
Control panel mounting platform (with the control panel removed)	Red	Fault state.
	Green	The main +24 V power supply for the control panel and the RMIO board is OK.
AINT board (visible through the transparent cover on the front of the supply and inverter modules	V204 (green)	+5 V voltage of the board is OK.
	V309 (red)	Prevention of unexpected start or Safe torque off is ON.
	V310 (green)	IGBT control signal transmission to the gate driver control boards is enabled.

Warning and fault messages

The control panel will display the warnings and faults of the unit (supply or inverter unit) that the panel is currently monitoring.

Information on warnings and faults concerning the supply unit are contained within the *IGBT Supply Control Program Firmware Manual* (3AFE68315735 [English]).

The warnings and faults concerning the inverter unit vary depending on the delivery. For them, refer to the inverter control program firmware manual delivered with the drive.

Warning/Fault message from the unit not being monitored by the control panel

Flashing messages WARNING, ID:2 or FAULT, ID:2 on the control panel display indicate a warning or fault state in the supply unit when the panel is controlling the inverter unit, for example:

```
 FAULT, ID:2
ACS 800 0490_3MR
*** FAULT ***
LINE CONV      (FF51)
```

To display the warning or fault identification text, switch the control panel to view the supply unit as described in section *Switching the control panel between the supply and inverter units* on page *116*.

Conflicting ID numbers

The ID numbers of the supply unit and inverter unit are defined at the factory. Do not change the settings. If you change the ID numbers equal by accident, the panel stops communicating with either of the units. Correct the settings as follows:

- Disconnect the panel cable from the RMIO board of the inverter unit.
- Set the ID number of the supply unit RMIO board to 2. For the setting procedure, see the inverter control program firmware manual.
- Connect the disconnected cable to the RMIO board of the inverter unit again and set the ID number to 1.

Maintenance

What this chapter contains

This chapter contains preventive maintenance instructions.

Maintenance intervals

If installed in an appropriate environment, the drive requires very little maintenance. This table lists the routine maintenance intervals recommended by ABB.

Interval	Maintenance action	Instruction
Every year	Drives with IP54 degree of protection: door filter check and replacement if dirty	-
Every year of storage	Capacitor reforming	See *Capacitor Reforming Instructions* (3BFE64059629 [English]).
Every 3 years	Checking and cleaning of the diode supply and inverter module quick connectors	-
Every 6 years	Cabinet cooling fan change	See section *Fans*.
	Power module cooling fan change	
Every 9 years	Capacitor change	Contact ABB.
Every 10 years	Memory backup battery renewal of PPCS branching unit (APBU-xx)	See section *Replacing the PPCS branching unit (APBU-xx) memory backup battery* on page *139*.

Consult your local ABB Service representative for more details on the maintenance. On the Internet, go to http://www.abb.com/drives.

Note: If the drive is equipped with the cooling unit (options +C139, +C140 or +C141), see also the maintenance intervals given in *ACS800-1007LC User's Manual* (3AFE68621101 [English]).

Fans

Replacing the converter module cooling fan (frames R7i and R8i)

Replace the fan as described under *Replacing the cooling fans in supply module cubicle*, page *129*.

Replacing the additional fan in the incoming cubicle (frames R7i+R7i and R8i+R8i)

WARNING! Follow the instructions in chapter *Safety instructions*. Ignoring the instructions can cause physical injury or death, or damage to the equipment.

1. Disconnect the drive from the power line.
2. Open the incoming cubicle door.
3. Remove the four mounting screws of the fan.
4. Disconnect the fan power cable.
5. Pull out the fan.
6. Install new fan in reverse order.

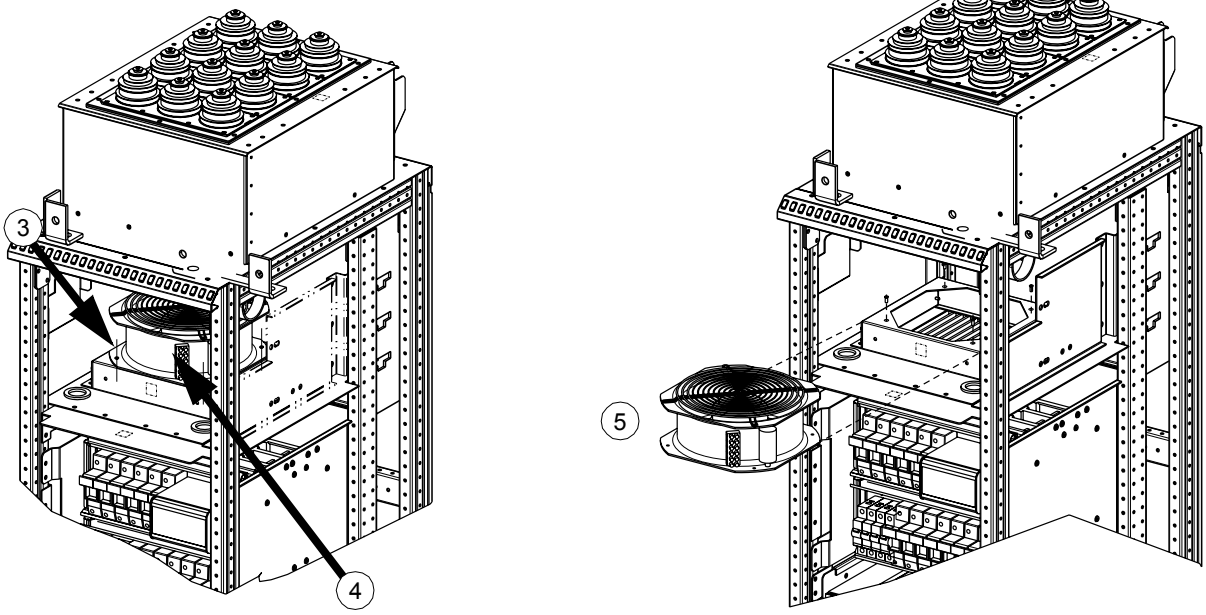

Replacing the auxiliary control cubicle fan (frames 2×R8i+2×R8i and up)

WARNING! Follow the instructions in chapter *Safety instructions*. Ignoring the instructions can cause physical injury or death, or damage to the equipment.

1. Disconnect the drive from the power line.
2. Open the auxiliary control cubicle door.
3. Loosen the two screws that fasten the fan mounting plate.
4. Disconnect the fan power cable.
5. Pull out the fan together with its mounting plate.
6. Undo the four screws that fasten the fan to its mounting plate.
7. Install new fan in reverse order.

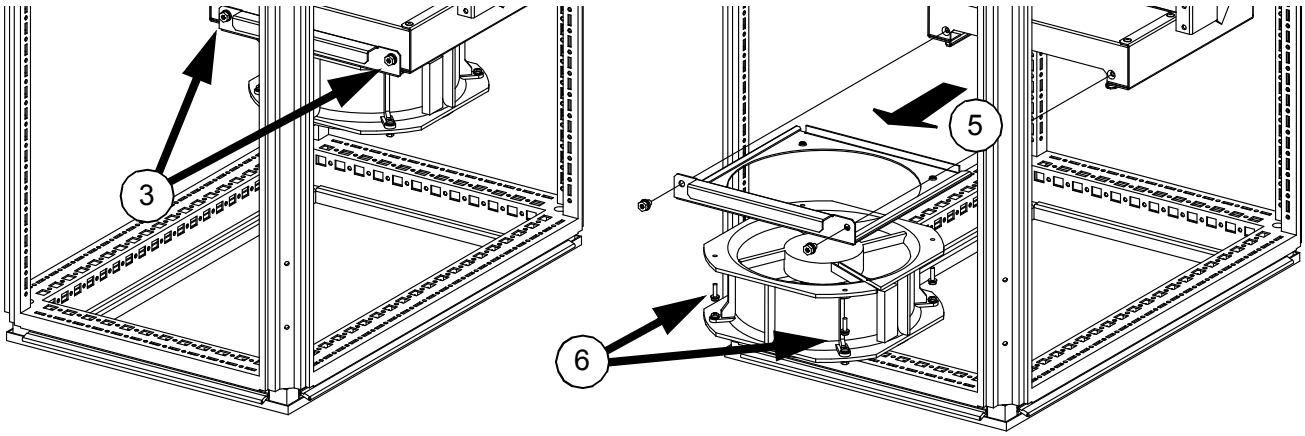

Replacing the fan in the incoming cubicle (frames 2×R8i+2×R8i and up)

WARNING! Follow the instructions in chapter *Safety instructions*. Ignoring the instructions can cause physical injury or death, or damage to the equipment.

1. Disconnect the drive from the power line.
2. Open the door and remove the shroud to gain access to the fan.
3. Remove the four mounting screws (and the four nuts in 1000 mm cubicle) of the fan.
4. Disconnect the power supply cable of the fan and pull the fan out of the cubicle.
5. Remove the four screws (and the four nuts in 1000 mm cubicle) that fasten the fan and the fan grille.
6. Install a new fan in reverse order.

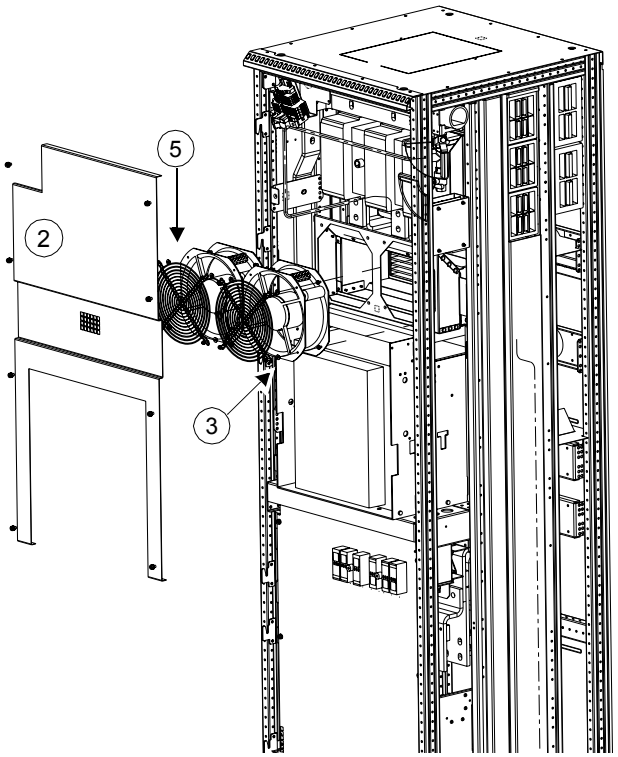

600 mm wide cubicle

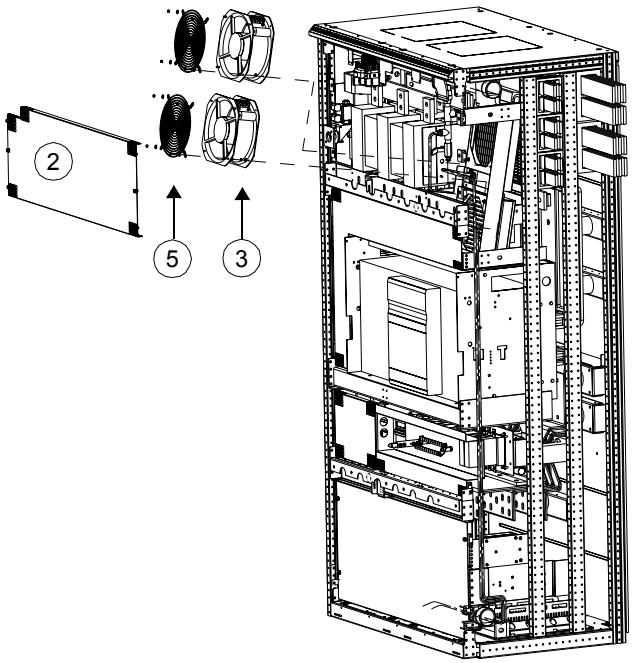

1000 mm wide cubicle

Replacing the cooling fans in supply module cubicle

WARNING! Follow the instructions in chapter *Safety instructions*. Ignoring the instructions can cause physical injury or death, or damage to the equipment.

1. Disconnect the drive from the power line.
2. Open the door and remove the lower shroud of the cubicle.
3. Unplug the fan power supply.
4. Lift the back part of the fan up a bit and remove the two screws that fasten the collar to the cubicle. Pull the collar out of the cubicle.
5. Remove the four screws that fasten the fan to the collar.
6. Install a new fan in reverse order.

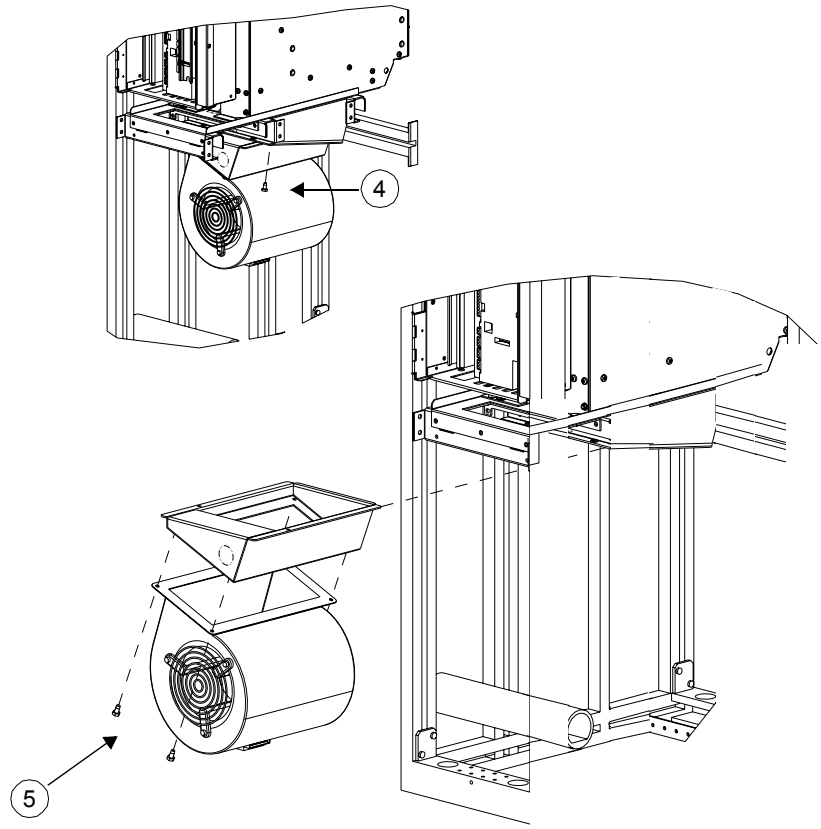

Replacing the inverter module fans (2×R8i and up)

WARNING! Follow the instructions in chapter *Safety instructions*. Ignoring the instructions can cause physical injury or death, or damage to the equipment.

1. Disconnect the drive from the power line.
2. Open the inverter cubicle door and remove the shroud to gain access to the fan.
3. Disconnect the fan wiring plug.
4. Remove the two locking screws.
5. Pull the fan (together with its collar) out along its sliding rails.
6. Remove the two screws that fasten the fan to the support bracket at front.
7. Remove the four screws that fasten the fan to its collar.
8. Install new fan in reverse order.

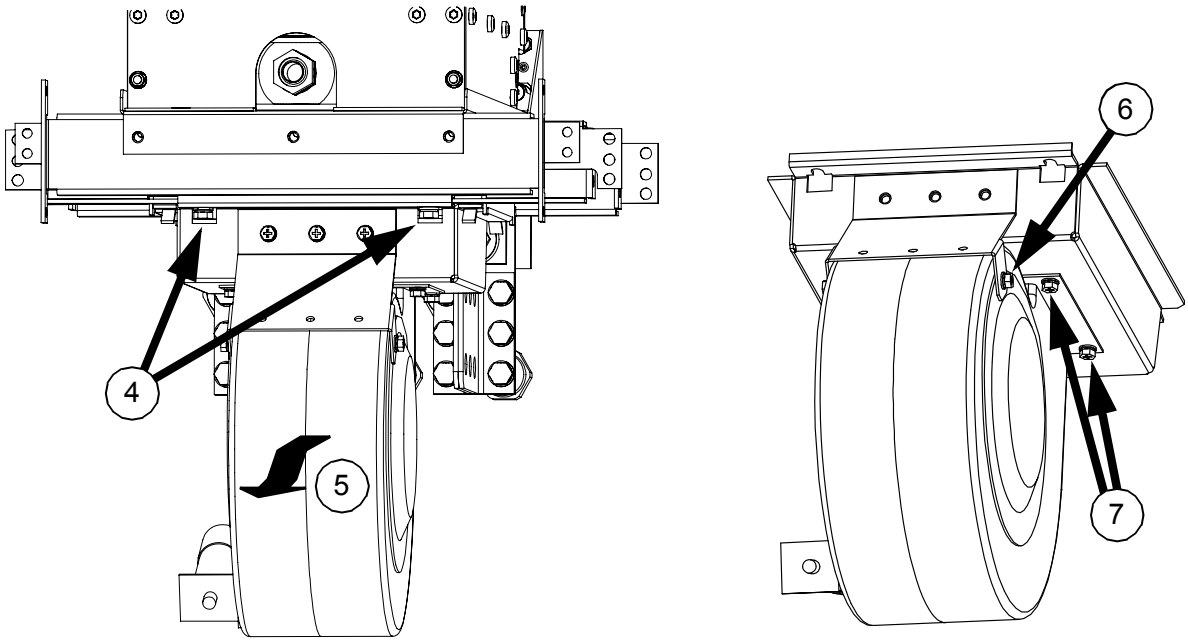

Replacing the additional fan in the common motor terminals cubicle

Replace the fan in the same way as described under *Replacing the auxiliary control cubicle fan (frames 2×R8i+2×R8i and up)* on page *127*.

Reduced run capability

The reduced run capability is available for units with parallel-connected inverter modules of frame sizes 2×R8i and up, and for parallel-connected IGBT supply modules of frame sizes 4×R8i and up. If one of the parallel-connected inverter or supply modules fails, the unit can continue to be run at reduced power using the remaining modules.

Replacing supply and inverter modules

Note: Performing this action requires the following accessories that are not included with the drive as standard:
• Winch (order code: 68847826)
• Installation stand (order code: 68847711).

WARNING! Follow the instructions in chapter *Safety instructions*. Ignoring the instructions can cause physical injury or death, or damage to the equipment.

WARNING! When re-attaching coolant hoses, do not overtighten the outer nuts of the unions – leave 2 to 3 mm of thread visible. Overtightening will break the hose.

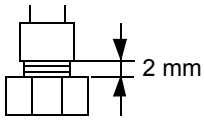

1. Disconnect the drive from the power line.
2. Open the module cubicle door and remove the shroud to gain access to the fan.
3. Close the inlet (a) and outlet (b) valves of the cubicle, and drain the cooling circuit (see *Draining the internal cooling circuit* on page *144*. **Note:** Drain (d) and bleed (c) valves have locking handles. Release the mechanism before turning.
4. Fasten the right-hand side support of the winch to the support frame of the cubicle (four bolts). Fasten the left-hand side support of the winch to the support frame of the cubicle (four bolts). **Note:** Position the guide pins of the supports in the holes of the cabinet frame before tightening the bolts. For detailed instructions see *Installing the winch* on page *136*.
5. Install the winch: Lead the crossbeam through the left and right winch support and the winch body. Lock the crossbeam with two locking pins (a).
6. Open the swing-out frame: two screws on the left-hand side, two on the right.
7. Open the locking of the auxiliary hinge of the swing out frame to allow the frame to open fully: one screw on top (a), one on bottom (b).
8. Decouple the cooling circuit inlet pipe from the module: Unscrew the locking nut until fully open and pull the pipe out.
9. Decouple the cooling circuit outlet pipe from the module: Unscrew the locking nut until fully open and pull the pipe out.

2 *Removing the shrouds*

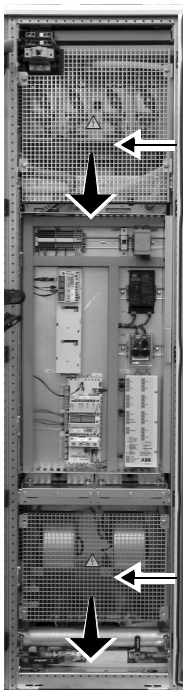

3 *Draining the cooling unit*

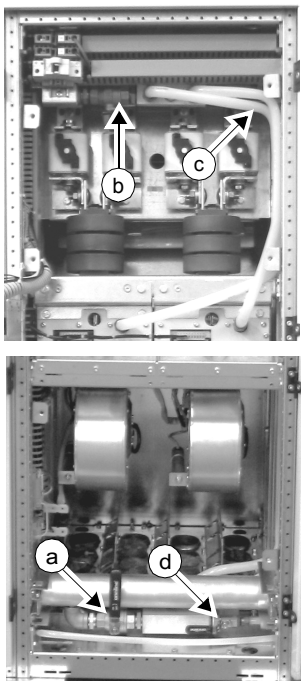

4 *Fastening the supports of the winch*

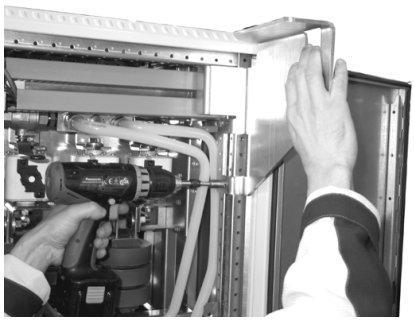

5 *Installing the winch*

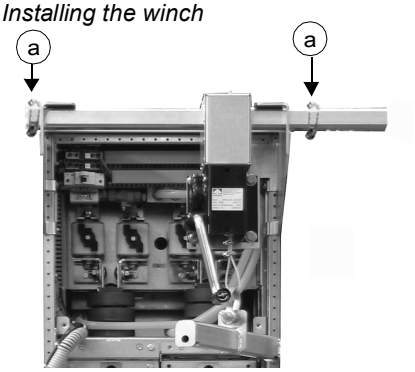

6 *Opening the swing-out frame*

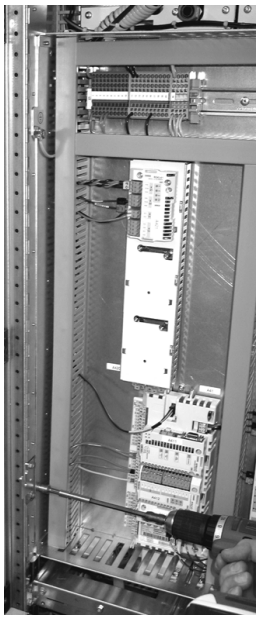

7 *Opening the locking*

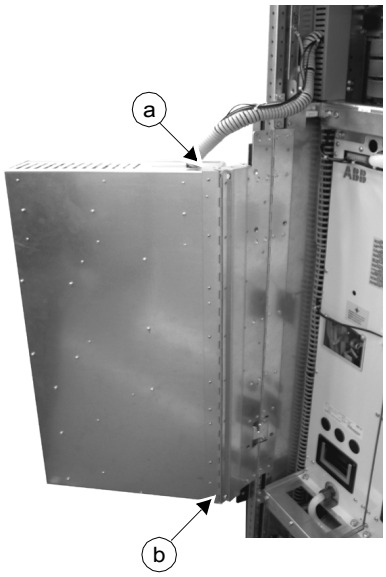

8 9 *Decoupling the inlet (8) and outlet (9)*

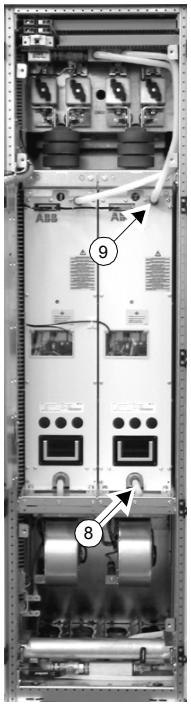

10. Unplug the fiber optic cable from the module.
11. Unplug the terminal block from the module.
12. Remove the module mounting screws (four at top, two at bottom).
13. Disconnect the DC output busbars from the module. Beware not to drop the screws inside the module!
14. Assemble the module installation stand. See *Installing the installation stand* on page *137*. Pay attention to the width: Select the right braces to match the width of the stand to the width of the cubicle.
15. Fasten the module installation stand to the frame of the cubicle (2 × 5 screws). Align the stand and the rails on which the module lies on in the cubicle. Adjust the height of the feet. **Note:** Remove the cabinet hinge first if necessary.



WARNING! The feet must lean on a solid floor. The cubicle may topple over when the heavy module is pulled out if the stand is not supported properly.

---

16. Fasten the lifting bar of the winch to the two module lifting holes.



WARNING! Before fastening the lifting bar, always ensure that the lifting cable is tightly wound on the drum of the winch. A slack cable may slip, making the lifting of a heavy module unstable. A swinging or falling module may cause damage, injury or even death. See *section Use of the hand-operated winch (page 18)* for more detailed information on safe use of the winch.

---

17. Pull the module out of cubicle onto the installation stand. Keep the pipes and wires away from the sharp edges.
18. Winch the module up.
19. Remove the module installation stand.
20. Winch the module down and lay it on a pallet.



WARNING! The module is heavy and its centre of gravity is high. The module topples over easily. Never manoeuvre it in upright position untied. It is highly recommended to lay the module on its side before moving the pallet.

---

21. Move the pallet with the module aside.
22. Before installing a new module, check and service the quick connector through which the AC output busbars or the cubicle connect to the module:
    - Check the tightness of the motor cable connections at the quick connector: 70 N·m (52 lbf·ft).
    - Clean all contact surfaces of the quick connector and apply a layer of suitable joint compound eg, Isoflex® Topas NB 52 from Klüber Lubrication, onto them.
23. Install new module in reverse order.

(10) *Unplugging the fiber optic cables*

(11) *Unplugging the terminal block*

(12) *Removing the mounting screws*

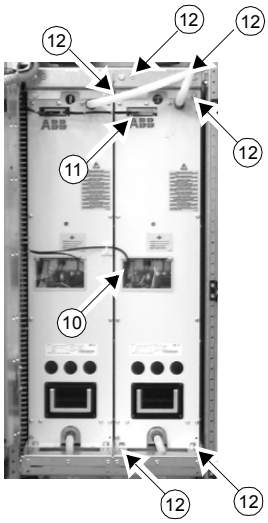

(13) *Disconnecting the DC busbars*

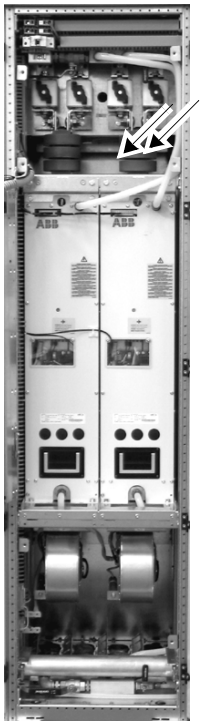

(14) *Fastening the installation stand*

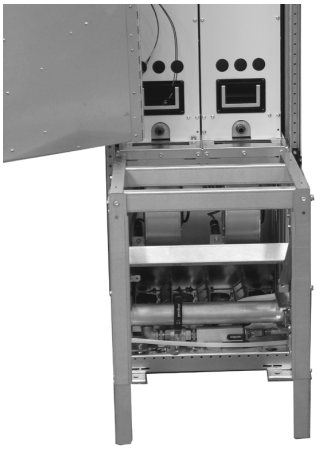

(15) *Pulling the module out*



(16) *Fastening the lifting bar*



(18) *Winching the module up*



(19) *Removing the installation stand*



(20) *Winching the module down*



Installing the winch

The winch is available from ABB as an accessory. The order code is 68847826.

1. Fasten the right-hand side support of the winch to the support frame of the cubicle (four screws). Fasten the left-hand side support of the winch to the support frame of the cubicle (four screws). **Note:** Position the guide pins of the supports in the holes of the cabinet frame before tightening the screws.
2. Lead the beam (a) through the left and right winch support and the winch body. Lock the beam with two locking pins (b).

WARNING! Before fastening the lifting bar to the module, always ensure that the lifting cable is tightly wound on the drum of the winch. A slack cable may slip, making the lifting of a heavy module unstable. A swinging or falling module may cause damage, injury or even death. See page *18* for detailed information on safe use of the winch.

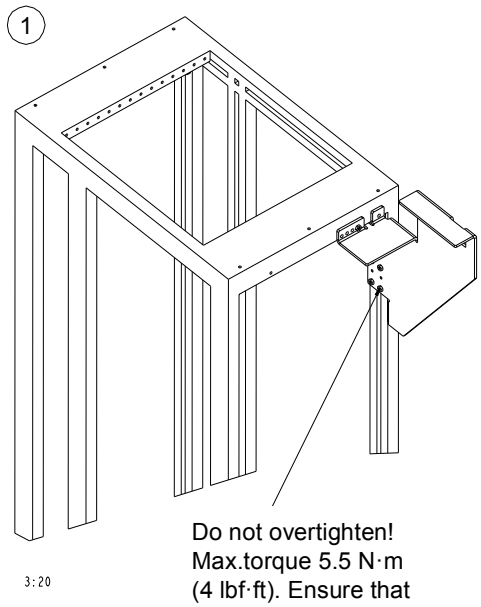

Do not overtighten! Max.torque 5.5 N·m (4 lbf·ft). Ensure that the studs are inserted into frame holes when tightening the screws.

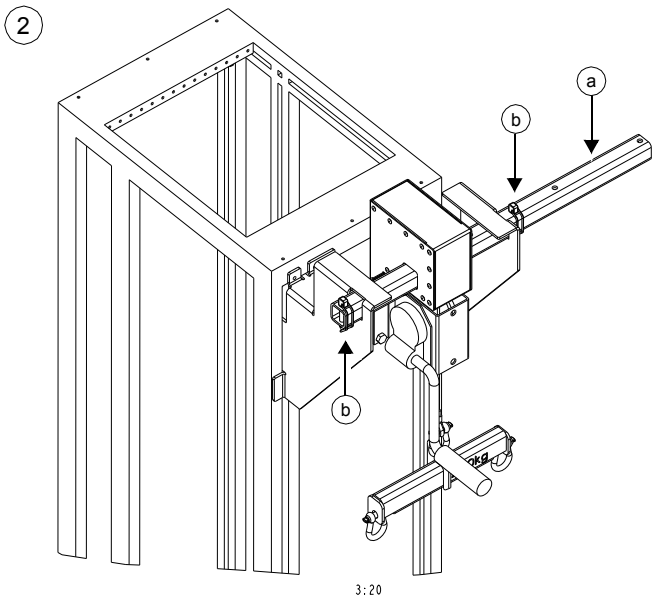

Installing the installation stand

An installation stand for supply and inverter module replacement is available from ABB as an accessory. The order code is 68847711.

1. Fasten the module installation stand to the frame of the cubicle (2 × 5 screws). Align the stand and the rails in the cubicle on which the module lies. Adjust the height of the feet. **Note:** Remove the cabinet hinge first if necessary.

WARNING! The feet must lean on a solid floor. The cubicle may topple over when the heavy module is pulled out if the stand is not supported properly.

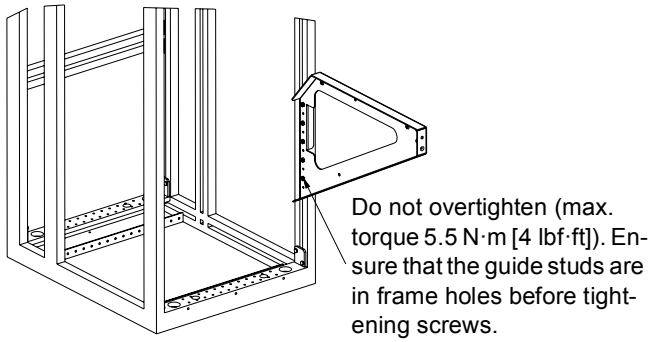

Fixing of triangular support

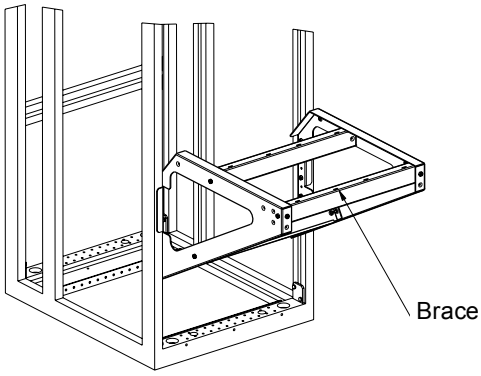

Fixing of braces

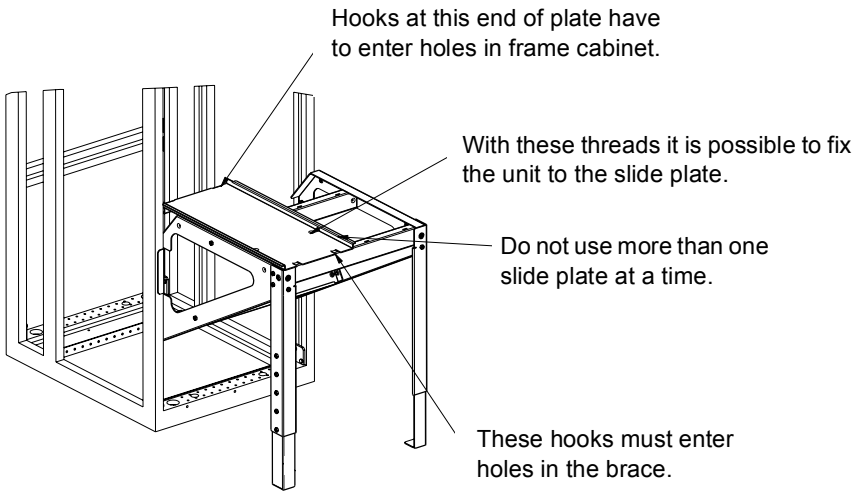

Slide plane and support feet

Capacitors

The converter modules employ several electrolytic capacitors. Their lifespan depends on the operating time of the drive, loading and ambient temperature. Capacitor life can be prolonged by lowering the ambient temperature.

It is not possible to predict capacitor failure. Capacitor failure is usually followed by damage to the unit and an input cable fuse failure, or a fault trip. Contact ABB if capacitor failure is suspected.

Reforming the capacitors

Reform (re-age) spare part capacitors once a year according to *Capacitor reforming instructions* (64059629 [English], available through your local ABB representative.

Replacing the capacitors

Contact an ABB service representative.

Control panel

Cleaning the control panel

Clean the control panel with a damp cloth. Do not use solvents or abrasives.

Replacing the PPCS branching unit (APBU-xx) memory backup battery

1. Switch off the power to the unit.
2. Open the screws on the cover (3 pcs).
3. Slide off the cover.
4. Remove the battery.
5. Insert the new CR 2032 battery and reattach the cover.

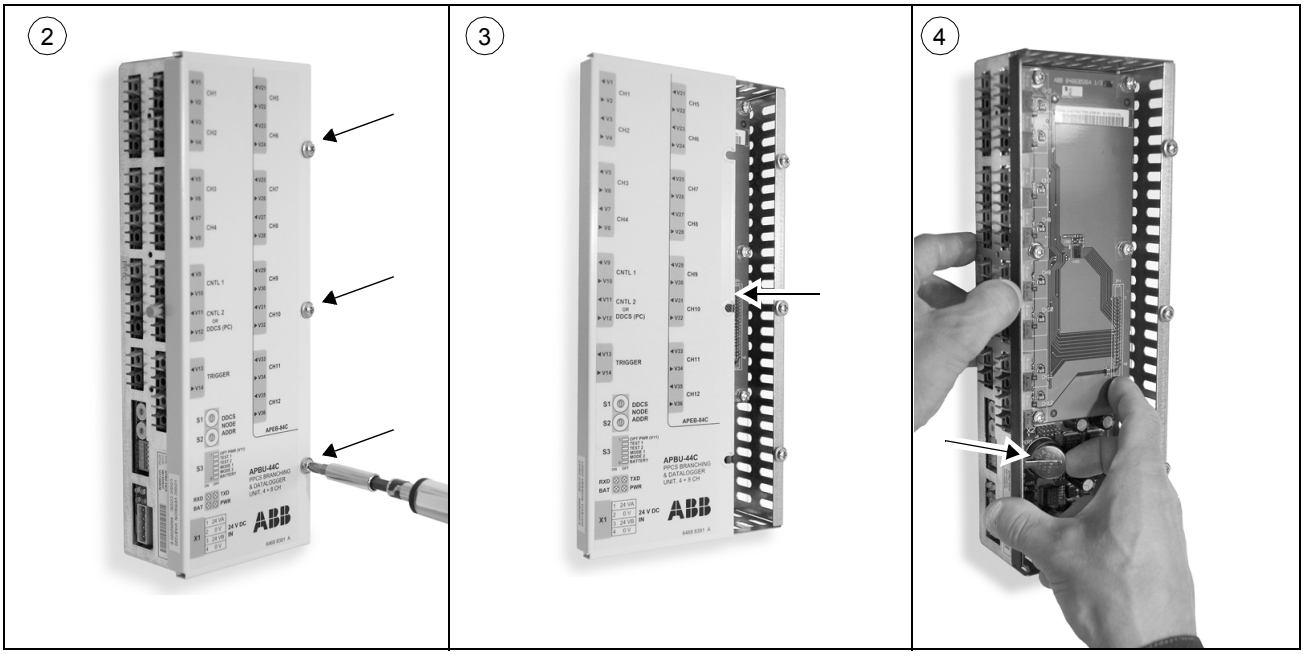

Internal cooling circuit

General

The cooling system of the drive consists of two circuits: firstly, the internal cooling circuit that covers the heat-generating electrical components and transfers the heat to the cooling unit, and the external cooling circuit that is usually part of a larger external cooling system. This chapter deals with the internal cooling circuit.

Internal cooling system diagram

The following is a diagram of how the coolant circulates in the supply, inverter and brake units of a drive system.

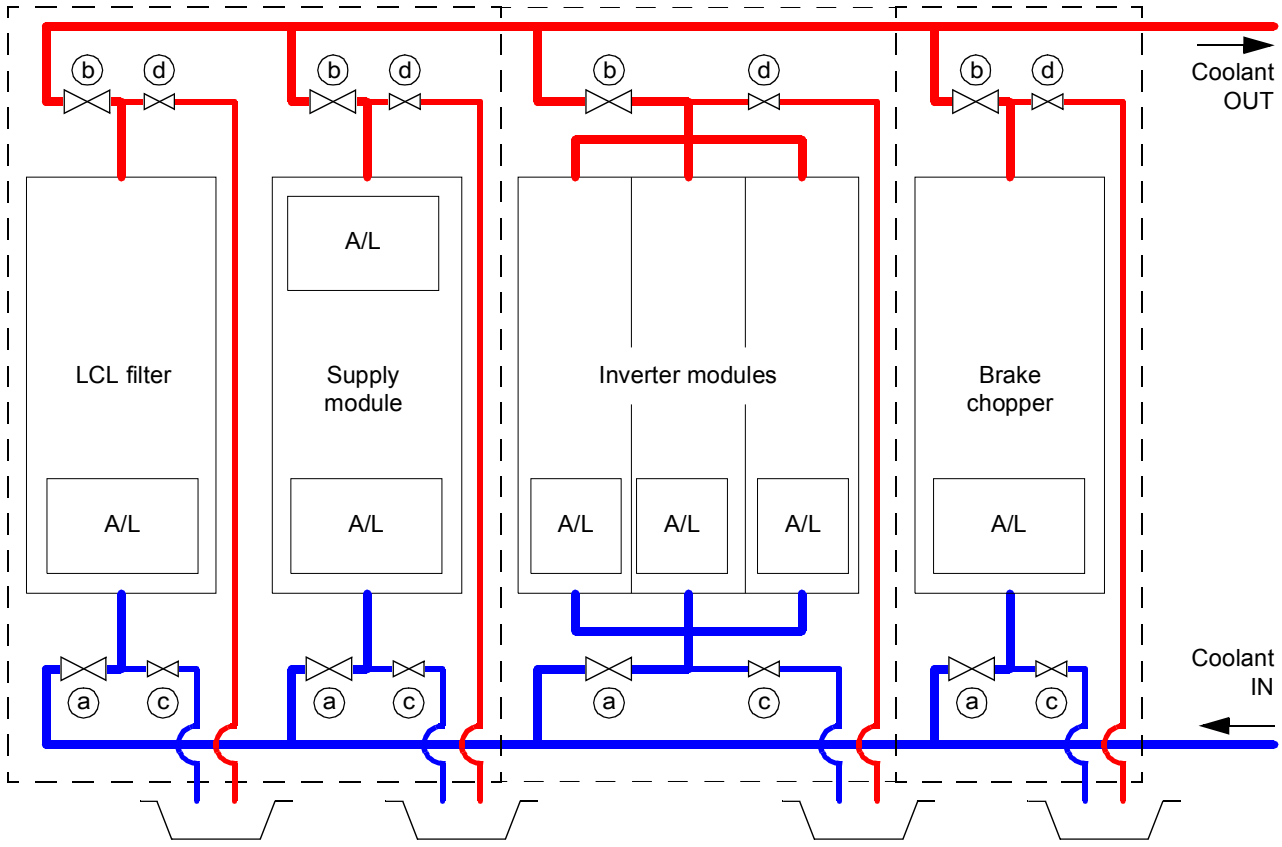

A/L = Air to liquid heat exchanger

The modules in each cubicle can be isolated from the main cooling circuit by closing the inlet (a) and outlet valves (b). Each cubicle is also equipped with a drain valve (c) and a bleed valve (d).

Connection to a cooling unit

Connection to an ACS800-1007LC cooling unit

Refer to the *ACS800-1007LC Cooling Unit User's Manual* (3AFE68621101, English).

Connection to a custom cooling unit

General requirements

Equip the system with an expansion tank to damp pressure rise due to volume changes when the temperature varies. Keep the pressure within the limits specified in *Specifications* below. Install a pressure regulator to ensure that the maximum permissible operating pressure is not exceeded.

Install a bleed valve at the highest point of the cooling circuit.

The materials used in the cooling system are listed in *Specifications* on page *145*.

Coolant temperature control

The temperature of the coolant in the internal cooling circuit must be kept within the limits specified in *Specifications* on page *145*. Note that the minimum temperature is dependent on ambient temperature and relative humidity.

The following diagram shows an example of coolant temperature control using the three-way valve in the external cooling circuit. Part of the infeed coolant flow is directed into the return pipe through a three-way valve without letting it circulate in heat exchanger if the coolant in the internal circuit is too cold.

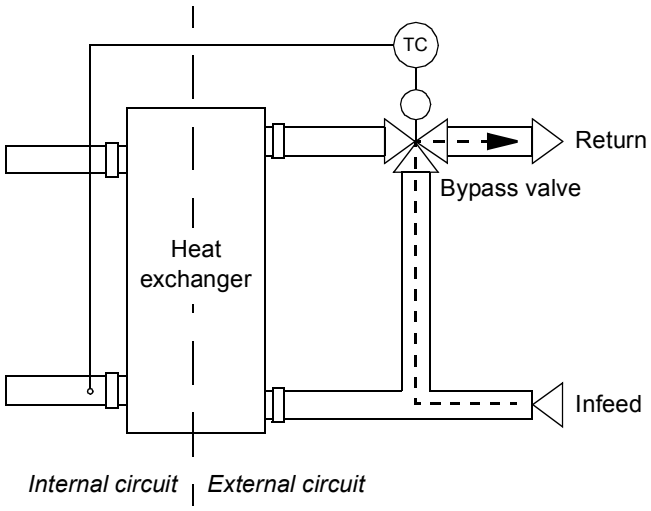

Installation

Lay liquid piping with extreme care. Secure the pipes properly mechanically and check for leaks.

Filling up and bleeding the internal cooling circuit

Both the drive and coolant must be at room temperature before filling in the cooling circuit.



WARNING! Ensure that the maximum permissible operating pressure is not exceeded. When necessary regulate the pressure to appropriate level by draining excess coolant out of the system.



WARNING! Bleeding of the cooling circuit is very important and has to be done with great care. Air bubbles in the cooling circuit may reduce or completely block coolant flow and lead to overheating. Let the air out of the cooling system while filling in coolant and, e.g. after any power module replacements.

Drive line-ups with an ACS800-1007LC cooling unit

Follow the filling up and bleeding instructions in *ACS800-1007LC Cooling Unit User's Manual* (3AFE68621101 [English]).

Drive line-ups with a custom cooling unit

Notes:

- The bleed valves in the line-up are used only to vent the air from the circuit so that it can be displaced by the coolant. The actual bleeding of the circuit must be done via an external bleed valve installed at the highest point of the cooling circuit. The most practical location for the valve is usually near or at the cooling unit.
- Observe the instructions given by the manufacturer of the cooling unit. Pay special attention to filling up and bleeding the pumps properly as they may be damaged if operated when dry.
- Draining propylene glycol into the sewer system is not allowed.

1. Open the bleed valve at the cooling unit.
2. Open the inlet, outlet and bleed valves of one drive cubicle.
3. Lead the bleed hoses into buckets or other suitable containers. Extend the standard hoses if necessary.
4. Fill the circuit with coolant. For coolant specification, see below.
5. After the drive unit is filled up, coolant will start flowing from the bleed hose of the drive cubicle. Let some coolant flow out before closing the bleed valve.
6. Close the inlet, outlet and bleed valves of the drive cubicle.
7. Repeat steps 2…6 for all drive cubicles in the line-up.
8. Open the inlet and outlet valves in all drive cubicles. Let any air remaining in the system out through the bleed valve at the cooling unit.
9. Close the bleed valve at the cooling unit.

10. Continue to fill in coolant until a base pressure of 100…150 kPa is achieved.
11. Open the bleed valve of the pump to allow any air out.
12. Re-check the pressure and add coolant if necessary.
13. Start the coolant pump. Let any air remaining in the system out through the bleed valve at the cooling unit.
14. After one to two minutes, stop the pump or block the coolant flow with a valve.
15. Re-check the pressure and add coolant if necessary.
16. Repeat steps 13 to 15 a few times until all air is let out of the cooling circuit. Listen for a humming sound and/or feel the piping for vibration to find out if there is still air left in the circuit.

Draining the internal cooling circuit

The internal cooling circuit can be drained through the drain valves in each cubicle. The power modules in any cubicle can be drained without draining the whole internal cooling circuit.



WARNING! High-pressure warm coolant may be present in the internal cooling circuit. No work on the cooling circuit is allowed until the pressure is lowered down by stopping the pumps and draining coolant.

1. Lead the bleed and drain hoses to buckets or other suitable containers. Extend the standard hoses if necessary.

Note: Draining propylene glycol into the sewer system is not allowed.

2. Open the bleed valves to let air displace the liquid.
3. If required, dry the piping with compressed oil-free air of less than 6 bar.
4. If the drive is to be stored in temperatures below 0 °C (32 °F),
   • dry the cooling circuit with air
   • fill the cooling circuit with a mixture of water, corrosion inhibitor and DOW Propylene Glycol according to *Freeze protection and corrosion inhibition* below.
   • drain the cooling circuit again.

Adding inhibitor

Add inhibitor in the internal circuit every second year. The amount to be added is 0.5% of the total coolant quantity in the circuit. Use e.g. Cortec VpCI-649 (by Cortec Corporation, www.cortecvci.com).

Specifications

Temperature limits

Ambient temperature: See chapter *Technical data*.

Minimum coolant inlet temperature: Condensation is not allowed. The minimum coolant temperature to avoid condensation (at an atmospheric pressure of 1 bar) is shown below as a function of the relative humidity (ϕ) and the ambient temperature (T_{air}).

T_{air} (°C)	Min. $T_{coolant}$ (°C)				
	ϕ = 95%	ϕ = 80%	ϕ = 65%	ϕ = 50%	ϕ = 40%
5	4.3	1.9	-0.9	-4.5	-7.4
10	9.2	6.7	3.7	-0.1	-3.0
15	14.2	11.5	8.4	4.6	1.5
20	19.2	16.5	13.2	9.4	6.0
25	24.1	21.4	17.9	13.8	10.5
30	29.1	26.2	22.7	18.4	15.0
35	34.1	31.1	27.4	23.0	19.4
40	39.0	35.9	32.2	27.6	23.8
45	44.0	40.8	36.8	32.1	28.2
50	49.0	45.6	41.6	36.7	32.8
55	53.9	50.4	46.3	42.2	37.1

Not allowed as standard but the coolant temperature must be 5 °C or above. Consult an ABB representative if operation below coolant temperature 5 °C is required.

Example: At an air temperature of 45 °C and relative humidity of 65% the coolant temperature may not be below +36.8 °C

Maximum coolant inlet temperature for the drive

Drive with the optional liquid cooling unit (+C140 or +C141):

- 38 °C when the drive output capacity is not derated
- 38 °C … 45 °C when the drive output capacity is derated by 1% per 1 °C temperature increase.

Drive without the optional liquid cooling unit:

- 42 °C when the drive output capacity is not derated
- 42 °C … 48 °C when the drive output capacity is derated by 1% per 1 °C temperature increase.

Maximum inlet temperature variation: ±4°C

Maximum temperature rise: 13 °C; depends on mass flow.

Pressure limits

Base pressure: 100…150 kPa (recommended); 200 kPa (maximum). “Base pressure” denotes the pressure of the system compared with the atmospheric pressure when the cooling circuit is filled with coolant.

Air counterpressure in the expansion tank: 40 kPa

Maximum design pressure: 600 kPa

Minimum pressure difference: 100 kPa / 120 kPa (hydrostatic)

Maximum pressure difference: 250 kPa

Water quality

Tap water The use of tap water is allowed as follows. Tap water must fulfil the requirements of the Council Directive 98/83/EC of 3/11/98 on the quality of water intended for human consumption. Corrosion inhibition with 0.5% by volume Cortec VCI-649 is required.	
pH value	6…9
Chloride	< 50 mg/l
Sulphate	< 100 mg/l
Total dissolved solids	< 200 mg/l, no deposits are allowed at the temperature of +57 °C
Total hardness as $CaCO_3$	< 250 mg/l
Conductivity	< 400 µS/cm (this equals the resistance of > 2500 ohm/cm)
The water must be clean of solid matter.	

Freeze protection and corrosion inhibition

A water-glycol solution is allowed for freeze protection. The glycol must be pure Dow Propylene Glycol (CAS Number: 57-55-6, available from The Dow Chemical Company, *www.dow.com)*.

Add inhibitor to the coolant every second year. The amount to be added is 0.5% of the total coolant quantity in the circuit. Use, for example, Cortec VCI-649 (by Cortec Corporation, *www.cortecvci.com)*.

Glycol concentration

The graph below shows the required glycol concentration in weight percentage according to ambient/storage temperature *T*.

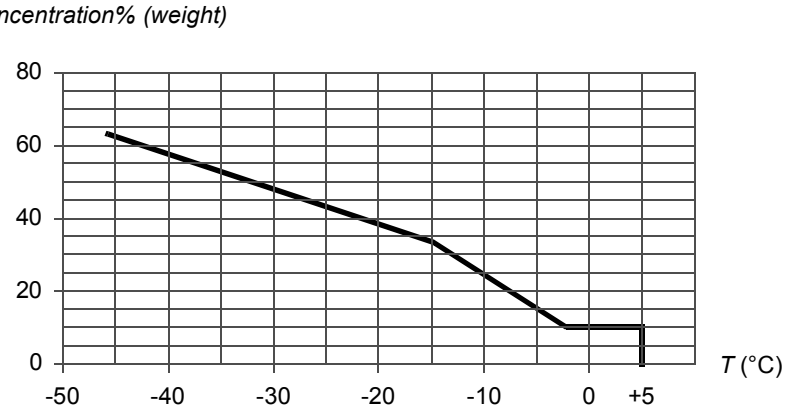

WARNING! Operation at temperatures below 0 °C (32 °F) is not permitted even with antifreeze.

Note: If more than 25% or DOW Propylene Glycol is added, the pressure loss in the system increases. An operating pressure of more than 150 kPa is required for sufficient flow.

Materials

Materials used in the internal cooling circuit are listed below. **Note:** These are also the only materials that can be used in the external cooling circuit.

- stainless steel AISI 316L (UNS 31603)
- heavy gauge aluminium
- plastic materials such as PA, PEX and PTFE
  Note: PVC hoses are not suitable for use with antifreeze.
- rubber gasketing NBR (nitrile rubber).

WARNING! If connecting external piping to the internal cooling circuit, use only materials that are specified above. Copper and brass must not be used under any circumstances. Even minor dissolution of copper can cause copper precipitation on aluminium and subsequent galvanic corrosion. The liquid cooling system may not contain any zinc eg, galvanized pipes, at all since zinc would react with the inhibitor.

If the plant incorporates normal iron pipes or cast iron accessories eg, motor housings, a liquid cooling unit with a heat exchanger (such as the ACS800-1007LC) must be used to separate the systems.

Technical data

What this chapter contains

This chapter contains the technical specifications of the drive eg, ratings, frame sizes and technical requirements, provisions for fulfilling the requirements for CE and other markings, and warranty information.

Ratings

The rating for the drive with a 50 Hz supply are given below. The symbols are defined below the table.

Drive type	Nominal ratings		No-overload use	Light-overload use		Heavy-duty use	
	$I_{cont.max}$	I_{max}	$P_{contmax}$	I_{2N}	P_N	I_{2hd}	P_{hd}
	A (AC)	A	kW	A	kW	A	kW
U_N = 400 V							
ACS800-37LC-0110-3	159	251	90	153	90	119	55
ACS800-37LC-0140-3	205	251	110	197	110	153	75
ACS800-37LC-0170-3	240	335	132	230	132	180	90
ACS800-37LC-0200-3	295	437	160	283	160	221	132
ACS800-37LC-0260-3	377	512	200	362	200	282	160
ACS800-37LC-0350-3	500	674	250	480	250	374	200
ACS800-37LC-0430-3	625	837	355	600	355	468	250
ACS800-37LC-0580-3	835	1037	500	802	450	625	355
ACS800-37LC-0870-3	1250	1590	710	1200	710	935	500
ACS800-37LC-1130-3	1635	1994	900	1570	900	1223	710
ACS800-37LC-1680-3	2430	2941	1400	2333	1400	1818	1000
ACS800-37LC-2220-3	3210	3906	1800	3082	1800	2401	1400
ACS800-37LC-3300-3	4765	5799	2800	4574	2400	3564	2000
U_N = 500 V							
ACS800-37LC-0120-5	139	232	90	133	75	104	55
ACS800-37LC-0170-5	191	252	132	183	110	143	90
ACS800-37LC-0210-5	238	335	160	228	160	178	110
ACS800-37LC-0250-5	290	430	200	278	160	217	132
ACS800-37LC-0310-5	355	515	200	341	200	266	160
ACS800-37LC-0410-5	475	673	315	456	315	355	200
ACS800-37LC-0520-5	595	838	400	571	400	445	315
ACS800-37LC-0690-5	795	1042	560	763	500	595	400
ACS800-37LC-1030-5	1190	1589	800	1142	800	890	630
ACS800-37LC-1350-5	1560	1996	1000	1498	1000	1167	800
ACS800-37LC-2000-5	2310	2943	1600	2218	1600	1728	1200
ACS800-37LC-2640-5	3050	3885	2000	2928	2000	2281	1600
ACS800-37LC-3930-5	4540	5801	3200	4358	3200	3396	2800

Drive type	Nominal ratings		No-overload use	Light-overload use		Heavy-duty use	
	$I_{cont.max}$	I_{max}	$P_{contmax}$	I_{2N}	P_N	I_{2hd}	P_{hd}
	A (AC)	A	kW	A	kW	A	kW
U_N = 690 V							
ACS800-37LC-0130-7	106	137	110	102	90	79	75
ACS800-37LC-0170-7	139	206	132	133	132	104	90
ACS800-37LC-0210-7	179	265	200	172	160	134	132
ACS800-37LC-0280-7	237	386	250	228	200	177	160
ACS800-37LC-0390-7	330	604	315	317	315	247	250
ACS800-37LC-0470-7	395	604	400	379	355	295	250
ACS800-37LC-0630-7	530	872	560	509	500	396	400
ACS800-37LC-0950-7	795	1344	800	763	710	595	630
ACS800-37LC-1240-7	1040	1710	1000	998	1000	778	800
ACS800-37LC-1840-7	1540	2538	1600	1478	1400	1152	1200
ACS800-37LC-2430-7	2035	3350	2000	1954	2000	1522	1600
ACS800-37LC-3620-7	3025	4974	3200	2904	2800	2263	2400
ACS800-37LC-4630-7	3878	5802	4000	3723	3600	2901	2800
ACS800-37LC-5300-7	4432	6630	4400	4255	4000	3315	3200
ACS800-37LC-5960-7	4986	7460	5200	4787	4800	3730	3600

PDM 00430970

Definitions

Nominal ratings

$I_{cont.max}$ Continuous rms output current. No overloadability at 45 °C (113 °F).

I_{max} Maximum output current. Allowable for 10 seconds at start, otherwise as long as allowed by drive temperature.

Typical ratings for no-overload use

$P_{cont.max}$ Typical motor power. The power ratings apply to most IEC 60034 motors at nominal voltage (400, 500 or 690 V).

Typical ratings for light-overload use (10% overloadability)

I_{2N} Continuous rms current. 10% overload is allowed for 1 minute every 5 minutes.

P_N Typical motor power. The power ratings apply to most IEC 60034 motors at nominal voltage (400, 500 or 690 V).

Typical ratings for heavy-duty use (50% overloadability)

I_{2hd} Continuous rms current. 50% overload is allowed for 1 minute every 5 minutes.

P_{hd} Typical motor power. The power ratings apply to most IEC 60034 motors at nominal voltage (400, 500 or 690 V).

Derating

The load capacity (current and power) decreases if the installation site altitude exceeds 1000 metres (3281 ft), or if the ambient temperature exceeds +45 °C (+113 °F).

Temperature derating

In the temperature range +45 °C (+113 °F) to +55 °C (+131 °F), the rated output current is decreased by 0.5% for every additional 1 °C (1.8 °F). The output current is calculated by multiplying the current given in the rating table by the derating factor.

Example If the ambient temperature is 55 °C (+131 °F), the derating factor is 100% - 0.5 $\frac{\%}{°C}$ · 10 °C = 95% or 0.95. The output current is then 0.95 × I_{2N} or 0.95 × $I_{cont.max}$.

Altitude derating

At altitudes from 1000 to 4000 m (3281 to 13123 ft) above sea level, the derating is 1% for every 100 m (328 ft). For a more accurate derating, use the DriveSize PC tool. If the installation site is higher than 2000 m (6600 ft) above sea level, please contact your local ABB distributor or office for further information.

Type equivalence table

Drive type	Frame sizes (supply + inverter)	Supply modules		Inverter modules	
		Qty	Type	Qty	Type
U_N = 400 V					
ACS800-37LC-0110-3	R7i+R7i	1	ACS800-104LC-0120-3	1	ACS800-104LC-0120-3
ACS800-37LC-0140-3	R7i+R7i	1	ACS800-104LC-0150-3	1	ACS800-104LC-0150-3
ACS800-37LC-0170-3	R7i+R7i	1	ACS800-104LC-0170-3	1	ACS800-104LC-0170-3
ACS800-37LC-0200-3	R7i+R7i	1	ACS800-104LC-0210-3	1	ACS800-104LC-0210-3
ACS800-37LC-0260-3	R8i+R8i	1	ACS800-104LC-0310-3+E205	1	ACS800-104LC-0310-3+E205
ACS800-37LC-0350-3	R8i+R8i	1	ACS800-104LC-0390-3+E205	1	ACS800-104LC-0390-3+E205
ACS800-37LC-0430-3	R8i+R8i	1	ACS800-104LC-0470-3+E205	1	ACS800-104LC-0470-3+E205
ACS800-37LC-0580-3	R8i+R8i	1	ACS800-104LC-0620-3+E205	1	ACS800-104LC-0620-3+E205
ACS800-37LC-0870-3	2×R8i+2×R8i	2	ACS800-104LC-0470-3+E205	2	ACS800-104LC-0470-3+E205
ACS800-37LC-1130-3	2×R8i+2×R8i	2	ACS800-104LC-0620-3+E205	2	ACS800-104LC-0620-3+E205
ACS800-37LC-1680-3	3×R8i+3×R8i	3	ACS800-104LC-0620-3+E205	3	ACS800-104LC-0620-3+E205
ACS800-37LC-2220-3	4×R8i+4×R8i	4	ACS800-104LC-0620-3+E205	4	ACS800-104LC-0620-3+E205
ACS800-37LC-3300-3	6×R8i+6×R8i	6	ACS800-104LC-0620-3+E205	6	ACS800-104LC-0620-3+E205
U_N = 500 V					
ACS800-37LC-0120-5	R7i+R7i	1	ACS800-104LC-0140-5	1	ACS800-104LC-0140-5
ACS800-37LC-0170-5	R7i+R7i	1	ACS800-104LC-0170-5	1	ACS800-104LC-0170-5
ACS800-37LC-0210-5	R7i+R7i	1	ACS800-104LC-0220-5	1	ACS800-104LC-0220-5
ACS800-37LC-0250-5	R7i+R7i	1	ACS800-104LC-0260-5	1	ACS800-104LC-0260-5
ACS800-37LC-0310-5	R8i+R8i	1	ACS800-104LC-0380-5+E205	1	ACS800-104LC-0380-5+E205
ACS800-37LC-0410-5	R8i+R8i	1	ACS800-104LC-0470-5+E205	1	ACS800-104LC-0470-5+E205
ACS800-37LC-0520-5	R8i+R8i	1	ACS800-104LC-0550-5+E205	1	ACS800-104LC-0550-5+E205
ACS800-37LC-0690-5	R8i+R8i	1	ACS800-104LC-0730-5+E205	1	ACS800-104LC-0730-5+E205
ACS800-37LC-1030-5	2×R8i+2×R8i	2	ACS800-104LC-0550-5+E205	2	ACS800-104LC-0550-5+E205
ACS800-37LC-1350-5	2×R8i+2×R8i	2	ACS800-104LC-0730-5+E205	2	ACS800-104LC-0730-5+E205
ACS800-37LC-2000-5	3×R8i+3×R8i	3	ACS800-104LC-0730-5+E205	3	ACS800-104LC-0730-5+E205
ACS800-37LC-2640-5	4×R8i+4×R8i	4	ACS800-104LC-0730-5+E205	4	ACS800-104LC-0730-5+E205
ACS800-37LC-3930-5	6×R8i+6×R8i	6	ACS800-104LC-0730-5+E205	6	ACS800-104LC-0730-5+E205

Drive type	Frame sizes (supply + inverter)	Supply modules		Inverter modules	
		Qty	Type	Qty	Type
U_N = 690 V					
ACS800-37LC-0130-7	R7i+R7i	1	ACS800-104LC-0130-7	1	ACS800-104LC-0130-7
ACS800-37LC-0170-7	R7i+R7i	1	ACS800-104LC-0190-7	1	ACS800-104LC-0190-7
ACS800-37LC-0210-7	R7i+R7i	1	ACS800-104LC-0240-7	1	ACS800-104LC-0240-7
ACS800-37LC-0280-7	R8i+R8i	1	ACS800-104LC-0310-7+E205	1	ACS800-104LC-0310-7+E205
ACS800-37LC-0390-7	R8i+R8i	1	ACS800-104LC-0480-7+E205	1	ACS800-104LC-0480-7+E205
ACS800-37LC-0470-7	R8i+R8i	1	ACS800-104LC-0550-7+E205	1	ACS800-104LC-0480-7+E205
ACS800-37LC-0630-7	R8i+R8i	1	ACS800-104LC-0700-7+E205	1	ACS800-104LC-0700-7+E205
ACS800-37LC-0950-7	2×R8i+2×R8i	2	ACS800-104LC-0550-7+E205	2	ACS800-104LC-0550-7+E205
ACS800-37LC-1240-7	2×R8i+2×R8i	2	ACS800-104LC-0700-7+E205	2	ACS800-104LC-0700-7+E205
ACS800-37LC-1840-7	3×R8i+3×R8i	3	ACS800-104LC-0700-7+E205	3	ACS800-104LC-0700-7+E205
ACS800-37LC-2430-7	4×R8i+4×R8i	4	ACS800-104LC-0700-7+E205	4	ACS800-104LC-0700-7+E205
ACS800-37LC-3620-7	6×R8i+6×R8i	6	ACS800-104LC-0700-7+E205	6	ACS800-104LC-0700-7+E205
ACS800-37LC-4630-7	8×R8i+7×R8i	8	ACS800-104LC-0700-7+E205	7	ACS800-104LC-0700-7+E205
ACS800-37LC-5300-7	9×R8i+8×R8i	9	ACS800-104LC-0700-7+E205	8	ACS800-104LC-0700-7+E205
ACS800-37LC-5960-7	10×R8i+9×R8i	10	ACS800-104LC-0700-7+E205	9	ACS800-104LC-0700-7+E205

PDM 00430970

1-phase brake choppers (option +D150) and resistors (option +D151)

Drive type	Brake chopper type	Brake resistors		
		Type	$I_{n\ (rms)}$	Resistor
			A	Ohm
U_N = 690 V				
ACS800-37LC-0130-7	NBRW-669C	SAFUR200F500	107	2.72
ACS800-37LC-0170-7	NBRW-669C	SAFUR200F500	107	2.72
ACS800-37LC-0210-7	NBRW-669C	SAFUR200F500	107	2.72
ACS800-37LC-0280-7	NBRW-669C	SAFUR200F500	107	2.72
ACS800-37LC-0390-7	NBRW-669C	SAFUR200F500	107	2.72
ACS800-37LC-0470-7	NBRW-669C	SAFUR200F500	107	2.72
ACS800-37LC-0630-7	2xNBRW-669C	2xSAFUR200F500	214	1.36
ACS800-37LC-0950-7	-	-	-	-
ACS800-37LC-1240-7	-	-	-	-
ACS800-37LC-1840-7	-	-	-	-
ACS800-37LC-2430-7	-	-	-	-
ACS800-37LC-3620-7	-	-	-	-
ACS800-37LC-4630-7	-	-	-	-
ACS800-37LC-5300-7	-	-	-	-
ACS800-37LC-5960-7	-	-	-	-

3-phase brake units (option +D152)

Drive type	Brake unit type	$I_{DC\ (rms)}$	Resistor	Cubicle width *
		A	Ohm	mm
U_N = 400 V				
ACS800-37LC-0110-3	ACS800-607LC-0250-3	155	3×3.5	400/700
ACS800-37LC-0140-3	ACS800-607LC-0250-3	155	3×3.5	400/700
ACS800-37LC-0170-3	ACS800-607LC-0250-3	155	3×3.5	400/700
ACS800-37LC-0200-3	ACS800-607LC-0250-3	155	3×3.5	400/700
ACS800-37LC-0260-3	ACS800-607LC-0250-3	155	3×3.5	400/700
ACS800-37LC-0350-3	ACS800-607LC-0250-3	155	3×3.5	400/700
ACS800-37LC-0430-3	ACS800-607LC-0500-3	310	3×1.7	400/700
ACS800-37LC-0580-3	ACS800-607LC-0500-3	310	3×1.7	400/700
ACS800-37LC-0870-3	-	-	-	-
ACS800-37LC-1130-3	-	-	-	-
ACS800-37LC-1680-3	-	-	-	-
ACS800-37LC-2220-3	-	-	-	-
ACS800-37LC-3300-3	-	-	-	-
U_N = 500 V				
ACS800-37LC-0120-5	ACS800-607LC-0310-5	155	3×4.3	400/700
ACS800-37LC-0170-5	ACS800-607LC-0310-5	155	3×4.3	400/700
ACS800-37LC-0210-5	ACS800-607LC-0310-5	155	3×4.3	400/700
ACS800-37LC-0250-5	ACS800-607LC-0310-5	155	3×4.3	400/700
ACS800-37LC-0310-5	ACS800-607LC-0310-5	155	3×4.3	400/700
ACS800-37LC-0410-5	ACS800-607LC-0310-5	155	3×4.3	400/700
ACS800-37LC-0520-5	ACS800-607LC-0630-5	310	3×2.2	400/700
ACS800-37LC-0690-5	ACS800-607LC-0630-5	310	3×2.2	400/700
ACS800-37LC-1030-5	-	-	-	-
ACS800-37LC-1350-5	-	-	-	-
ACS800-37LC-2000-5	-	-	-	-
ACS800-37LC-2640-5	-	-	-	-
ACS800-37LC-3930-5	-	-	-	-

Drive type	Brake unit type	$I_{DC\ (rms)}$	Resistor	Cubicle width *
		A	Ohm	mm
U_N = 690 V				
ACS800-37LC-0130-7	ACS800-607LC-0430-7	155	3 × 6	400/700
ACS800-37LC-0170-7	ACS800-607LC-0430-7	155	3 × 6	400/700
ACS800-37LC-0210-7	ACS800-607LC-0430-7	155	3 × 6	400/700
ACS800-37LC-0280-7	ACS800-607LC-0430-7	155	3 × 6	400/700
ACS800-37LC-0390-7	ACS800-607LC-0430-7	155	3 × 6	400/700
ACS800-37LC-0470-7	ACS800-607LC-0430-7	155	3 × 6	400/700
ACS800-37LC-0630-7	ACS800-607LC-0870-7	310	3 × 3	400/700
ACS800-37LC-0950-7	-	-	-	-
ACS800-37LC-1240-7	-	-	-	-
ACS800-37LC-1840-7	-	-	-	-
ACS800-37LC-2430-7	-	-	-	-
ACS800-37LC-3620-7	-	-	-	-
ACS800-37LC-4630-7	-	-	-	-
ACS800-37LC-5300-7	-	-	-	-
ACS800-37LC-5960-7	-	-	-	-

* first value for units wirh bottom exit and second for units with top exit

Fuses

Notes:

- Larger fuses must not be used.
- Fuses from other manufacturers can be used if they meet the ratings.
- The recommended fuses are for branch circuit protection per NEC as required for UL approval.

Main circuit AC fuses

Drive type	Input current	AC fuse information (aR IEC and UL Recognized)		
		Qty	Bussmann	Ferraz Shawmut
U_N = 400 V				
ACS800-37LC-0110-3	144	3	170M4409	-
ACS800-37LC-0140-3	186	3	170M4411	PC31UD69V350TF
ACS800-37LC-0170-3	218	3	170M4411	PC31UD69V350TF
ACS800-37LC-0200-3	269	3	170M4413	PC31UD69V450TF
ACS800-37LC-0260-3	341	3	170M4415	PC31UD69V550TF
ACS800-37LC-0350-3	454	3	170M5413	PC32UD69V700TF
ACS800-37LC-0430-3	567	3	170M5415	PC32UD69V900TF
ACS800-37LC-0580-3	756	3	170M7059	PC33UD69V1250TF
ACS800-37LC-0870-3	1134	3	170M7059	PC33UD69V1250TF
ACS800-37LC-1130-3	1482	3	170M7062	PC44UD75V20CTQ
ACS800-37LC-1680-3	2200	3	170M7063	PC44UD70V25CTQ
ACS800-37LC-2220-3	2903	6	170M7062	PC44UD75V20CTQ
ACS800-37LC-3300-3	4309	6	170M7063	PC44UD70V25CTQ

Drive type	Input current	AC fuse information (aR IEC and UL Recognized)		
		Qty	Bussmann	Ferraz Shawmut
U_N = 500 V				
ACS800-37LC-0120-5	126	3	170M4409	-
ACS800-37LC-0170-5	173	3	170M4411	PC31UD69V350TF
ACS800-37LC-0210-5	216	3	170M4411	PC31UD69V350TF
ACS800-37LC-0250-5	264	3	170M4413	PC31UD69V450TF
ACS800-37LC-0310-5	324	3	170M4415	PC31UD69V550TF
ACS800-37LC-0410-5	432	3	170M5413	PC32UD69V700TF
ACS800-37LC-0520-5	540	3	170M5415	PC32UD69V900TF
ACS800-37LC-0690-5	720	3	170M7059	PC33UD69V1250TF
ACS800-37LC-1030-5	1080	3	170M7059	PC33UD69V1250TF
ACS800-37LC-1350-5	1411	3	170M7062	PC44UD75V20CTQ
ACS800-37LC-2000-5	2095	3	170M7063	PC44UD70V25CTQ
ACS800-37LC-2640-5	2765	6	170M7062	PC44UD75V20CTQ
ACS800-37LC-3930-5	4104	6	170M7063	PC44UD70V25CTQ
U_N = 690 V				
ACS800-37LC-0130-7	96	3	170M4409	-
ACS800-37LC-0170-7	126	3	170M4409	-
ACS800-37LC-0210-7	162	3	170M4409	-
ACS800-37LC-0280-7	216	3	170M4411	PC31UD69V350TF
ACS800-37LC-0390-7	300	3	170M4413	PC31UD69V450TF
ACS800-37LC-0470-7	360	3	170M4415	PC31UD69V550TF
ACS800-37LC-0630-7	480	3	170M5413	PC32UD69V700TF
ACS800-37LC-0950-7	720	3	170M7059	PC33UD69V1250TF
ACS800-37LC-1240-7	941	3	170M7060	PC33UD69V1400TF
ACS800-37LC-1840-7	1397	3	170M7062	PC44UD75V20CTQ
ACS800-37LC-2430-7	1843	6	170M7060	PC33UD69V1400TF
ACS800-37LC-3620-7	2736	6	170M7062	PC44UD75V20CTQ
ACS800-37LC-4630-7	3648	12	170M7060	PC33UD69V1400TF
ACS800-37LC-5300-7	4104	9	170M7062	PC44UD75V20CTQ
ACS800-37LC-5960-7	4560	15	170M7060	PC33UD69V1400TF

Main circuit DC fuses

Drive type	Supply output (IEC and UL Recognized)			Inverter input (IEC and UL Recognized)		
	Qty	Bussmann	Ferraz Shawmut	Qty	Bussmann	Ferraz Shawmut
U_N = 400 V						
ACS800-37LC-0110-3	-	-	-	-	-	-
ACS800-37LC-0140-3	-	-	-	-	-	-
ACS800-37LC-0170-3	-	-	-	-	-	-
ACS800-37LC-0200-3	-	-	-	-	-	-
ACS800-37LC-0260-3	-	-	-	-	-	-
ACS800-37LC-0350-3	-	-	-	-	-	-
ACS800-37LC-0430-3	-	-	-	-	-	-
ACS800-37LC-0580-3	-	-	-	-	-	-
ACS800-37LC-0870-3	4	170M6415	PC33UD69V1100TF	4	170M6415	PC33UD69V1100TF
ACS800-37LC-1130-3	4	170M6419	PC73UD69V1600TF	4	170M6419	PC73UD69V1600TF
ACS800-37LC-1680-3	6	170M6419	PC73UD69V1600TF	6	170M6419	PC73UD69V1600TF
ACS800-37LC-2220-3	8	170M6419	PC73UD69V1600TF	8	170M6419	PC73UD69V1600TF
ACS800-37LC-3300-3	12	170M6419	PC73UD69V1600TF	12	170M6419	PC73UD69V1600TF
U_N = 500 V						
ACS800-37LC-0120-5	-	-	-	-	-	-
ACS800-37LC-0170-5	-	-	-	-	-	-
ACS800-37LC-0210-5	-	-	-	-	-	-
ACS800-37LC-0250-5	-	-	-	-	-	-
ACS800-37LC-0310-5	-	-	-	-	-	-
ACS800-37LC-0410-5	-	-	-	-	-	-
ACS800-37LC-0520-5	-	-	-	-	-	-
ACS800-37LC-0690-5	-	-	-	-	-	-
ACS800-37LC-1030-5	4	170M6415	PC33UD69V1100TF	4	170M6415	PC33UD69V1100TF
ACS800-37LC-1350-5	4	170M6419	PC73UD69V1600TF	4	170M6419	PC73UD69V1600TF
ACS800-37LC-2000-5	6	170M6419	PC73UD69V1600TF	6	170M6419	PC73UD69V1600TF
ACS800-37LC-2640-5	8	170M6419	PC73UD69V1600TF	8	170M6419	PC73UD69V1600TF
ACS800-37LC-3930-5	12	170M6419	PC73UD69V1600TF	12	170M6419	PC73UD69V1600TF

Drive type	Supply output (IEC and UL Recognized)			Inverter input (IEC and UL Recognized)		
	Qty	Bussmann	Ferraz Shawmut	Qty	Bussmann	Ferraz Shawmut
U_N = 690 V						
ACS800-37LC-0130-7	-	-	-	-	-	-
ACS800-37LC-0170-7	-	-	-	-	-	-
ACS800-37LC-0210-7	-	-	-	-	-	-
ACS800-37LC-0280-7	-	-	-	-	-	-
ACS800-37LC-0390-7	-	-	-	-	-	-
ACS800-37LC-0470-7	-	-	-	-	-	-
ACS800-37LC-0630-7	-	-	-	-	-	-
ACS800-37LC-0950-7	4	170M6546	PC73UD13C800TF	4	170M6546	PC73UD13C800TF
ACS800-37LC-1240-7	4	170M6549	PC73UD10C11CTF	4	170M6549	PC73UD10C11CTF
ACS800-37LC-1840-7	6	170M6549	PC73UD10C11CTF	6	170M6549	PC73UD10C11CTF
ACS800-37LC-2430-7	8	170M6549	PC73UD10C11CTF	8	170M6549	PC73UD10C11CTF
ACS800-37LC-3620-7	12	170M6549	PC73UD10C11CTF	12	170M6549	PC73UD10C11CTF
ACS800-37LC-4630-7	16	170M6549	PC73UD10C11CTF	14	170M6549	PC73UD10C11CTF
ACS800-37LC-5300-7	18	170M6549	PC73UD10C11CTF	16	170M6549	PC73UD10C11CTF
ACS800-37LC-5960-7	20	170M6549	PC73UD10C11CTF	18	170M6549	PC73UD10C11CTF

Dimensions, weights and free space requirements

The dimensions of the basic units are given below. See chapter *Dimensions* for the cubicle widths and heights of units with options. 400 mm free space is required at the top of the unit.

Drive type	Height	Width	Depth	Weight
	mm	mm	mm	kg
U_N = 400 V				
ACS800-37LC-0110-3	2003	1200	644	950
ACS800-37LC-0140-3	2003	1200	644	950
ACS800-37LC-0170-3	2003	1200	644	950
ACS800-37LC-0200-3	2003	1200	644	950
ACS800-37LC-0260-3	2003	1200	644	1100
ACS800-37LC-0350-3	2003	1200	644	1100
ACS800-37LC-0430-3	2003	1200	644	1100
ACS800-37LC-0580-3	2003	1200	644	1400
ACS800-37LC-0870-3	2003	1900	644	1950
ACS800-37LC-1130-3	2003	1900	644	1950
ACS800-37LC-1680-3	2003	3100	644	3000
ACS800-37LC-2220-3	2003	3200	644	3350
ACS800-37LC-3300-3	2003	5000	644	4950

Drive type	Height	Width	Depth	Weight
	mm	mm	mm	kg
U_N = 500 V				
ACS800-37LC-0120-5	2003	1200	644	950
ACS800-37LC-0170-5	2003	1200	644	950
ACS800-37LC-0210-5	2003	1200	644	950
ACS800-37LC-0250-5	2003	1200	644	950
ACS800-37LC-0310-5	2003	1200	644	1100
ACS800-37LC-0410-5	2003	1200	644	1100
ACS800-37LC-0520-5	2003	1200	644	1100
ACS800-37LC-0690-5	2003	1200	644	1400
ACS800-37LC-1030-5	2003	1900	644	1950
ACS800-37LC-1350-5	2003	1900	644	1950
ACS800-37LC-2000-5	2003	3100	644	3000
ACS800-37LC-2640-5	2003	3200	644	3350
ACS800-37LC-3930-5	2003	5000	644	4950
U_N = 690 V				
ACS800-37LC-0130-7	2003	1200	644	950
ACS800-37LC-0170-7	2003	1200	644	950
ACS800-37LC-0210-7	2003	1200	644	950
ACS800-37LC-0280-7	2003	1200	644	1100
ACS800-37LC-0390-7	2003	1200	644	1100
ACS800-37LC-0470-7	2003	1200	644	1100
ACS800-37LC-0630-7	2003	1200	644	1100
ACS800-37LC-0950-7	2003	1900	644	1950
ACS800-37LC-1240-7	2003	1900	644	1950
ACS800-37LC-1840-7	2003	2400	644	2350
ACS800-37LC-2430-7	2003	3200	644	3350
ACS800-37LC-3620-7	2003	4200	644	4250
ACS800-37LC-4630-7	2003	6200	644	6150
ACS800-37LC-5300-7	2003	6500	644	6000
ACS800-37LC-5960-7	2003	7400	644	7500

Losses, cooling data and noise

Drive type	Losses			Cooling data			Noise
	P_{loss} (total)	P_{loss} (coolant)	P_{loss} (air)	Coolant quantity	Massflow	Pressure loss	
	kW	kW	kW	l	l/min	kPa	dBA
U_N = 400 V							
ACS800-37LC-0110-3	5.1	5.0	0.1	10.3	41	100	59
ACS800-37LC-0140-3	7.1	7.0	0.1	10.3	41	100	59
ACS800-37LC-0170-3	6.7	6.6	0.1	10.3	41	100	59
ACS800-37LC-0200-3	7.7	7.5	0.1	10.3	41	100	59
ACS800-37LC-0260-3	12.4	12.2	0.2	10.3	41	100	59
ACS800-37LC-0350-3	14.6	14.3	0.3	10.3	41	100	59
ACS800-37LC-0430-3	17.4	17.1	0.3	10.3	41	100	59
ACS800-37LC-0580-3	22.1	21.7	0.4	11.1	41	100	59
ACS800-37LC-0870-3	33.3	32.6	0.7	16.6	79	100	62
ACS800-37LC-1130-3	43.2	42.3	0.9	16.6	79	100	62
ACS800-37LC-1680-3	64.4	63.1	1.3	26.1	116	100	64
ACS800-37LC-2220-3	84.5	82.8	1.7	29.9	152	100	65
ACS800-37LC-3300-3	125.3	122.8	2.5	44.6	226	100	67
U_N = 500 V							
ACS800-37LC-0120-5	4.8	4.7	0.1	10.3	41	100	59
ACS800-37LC-0170-5	6.5	6.4	0.1	10.3	41	100	59
ACS800-37LC-0210-5	7.1	7.0	0.1	10.3	41	100	59
ACS800-37LC-0250-5	8.3	8.2	0.1	10.3	41	100	59
ACS800-37LC-0310-5	12.7	12.4	0.3	10.3	41	100	59
ACS800-37LC-0410-5	14.8	14.5	0.3	10.3	41	100	59
ACS800-37LC-0520-5	17.2	16.9	0.3	10.3	41	100	59
ACS800-37LC-0690-5	21.9	21.4	0.5	11.1	41	100	59
ACS800-37LC-1030-5	32.9	32.2	0.7	16.6	79	100	62
ACS800-37LC-1350-5	42.9	42.0	0.9	16.6	79	100	62
ACS800-37LC-2000-5	64.1	62.8	1.3	26.1	116	100	64
ACS800-37LC-2640-5	84.0	82.0	2.0	29.9	152	100	65
ACS800-37LC-3930-5	124.6	122.1	2.5	44.6	226	100	67

Drive type	Losses			Cooling data			Noise
	P_{loss} (total)	P_{loss} (coolant)	P_{loss} (air)	Coolant quantity	Massflow	Pressure loss	
	kW	kW	kW	l	l/min	kPa	dBA
U_N = 690 V							
ACS800-37LC-0130-7	5.1	5.0	0.1	10.3	41	100	59
ACS800-37LC-0170-7	7.5	7.4	0.1	10.3	41	100	59
ACS800-37LC-0210-7	7.5	7.4	0.1	10.3	41	100	59
ACS800-37LC-0280-7	12.4	12.1	0.3	10.3	41	100	59
ACS800-37LC-0390-7	15.1	14.8	0.3	10.3	41	100	59
ACS800-37LC-0470-7	19.2	18.8	0.4	10.3	41	100	59
ACS800-37LC-0630-7	21.5	21.0	0.5	10.3	41	100	59
ACS800-37LC-0950-7	35.5	34.8	0.7	16.6	70	100	62
ACS800-37LC-1240-7	40.3	39.5	0.8	16.6	79	100	62
ACS800-37LC-1840-7	57.3	56.2	1.1	22.4	116	100	64
ACS800-37LC-2430-7	79.5	77.9	1.6	29.9	152	100	65
ACS800-37LC-3620-7	112.2	110.0	2.2	41.7	226	100	67
ACS800-37LC-4630-7	149.0	146.5	2.5	56.7	291	100	68
ACS800-37LC-5300-7	160.3	157.1	3.2	61.3	329	100	69
ACS800-37LC-5960-7	187.7	184.0	3.7	69.6	364	100	69

Internal cooling circuit data

See chapter *Internal cooling circuit*.

Terminal and lead-through data for the input power cable

The data is divided into subsections according to the number and size of the supply modules used. For the usage of modules in each drive type, see the section Type equivalence table on page *151*. The cables enter the breaker cubicle.

Supply modules	Screw size	Tightening torque	Cable lead-throughs
1×R7i 1×R8i	M12 (½”)	70 N·m (50 lbf·ft)	6 × Ø60 mm
2×R8i 3×R8i 4×R8i	M12 (½”)	70 N·m (50 lbf·ft)	18 × Ø60 mm
6×R8i … 10×R8i	M12 (½”)	70 N·m (50 lbf·ft)	27 × Ø60 mm

Dimensions of input terminal in R7i +R7i and R8i+R8i units

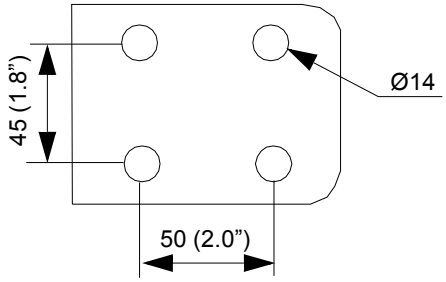

Dimensions of input terminal in 600 mm breaker cubicle

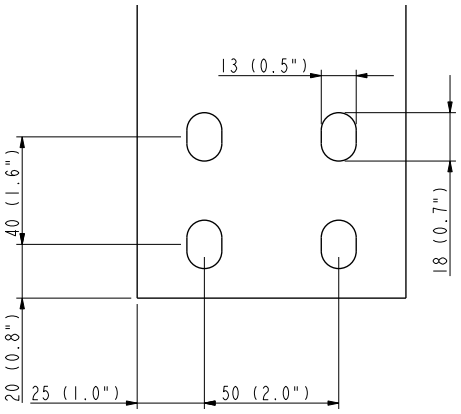

Dimensions of input busbar in 1000 mm breaker cubicle

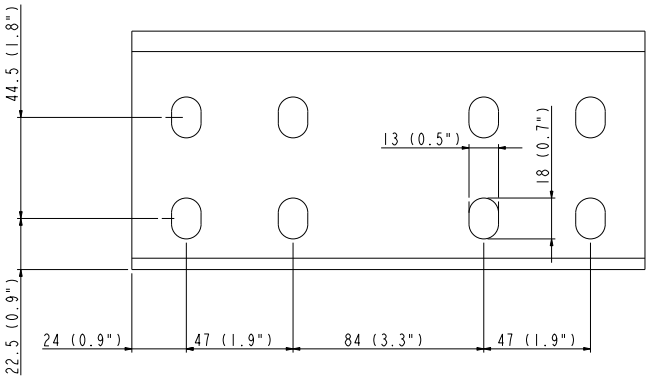

Terminal and lead-through data for the motor cable

Units without common motor terminal cubicle (no option +H359)

When the drive is not equipped with common motor terminal cubicle, the motor cables enter the inverter module cubicle(s).

Inverter unit configuration	No. of busbars	Screw size	Tightening torque	Cable lead-throughs
R7i, n×R8i	n×3	M12 (½")	70 N·m (52 lbf·ft)	n × [6 × Ø60 mm (2.36")]

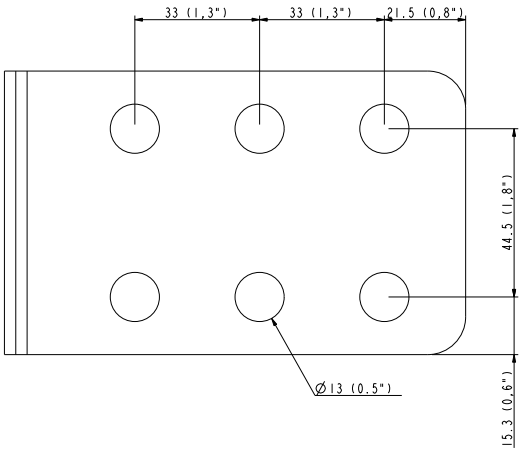

Dimensions of output busbar in inverter module cubicle

n = number of inverter modules

Units with the Common Motor Terminal (CMT) cubicle (option +H359)

Inverter unit		No. of busbars	Screw size	Tightening torque	Cable lead-throughs
Modules	**ACS800-37LC type**				
R7i, R8i, 2×R8i	All	3	M12 (½”)	70 N·m (52 lbf·ft)	9 × Ø60 mm (2.36“) or 12 × Ø60 mm (in 400 mm wide cubicles)
3×R8i	All	3	M12 (½”)	70 N·m (52 lbf·ft)	
4×R8i, 5×R8i	690 V	3	M12 (½”)	70 N·m (52 lbf·ft)	12 × Ø60 mm
4×R8i	400 and 500 V	2×3	M12 (½”)	70 N·m (52 lbf·ft)	18 × Ø60 mm
5×R8i, 6×R8i	400 and 500 V	2×3	M12 (½”)	70 N·m (52 lbf·ft)	2 × (12 × Ø60 mm)
6×R8i, 7×R8i	690 V	2×3	M12 (½”)	70 N·m (52 lbf·ft)	18 × Ø60 mm
8×R8i, 9×R8i	690 V	2×3	M12 (½”)	70 N·m (52 lbf·ft)	2 × (12 × Ø60 mm)
10×R8i	690 V	3+(2×3)	M12 (½”)	70 N·m (52 lbf·ft)	12 × Ø60 mm + 18 × Ø60 mm

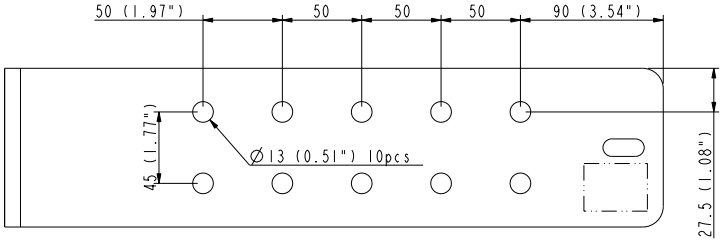

Dimensions of output busbar in 300 mm CMT cubicle

Dimensions of output busbar in 400 mm CMT cubicle

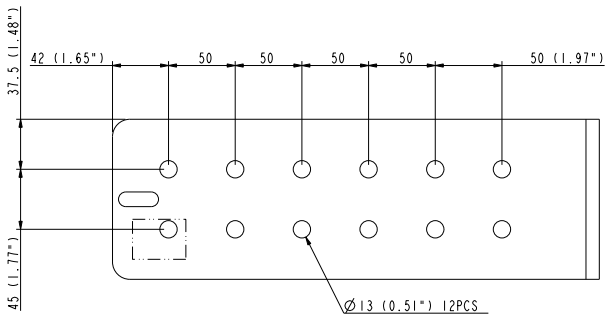

Dimensions of output busbar in 600 mm CMT cubicle

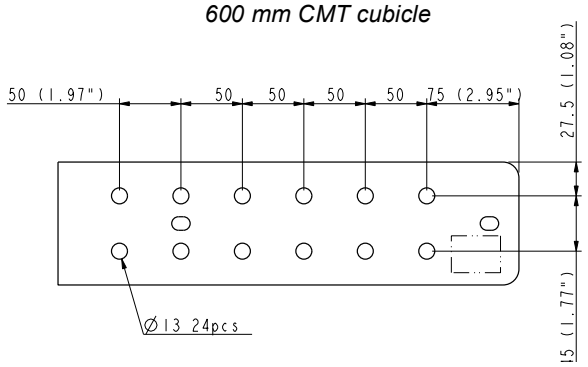

Terminal and lead-through data for the resistor cable

See *ACS800-607LC 3-phase Brake Units Hardware Manual* (3AFE68835861 [English]) or *ACW 621 Braking Chopper Sections User’s Manual* (3BFE64314874 [English]).

Terminal and lead-through data for the control cables

See section *Default I/O connection diagram* on page *105*. Each incoming and inverter module cubicle is equipped with one EMI conductive cushions lead-through.

Electrical power network specification

Voltage (U_1)	380/400/415 V AC 3-phase ± 10% for 400 V AC units 380/400/415/440/460/480/500 V AC 3-phase ± 10% for 500 V AC units 525/550/575/600/660/690 V AC 3-phase ± 10% for 690 V AC units
Short-circuit withstand strength (IEC 60439-1)	Units without grounding switch: Maximum allowable prospective short-circuit current is 65 kA when protected by fuses given in the fuse tables. Units with grounding switch: Maximum allowable prospective short-circuit current is 50 kA when protected by fuses given in the fuse tables.
Short-circuit current protection (UL 508A)	The drive is suitable for use on a circuit capable of delivering not more than 100,000 rms symmetrical amperes at 600 V maximum when protected by fuses given in the fuse tables.
Short-circuit current protection (CSA C22.2 No. 14-05)	The drive is suitable for use on a circuit capable of delivering not more than 65 kA rms symmetrical amperes at 600 V maximum when protected by fuses given in the fuse tables.
Frequency	50 ± 2 Hz or 60 ± 2 Hz. Maximum rate of change 17 %/s
Imbalance	Max. ± 3% of nominal phase-to-phase input voltage
Voltage dips	Max. 25%
Power factor	$\frac{I_1}{I_{rms}} \cdot \text{cosphi} > 0.98$ cosphi = 1.00 (fundamental at nominal load) I_1 = fundamental input current rms value I_{rms} = total input current rms value
Harmonic distortion	Harmonics are below the limits defined in IEEE519 for all I_{sc}/I_L. Each individual harmonic current fulfils IEEE519 table 10-3 for $I_{sc}/I_L \geq 20$. Current THD and each individual current harmonic fulfil IEC 61000-3-4 table 5.2 for $R_{sce} \geq 66$. The values will be met if the supply network voltage is not distorted by other loads and when the drive operates at the nominal load.

Motor connection data

Motor/Generator types	Asynchronous AC induction and permanent magnet synchronous motors
Voltage (U_2)	0 to U_1, 3-phase symmetrical, U_{max} at the field weakening point
Frequency	DTC mode: 0 to 3.2 · f_f. Maximum frequency 300 Hz. $f_f = \frac{U_N}{U_m} \cdot f_m$ f_f: frequency at field weakening point; U_N: electrical power system voltage; U_m: rated motor voltage; f_m: rated motor frequency
Frequency resolution	0.01 Hz
Current	See section *Ratings*.
Power limit	2 × P_{hd}. After approximately 2 minutes at 2 × P_{hd}, the limit is set at $P_{cont.max}$.
Field weakening point	8 to 300 Hz
Switching frequency	2…3 kHz (average)

Brake resistor connection data

See section *3-phase brake units (option +D152)*, page *153*, or section *1-phase brake choppers (option +D150) and resistors (option +D151)*, page *152*.

Control unit (RDCU/RMIO) connection data

Analog inputs

	With Standard Control Program two programmable differential current inputs (0 mA / 4 mA ... 20 mA, R_{in} = 100 ohm) and one programmable differential voltage input (-10 V / 0 V / 2 V ... +10 V, R_{in} = 200 kohm).
	The analog inputs are galvanically isolated as a group.
Insulation test voltage	500 V AC, 1 min
Max. common mode voltage between the channels	±15 V DC
Common mode rejection ratio	$\geq$ 60 dB at 50 Hz
Resolution	0.025% (12 bit) for the -10 V ... +10 V input. 0.5% (11 bit) for the 0 ... +10 V and 0 ... 20 mA inputs.
Inaccuracy	±0.5% (Full Scale Range) at 25 °C (77 °F). Temperature coefficient: ±100 ppm/°C (±56 ppm/°F), max.

Constant voltage output

Voltage	+10 V DC, 0, -10 V DC ± 0.5% (Full Scale Range) at 25 °C (77 °F). Temperature coefficient: ±100 ppm/°C (±56 ppm/°F) max.
Maximum load	10 mA
Applicable potentiometer	1 kohm to 10 kohm

Auxiliary power output

Voltage	24 V DC ± 10%, short circuit proof
Maximum current	250 mA (shared between this output and optional modules installed on the RMIO)

Analog outputs

	Two programmable current outputs: 0 (4) to 20 mA, $R_L \leq$ 700 ohm
Resolution	0.1% (10 bit)
Inaccuracy	±1% (Full Scale Range) at 25 °C (77 °F). Temperature coefficient: ±200 ppm/°C (±111 ppm/°F) max.

Digital inputs

	With Standard Control Program six programmable digital inputs (common ground: 24 V DC, -15% to +20%) and a start interlock input. Group isolated, can be divided in two isolated groups (see *Isolation and grounding diagram* below).
	Thermistor input: 5 mA, < 1.5 kohm ≙ “1” (normal temperature), > 4 kohm ≙ “0” (high temperature), open circuit ≙ “0” (high temperature).
	Internal supply for digital inputs (+24 V DC): short-circuit proof. An external 24 V DC supply can be used instead of the internal supply.
Insulation test voltage	500 V AC, 1 min
Logical thresholds	< 8 V DC ≙ “0”, > 12 V DC ≙ “1”
Input current	DI1 to DI 5: 10 mA, DI6: 5 mA
Filtering time constant	1 ms

Relay outputs

	Three programmable relay outputs
Switching capacity	8 A at 24 V DC or 250 V AC, 0.4 A at 120 V DC
Minimum continuous current	5 mA rms at 24 V DC
Maximum continuous current	2 A rms
Insulation test voltage	4 kV AC, 1 minute

DDCS fibre optic link

	With optional communication adapter module RDCO. Protocol: DDCS (ABB Distributed Drives Communication System)

24 V DC power input

Voltage	24 V DC ± 10%
Typical current consumption (without optional modules)	250 mA
Maximum current consumption	1200 mA (with optional modules inserted)

The terminals on the RMIO board as well as on the optional modules attachable to the board fulfil the Protective Extra Low Voltage (PELV) requirements stated in EN 50178 provided that the external circuits connected to the terminals also fulfil the requirements and the installation site is below 2000 m (6562 ft). Above 2000 m (6562 ft), see page *91.*

Isolation and grounding diagram

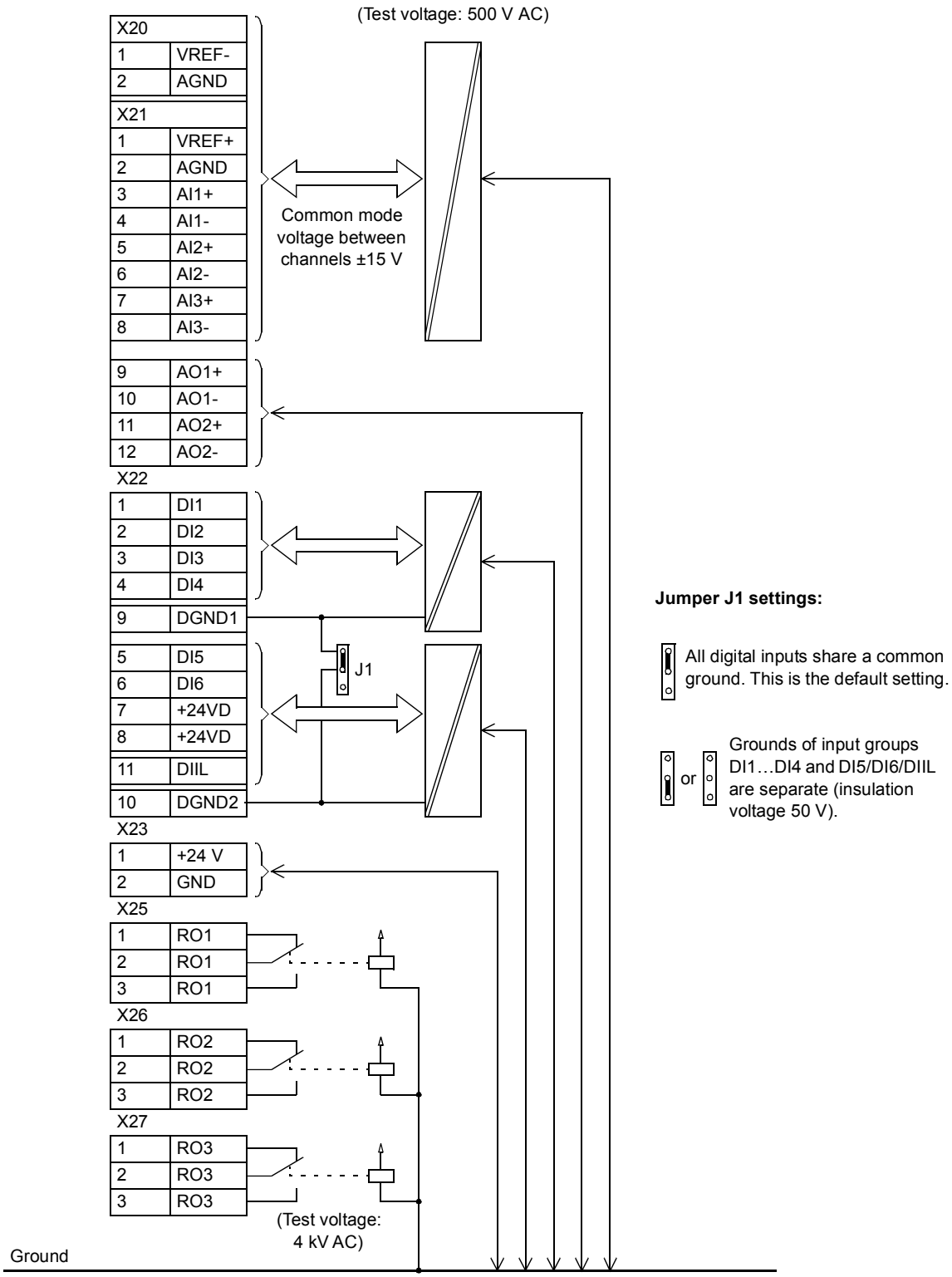

Efficiency

≥ 97% (at rated current and nominal supply voltage)

Degree of protection

IP42 (UL Type 1), IP54, (UL Type 12)

Ambient conditions

Environmental limits for the drive are given below. The drive must be used in a heated, indoor controlled environment.

	Operation installed for stationary use	**Storage** in the protective package	**Transportation** in the protective package
Installation site altitude	0 to 4000 m (13123 ft) above sea level. 690 V units: 0 to 2000 m (6562 ft) above sea level. Above 1000 m (3281 ft), see *Derating* on page *150*.	-	-
Air temperature	0…+55° (+32…+131°F), no frost allowed [above +45°C (+113°F), see *Derating* on page *150*]	-40…+70°C (-40 to +158°F)	-40…+70°C (-40 to +158°F)
Relative humidity	5 to 95%	Max. 95%	Max. 95%
	No condensation allowed. Maximum allowed relative humidity is 60% in the presence of corrosive gases.		
Contamination levels (IEC60721-3-3, IEC60721-3-2, IEC60721-3-1)	No conductive dust allowed.		
	Boards with coating: Chemical gases: Class 3C2 Solid particles: Class 3S2	**Boards with coating:** Chemical gases: Class 1C2 Solid particles: Class 1S3	**Boards with coating:** Chemical gases: Class 2C2 Solid particles: Class 2S2
Atmospheric pressure	70 to 106 kPa 0.7 to 1.05 atmospheres	70 to 106 kPa 0.7 to 1.05 atmospheres	60 to 106 kPa 0.6 to 1.05 atmospheres
Vibration	**Marine requirements** ±1 mm (peak value, 2…13.2 Hz) 0.7g (13.2 - 100 Hz) Max. amplification 10 **IEC 60068-2-6** 0,075 mm (0…58 Hz) 10 m/s^2 (58…150Hz) Max. amplification 10	**1M2, IEC 60721-3-1** 1.5 mm (2…9 Hz) 5 m/s^2 (9…200 Hz)	**2M2, IEC 60721-3-2** 3,5 mm (2…9 Hz) 10 m/s^2 (9…200 Hz) Random 10-200 Hz, acceleration spectral density 1 m2/s³
Shock (IEC 60068-2-29)	Not allowed	Max. 100 m/s^2 (330 ft./s^2), 11 ms	Max. 100 m/s^2 (330 ft./s^2), 11 ms
Free fall	Not allowed	100 mm (4 in.) for weight over 100 kg (220 lb.)	100 mm (4 in.) for weight over 100 kg (220 lb.)

Materials

Cabinet	Hot-dip zinc-coated (thickness approx. 20 µm) steel sheet (thickness 1.5 mm) with polyester thermosetting powder coating (thickness approx. 80 µm) on visible surfaces except back panel. Colour: RAL 7035 (light beige, semigloss).
Busbars	Tin- or silver-plated copper
Internal cooling circuit piping	Aluminium, acid-fast stainless steel, PA pipes (inner/outer diameter in drain and bleed pipes: 9 mm / 11.5 mm; inner/outer diameter in main pipes of the modules: 13.5 mm / 17.5 mm)
Fire safety of materials (IEC 60332-1)	Insulating materials and non-metallic items: Mostly self-extinctive
Packaging	Frame: Wood or plywood. Plastic wrapping: PE-LD. Bands: PP or steel.
Disposal	The drive contains raw materials that should be recycled to preserve energy and natural resources. The package materials are environmentally compatible and recyclable. All metal parts can be recycled. The plastic parts can either be recycled or burned under controlled circumstances, according to local regulations. Most recyclable parts are marked with recycling marks. If recycling is not feasible, all parts excluding electrolytic capacitors and printed circuit boards can be landfilled. The DC capacitors (C1-1 to C1-x) contain electrolyte and the printed circuit boards contain lead, both of which are classified as hazardous waste within the EU. They must be removed and handled according to local regulations. For further information on environmental aspects and more detailed recycling instructions, please contact your local ABB distributor.

Auxiliary circuit current consumption

The table below shows the current consumption of the main components in the auxiliary circuit. See also section *Connecting external power supply for the auxiliary circuits* on page *102* for instructions.

Drive/Load	Current consumption (A)									
	Externally supplied fan circuits				Externally supplied control circuits			Externally supplied fan and control circuits		
	230 V AC 50 Hz	230 V AC 60 Hz	115 V AC 60 Hz		230 V AC 50/60 Hz	115 V AC 60 Hz		230 V AC 50 Hz	230 V AC 60 Hz	115 V AC 60 Hz
Drives										
1×R7i + 1×R7i 1×R8i + 1×R8i	n.a.	n.a.	n.a.		1.1	2.2		n.a.	n.a.	n.a.
2×R8i + 2×R8i	5.1	5.8	11.6		2.2	4.4		7.3	8	16
2×R8i + 2×R8i	5.1	5.8	11.6		2.2	4.4		7.3	8	16
3×R8i + 3×R8i	7.3	8.3	17		2.2	4.4		9.5	10.5	21.4
4×R8i + 4×R8i	9.5	11	22		2.2	4.4		11.7	13.2	26.4
6×R8i + 6×R8i	14.5	16.5	32.5		2.5	5		17	19	37.5
8×R8i + 7×R8i	18	21	41		2.5	5		20.5	23.5	46
9×R8i + 8×R8i	21	23	46		2.5	5		23.5	25.5	51
10×R8i + 9×R8i	23	26	52		2.5	5		25.5	28.5	57
Brake units										
3-phase brake units (ACS800-607LC)	1.4	1.5	3	1)	-	-		-	-	-
NBRW fan unit	0.3	0.3	0.5	1)	-	-		-	-	-
Brake resistors (2 × SAFUR)	2.8	3.4	6.8	1)	-	-		-	-	-
Control circuit										
Single 3-phase brake unit	-	-	-		0.1	0.2		-	-	-
Multiple 3-phase brake units	-	-	-		0.5	1	2)	-	-	-
Sine filters										
NSIN0210-0485/6	0.35	0.4	0.8	1)	-	-		-	-	-
NSIN0210-0485/6	0.7	0.8	1.6	1) 3)	-	-		-	-	-
NSIN0900-1380/6	2.8	3.4	6.8	1)	-	-		-	-	-
NSIN0900-1380/6	4.8	5.5	11	1) 3)	-	-		-	-	-
Optional cabinets										
Top exit (+H351+H359))	0.35	0.4	0.8		-	-		-	-	-
Cooling unit (+C139, +C140, +C141): 24 V DC power supply and control relays	See *ACS800-1007LC User's Manual* (3AFE68621101 [English]).									

1) values for each single unit

2) total value for multiple units

3) air-cooled IP54 sine filter

Applicable standards

	The drive complies with the following standards.
• EN ISO 13849-1:2008	*Safety of machinery – Safety-related parts of control systems – Part 1: General principles for design*
• EN 60204-1:2006	*Safety of machinery. Electrical equipment of machines. Part 1: General requirements.*
• IEC/EN 60529:1991 + corrigendum May 1993 + amendment A1:2000)	*Degrees of protection provided by enclosures (IP code).*
• IEC 60664-1:2007	*Insulation coordination for equipment within low-voltage systems. Part 1: Principles, requirements and tests*
• EN 61800-3:2004	*Adjustable speed electrical power drive systems - Part 3: EMC product standard including specific test methods*
• EN 61800-5-1:2007	*Adjustable speed electrical power drive systems - Part 5-1: Safety requirements – Electrical, thermal and energy*
• EN 61800-5-2:2007	*Adjustable speed electrical power drive systems - Part 5-2: Safety requirements – Functional*
• UL 508A: 1st Edition	*UL Standard for Safety, Power Conversion Equipment*, second edition
• CSA C22.2 No. 14-05	*Industrial control equipment*

CE marking

A CE mark is attached to the drive to verify that the unit follows the provisions of the European Low Voltage, and EMC Directives. The CE marking also verifies that the drive, in regard to its safety functions (such as Safe torque off), conforms with the Machinery Directive as a safety component.

Compliance with the European Low Voltage Directive

The compliance with the European Low Voltage Directive has been verified according to standards EN 60204-1 and EN 61800-5-1.

Compliance with the European EMC Directive

The EMC Directive defines the requirements for immunity and emissions of electrical equipment used within the European Union. The EMC product standard (EN 61800-3:2004) covers requirements stated for drives. See section *Compliance with EN 61800-3:2004* below.

Compliance with the European Machinery Directive

The drive is an electronic product which is covered by the European Low Voltage Directive. However, the drive can be equipped with the Safe torque off function and other safety functions for machinery which, as safety components, are in the scope of the Machinery Directive. These functions of the drive comply with European harmonized standards such as EN 61800-5-2. The declaration of conformity for each function is in the appropriate function-specific manual.

Compliance with EN 61800-3:2004

Definitions

EMC stands for **E**lectro**m**agnetic **C**ompatibility. It is the ability of electrical/electronic equipment to operate without problems within an electromagnetic environment. Likewise, the equipment must not disturb or interfere with any other product or system within its locality.

First environment includes establishments connected to a low-voltage network which supplies buildings used for domestic purposes.

Second environment includes establishments connected to a network not supplying domestic premises.

Drive of category C2: drive of rated voltage less than 1000 V and intended to be installed and commissioned only by a professional when used in the first environment. **Note:** A professional is a person or organisation having necessary skills in installing and/or commissioning power drive systems, including their EMC aspects.

Drive of category C3: drive of rated voltage less than 1000 V and intended for use in the second environment and not intended for use in the first environment.

Drive of category C4: drive of rated voltage equal to or above 1000 V, or rated current equal to or above 400 A, or intended for use in complex systems in the second environment.

Category C2

The 400 and 500 V drives comply with the standard with the following provisions:

1. The supply unit is equipped with EMC filter +E202.
2. The motor and control cables are selected as specified in chapter *Planning the electrical installation*.
3. The drive is installed according to the instructions given in chapter *Electrical installation*.
4. Motor cables do not exceed 100 metres (328 ft).

WARNING! The drive may cause radio interference if used in a residential or domestic environment. The user is required to take measures to prevent interference, in addition to the requirements for CE compliance listed above, if necessary.

Note: It is not allowed to install a drive equipped with EMC filter +E202 on IT (unearthed) systems. The supply network becomes connected to earth potential through the EMC filter capacitors which may cause danger or damage the unit.

Category C3

The drive complies with the standard with the following provisions:

1. The motor and control cables are selected as specified in chapter *Planning the electrical installation*.
2. The drive is installed according to the instructions given in chapter *Electrical installation*.
3. Motor cables do not exceed 100 metres (328 ft).

WARNING! A drive of category C3 is not intended to be used on a low-voltage public network which supplies domestic premises. Radio frequency interference is expected if the drive is used on such a network.

Category C4

If the provisions under *Category C3* cannot be met, the requirements of the standard can be met as follows:

1. It is ensured that no excessive emission is propagated to neighbouring low-voltage networks. In some cases, the natural suppression in transformers and cables is sufficient. If in doubt, the supply transformer with static screening between the primary and secondary windings can be used.

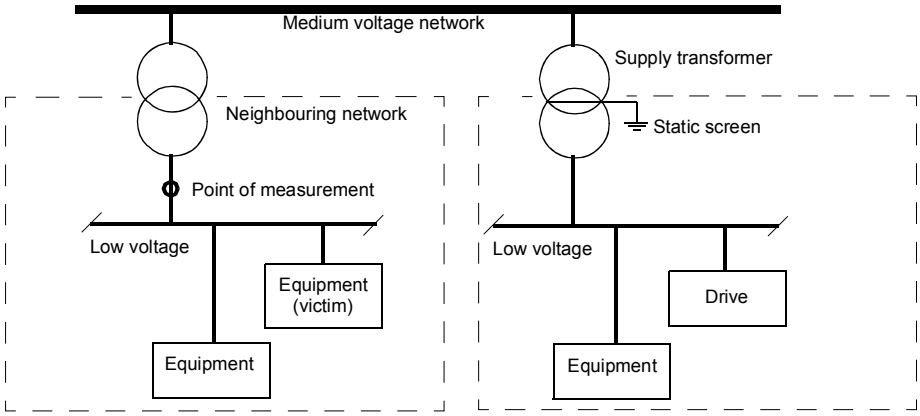

2. An EMC plan for preventing disturbances is drawn up for the installation. A template is available from the local ABB representative.
3. The motor and control cables are selected as specified in chapter *Planning the electrical installation*.
4. The drive is installed according to the instructions given in chapter *Electrical installation*.

WARNING! A drive of category C4 is not intended to be used on a low-voltage public network which supplies domestic premises. Radio frequency interference is expected if the drive is used on such a network.

UL marking

The drive is cULus listed and cCSAus certified. The approvals are valid with rated voltages up to 600 V. The markings are attached to the drives when options +C129 (cULus) or +C134 (cCSAus) are selected.

UL checklist

Input power connection – Short-circuit current protection (UL 508A): The drive is suitable for use in a circuit capable of delivering not more than 100,000 symmetrical amperes (rms) at 600 V maximum when protected with the fuses given in section *Fuses*, page *155*.

Disconnecting device (disconnecting means) – See chapter *Planning the electrical installation*, page *69*.

Ambient conditions – The drive is to be used in a heated indoor controlled environment. For the specifications, see *Ambient conditions on page 169*.

Input cable fuses – For installation in the United States, branch circuit protection must be provided in accordance with National Electrical Code (NEC) and any applicable local codes. To fulfil this requirement, use the US fuses given in section *Fuses*, page *155*.

For installation in Canada, branch circuit protection must be provided in accordance with Canadian Electrical Code and any applicable provincial codes. To fulfil this requirement, use the UL classified fuses given in section *Fuses*, page *155*.

Power cable selection – See chapter *Planning the electrical installation*, page *69*.

Power cable connections – For the connection diagram and tightening torques, see *Electrical installation*.

Control connections – For the connection diagram and tightening torques, see *Electrical installation*.

Overload protection – The drive provides overload protection in accordance with the National Electrical Code (US). See the *Firmware Manual* for setting. Default setting is off, must be activated at start-up.

Brake unit – The drive can be equipped with a brake unit that will allow the drive to dissipate regenerative energy (normally associated with quickly decelerating a motor).

UL standards – See *Applicable standards* on page *172*.

CSA marking

The ACS800-37LC is CSA marked.

Approvals

The ACS800-37LC+C121 units are type approved by American Bureau of Shipping, Det Norske Veritas and Lloyd's Register of Shipping.

Cyber security disclaimer

This product is designed to be connected to and to communicate information and data via a network interface. It is Customer's sole responsibility to provide and continuously ensure a secure connection between the product and Customer network or any other network (as the case may be). Customer shall establish and maintain any appropriate measures (such as but not limited to the installation of firewalls, application of authentication measures, encryption of data, installation of anti-virus programs, etc) to protect the product, the network, its system and the interface against any kind of security breaches, unauthorized access, interference, intrusion, leakage and/or theft of data or information. ABB and its affiliates are not liable for damages and/or losses related to such security breaches, any unauthorized access, interference, intrusion, leakage and/or theft of data or information.

Disclaimer

The manufacturer shall have no obligation with respect to any product which (i) has been improperly repaired or altered; (ii) has been subjected to misuse, negligence or accident; (iii) has been used in a manner contrary to the manufacturer's instructions; or (iv) has failed as a result of ordinary wear and tear.

Dimensions

What this chapter contains

This chapter contains example dimension drawings and a table of dimensions.

Table of dimensions

Drive type	Height 1	Height 2	Width 1 (basic)	Width 2 (+H353)	Width 3 (+H359)
	mm	mm	mm	mm	mm
U_N = 400 V					
ACS800-37LC-0110-3	2003	2315	1200	1500	300
ACS800-37LC-0140-3	2003	2315	1200	1500	300
ACS800-37LC-0170-3	2003	2315	1200	1500	300
ACS800-37LC-0200-3	2003	2315	1200	1500	300
ACS800-37LC-0260-3	2003	2315	1200	1500	300
ACS800-37LC-0350-3	2003	2315	1200	1500	300
ACS800-37LC-0430-3	2003	2315	1200	1500	300
ACS800-37LC-0580-3	2003	2315	1200	1500	300
ACS800-37LC-0870-3	2003	2315	1900	2300	300
ACS800-37LC-1130-3	2003	2315	1900	2300	300
ACS800-37LC-1680-3	2003	2315	3100	3700	400
ACS800-37LC-2220-3	2003	2315	3200	4000	600
ACS800-37LC-3300-3	2003	2315	5000	6000	400 + 400
U_N = 500 V					
ACS800-37LC-0120-5	2003	2315	1200	1500	300
ACS800-37LC-0170-5	2003	2315	1200	1500	300
ACS800-37LC-0210-5	2003	2315	1200	1500	300
ACS800-37LC-0250-5	2003	2315	1200	1500	300
ACS800-37LC-0310-5	2003	2315	1200	1500	300
ACS800-37LC-0410-5	2003	2315	1200	1500	300
ACS800-37LC-0520-5	2003	2315	1200	1500	300
ACS800-37LC-0690-5	2003	2315	1200	1500	300
ACS800-37LC-1030-5	2003	2315	1900	2300	300
ACS800-37LC-1350-5	2003	2315	1900	2300	300
ACS800-37LC-2000-5	2003	2315	3100	3700	400
ACS800-37LC-2640-5	2003	2315	3200	4000	600
ACS800-37LC-3930-5	2003	2315	5000	6000	400 + 400

Drive type	Height 1	Height 2	Width 1 (basic)	Width 2 (+H353)	Width 3 (+H359)
	mm	mm	mm	mm	mm
U_N = 690 V					
ACS800-37LC-0130-7	2003	2315	1200	1500	300
ACS800-37LC-0170-7	2003	2315	1200	1500	300
ACS800-37LC-0210-7	2003	2315	1200	1500	300
ACS800-37LC-0280-7	2003	2315	1200	1500	300
ACS800-37LC-0390-7	2003	2315	1200	1500	300
ACS800-37LC-0470-7	2003	2315	1200	1500	300
ACS800-37LC-0630-7	2003	2315	1200	1500	300
ACS800-37LC-0950-7	2003	2315	1900	2200	300
ACS800-37LC-1240-7	2003	2315	1900	2200	300
ACS800-37LC-1840-7	2003	2315	2400	2800	300
ACS800-37LC-2430-7	2003	2315	3200	3800	400
ACS800-37LC-3620-7	2003	2315	4200	5000	600
ACS800-37LC-4630-7	2003	2315	6200	7000	400 + 400
ACS800-37LC-5300-7	2003	2315	6500	7500	400 + 400
ACS800-37LC-5960-7	2003	2315	7400	8400	400 + 400

Height 1: Height of the basic bottom entry/exit unit

Height 2: Height with optional sine output filter (+E206)

Width 1: Width of the basic unit

Width 2: Width with optional top exit of cables (+H353)

Width 3: Width of commen motor terminal cubicle (option +H359) for units with bottom exit of cables

Optional auxiliary control cubicle width: 400 mm or 600 mm

1-phase brake chopper (option +D150) cubicle width: 400 mm

3-phase brake chopper (option +D152) cubicle width: 400 mm (bottom exit) and 700 mm (top exit)

Brake resistor cubicle width (option +D151): 800 mm for each 2×SAFUR resistor package

Frame sizes R7i+R7i and R8i+R8i (bottom entry/exit)

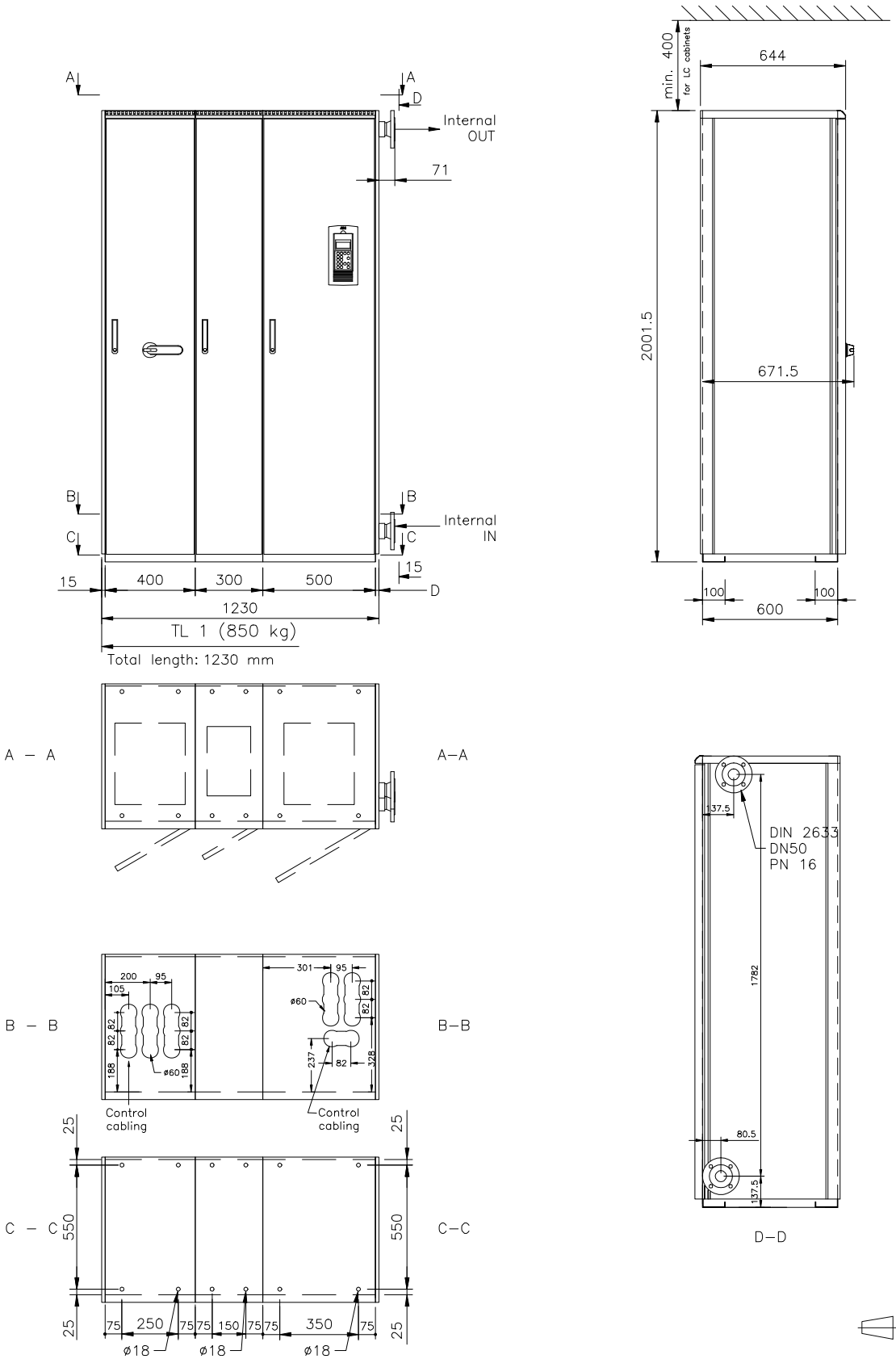

Frame sizes R7i+R7i and R8i+R8i (marine units, +C121)

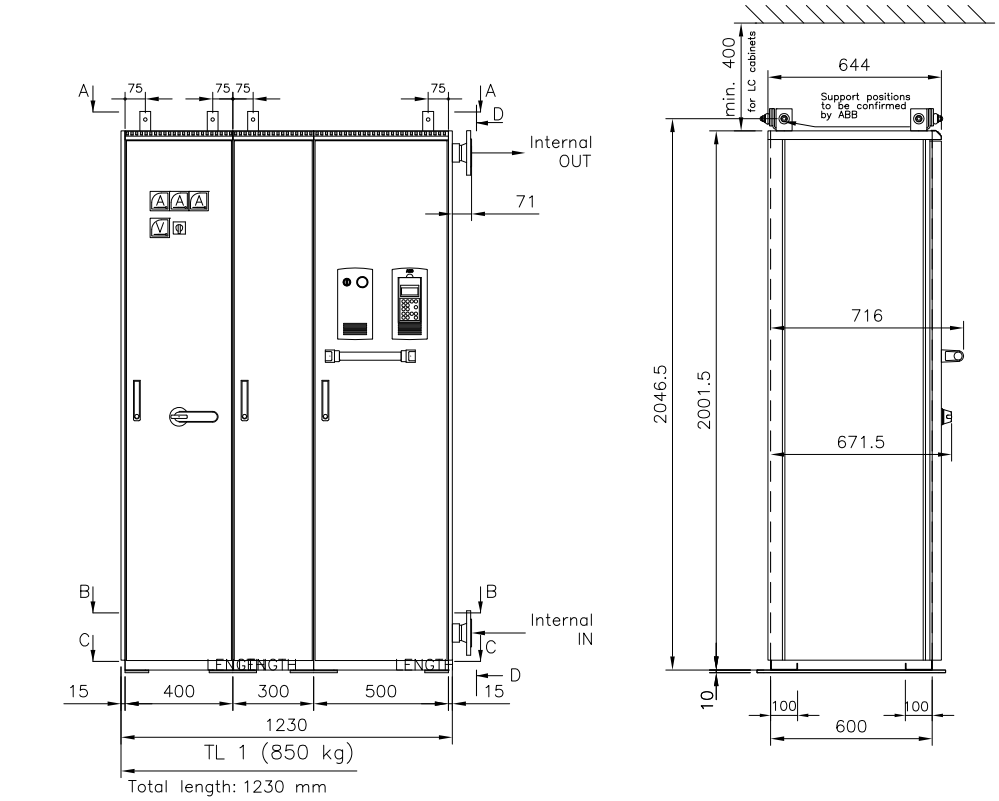

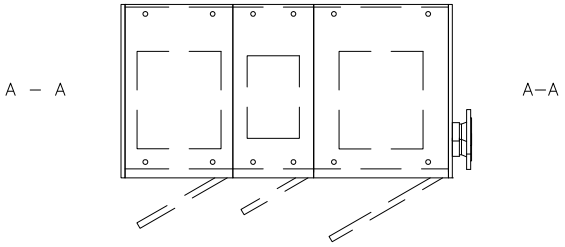

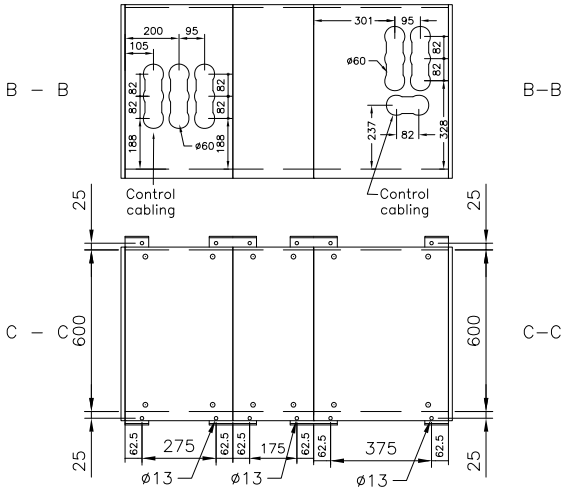

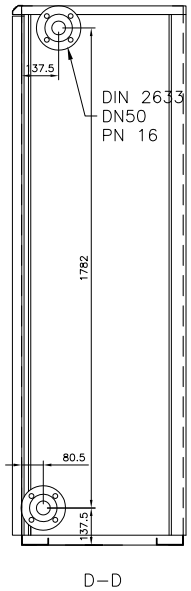

Further information

Product and service inquiries

Address any inquiries about the product to your local ABB representative, quoting the type designation and serial number of the unit in question. A listing of ABB sales, support and service contacts can be found by navigating to www.abb.com/searchchannels.

Product training

For information on ABB product training, navigate to new.abb.com/service/training.

Providing feedback on ABB manuals

Your comments on our manuals are welcome. Navigate to new.abb.com/drives/manuals-feedback-form.

Document library on the Internet

You can find manuals and other product documents in PDF format on the Internet at www.abb.com/drives/documents.

Contact us

www.abb.com/drives
www.abb.com/drivespartners

3AUA0000065342 Rev B (EN) 2016-06-07

Power and productivity
for a better world™