Errata

Title & Document Type: 3457A Multimeter Service Manual

Manual Part Number: 03457-90011

Revision Date: May 1986

HP References in this Manual

This manual may contain references to HP or Hewlett-Packard. Please note that Hewlett-Packard's former test and measurement, semiconductor products and chemical analysis businesses are now part of Agilent Technologies. We have made no changes to this manual copy. The HP XXXX referred to in this document is now the Agilent XXXX. For example, model number HP8648A is now model number Agilent 8648A.

About this Manual

We've added this manual to the Agilent website in an effort to help you support your product. This manual provides the best information we could find. It may be incomplete or contain dated information, and the scan quality may not be ideal. If we find a better copy in the future, we will add it to the Agilent website.

Support for Your Product

Agilent no longer sells or supports this product. You will find any other available product information on the Agilent Test & Measurement website:

www.tm.agilent.com

Search for the model number of this product, and the resulting product page will guide you to any available information. Our service centers may be able to perform calibration if no repair parts are needed, but no other support from Agilent is available.

Agilent Technologies

HP 3457A Multimeter

Service Manual

HEWLETT-PACKARD COMPANY

Loveland Instrument Division
P.O. Box 301
Loveland, Colorado 80537

MANUAL PART NO. 03457-90011
MICROFICHE PART NO. 03457-99011
Printed in U.S.A. May 1986

HEWLETT PACKARD

SAFETY SUMMARY

The following general safety precautions must be observed during all phases of operation, service, and repair of this instrument. Failure to comply with these precautions or with specific warnings elsewhere in this manual violates safety standards of design, manufacture, and intended use of the instrument. Hewlett-Packard Company assumes no liability for the customer's failure to comply with these requirements.

GROUND THE INSTRUMENT

To minimize shock hazard, the instrument chassis and cabinet must be connected to an electrical ground.

DO NOT OPERATE IN AN EXPLOSIVE ATMOSPHERE

Do not operate the instrument in the presence of flammable gases or fumes. Operation of any electrical instrument in such an environment constitutes a definite safety hazard.

KEEP AWAY FROM LIVE CIRCUITS

Operating personnel must not remove instrument covers. Component replacement and internal adjustments must be made by qualified maintenance personnel. Under certain conditions, dangerous voltages may exist even with the instrument switched off. To avoid injuries, always disconnect input voltages and discharge circuits before touching them.

DO NOT SERVICE OR ADJUST ALONE

Do not attempt internal service or adjustment unless another person, capable of rendering first aid and resuscitation, is present.

DO NOT SUBSTITUTE PARTS OR MODIFY INSTRUMENT

Because of the danger of introducing additional hazards, do not install substitute parts or perform any unauthorized modification to the instrument. Return the instrument to a Hewlett-Packard Sales and Service Office for service and repair to ensure that safety features are maintained.

DO NOT OPERATE A DAMAGED INSTRUMENT

Whenever it is possible that the safety protection features built into this instrument have been impaired, either through physical damage, excessive moisture, or any other reason, REMOVE POWER and do not use the instrument until safe operation can be verified by service-trained personnel. If necessary, return the instrument to a Hewlett-Packard Sales and Service Office for service and repair to ensure that safety features are maintained.

HEWLETT PACKARD

Operating and Safety Symbols

Symbols Used On Products And In Manuals

~ LINE	AC line voltage input receptacle.
	Instruction manual symbol affixed to product. Cautions the user to refer to respective instruction manual procedures to avoid possible damage to the product.
	Indicates dangerous voltage – terminals connected to interior voltage exceeding 1000 volts.
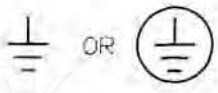	Protective conductor terminal. Indicates the field wiring terminal that must be connected to earth ground before operating equipment – protects against electrical shock in case of fault.
	Clean ground (low-noise). Indicates terminal that must be connected to earth ground before operating equipment – for single common connections and protection against electrical shock in case of fault.
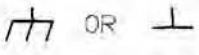	Frame or chassis ground. Indicates equipment chassis ground terminal – normally connects to equipment frame and all metal parts.
	Affixed to product containing static sensitive devices – use anti-static handling procedures to prevent electrostatic discharge damage to components.

NOTE

Calls attention to a procedure, practice, or condition that requires special attention by the reader.

CAUTION

Calls attention to a procedure, practice, or condition that could possibly cause damage to equipment or permanent loss of data.

WARNING

Calls attention to a procedure, practice, or condition that could possibly cause bodily injury or death.

TABLE OF CONTENTS

Section I — Page

GENERAL INFORMATION 1-1
1-1 Introduction 1-1
1-3 Manual Description 1-1
1-5 Instrument Description. 1-2
1-7 Safety Considerations 1-2
1-9 Instruments Covered by this Manual. . 1-2
1-13 Specifications 1-2
1-15 Options and Accessories 1-24
1-17 Test Equipment 1-25

Section II — Page

INSTALLATION 2-1
2-1 Introduction 2-1
2-3 Initial Inspection 2-1
2-5 Preparation for Use 2-2
2-8 Line Voltage Selection 2-2
2-10 Power Cords 2-2
2-12 Grounding Requirements. 2-3
2-14 Bench Use 2-3
2-16 Rack Mounting. 2-3
2-18 Interface Connections 2-4
2-19 Control Interface. 2-4
2-21 HP-IB Address Selection. 2-4
2-23 Changing the Address from the Front Panel 2-5
2-24 Changing the Address from the Controller. 2-5
2-25 Installation of Options. 2-6
2-28 Rear Terminal Assembly Removal. . 2-7
2-30 Plug-In Assembly Installation 2-8
2-32 Plug-In Assembly Configuration . . . 2-9
2-38 Wiring Block Preparation 2-11

Section III — Page

OPERATION 3-1
3-1 Introduction 3-1
3-3 General Information 3-1
3-4 AC Power 3-1
3-6 Power On. 3-1
3-9 Operation. 3-1
3-11 Voltage Measurements 3-1
3-18 Resistance Measurements. 3-3
3-25 Current Measurements 3-4
3-32 Frequency/Period Measurements . . 3-6
3-39 HP 44491A General Purpose Multiplexer 3-6
3-45 HP 44492A Reed Relay Multiplexer 3-8

Section IV — Page

PERFORMANCE TESTS 4-1
4-1 Introduction. 4-1
4-3 Equipment Required 4-1
4-5 Test Record 4-1
4-7 Calibration Cycle 4-1
4-9 Test Considerations 4-1
4-10 General 4-1
4-12 Performance Tests 4-2
DC Voltage Performance Tests 4-2
4-13 Preliminary Steps 4-2
4-14 DC Voltage Function - Offset Test . 4-2
4-16 DC voltage Function - Gain Test. . . 4-3
4-18 DC Voltage Function - Linearity Test 4-4
AC Voltage Performance Tests 4-4
4-20 AC Voltage Function - Gain Test. . . 4-4
4-22 AC Voltage Function - Frequency Response Test 4-5
DC Current Performance Tests 4-7
4-24 DC Current Function - Offset Test . 4-8
4-26 DC Current Function - Gain Test . . 4-8
AC Current Performance Tests 4-9
4-28 AC Current Function - Gain Test. . . 4-9
2-Wire Ohms Performance Tests 4-10
4-30 2-Wire Ohms Function - Offset Test 4-10
4-32 2-Wire Ohms Function - Gain Test . 4-11
4-Wire Ohms Performance Tests 4-11
4-34 4-Wire Ohms Function - Offset Test 4-12
4-36 4-Wire Ohms Function - Gain Test . 4-13
Frequency Counter Performance Tests . . 4-13
4-38 Frequency Counter - Accuracy Test 4-14
Rear Input Performance Tests (Standard Instrument) 4-14
4-40 Preliminary Steps 4-14
4-41 DC Voltage Function - Rear Terminal Offset Test 4-14
4-43 DC Current Function - Rear Terminal Offset Test 4-15
4-45 2-Wire Ohms Function - Offset Test 4-15
4-47 4-Wire Ohms Function - Offset Test 4-16
Rear Input Performance Tests (44491A General Purpose Relay Assy) . . . 4-17
4-49 Preliminary Steps 4-17

TABLE OF CONTENTS (Cont'd)

Section IV — Page

PERFORMANCE TESTS (Cont'd)

4-50 DC Voltage Function - 44491A Offset Test 4-17
4-52 2-Wire Ohms Function - 44491A Offset Test 4-18
4-54 4-Wire Ohms Function - 44491A Offset Test 4-18
4-56 DC Current Function - 44491A Offset Test 4-19
Rear Input Performance Tests (44492A 10 Channel Multiplex Assy). . . . 4-20
4-58 Preliminary Steps 4-20
4-59 DC Voltage Function - 44492A Offset Test 4-20
4-61 2-Wire Ohms Function - 44492A Offset Test 4-21
4-63 Operational Verification Tests . . . 4-22
DC Voltage Operational Verification Tests. 4-22
4-65 Preliminary Steps 4-22
4-66 DC Voltage Function - Offset Test. 4-22
4-68 DC Voltage Function - Gain Test. . 4-23
AC Voltage Operational Verification Tests. 4-24
4-70 AC Voltage Function - Gain Test. . 4-24
4-72 AC Voltage Function - Frequency Response Test. 4-24
DC Current Operational Verification Tests. 4-25
4-74 DC Current Function - Offset Test. 4-26
4-76 DC Current Function - Gain Test . 4-26
AC Current Operational Verification Tests. 4-27
4-78 AC Current Function - Gain Test. . 4-27
2-Wire Ohms Operational Verification Tests. 4-27
4-80 2-Wire Ohms Function - Offset Test 4-27
4-82 2-Wire Ohms Function - Gain Test . 4-28
4-Wire Ohms Operational Verification Tests. 4-29
4-84 4-Wire Ohms Function - Offset Test 4-29
4-86 4-Wire Ohms Function - Gain Test . 4-30
Frequency Counter Operational Verification Tests. 4-31
4-88 Frequency Counter - Accuracy Test 4-31
Rear Input Operational Verification Test (Standard Instrument) 4-32

Section IV — Page

PERFORMANCE TESTS (Cont'd)

4-90 Preliminary Steps 4-32
4-91 DC Voltage Function - Rear Terminal Offset Test 4-33
4-93 DC Current Function - Rear Terminal Offset Test 4-33
4-95 2-Wire Ohms Function - Rear Terminal Offset Test 4-33
4-97 4-Wire Ohms Function - Rear Terminal Offset Test 4-33
Rear Input Operational Verification Tests (44491A General Purpose Relay Assy) 4-34
4-99 Preliminary Steps 4-34
4-100 DC Voltage Function - 44491A Offset Test 4-35
4-102 2-Wire Ohms Function - 44491A Offset Test 4-35
4-104 4-Wire Ohms Function - 44491A Offset Test 4-35
4-106 DC Current Function - 44491A Offset Test 4-36
Rear Input Operational Verification Test (44492A 10 Channel Multiplex Assy) 4-36
4-108 Preliminary Steps. 4-37
4-109 DC Voltage Function - 44492A Offset Test 4-37
4-111 2-Wire Ohms Function - 44492A Offset Test Limits. 4-37

Section V — Page

CALIBRATION 5-1
5-1 Introduction. 5-1
5-4 Calibration Security 5-1
5-6 Security Code 5-1
5-8 Changing the Security Code 5-1
5-10 Calibration Number. 5-2
5-13 Preliminary Calibration Procedures 5-3
5-15 Input Amplifier Offset Adjustments. 5-4
5-17 AC Convertor Frequency Response Adjustment 5-4
5-19 Calibration Procedures - Front Panel Inputs. 5-5
5-21 DC Volts Offset Calibration 5-5
5-23 DC Volts Gain Calibration 5-6
5-25 DC Volts Linearity Calibration. . .5-6

TABLE OF CONTENTS (Cont'd)

Section V — Page

CALIBRATION (Cont'd)

5-27 2-Wire Ohms Offset Calibration . . . 5-8
5-29 2-Wire Ohms Gain Calibration 5-7
5-31 4-Wire Ohms Offset Calibration . . . 5-8
5-33 4-Wire Ohms Gain Calibration 5-9
5-35 DC Current Offset Calibration . . . 5-10
5-37 DC Current Gain Calibration. . . . 5-10
5-39 AC Volts Offset & Gain Calibration 5-11
5-41 AC Current Calibration. 5-11
5-43 Frequency Calibration 5-12
5-45 Calibration Procedures Rear Panel Inputs 5-12
5-47 DC Volts Offset Calibration 5-12
5-49 2-Wire Ohms Offset Calibration . . 5-13
5-51 4-Wire Ohms Offset Calibration . . 5-14
5-53 DC Current Offset Calibration . . . 5-14
5-55 Calibration Procedures - 44491A General Purpose Relay Assy . . . 5-15
5-56 Wiring Block Preparation. 5-15
5-58 DC Volts Offset Calibration 5-16
5-59 2-Wire Ohms Offset Calibration . . 5-17
5-60 4-Wire Ohms Offset Calibration . . 5-17
5-61 DC Current Offset Calibration . . . 5-17
5-62 Calibration Procedures - 44492A 10 Channel Multiplex Assy 5-18
5-63 Wiring Block Preparation. 5-18
5-65 DC Volts Offset Calibration 5-19
5-66 2-Wire Ohms Offset Calibration . . 5-19

Section VI — Page

REPLACABLE PARTS 6-1
6-1 Introduction. 6-1
6-3 Ordering Information 6-1
6-4 Listed Parts 6-1
6-6 Non-Listed Parts. 6-1
6-8 Direct Mail Order System 6-1
6-11 Part Changes 6-2

Section VI — Page

REPLACABLE PARTS (Cont'd)

6-13 Proprietary Parts 6-2
6-15 Disassembly/Assembly Procedures . .6-3
6-17 Rear Terminal Assembly Removal .6-3
6-19 Optional Plug-In Assembly Removal. 6-3
6-21 Top Cover Removal. 6-4
6-25 Digital (A1) Assembly Removal. . .6-4
6-27 Plug-In Support Assembly Removal. 6-5
6-29 AC Convertor (A3) Assembly Removal. 6-5
6-31 Analog (A2) Assembly Removal. . .6-5
6-33 Front Panel Removal 6-6

Section VII — Page

MANUAL CHANGES 7-1
7-1 Introduction. 7-1

Section VIII — Page

8-1 Introduction. 8-1
8-3 Safety Considerations 8-1
8-8 Static Handling 8-2
8-12 Recommended Test Equipment. . . .8-2
8-14 Theory of Operation 8-2
8-15 Introduction. 8-2
8-18 Chassis Common Section 8-2
8-23 Floating Comon Section. 8-3
8-32 Self Test Description 8-4
8-33 Power On Sequence 8-4
8-36 Self Test. 8-5
8-39 Troubleshooting. 8-5
8-40 Introduction. 8-5
8-42 A1 Assembly Failure Indications . .8-5
8-46 A2/A3 Assembly Failure Indications 8-6
8-50 Replacement Procedures 8-6

SECTION I
GENERAL INFORMATION

WARNING

The information contained in this manual is intended for the use of service trained personnel who understand electronic circuitry and are aware of the hazards involved. Do not attempt to perform any of the procedures outlined in this manual unless you are qualified to do so.

1-1. INTRODUCTION

1-2. This manual contains information relating to the installation, operation, performance testing, calibration, and service of the HP 3457A Multimeter. The information is designed for the use of service trained personnel. Other users should refer to the HP 3457A Operating Manual.

1-3. MANUAL DESCRIPTION

1-4. The following paragraphs provide a general description of the manual layout and content:

Section I. General Information

Section I contains a brief description of the manual, and a general description of the instrument. This section also contains the instrument specifications and information concerning options and accessories.

Section II. Installation Procedures

Section II contains information to prepare the HP 3457A for use. Included in this section is power requirements, line voltage selection, and interfacing information.

Section III. Operating Instructions

Section III contains operating instructions necessary to service the HP 3457A. These operating instructions are a condensed version of those contained in the Operating, Programming and Configuration Manual.

Section IV. Performance Tests

Section IV contains information and procedures required to test the HP 3457A to its rated specifications. Also included in this section is a condensed version of the performance test (operational verification test) which will provide a more rapid test and give a 90% confidence that the instrument will meet its specifications.

Section V. Calibration

Section V contains procedures required to calibrate the HP 3457A to its rated specifications.

Section VI. Replaceable Parts

Section VI lists part numbers for cabinet parts and printed circuit assemblies.

Section VII. Manual Backdating

Section VII contains information required to adapt this manual to instruments whose serial numbers are lower than those listed on the title page.

Section VIII. Service

Section VIII contains a block diagram theory of operation, schematic diagrams, and procedures to aid in troubleshooting the HP 3457A.

1-5. INSTRUMENT DESCRIPTION

1-6. The HP 3457A is a versatile high precision digital multimeter which measures ac or dc volts, ac or dc current, ac+dc volts or current, resistance, frequency and period. It measures voltages up to 300 Vac or 300 Vdc with high dc resolution and accuracy. The instrument is designed for both bench and system use. Program and reading storage are included to allow high speed measurement applications with reading rates of greater-than 1000 readings per second. Provision has been made for optional assemblies such as a general purpose scanner or multiplexer assembly.

1-7. SAFETY CONSIDERATIONS

1-8. The HP 3457A is a safety class 1 instrument (provided with a protective earth terminal). The instrument and manual should be reviewed for safety markings and instructions before operation. Refer to the Safety Summary preceding this section for appropriate safety instructions and markings covering this instrument.

1-9. INSTRUMENTS COVERED BY THIS MANUAL

1-10. Instruments covered by this manual are identified by a serial number prefix listed on the title page. Hewlett-Packard uses a two part serial number in the form XXXXAYYYYY, where XXXX is the serial prefix, A is the country of origin (A=USA) and YYYYY is the serial suffix. The serial number prefix identifies a series of identical instruments. The serial number suffix is assigned sequentially and is unique to each instrument.

1-11. If the serial number prefix of your instrument is greater than the one listed on the title page, a yellow Manual Changes supplement will explain how to adapt this manual to your instrument.

1-12. If the serial number prefix of your instrument is lower than the one listed on the title page, information contained in Section VII (Manual Backdating) will explain how to adapt this manual to your instrument.

1-13. SPECIFICATIONS

1-14. Specifications for the HP 3457A Multimeter are listed in Table 1-1. These specifications are the performance standards which the instrument is guaranteed to meet.

Table 1-1. Specifications

DC VOLTS

INPUT CHARACTERISTICS:

RANGE	MAXIMUM READING 6 1/2 digits	RESOLUTION 6 1/2 digits	5 1/2 digits	4 1/2 digits	3 1/2 digits
30 mV	30.30000 mV	10 nV	100 nV	1 uV	10 uV
300 mV	303.0000 mV	100 nV	1 uV	10 uV	100 uV
3 V	3.030000 V	1 uV	10 uV	100 uV	1 mV
30 V	30.30000 V	10 uV	100 uV	1 mV	10 mV
300 V	303.0000 V	100 uV	1 mV	10 mV	100 mV

INPUT RESISTANCE (OHMS):
30 millivolt through 3 volt range - 10 gigaohms
30 volt and 300 volt range - 10 megohms (+/- 1%)

MAXIMUM INPUT VOLTAGE: (non-destructive)
HI or LO to Earth Ground: ± 450V peak

MEASUREMENT ACCURACY: ±(% of reading + Number of Counts)
Auto-Zero ON

24 HOUR: Tcal ± 1°C 2 hour warm-up Accuracy relative to calibration standard
24 hour specifications apply if the instrument is calibrated between 90 and 100% of full-scale. For calibration between 33 and 90% of full-scale, add .00015% to % Reading.

RANGE	% READING	NUMBER OF COUNTS 100 PLC* 6 1/2 digits	10 PLC* 6 1/2 digits	1 PLC* 6 1/2 digits	.1 PLC* 5 1/2 digits	.005 PLC* 4 1/2 digits	.0005 PLC* 3 1/2 digits
30 mV	0.0012	215	235	350	55	17	6
300 mV	0.0005	24	25	35	7	4	4
3 V	0.00035	5	6	6	4	4	4
30 V	0.00065	9	10	20	6	4	4
300 V	0.0025	5	6	6	4	4	4

90 DAY: Tcal ± 5°C After 1 hour warm-up

RANGE	% READING	NUMBER OF COUNTS 100 PLC* 6 1/2 digits	10 PLC* 6 1/2 digits	1 PLC* 6 1/2 digits	.1 PLC* 5 1/2 digits	.005 PLC* 4 1/2 digits	.0005 PLC* 3 1/2 digits
30 mV	0.0040	365	385	500	70	19	6
300 mV	0.0025	39	40	50	9	4	4
3 V	0.0017	6	7	7	4	4	4
30 V	0.0035	19	20	30	7	4	4
300 V	0.0050	6	7	7	4	4	4

Table 1-1. Specifications

DC VOLTS (Cont'd)

1 YEAR: Tcal ± 5°C After 1 hour warm-up

RANGE	% READING	NUMBER OF COUNTS					
		100 PLC* 6 1/2 digits	10 PLC* 6 1/2 digits	1 PLC* 6 1/2 digits	.1 PLC* 5 1/2 digits	.005 PLC* 4 1/2 digits	.0005 PLC* 3 1/2 digits
30 mV	0.0045	365	385	500	70	19	6
300 mV	0.0035	39	40	50	9	4	4
3 V	0.0025	6	7	7	4	4	4
30 V	0.0040	19	20	30	7	4	4
300 V	0.0055	6	7	7	4	4	4

* PLC = Integration Time in Power Line Cycles. When using integration times of 100 PLC, 10 PLC, or 1PLC; multiply Number of Counts in the Measurement Accuracy Tables by 0.1 for 5 1/2 digit readings, 0.01 for 4 1/2 digit readings and 0.001 for 3 1/2 digit readings.
Tcal = the temperature of the environment where the 3457A was calibrated. Calibration should be performed with the environment temperature between 18 and 28 degrees centigrade.

TEMPERATURE COEFFICIENT: ±(% of Reading + Number of Counts)/°C
6 1/2 Digits Displayed

RANGE	Auto-Zero ON	Auto-Zero OFF*
30 mV	.0005 + 30	.0005 + 40
300 mV	.0005 + 3	.0005 + 13
3 V	.0005 + .3	.0005 + 10.3
30 V	.0005 + 1.0	.0005 + 11.0
300 V	.0005 + .3	.0005 + 10.3

* Specifications given are for a stable environment (± 1°C) and over a ten minute period. Multiply Number of Counts by 0.1 for 5 1/2 digit readings, 0.01 for 4 1/2 digit readings and 0.001 for 3 1/2 digit readings.

NOISE REJECTION:
With 1 Kohm imbalance in the LO lead and line frequency (50 or 60 Hz) ± 0.08%.

	INTEGRATION TIME					
	100 PLC	10 PLC	1 PLC	.1 PLC	.005 PLC	.0005 PLC
AC NMR	90 db	80 db	60 db	0 db	0 db	0 db
AC ECMR	160 db	156 db	136 db	76 db	76 db	76 db
DC CMR	140 db	140 db	140 db	140 db	140 db	140 db

Table 1-1. Specifications

DC VOLTS (Cont'd)

MAXIMUM READING RATES: (Readings/Second)

INTEGRATION TIME	DIGITS DISPLAYED	READING RATE 60 HZ	50 Hz
0.0005 PLC	3 1/2	1350	1350
0.005 PLC	4 1/2	1250	1250
0.1 PLC	5 1/2	360	312
1 PLC	6 1/2	53	45
10 PLC	6 1/2	4.8	4.0
100 PLC	6 1/2	.48	.40

Reading Rates apply with the keyboard lock ON, Auto-Zero OFF, Display OFF, Math Function OFF, Delay Time set to 0.0, Manual ranging, readings stored in internal memory using Timer Trigger and single precision integer format.

DC CURRENT

INPUT CHARACTERISTICS:

RANGE	MAXIMUM READING 6 1/2 digits	RESOLUTION 6 1/2 digits	5 1/2 digits	4 1/2 digits	3 1/2 digits	SHUNT RESISTANCE
300 uA	303.0000 uA	100 pA	1 nA	10 nA	100 nA	1000 Ohm
3 mA	3.030000 mA	1 nA	10 nA	100 nA	1 uA	100 Ohm
30 mA	30.30000 mA	10 nA	100 nA	1 uA	10 uA	10 Ohm
300 mA	303.0000 mA	100 nA	1 uA	10 uA	100 uA	1 Ohm
1 A	1.000000 A	1 uA	10 uA	100 uA	1 mA	.1 Ohm

MAXIMUM BURDEN VOLTAGE: 0.35V - 300uA, 3mA and 30mA ranges. 0.6V - 300mA range. 1 V - 1A range.

MEASUREMENT ACCURACY: ±(% of reading + Number of Counts)
After 1 hour warmup, with Auto-zero ON.

24 HOUR: Tcal ± 1°C After two hour warm-up. Accuracy relative to calibration standard.

RANGE	% READING	NUMBER OF COUNTS 100 PLC* 6 1/2 digits	10 PLC* 6 1/2 digits	1 PLC* 6 1/2 digits	.1 PLC* 5 1/2 digits	.005 PLC* 4 1/2 digits	.0005 PLC* 3 1/2 digits
300 uA	0.0020	54	54	65	9	5	4
3 mA	0.002	54	54	65	9	5	4
30 mA	0.0020	54	54	65	9	5	4
300 mA	0.03	154	154	165	19	6	4
1 A	0.03	504	504	515	54	9	5

Table 1-1. Specifications

DC CURRENT (Cont'd)

90 DAY: Tcal ± 5°C After one hour warm-up.

RANGE	% READING	NUMBER OF COUNTS					
		100 PLC* 6 1/2 digits	10 PLC* 6 1/2 digits	1 PLC* 6 1/2 digits	.1 PLC* 5 1/2 digits	.005 PLC* 4 1/2 digits	.0005 PLC* 3 1/2 digits
300 uA	0.020	104	104	115	14	5	4
3 mA	0.020	104	104	115	14	5	4
30 mA	0.020	104	104	115	14	5	4
300 mA	0.070	204	204	215	24	6	4
1 A	0.070	604	604	615	64	10	5

1 YEAR: Tcal ± 5°C After one hour warm-up.

RANGE	% READING	NUMBER OF COUNTS					
		100 PLC* 6 1/2 digits	10 PLC* 6 1/2 digits	1 PLC* 6 1/2 digits	.1 PLC* 5 1/2 digits	.005 PLC* 4 1/2 digits	.0005 PLC* 3 1/2 digits
300 uA	0.04	104	104	115	14	5	4
3 mA	0.04	104	104	115	14	5	4
30 mA	0.04	104	104	115	14	5	4
300 mA	0.08	204	204	215	24	6	4
1 A	0.08	604	604	615	64	10	5

* PLC = Integration Time in Power Line Cycles. When using integration times of 100 PLC, 10 PLC, or 1PLC; multiply Number of Counts in the Measurement Accuracy Tables by 0.1 for 5 1/2 digit readings, 0.01 for 4 1/2 digit readings and 0.001 for 3 1/2 digit readings.
Tcal = the temperature of the environment where the 3457A was calibrated. Calibration should be performed with the environment temperature between 18 and 28 degrees centigrade.

TEMPERATURE COEFFICIENT: ±(% of Reading + Number of Counts)/°C
6 1/2 Digits Displayed

RANGE	Auto-Zero ON	Auto-Zero OFF*
300 uA	.002 + 20	.002 + 30
3 mA	.002 + 20	.002 + 30
30 mA	.002 + 20	.002 + 30
300 mA	.007 + 20	.007 + 30
1 A	.007 + 20	.007 + 30

* Specifications given are for a stable environment (± 1°C) and over a ten minute period. Multiply Number of Counts by 0.1 for 5 1/2 digit readings, 0.01 for 4 1/2 digit readings and 0.001 for 3 1/2 digit readings.

Table 1-1. Specifications

DC CURRENT (Cont'd)

MAXIMUM READING RATES: (Readings/Second)

INTEGRATION TIME	DIGITS DISPLAYED	READING RATE 60 HZ	50 Hz
0.0005 PLC	3 1/2	1350	1350
0.005 PLC	4 1/2	1250	1250
0.1 PLC	5 1/2	360	312
1 PLC	6 1/2	53	45
10 PLC	6 1/2	4.8	4.0
100 PLC	6 1/2	.48	.40

Reading Rates apply with the keyboard lock ON, Auto-Zero OFF, Display OFF, Math Function OFF, Delay Time set to 0.0, Manual ranging, readings stored in internal memory using Timer Trigger and single precision integer format.

RESISTANCE
(2-Wire Ohms, 4-Wire Ohms, Offset Compensated Ohms)

INPUT CHARACTERISTICS:

RANGE (OHMS)	MAXIMUM READING 6 1/2 digits	RESOLUTION 6 1/2 digits	5 1/2 digits	4 1/2 digits	3 1/2 digits	CURRENT THROUGH UNKNOWN
30	30.30000 Ohm	10 uOhm	100 uOhm	1 mOhm	10 mOhm	1 mA
300	303.0000 Ohm	100 uOhm	1 mOhm	10 mOhm	100 mOhm	1 mA
3 k	3.030000KOhm	1 mOhm	10 mOhm	100 mOhm	1 Ohm	1 mA
30 k	30.30000KOhm	10 mOhm	100 mOhm	1 Ohm	10 Ohm	100 uA
300 k	303.0000KOhm	100 mOhm	1 Ohm	10 Ohm	100 Ohm	10 uA
3 M	3.030000MOhm	1 Ohm	10 Ohm	100 Ohm	1 KOhm	1 uA
30 M	30.30000MOhm	10 Ohm	100 Ohm	1 KOhm	10 KOhm	100 nA
300 M*	303.0000MOhm	100 Ohm	1 KOhm	10 KOhm	100 KOhm	100 nA
3 G*	3.030000GOhm	1 KOhm	10 KOhm	100 KOhm	1 MOhm	100 nA

* On the Extended Ohms ranges (300 MOhm & 3 GOhm), the current source is 100 nA in parallel with 10 MOhms.

INPUT PROTECTION: (non-destructive)
HI sense to LO sense: ±350V peak.
HI or LO to Earth ground: ±450V peak.

MAXIMUM OPEN CIRCUIT VOLTAGE:
30 Ohm to 3 Megohm ranges: 12 volts
30 Megohm to 3 Gigaohm ranges: 8.5 volts

Table 1-1. Specifications

RESISTANCE (Cont'd)

MEASUREMENT ACCURACY - FOUR-WIRE OHMS: ±(% of reading + Number of Counts)
Auto-zero ON.

24 HOUR: Tcal ± 1°C
After two hour warm-up. Accuracy relative to calibration standard.

RANGE (OHMS)	% READING	NUMBER OF COUNTS					
		100 PLC* 6 1/2 digits	10 PLC* 6 1/2 digits	1 PLC* 6 1/2 digits	.1 PLC* 5 1/2 digits	.005 PLC* 4 1/2 digits	.0005 PLC* 3 1/2 digits
30	0.003	215	235	350	55	17	6
300	0.0015	24	25	35	6	4	4
3 K	0.001	5	6	6	4	4	4
30 K	0.001	5	6	6	4	4	4
300 K	0.001	6	7	8	4	4	4
3 M	0.003	12	14	16	7	5	5
30 M	0.02	80	83	93	14	6	4

90 DAY: Tcal ± 5°C
After one hour warm-up.

RANGE (OHMS)	% READING	NUMBER OF COUNTS					
		100 PLC* 6 1/2 digits	10 PLC* 6 1/2 digits	1 PLC* 6 1/2 digits	.1 PLC* 5 1/2 digits	.005 PLC* 4 1/2 digits	.0005 PLC* 3 1/2 digits
30	0.0065	315	335	450	65	18	6
300	0.0045	34	35	45	8	4	4
3 K	0.0035	6	7	7	4	4	4
30 K	0.0035	6	7	7	4	4	4
300 K	0.004	7	8	9	4	4	4
3 M	0.0055	12	14	16	7	5	5
30 M	0.025	80	83	93	14	6	5

1 YEAR: Tcal ± 5°C
After one hour warm-up.

RANGE (OHMS)	% READING	NUMBER OF COUNTS					
		100 PLC* 6 1/2 digits	10 PLC* 6 1/2 digits	1 PLC* 6 1/2 digits	.1 PLC* 5 1/2 digits	.005 PLC* 4 1/2 digits	.0005 PLC* 3 1/2 digits
30	0.0075	315	335	450	65	18	6
300	0.0055	34	35	45	8	4	4
3 K	0.005	6	7	7	4	4	4
30 K	0.005	6	7	7	4	4	4
300 K	0.005	7	8	9	4	4	4
3 M	0.0065	12	14	16	7	5	5
30 M	0.04	80	83	93	14	6	5

Table 1-1. Specifications

RESISTANCE (Cont'd)

MEASUREMENT ACCURACY - TWO-WIRE OHMS: ±(% of reading + number of counts)
Auto-zero ON.

24 HOUR: Tcal ± 1°C
After two hour warm-up.

RANGE (OHMS)	% READING	NUMBER OF COUNTS					
		100 PLC* 6 1/2 digits	10 PLC* 6 1/2 digits	1 PLC* 6 1/2 digits	.1 PLC* 5 1/2 digits	.005 PLC* 4 1/2 digits	.0005 PLC* 3 1/2 digits
30	0.003	20215	20235	20350	20055	20017	20006
300	0.0015	2024	2025	2035	2006	2004	2004
3 K	0.001	205	206	206	204	204	204
30 K	0.001	25	26	26	24	24	24
300 K	0.001	8	9	10	6	6	6
3 M	0.003	12	14	16	7	5	5
30 M	0.02	80	83	93	14	6	4
300 M*	0.6	1000	1000	1000	100	10	1
3 G*	6.0	1000	1000	1000	100	10	1

* Specifications apply for a stable environment (±1°C) and after Ohms Auto-Cal (Auto-Cal 3).

90 DAY: Tcal ± 5°C
After one hour warm-up.

RANGE (OHMS)	% READING	NUMBER OF COUNTS					
		100 PLC* 6 1/2 digits	10 PLC* 6 1/2 digits	1 PLC* 6 1/2 digits	.1 PLC* 5 1/2 digits	.005 PLC* 4 1/2 digits	.0005 PLC* 3 1/2 digits
30	0.0065	20315	20335	20450	20065	20018	20006
300	0.0045	2034	2035	2045	2008	2004	2004
3 K	0.0035	206	207	207	204	204	204
30 K	0.0035	26	27	27	24	24	24
300 K	0.004	9	10	11	6	6	6
3 M	0.0055	12	14	16	7	5	5
30 M	0.025	80	83	93	14	6	5
300 M	1.6	1000	1000	1000	100	10	1
3 G	16.0	1000	1000	1000	100	10	1

Table 1-1. Specifications

RESISTANCE (Cont'd)

1 YEAR: Tcal ± 5°C
After one hour warm-up.

RANGE (OHMS)	% READING	NUMBER OF COUNTS					
		100 PLC* 6 1/2 digits	10 PLC* 6 1/2 digits	1 PLC* 6 1/2 digits	.1 PLC* 5 1/2 digits	.005 PLC* 4 1/2 digits	.0005 PLC* 3 1/2 digits
30	0.0075	20315	20335	20450	20065	20018	20006
300	0.0055	2034	2035	2045	2008	2004	2004
3 K	0.005	206	207	207	204	204	204
30 K	0.005	26	27	27	24	24	24
300 K	0.005	9	10	11	6	6	6
3 M	0.0065	12	14	16	7	5	5
30 M	0.04	80	83	93	14	6	5
300 M	1.6	1000	1000	1000	100	10	1
3 G	16.0	1000	1000	1000	100	10	1

* PLC = Integration Time in Power Line Cycles. When using integration times of 100 PLC, 10 PLC, or 1PLC; multiply Number of Counts in the Measurement Accuracy Tables by 0.1 for 5 1/2 digit readings, 0.01 for 4 1/2 digit readings and 0.001 for 3 1/2 digit readings.
Tcal = the temperature of the environment where the 3457A was calibrated. Calibration should be performed with the environment temperature between 18 and 28 degrees centigrade.

TEMPERATURE COEFFICIENT: ±(% of Reading + Number of Counts)/°C
6 1/2 Digits Displayed

RANGE	Auto-Zero ON	Auto-Zero OFF*
30	.0005 + 500	.0005 + 510
300	.0005 + 50	.0005 + 60
3 K	.0005 + 5	.0005 + 15
30 K	.0005 + 5	.0005 + 15
300 K	.0008 + 5	.0008 + 15
3 M	.0010 + 5	.0010 + 15
30 M	.0025 + 5	.0025 + 15
300 M	.3500 + 0	.3500 + 10
3 G	3.5000 + 0	3.5000 + 10

* Specifications given are for a stable environment (± 1°C) and over a ten minute period. For integration times of >= 1 PLC, multiply Number of Counts by 0.1 for 5 1/2 digit readings, 0.01 for 4 1/2 digit readings and 0.001 for 3 1/2 digit readings.

Table 1-1. Specifications

RESISTANCE (Cont'd)

RANGE (OHMS)	MAXIMUM LEAD RESISTANCE FOUR-WIRE OHMS	MAXIMUM OFFSET VOLTAGE FOR OFFSET COMPENSATED OHMS (FULL SCALE)	PRE-PROGRAMMED SETTLING TIME
30	1 Ohm	1 mV	560 usec
300	10 Ohm	10 mV	350 usec
3 K	100 Ohm	100 mV	350 usec
30 K	1 KOhm	not applicable	350 usec
300 K	10 KOhm	not applicable	2.4 msec
3 M	100 KOhm	not applicable	24 msec
30 M	1 MOhm	not applicable	240 msec
300 M	not applicable	not applicable	2.4 sec
3 G	not applicable	not applicable	2.5 sec

RESPONSE TIME:

First reading meets accuracy specification with pre-programmed settling times and <200 pF circuit capacitance. An additional delay of 0.1 seconds is necessary after a range or function change to meet rated accuracy.

MAXIMUM READING RATES: (Readings/Second)

30 Ohm to 30 KOhm ranges

INTEGRATION TIME	DIGITS DISPLAYED	READING RATE 60 HZ	50 Hz
0.0005 PLC	3 1/2	1350	1350
0.005 PLC	4 1/2	1250	1250
0.1 PLC	5 1/2	360	312
1 PLC	6 1/2	53	45
10 PLC	6 1/2	4.8	4.0
100 PLC	6 1/2	.48	.40

Reading Rates apply with the keyboard lock ON, Auto-Zero OFF, Display OFF, Math Function OFF, Delay Time set to 0.0, Manual ranging, readings stored in internal memory using Timer Trigger and single precision integer format.

Table 1-1. Specifications

TRUE RMS AC VOLTAGE
(AC and DC Coupled)

INPUT CHARACTERISTICS:

RANGE	MAXIMUM READING 6 1/2 digits	RESOLUTION 6 1/2 digits	5 1/2 digits	4 1/2 digits	3 1/2 digits
30 mV	32.50000 mV	10 nV	100 nV	1 uV	10 uV
300 mV	325.0000 mV	100 nV	1 uV	10 uV	100 uV
3 V	3.250000 V	1 uV	10 uV	100 uV	1 mV
30 V	32.50000 V	10 uV	100 uV	1 mV	10 mV
300 V	303.0000 V	100 uV	1 mV	10 mV	100 mV

INPUT IMPEDANCE:
1 megohm ±1% shunted by < 90 pF (< 115 pF rear input).

MAXIMUM INPUT VOLTAGE: (non-destructive)
Input Terminals: ± 450V peak.
HI or LO to Earth Ground: ± 450V peak.

CREST FACTOR: 3.5 to 1 at full-scale.

MEASUREMENT ACCURACY - AC COUPLED: ±(% of reading + number of counts)

Specifications apply for sine-wave inputs > 10% of range with DC component < 10% of the AC component, with Auto-zero ON, AC slow filter ON (ACBAND 20), and after 2 hour warm-up.

For AC inputs between 3% and 10% of full-scale and < 20KHz, add 0.7% to the percent of reading figures.

For pre-programmed settling times, add .1% of input voltage step to accuracy specifications for the first reading.

24 HOUR: Tcal ± 1°C (ACV Function) After 2 hour warm-up Accuracy relative to calibration standard 30 mV to 30 V ranges.

FREQUENCY	PERCENT OF READING	NUMBER OF COUNTS >= 1 PLC 6 1/2 digits	0.1 PLC 5 1/2 digits	.005 PLC 4 1/2 digits	.0005 PLC 3 1/2 digits
20Hz-45Hz	0.5	720	76	12	6
45Hz-100Hz	0.15	720	76	12	6
100Hz-20KHz	0.07	720	76	12	6
** 400Hz-20KHz	0.08	720	510	55	10
20KHz-100KHz	0.6	1700	184	23	7
100KHz-300KHz	3.1	9300	934	98	14
300KHz-1MHz	10.1	66000	6600	664	71

Table 1-1. Specifications

TRUE RMS AC VOLTAGE (Cont'd)

24 HOUR: Tcal ± 1°C (ACV Function) After 2 hour warm-up Accuracy relative to calibration standard
300 V range.

FREQUENCY	PERCENT OF READING	NUMBER OF COUNTS >= 1 PLC 6 1/2 digits	0.1 PLC 5 1/2 digits	.005 PLC 4 1/2 digits	.0005 PLC 3 1/2 digits
20Hz-45Hz	0.56	720	76	12	6
45Hz-100Hz	0.21	720	76	12	6
100Hz-20KHz	0.13	720	76	12	6
** 400Hz-20KHz	0.14	720	510	55	10
20KHz-100KHz	1.0	3300	334	38	8

90 DAY: Tcal ± 5°C (ACV Function) After 1 hour warm-up
30 mV to 30 V ranges.

FREQUENCY	* PERCENT OF READING	NUMBER OF COUNTS >= 1 PLC 6 1/2 digits	0.1 PLC 5 1/2 digits	.005 PLC 4 1/2 digits	.0005 PLC 3 1/2 digits
20Hz-45Hz	0.56	1120	116	16	6
45Hz-100Hz	0.21	1120	116	16	6
100Hz-20KHz	0.13	1120	116	16	6
** 400Hz-20KHz	0.14	1120	550	59	10
20KHz-100KHz	0.66	2100	224	27	7
100KHz-300KHz	3.16	9700	974	102	14
300KHz-1MHz	10.16	66400	6640	668	71

90 DAY: Tcal ± 5°C (ACV Function) After 1 hour warm-up
300 V range.

FREQUENCY	* PERCENT OF READING	NUMBER OF COUNTS >= 1 PLC 6 1/2 digits	0.1 PLC 5 1/2 digits	.005 PLC 4 1/2 digits	.0005 PLC 3 1/2 digits
20Hz-45Hz	0.62	1120	116	16	6
45Hz-100Hz	0.27	1120	116	16	6
100Hz-20KHz	0.19	1120	116	16	6
** 400Hz-20KHz	0.2	1120	550	59	10
20KHz-100KHz	1.06	3700	374	42	8

* Specifications apply within one week of AC auto-cal (ACAL 2) for stable temperature conditions. (Tcal ±5°C). If AC auto-cal is not used, add 0.6 to the percent of reading figures.

** Using AC fast filter (ACBAND 400) for frequencies above 400Hz.

For 1 year specifications, add .1% to 24 hour percent of reading figures, add 600 to 6 1/2 digit counts, add 60 to 5 1/2 digit counts, add 6 to 4 1/2 digit counts, add .6 to 3 1/2 digit counts (Tcal ±5°C).

Table 1-1. Specifications

TRUE RMS AC VOLTAGE (Cont'd)

TEMPERATURE COEFFICIENT - AC COUPLED: All Ranges.

FREQUENCY	PERCENT READING	NUMBER OF COUNTS 6 1/2 digits	5 1/2 digits	4 1/2 digits	3 1/2 digits
* 20Hz-100KHz	0.01	150	15	1.5	0.15
100KHz-1MHz	0.08	300	30	3	0.3

* For AC inputs between 3% and 10% of full-scale and < 20KHz, add .04% to percent reading.

MEASUREMENT ACCURACY - DC COUPLED: ±(% of reading + number of counts)

Accuracy specified for sine-wave inputs > 10% of range with DC component < 10% of the AC component from a source impedance of <10 KOhms, with Auto-zero ON, AC slow filter ON (ACBAND 20), and after 2 hr warm-up. For DC component >10% of the AC component, allow an additional 1.5 sec. settling time for correct first reading, add .14% to the applicable percent of reading figures, add 23000 to the 6 1/2 digit counts, add 2300 to the 5 1/2 digit counts, add 230 to the 4 1/2 digit counts, add 23 to the 3 1/2 digit counts.

For pre-programmed settling times, add .1% of input voltage step to accuracy specifications for the first reading.

24 HOUR: Tcal ± 1°C (ACDCV Function) After 2 hour warm-up Accuracy relative to calibration std 30 mV to 30 V ranges

FREQUENCY	PERCENT OF READING	NUMBER OF COUNTS >= 1 PLC 6 1/2 digits	0.1 PLC 5 1/2 digits	.005 PLC 4 1/2 digits	.0005 PLC 3 1/2 digits
20Hz-45Hz	1.3	1500	154	20	6
45Hz-100Hz	0.11	1500	154	20	6
100Hz-20KHz	0.11	1500	154	20	6
** 400Hz-20KHz	0.38	1500	2600	264	31
20KHz-100KHz	0.6	2520	256	30	7
100KHz-300KHz	3.1	9300	934	98	14
300KHz-1MHz	10.1	67500	6750	680	72

24 HOUR: Tcal ± 1°C (ACDCV Function) After 2 hour warm-up Accuracy relative to calibration std 300 V range

FREQUENCY	PERCENT OF READING	NUMBER OF COUNTS >= 1 PLC 6 1/2 digits	0.1 PLC 5 1/2 digits	.005 PLC 4 1/2 digits	.0005 PLC 3 1/2 digits
20Hz-45Hz	1.3	1500	154	20	6
45Hz-100Hz	0.17	1500	154	20	6
100Hz-20KHz	0.17	1500	154	20	6
** 400Hz-20KHz	0.44	1500	2600	264	31
20KHz-100KHz	1.1	4320	440	48	9

Table 1-1. Specifications

TRUE RMS AC VOLTAGE (Cont'd)

90 DAY: Tcal ± 5°C (ACDCV Function) After 1 hour warm-up
30 mV to 300 V ranges

FREQUENCY	* PERCENT OF READING	NUMBER OF COUNTS >= 1 PLC 6 1/2 digits	0.1 PLC 5 1/2 digits	.005 PLC 4 1/2 digits	.0005 PLC 3 1/2 digits
20Hz-45Hz	1.36	3600	364	41	8
45Hz-100Hz	0.17	3600	364	41	8
100Hz-20KHz	0.17	3600	364	41	8
** 400Hz-20KHz	0.44	3600	2810	285	33
20KHz-100KHz	0.66	4620	466	51	9
100KHz-300KHz	3.16	11400	1144	119	16
300KHz-1MHz	10.16	69600	6960	701	74

90 DAY: Tcal ± 1°C (ACDCV Function) After 1 hour warm-up
300 V range

FREQUENCY	PERCENT OF READING	NUMBER OF COUNTS >= 1 PLC 6 1/2 digits	0.1 PLC 5 1/2 digits	.005 PLC 4 1/2 digits	.0005 PLC 3 1/2 digits
20Hz-45Hz	1.36	3600	364	41	8
45Hz-100Hz	0.23	3600	364	41	8
100Hz-20KHz	0.23	3600	364	41	8
** 400Hz-20KHz	0.5	3600	2810	285	33
20KHz-100KHz	1.16	6420	650	69	11

* Specifications apply within one week of AC auto-cal (ACAL 2) for stable temperature conditions (Tcal ±5°C). If AC auto-cal is not used, add 0.6 to the percent of reading figures, add 39000 to the 6 1/2 digit counts, add 3900 to the 5 1/2 digit counts, add 390 to the 4 1/2 digit counts and 39 to the 3 1/2 digit counts.

** Using AC fast filter (ACBAND 400) for frequencies above 400Hz.

For 1 year specifications, add .1% to 24 hour percent of reading figures, add 2100 to 6 1/2 digit counts, add 210 to the 5 1/2 digit counts, add 21 to the 4 1/2 digit counts, add 2.1 to the 3 1/2 digit counts.

TEMPERATURE COEFFICIENT - DC COUPLED: 300 mV, 30 V and 300 V ranges.

FREQUENCY	PERCENT READING	NUMBER OF COUNTS 6 1/2 digits	5 1/2 digits	4 1/2 digits	3 1/2 digits
20Hz-100KHz	0.01	1000	100	10	1.0
101KHz-1MHz	0.08	1300	130	13	1.3

Table 1-1. Specifications

TRUE RMS AC VOLTAGE (Cont'd)

TEMPERATURE COEFFICIENT - DC COUPLED: 30 mV and 3 V ranges.

FREQUENCY	PERCENT READING	NUMBER OF COUNTS 6 1/2 digits	5 1/2 digits	4 1/2 digits	3 1/2 digits
20Hz-100KHz	0.01	5700	570	57	5.7
101KHz-1MHz	0.08	6000	600	60	6.0

COMMON MODE REJECTION:
With 1 KOhm imbalance in LO lead, > 76 db from DC to 60 Hz.

MAXIMUM READING RATES: (Readings/Second)

INTEGRATION TIME	DIGITS DISPLAYED	READING RATE * AC SLOW RESPONSE 60 Hz	50 Hz	* AC FAST RESPONSE 60 Hz	50 Hz
0.0005 PLC	3 1/2	1.0	1.0	9.5	9.5
0.005 PLC	4 1/2	1.0	1.0	9.5	9.5
0.1 PLC	5 1/2	1.0	1.0	9.25	9.2
1 PLC	6 1/2	1.0	1.0	7.25	6.9
10 PLC	6 1/2	0.7	0.65	2.0	1.7
100 PLC	6 1/2	0.2	0.17	0.25	0.2

Reading Rates apply with Auto-zero ON, fixed range and preprogrammed settling times.
* ACBAND set to < 400 for AC slow response and set to > 400 for AC fast response.

TRUE RMS AC CURRENT (AC and DC Coupled)

INPUT CHARACTERISTICS:

RANGE	MAXIMUM READING 6 1/2 digits	RESOLUTION => 1 PLC 6 1/2 digits	0.1 PLC 5 1/2 digits	.005 PLC 4 1/2 digits	.0005 PLC 3 1/2 digits
30 mA	32.50000 mA	10 nA	100 nA	1 uA	10 uA
300 mA	325.0000 mA	100 nA	1 uA	10 uA	100 uA
1 A	1.000000 A	1 uA	10 uA	100 uA	1 mA

MAXIMUM INPUT: (non-destructive)
1.5 Amps from 250 volt source. Input is fuse protected.

MAXIMUM BURDEN VOLTAGE:
1 Vrms at 1 Arms input for frequencies < 20 KHz.

CREST FACTOR: > 3.5 to 1 at full-scale.

Table 1-1. Specifications

TRUE RMS AC CURRENT (Cont'd)

MEASUREMENT ACCURACY - AC COUPLED: ±(% of reading + number of counts)
After two hour warm-up.
Sine-wave inputs > 10% of range.
AC slow filter ON (ACBAND 20).
Auto-zero ON.
For pre-programmed settling times, error is < 0.1% of input current step.

24 HOUR: Tcal ± 1°C (ACI Function) After 2 hour warm-up Accuracy relative to calibration standard
30 mA and 300 mA ranges.

FREQUENCY	PERCENT OF READING	NUMBER OF COUNTS >= 1 PLC 6 1/2 digits	0.1 PLC 5 1/2 digits	.005 PLC 4 1/2 digits	.0005 PLC 3 1/2 digits
20Hz-45Hz	0.8	2800	290	32	7
46Hz-100Hz	0.25	2800	290	32	7
101Hz-20KHz	0.2	2800	290	32	7
** 400Hz-20KHz	0.2	2800	750	80	12
21KHz-100KHz	0.9	4000	400	42	8

24 HOUR: Tcal ± 1°C (ACI Function) After 2 hour warm-up Accuracy relative to calibration standard
1 A range. (1 amp maximum input)

FREQUENCY	PERCENT OF READING	NUMBER OF COUNTS >= 1 PLC 6 1/2 digits	0.1 PLC 5 1/2 digits	.005 PLC 4 1/2 digits	.0005 PLC 3 1/2 digits
20Hz-45Hz	0.9	2800	290	32	7
46Hz-100Hz	0.35	2800	290	32	7
101Hz-20KHz	0.30	2800	290	32	7
** 400Hz-20KHz	0.30	2800	750	80	12

90 DAY: Tcal ± 5°C (ACI Function) After 1 hour warm-up
30 mA and 300 mA ranges.

FREQUENCY	* PERCENT OF READING	NUMBER OF COUNTS >= 1 PLC 6 1/2 digits	0.1 PLC 5 1/2 digits	.005 PLC 4 1/2 digits	.0005 PLC 3 1/2 digits
20Hz-45Hz	0.85	2800	290	32	7
46Hz-100Hz	0.3	2800	290	32	7
101Hz-20KHz	0.25	2800	290	32	7
** 400Hz-20KHz	0.25	2800	750	80	12
21KHz-100KHz	1.0	4000	400	42	8

Table 1-1. Specifications

TRUE RMS AC CURRENT (Cont'd)

90 DAY: Tcal ± 5°C (ACI Function) After 1 hour warm-up
1 A range. (1 amp maximum input)

FREQUENCY	* PERCENT OF READING	NUMBER OF COUNTS >= 1 PLC 6 1/2 digits	0.1 PLC 5 1/2 digits	.005 PLC 4 1/2 digits	.0005 PLC 3 1/2 digits
20Hz-45Hz	.95	2800	290	32	7
46Hz-100Hz	0.4	2800	290	32	7
101Hz-20KHz	0.35	2800	290	32	7
** 400Hz-20KHz	0.35	2800	750	80	12

* Specifications apply within one week of AC auto-cal (ACAL 2) for stable temperature conditions. If AC auto-cal is not used, add 0.6 to the percent of reading figures. For 1 year specifications, add .08% to the 90 day Percent of Reading figures.
** Using AC fast filter (ACBAND 400) for frequencies above 400Hz.

TEMPERATURE COEFFICIENT - AC COUPLED: All Ranges.

FREQUENCY	PERCENT READING	NUMBER OF COUNTS 6 1/2 digits	5 1/2 digits	4 1/2 digits	3 1/2 digits
20Hz-100KHz	0.017	150	15	1.5	0.15

MEASUREMENT ACCURACY - DC COUPLED: ±(% of reading + number of counts)
After two hour warm-up.
Sine-wave inputs > 10% of range.
AC slow filter ON (ACBAND 20).
Auto-zero ON.
For pre-programmed settling times, error is 0.1% of input current step.

24 HOUR: Tcal ± 1°C (ACDCI Function) After 2 hour warm-up Accuracy relative to calibration std
30 mA and 300 mA ranges.

FREQUENCY	PERCENT OF READING	NUMBER OF COUNTS >= 1 PLC 6 1/2 digits	0.1 PLC 5 1/2 digits	.005 PLC 4 1/2 digits	.0005 PLC 3 1/2 digits
20Hz-45Hz	1.5	16000	1600	165	20
46Hz-100Hz	0.35	16000	1600	165	20
101Hz-20KHz	0.25	16000	1600	165	20
** 400Hz-20KHz	0.6	16000	3750	375	42
21KHz-100KHz	0.9	17500	1750	180	22

Table 1-1. Specifications

TRUE RMS AC CURRENT (Cont'd)

24 HOUR: Tcal ± 1°C (ACDCI Function) After 2 hour warm-up Accuracy relative to calibration std
1 A range. (1 amp maximum input)

FREQUENCY	PERCENT OF READING	NUMBER OF COUNTS >= 1 PLC 6 1/2 digits	0.1 PLC 5 1/2 digits	.005 PLC 4 1/2 digits	.0005 PLC 3 1/2 digits
20Hz-45Hz	1.6	16000	1600	165	20
46Hz-100Hz	0.45	16000	1600	165	20
101Hz-20KHz	0.35	16000	1600	165	20
** 400Hz-20KHz	0.7	16000	3750	375	42

90 DAY: Tcal ± 5°C (ACDCI Function) After 1 hour warm-up
30 mA and 300 mA ranges.

FREQUENCY	* PERCENT OF READING	NUMBER OF COUNTS >= 1 PLC 6 1/2 digits	0.1 PLC 5 1/2 digits	.005 PLC 4 1/2 digits	.0005 PLC 3 1/2 digits
20Hz-45Hz	1.55	16000	1600	165	20
46Hz-100Hz	0.4	16000	1600	165	20
101Hz-20KHz	0.3	16000	1600	165	20
** 400Hz-20KHz	0.65	16000	3750	375	42
21KHz-100KHz	0.95	17500	1750	180	22

90 DAY: Tcal ± 1°C (ACDCI Function) After 1 hour warm-up
1 A range. (1 amp maximum input)

FREQUENCY	* PERCENT OF READING	NUMBER OF COUNTS >= 1 PLC 6 1/2 digits	0.1 PLC 5 1/2 digits	.005 PLC 4 1/2 digits	.0005 PLC 3 1/2 digits
20Hz-45Hz	1.65	16000	1600	165	20
46Hz-100Hz	0.5	16000	1600	165	20
101Hz-20KHz	0.4	16000	1600	165	20
** 400Hz-20KHz	0.75	16000	3750	375	42

* Specifications apply within one week of AC auto-cal (ACAL 2) for stable temperature conditions. If AC auto-cal is not used, add 0.6 to the percent of reading figures, add 6000 to the 6 1/2 digit counts, add 600 to the 5 1/2 digit counts, add 60 to the 4 1/2 digit counts and 6 to the 3 1/2 digit counts.
For 1 year specifications, add .08% to the 90 day Percent of Reading figures.
** Using AC fast filter (ACBAND 400) for frequencies above 400Hz.

Table 1-1. Specifications

TRUE RMS AC CURRENT (Cont'd)

TEMPERATURE COEFFICIENT - DC COUPLED: All Ranges.

FREQUENCY	PERCENT READING	NUMBER OF COUNTS 6 1/2 digits	5 1/2 digits	4 1/2 digits	3 1/2 digits
20Hz-100KHz	0.017	1500	150	15	1.5

MAXIMUM READING RATES: (Readings/Second)

INTEGRATION TIME	DIGITS DISPLAYED	READING RATE * AC SLOW RESPONSE 60 Hz	50 Hz	* AC FAST RESPONSE 60 Hz	50 Hz
0.0005 PLC	3 1/2	1.0	1.0	9.5	9.5
0.005 PLC	4 1/2	1.0	1.0	9.5	9.5
0.1 PLC	5 1/2	1.0	1.0	9.25	9.2
1 PLC	6 1/2	1.0	1.0	7.25	6.9
10 PLC	6 1/2	0.7	0.65	2.0	1.7
100 PLC	6 1/2	0.2	0.17	0.25	0.2

Reading Rates apply with Auto-zero ON, fixed range and preprogrammed settling times.
* ACBAND set to < 400 for AC slow response and set to > 400 for AC fast response.

FREQUENCY AND PERIOD

Measures the frequency or period of the ac component of ac or dc coupled voltage or current. The counter uses a reciprocal counting technique to provide constant resolution independent of the input frequency.

INPUT IMPEDANCE:
1 megohm shunted by < 90 picofarads.

MAXIMUM INPUTS:
Voltage:
Input Terminals - ± 450V peak.
HI or LO to Earth Ground - ± 450V peak.
Current:
1.5 amps from 250 volt source. Input is fuse protected.

FREQUENCY RANGE:
Voltage Function - 10Hz to 1.5MHz
Current Function - 10Hz to 100KHz

PERIOD RANGE:
Voltage Function - 100msec to 667nsec
Current Function - 100msec to 10usec

Table 1-1. Specifications

FREQUENCY AND PERIOD (Cont'd)

SENSITIVITY:
10mV rms or 100uA rms sine-wave

TRIGGERING:
Triggers and counts on zero crossings.

MEASUREMENT ACCURACY: ±(% of reading)

FREQUENCY	PERIOD	% OF READING
10Hz - 400Hz	100msec - 2.5msec	0.05
400Hz - 1.5MHz	2.5msec - 667nsec	0.01

MAXIMUM READING RATE:
2 readings/second (Integration time of 1 PLC, fast settling time, delay zero and math OFF, and fixed range)

PLUG-IN OPTION
44491A Armature Relay Multiplexer Assembly

INPUT CHARACTERISTICS:
Eight two-wire armature relay channels and two current/actuator channels.

MAXIMUM VOLTAGE: (Terminal to Terminal or Terminal to Chassis)
250 VDC or 250 VAC rms

MAXIMUM CURRENT: (per channel)
1 amp DC or AC rms

THERMAL OFFSET:
< 3 microvolts

RELAY LIFE:
10^7 operations at maximum load (1.5 amps AC rms).

CLOSED CHANNEL RESISTANCE: (end of relay life)
< 2 ohms

MAXIMUM SWITCHING AND MEASUREMENT SPEED:
33 channels/second

ADJACENT CHANNEL CROSSTALK: (Channels terminated into 50 ohms)
-60 db @ 100KHz

Table 1-1. Specifications

PLUG-IN OPTION
44491A Armature Relay Multiplexer Assembly (Cont'd)

DC ISOLATION:
- Channels 0 - 7 (40°C, 95% Relative Humidity) 10^{10} Ohms
- Channels 8 and 9 (40°C, 95% Relative Humidity) 10^{9} Ohms
- Channels 0 - 7 (40°C, 60% Relative Humidity) 10^{11} Ohms
- Channels 8 and 9 (40°C, 60% Relative Humidity) 10^{10} Ohms

AC ISOLATION:
- Channels 0 - 7 Closed: 150 pF
- Channels 0 - 7 Open: 10 pF
- LO to Chassis: 420 pF

PLUG-IN OPTION
44492A Reed Relay Multiplexer Assembly

INPUT CHARACTERISTICS:
Ten two-wire reed relay channels.

MAXIMUM VOLTAGE: (Terminal to Terminal or Terminal to Chassis)
125 volts peak to peak.

THERMAL OFFSET:
3 microvolts.

RELAY LIFE:
10^{7} operations at maximum load (125 VAC peak to peak).

CLOSED CHANNEL RESISTANCE: (end of relay life)
< 4 ohms

MAXIMUM SWITCHING AND MEASUREMENT SPEED:
300 channels/second

ADJACENT CHANNEL CROSSTALK: (Channels terminated into 50 ohms)
-40 db @ 100KHz

DC ISOLATION:
- Channels 0 - 9 (40°C, Relative Humidity 95%) 10^{9} Ohms
- Channels 0 - 9 (40°C, 60% Relative Humidity) 10^{10} Ohms

AC ISOLATION:
- Channels 0 - 9 Closed: 200 pF
- Channels 0 - 9 Open: 15 pF
- LO to Chassis: 420 pF

44492A operation is not specified for the 30 Ohm range or for frequencies above 100 KHz.

Table 1-1. Specifications

GENERAL

OPERATING TEMPERATURE:
0° to 55° C

STORAGE TEMPERATURE:
-40° to +75° C

WARM-UP TIME:
One hour to meet all specifications, except where noted.

HUMIDITY RANGE:
95% relative humidity for temperatures between 0° and 40° C.

POWER REQUIREMENTS:
100/120/240 volts ±10%, 48Hz to 66Hz. 30 VA maximum.

DIMENSIONS:
Height - 89mm (3.5 ") (With feet removed), 100mm (4 ") (With feet)
Width - 425mm (16.75 ")
Depth - 292mm (11.5 ")
Allow 76mm (3 ") additional depth for wiring.

NET WEIGHT:
5.05 kgm (11.1 lbs)

SHIPPING WEIGHT:
9.3 kgm (20.5 lbs)

1-15. OPTIONS AND ACCESSORIES

1-16. Table 1-2. lists the options and accessories available for the HP 3457A Digital Multimeter.

Table 1-2. Available Options and Accessories

OPTION NUMBER Use this number when ordering with the HP 3457A	ACCESSORY NO. Use this number when ordering separately	DESCRIPTION of Option or Accessory
HP 44491A	HP 44491A	General Purpose Plug-in Assembly
HP 44492A	HP 44492A	10 Channel Multiplexer Assembly
HP 44493A	HP 44493A	Extra Wiring Block for 44491A
HP 44494A	HP 44494A	Extra Wiring Block for 44492A
Option 401	5061-1171	Side Handle Kit
Option 907	5061-1170	Front Handle Kit
Option 908	5061-1168	Rack Mount Kit
Option 909	5061-1169	Rack Mount with Front Handle
Option 910	Order by Part No.	Additional Set of 3457A Manuals
Option W30		2 Additional years of Return to HP hardware support
10833A	10833A	HP-IB Cable 1.0 meter (39.37 in)
10833B	10833B	HP-IB Cable 2.0 meter (78.74 in)
10833C	10833C	HP-IB Cable 4.0 meter (157.5 in)
10833D	10833D	HP-IB Cable 0.5 meter (19.69 in)
34118	34118	Test Lead Kit
11096B	11096B	RF Probe (700MHz)
34111A	34111A	High Voltage Probe (40KVdc)
HP 44414A	HP 44414A	Pack of 4 Thermistors
03457-10085	03457-10085	Calibration Software for HP 85B
03457-10200	03457-10200	Calibration Software for HP 200

1-17. TEST EQUIPMENT

1-18. Table 1-3 lists requirements for service equipment necessary to calibrate and repair the Model HP 3457A.

Table 1-3. Test Equipment Requirements

INSTRUMENT	CRITICAL SPECIFICATIONS	SUGGESTED MODEL	USE
DC VOLTAGE SOURCE	30mV ±.0055%, 300mV ±.0012% 1V, 2V & 3V ±.0006%, 30V ±.0013%, 300V ±.0017%	Datron Model 4000A	PAT
DC CURRENT SOURCE	300uA, 3mA & 30mA ±.007% 300mA ±.026%, 1A ±.04%	Datron Model 4000A	PAT
AC VOLTAGE SOURCE	1MHz - 30mVrms ±10%, 300mVrms & 3Vrms ±3% 300KHz - 30mVrms ±2%, 300mVrms & 3Vrms ±1% 100KHz - 30mVrms ±.6%, 300mVrms & 3Vrms ±.2% 20KHz - 30mVrms ±.3%, 300mVrms & 3Vrms ±.2% 6.5KHz - 30mVrms ±.3%, 300mVrms & 3Vrms ±.2% 1KHz - 30mVrms, 300mVrms, 1Vrms, 2Vrms, 3Vrms, 30Vrms & 300Vrms ±.1% 400Hz - 30mVrms ±.3%, 300mVrms & 3Vrms ±.2% 100Hz - 300mVrms & 3Vrms ±.1% 45Hz - 300mVrms & 3Vrms ±.3% 20Hz - 300mVrms & 3Vrms ±.3%	Datron Model 4200	PAT
AC CURRENT SOURCE	1KHz -30mA & 300mA ±.14%, 1A ±.24%	Datron Model 4200	PAT
RESISTANCE STANDARD	30ohms ±.004%, 300ohms ±.002%, 3Kohms ±.001% 30Kohm, 300Kohm & 3Mohm ±.001%, 30Mohm ±.009%	Datron Model 4000A	PAT
FREQUENCY SOURCE	20Hz ±.016%, 1MHz ±.003%	Datron Model 4200 or HP Model 3325A	PAT
FREQUENCY COUNTER	5Hz to 1.5MHz ±.003%	HP Model 3457A or HP Model 5314A	PAT
DIGITAL MULTIMETER		HP Model 3456A or HP Model 3457A	PAT
OSCILLOSCOPE		HP Model 1740A	T

P = Performance Test A = Adjustment T = Troubleshooting

SECTION II
INSTALLATION

2-1. INTRODUCTION

2-2. This section contains information to aid in the installation and interfacing of the HP 3457A Digital Multimeter. This section also includes initial inspection procedures, power requirements, environmental information, and instructions for repackaging the instrument for shipment. The information contained in this section is for service trained personnel.

WARNING

The information contained in this manual is for service trained personnel who are familiar with electronic circuitry and understand the hazards involved. To avoid electrical shock or damage to the instrument, do not perform any procedures in this manual or do any servicing to the instrument unless you are qualified to do so.

2-3. INITIAL INSPECTION

2-4. The 3457A was carefully inspected, both mechanically and electrically, before shipment. It should be free of mars or scratches and in perfect electrical order upon receipt. The instrument should be carefully inspected for any damage which may have occurred during transit. If the shipping container or cushioning material is damaged, it should be kept until the contents of the shipment have been checked for completeness and the instrument has been mechanically and electrically inspected. The contents of the shipment should be as shown in Figure 2-1; procedures for testing the electrical performance of the HP 3457A are contained in Section IV of this manual. If the contents are incomplete, if there is mechanical damage or defect, or if the instrument does not pass the performance tests, notify the nearest Hewlett-Packard office (a list of HP Sales and Service offices is located in the back of this manual). If the shipping container is damaged, or the cushioning material shows signs of stress, notify the carrier as well as the Hewlett-Packard office. Save the shipping material for the carrier's inspection.

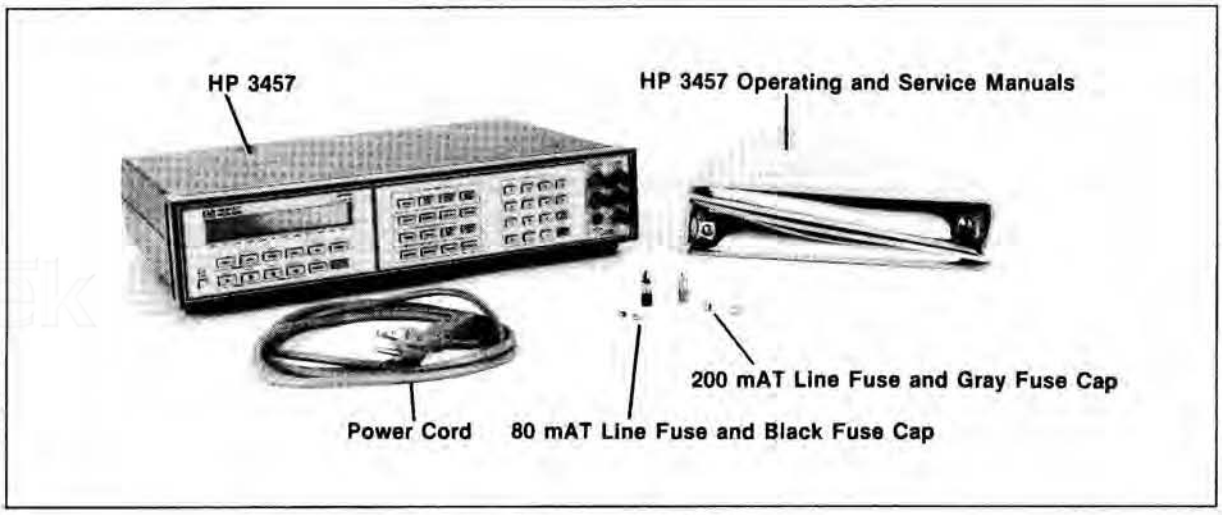

Figure 2-1. Shipment Contents

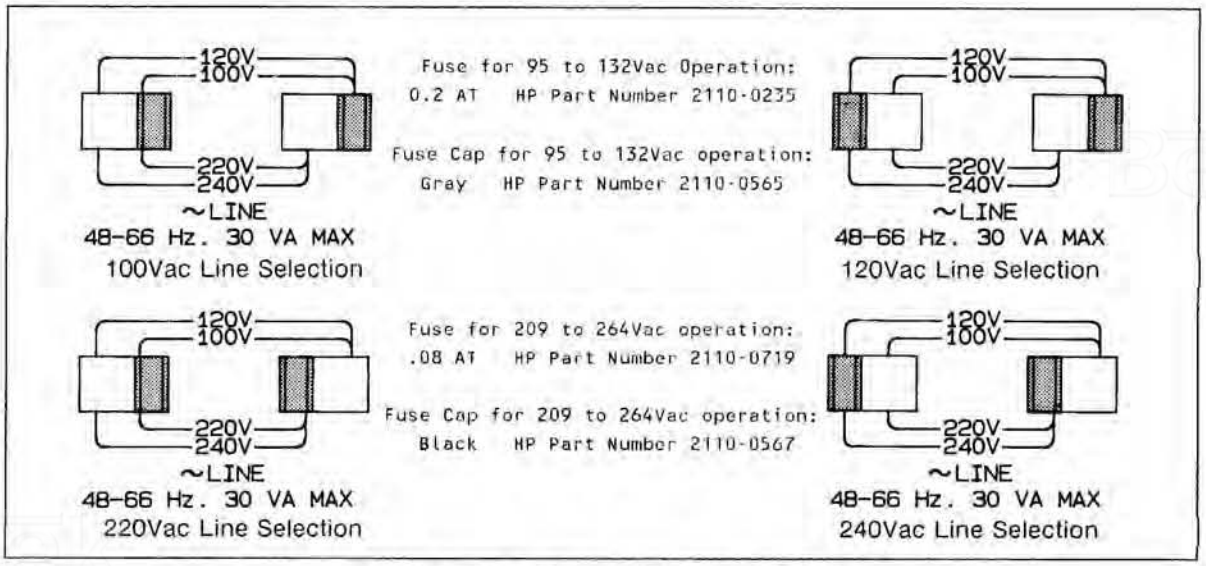

Figure 2-2. Line Voltage and Fuse Selection

2-5. PREPARATION FOR USE

2-6. Power Requirements

2-7. The HP 3457A requires a power source of 100, 120, 220, or 240 Vac (+5%, -10%), 48Hz to 66Hz single phase. Power consumption is less than 30VA.

CAUTION

Before connecting power to the HP 3457A, make certain that the line selection switches (located on the rear panel) have been set to accept the available power source and that the proper fuse is installed.

2-8. Line Voltage Selection

2-9. The line voltage selection switches are located on the rear panel below the power connector and fuse. Figure 2-2 shows the appropriate switch positions and fuse requirements for the various power line voltages.

2-10. Power Cords

2-11. This instrument is equipped with a three-wire power cable. This cable, when connected to an appropriate ac power receptacle, grounds the metal parts of the cabinet. The type of plug supplied with the power cable depends upon the country of destination. Figure 2-3 illustrates the power plugs available. The HP Part Number listed below each figure is the part number for the complete power cord assembly. If the appropriate power cord is not supplied with your instrument, notify your nearest HP Sales and Service Office and a replacement cable will be supplied.

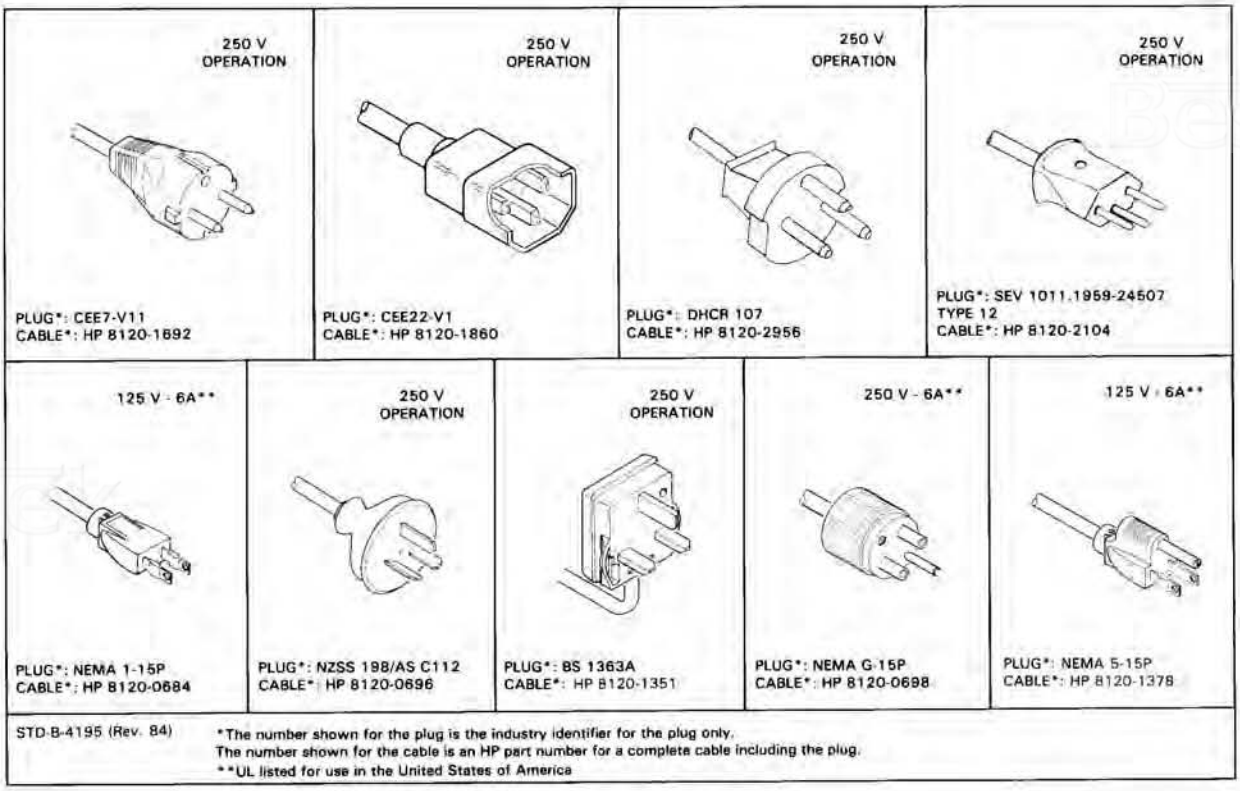

Figure 2-3. Power Cables

2-12. Grounding Requirements

2-13. To protect operating personnel from shock hazard, the National Electrical Manufacturer's Association (NEMA) recommends grounding the instrument cabinet. The HP 3457A is equipped with a three conductor power cord which, when connected to an appropriate outlet, grounds the metal portions of the cabinet.

2-14. Bench Use

2-15. The HP Model 3457A is shipped with feet and tilt stands installed and is ready for use as a bench instrument. The feet are shaped to permit stacking with other HP full-module instruments.

2-16. Rack Mounting

2-17. The HP 3457A may be rack mounted by adding rack mounting kit Option 908 when ordering the instrument. The rack mounting kit may also be ordered separately by ordering HP Part Number 5061-1168. The basic hardware and instructions for rack mounting is contained in the kit. The rack mounting hardware is designed to permit the 3457A to be mounted in a standard 19 inch rack, provided that sufficient rear support is available. Refer to Section I for other mounting options.

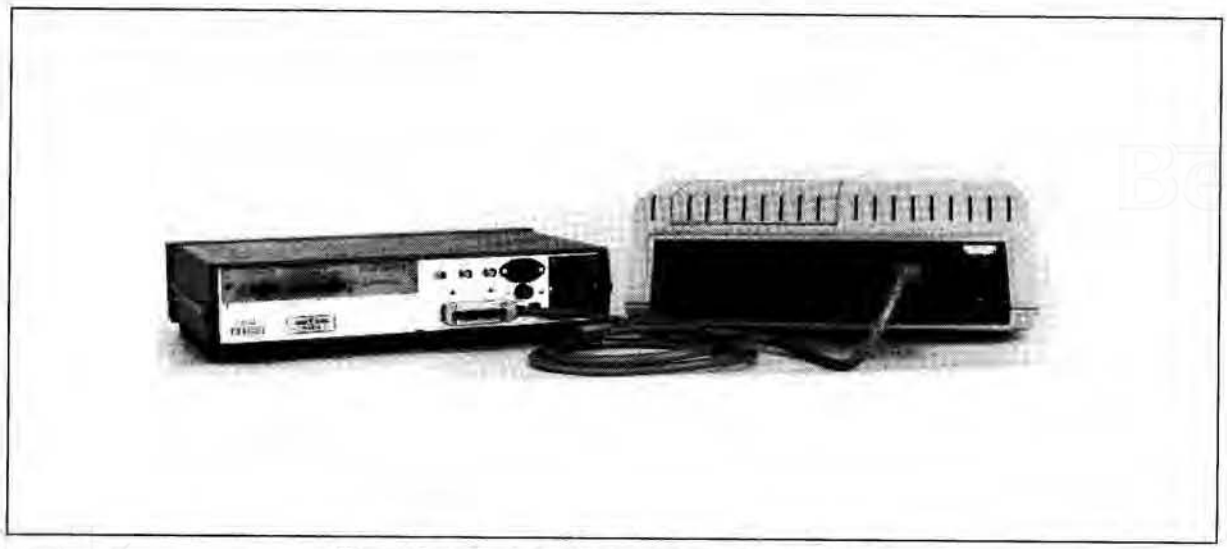

Figure 2-4. Typical HP-IB Interface Connection

2-18 INTERFACE CONNECTIONS

2-19. Control Interface

2-20. The HP Model 3457A is compatible with the Hewlett-Packard Interface Bus (HP-IB). Connection is made using an HP-IB interface cable to connect the controller to the appropriate connector on the rear of the HP 3457A. A typical HP-IB interface system is shown in Figure 2-4. The system shown uses three HP-IB interface cables to connect the instruments in the system. Each interface connector is both a male and female connector to permit connection to an instrument and another interface cable. As many as 15 instruments can be connected by the same interface bus. However, the maximum length of cable used to connect a group of instruments should not exceed the number of instruments times 2 meters (6.56 ft.), or a maximum of 20 meters (65.6 ft.), whichever is less. Refer to Figure 2-5 for a pictorial view of the HP-IB connector and its pin designations.

NOTE

HP-IB is Hewlett-Packard's implementation of IEEE Std. 488-1978, "Standard Digital Interface for Programmable Instrumentation".

2-21. HP-IB ADDRESS SELECTION

2-22. The HP-IB address is programmed from the front panel or over the interface bus. The address is set to decimal "22" at the factory. This corresponds to an ASCII listen address of "6" and talk address of "V". The HP 3457A display momentarily shows the current address code whenever the instrument is turned on or reset.

NOTE

When choosing an address, be certain it is unique to the system involved. Some controllers have an HP-IB address. As an example: HP Series 200 computers have an address of decimal 21.

PIN	LINE
1	DI01
2	DI02
3	DI03
4	DI04
13	DI05
14	DI06
15	DI07
16	DI08
5	EOI
17	REN
6	DAV
7	NRFD
8	NDAC
9	IFC
10	SRQ
11	ATN
12	SHIELD–CHASSIS GROUND
18	P/O TWISTED PAIR WITH PIN 6
19	P/O TWISTED PAIR WITH PIN 7
20	P/O TWISTED PAIR WITH PIN 8
21	P/O TWISTED PAIR WITH PIN 9
22	P/O TWISTED PAIR WITH PIN 10
23	P/O TWISTED PAIR WITH PIN 11
24	ISOLATED DIGITAL GROUND

THESE PINS ARE INTERNALLY GROUNDED

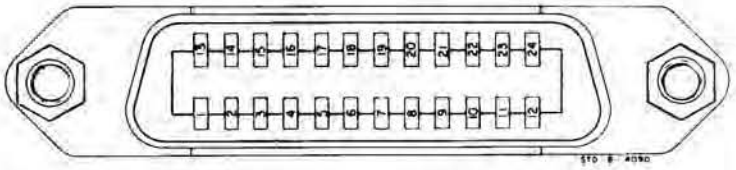

CAUTION

The HP 3457A contains metric threaded HP-IB cable mounting studs as opposed to English threads. Metric threaded HP 16031A, B, or C HP-IB cable lockscrews must be used to secure the cable to the instrument. Identification of the two types of mounting studs and lockscrews is made by their color. English threaded fasteners are colored silver and metric threaded fasteners are colored black. DO NOT mate silver and black fasteners to each other or the threads of either or both will be destroyed. Metric threaded HP-IB cable hardware illustrations and part numbers follow.

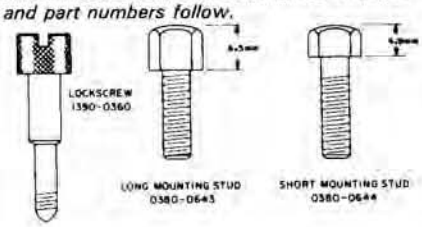

Figure 2-5. HP-IB Connector

2-23. Changing the Address from the Front Panel. The HP-IB address code is set from the front panel as follows:

a. Select the Command Directory "A" listing by pressing the BLUE shift key, then the Configuration "A" key (the display will show ACAL).

b. Use the ↓ scroll key to advance the command listing to ADDRESS.

c. Enter the desired HP-IB decimal address using the MATH keys (refer to Figure 2-6 for a list of available codes).

d. Press the ENTer key located at the lower-right corner of the keyboard.

e. To check the new address, press the BLUE shift key then then the LOCAL/ADRS key. The display will show the new address code. Press any key to stop display of the address.

2-24. Changing the Address from the Controller. To change the HP-IB address from the controller, proceed as follows:

a. Determine the present device address of the HP 3457A. (The address must be known in order to communicate with the HP 3457A.) The address is momentarily displayed during the power-on sequence or can be called by pressing the BLUE shift key then the LOCAL/ADRS key.

ASCII CODE CHARACTER			ASCII CODE CHARACTER		
Listen	Talk	Decimal Code	Listen	Talk	Decimal Code
SP	@	00	0	P	16
!	A	01	1	Q	17
"	B	02	2	R	18
#	C	03	3	S	19
$	D	04	4	T	20
%	E	05	5	U	21
&	F	06	6	V	22
'	G	07	7	W	23
(	H	08	8	X	24
)	I	09	9	Y	25
*	J	10	:	Z	26
+	K	11	;	[	27
,	L	12	<	\	28
-	M	13	=	]	29
.	N	14	>	^	30
/	O	15	Talk Only		31*

* Address 31 sets the 3457A to the Talk Only Mode. In this mode, the 3457A will output directly to an HP-IB printer without a controller on the bus. Address 31 is not, however, a valid HP-IB address with a controller on the bus.

Figure 2-6. HP-IB Address Codes

b. Transmit the new device address to the HP 3457A. The message required to transmit the new address code consists of the controller's transmit command, the HP-IB interface select code, the HP 3457A's device address and the message. As an example; typing the following into a controller which uses HP-enhanced BASIC, would change the device address of the HP 3457A from "22" to "18".

```
OUTPUT 722; "ADDRESS18"
```

In this command statement, OUTPUT is the transmit command of the controller used; "7" is the select code of the HP-IB interface; "22" is the present address of the HP 3457A and "ADDRESS18" is the message to change the instrument address to 18.

2-25. INSTALLATION OF OPTIONS

2-26. The HP 3457A is shipped from the factory with the Rear Terminal Assembly installed. Optional Plug-In Assemblies are packaged separately and must be configured and installed by the customer. Each Plug-In Assembly includes a wiring block and two-piece strain relief housing for making external connections.

2-27. The following paragraphs provide information necessary to configure and install Optional Plug-In Assemblies HP 44491A or HP 44492A.

WARNING

To prevent personal injury, disconnect all external input connections to the HP 3457A before removing or installing the Rear Terminal Assembly or Optional Plug-In Assembly.

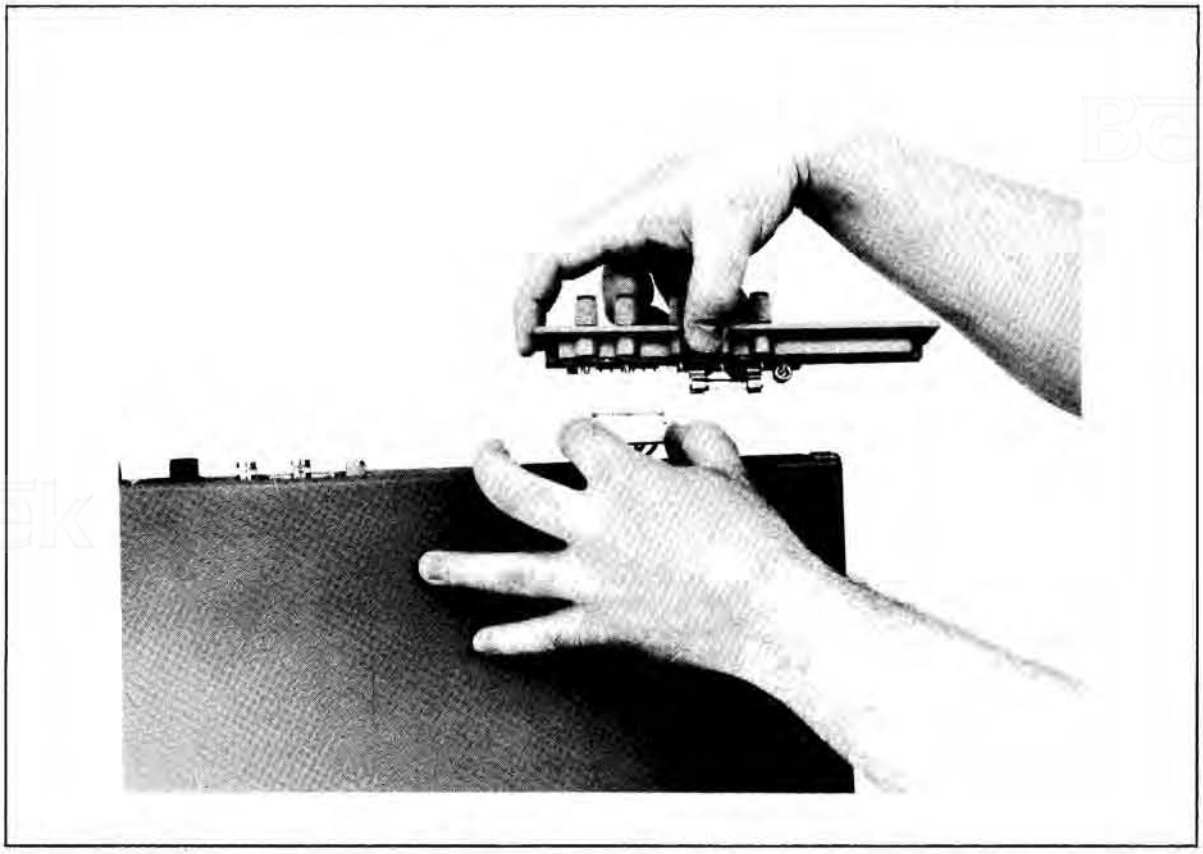

Figure 2-7. Rear Terminal Assembly Removal

CAUTION

Use clean handling and anti-static techniques when removing, configuring, and installing a Plug-In Assembly. The circuit boards must be kept clean to ensure compliance with impedance specifications. The Plug-In Assemblies as well as the HP 3457A mainframe contain CMOS devices that are susceptible to damage from static electricity.

2-28. Rear Terminal Assembly Removal

2-29. The Rear Terminal Assembly must be removed before an Optional Plug-In Assembly can be installed. Remove the Rear Terminal Assembly as follows:

a. Remove the power cord and all external input connections from the HP 3457A.

b. Remove the two screws attaching the Terminal Assembly to the rear panel.

c. Remove the Terminal Assembly and disconnect the attached connector.

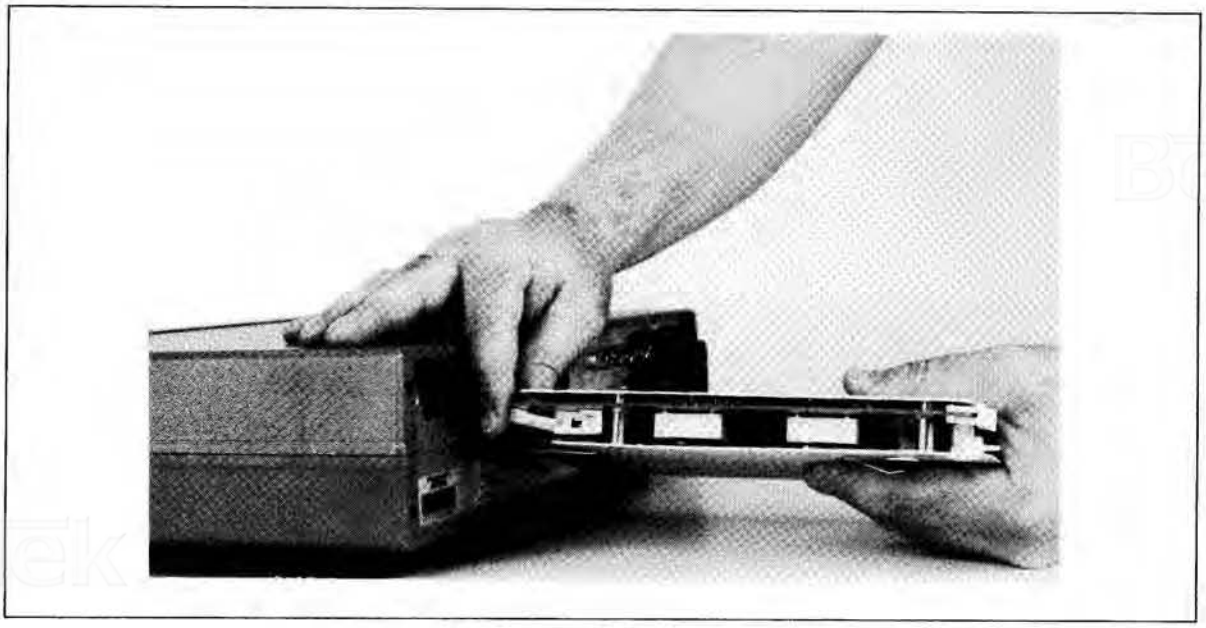

Figure 2-8. Connecting the Wiring Harness

2-30. Plug-In Assembly Installation

2-31. The Rear Terminal Assembly must be removed, as described in paragraph 2-28, before installing a Plug-In Assembly. Install the Plug-In Assembly as follows:

a. Connect the HP 3457A wiring harness connector to the Plug-In Assembly connector as shown in Figure 2-8.

b. Open the two white locking tabs by pulling them away from the circuit board. Notice that each locking tab has a detent which tends to hold it in the closed position.

c. Position the Plug-In Assembly with the component side of the printed circuit board facing down. Slide the Plug-In Assembly into the guides in the rear of the HP 3457A. Firmly push the assembly into the HP 3457A until it stops.

d. Close the two white locking tabs by pressing them flat against the circuit board. As the locking tabs are closed, the Plug-In Assembly is is pushed into the slot. This action locks the assembly into place and engages the assembly's connector with the connector in the HP 3457A.

e. Calibrate the Plug-In Assembly using the appropriate procedure in Section V of this manual.

NOTE

To remove the Plug-In Assembly, simply open the white locking tabs. This releases the locking mechanism and pulls the assembly out of the mainframe connector.

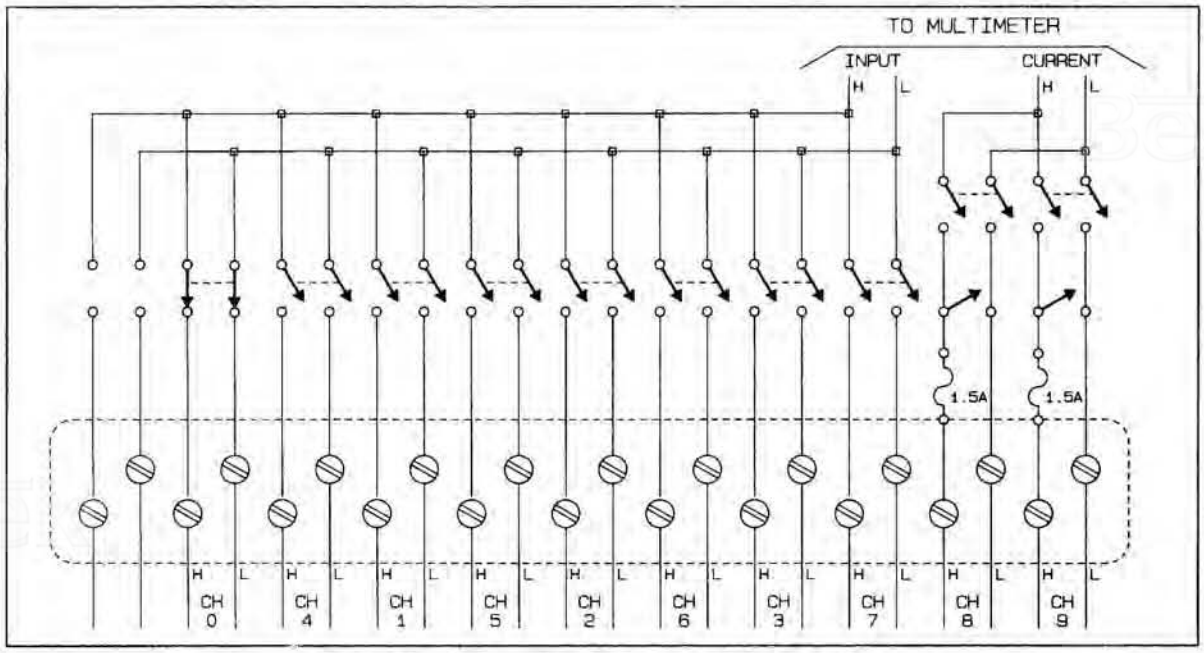

Figure 2-9. HP 44491A 2-Wire Input Configuration

2-32. Plug-In Assembly Configuration

2-33. The Wiring Block Assembly configuration is dependent upon the particular Plug-In Assembly installed (HP 44491A or HP 44492A) and the user's application.

2-34. HP 44491A Configuration. The HP 44491A Armature Relay Assembly can be configured for eight 2-wire input channels, four 4-wire input channels or a combination of 2 and 4-wire input channels. The assembly also has two 2-wire input channels which are used for measuring current or as actuator outputs. The Wiring Block Assembly must be wired for the particular configuration used.

WARNING

The HP 44491A Armature Relay Assembly uses latching relays. The state of these relays can only be altered under program control. This is an advantage in the sense that, under most conditions of failure, the relays will remain in whatever state the program has set them. However, in case of a power failure, any application requiring a fail-safe method of ensuring that the circuits under control are in a known state must be provided by the installer.

In case of component failure or programming error, any voltage input to a plug-in assembly may be present on any other terminal of the plug-in assembly.

2-35. Figures 2-9 through 2-11 show simplified schematics of the HP 44491A Armature Relay Multiplexer Assembly configured for 2-wire inputs, 4-wire inputs and current/actuator applications.

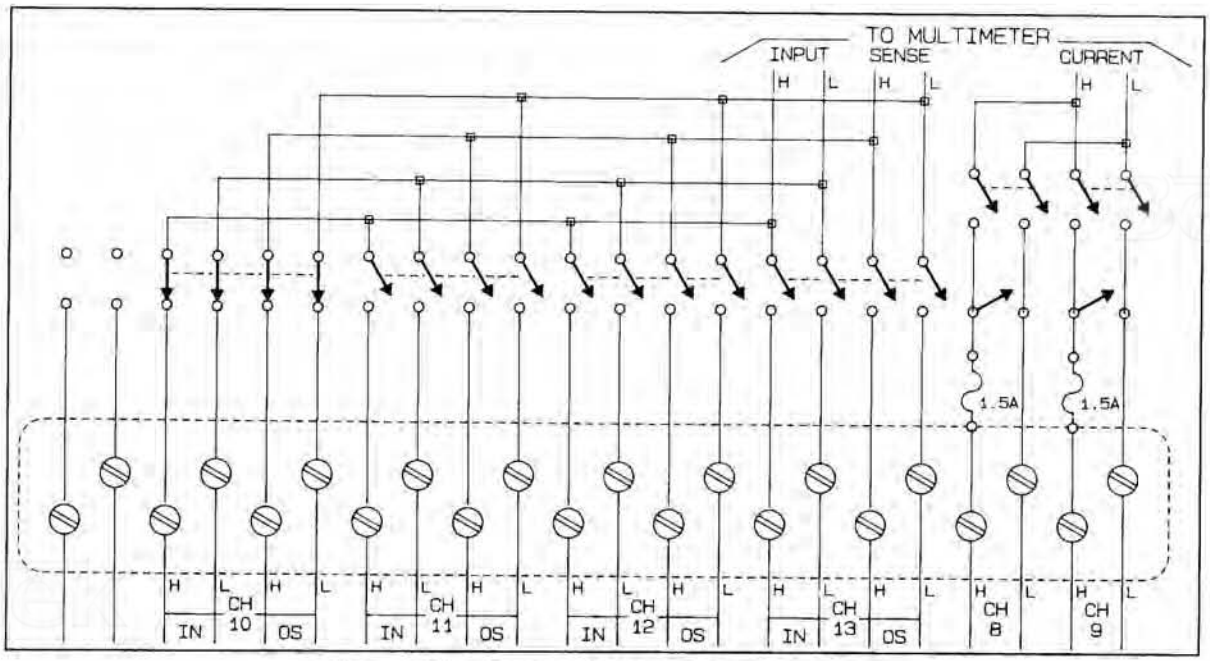

Figure 2-10. HP 44491A 4-Wire Input Configuration

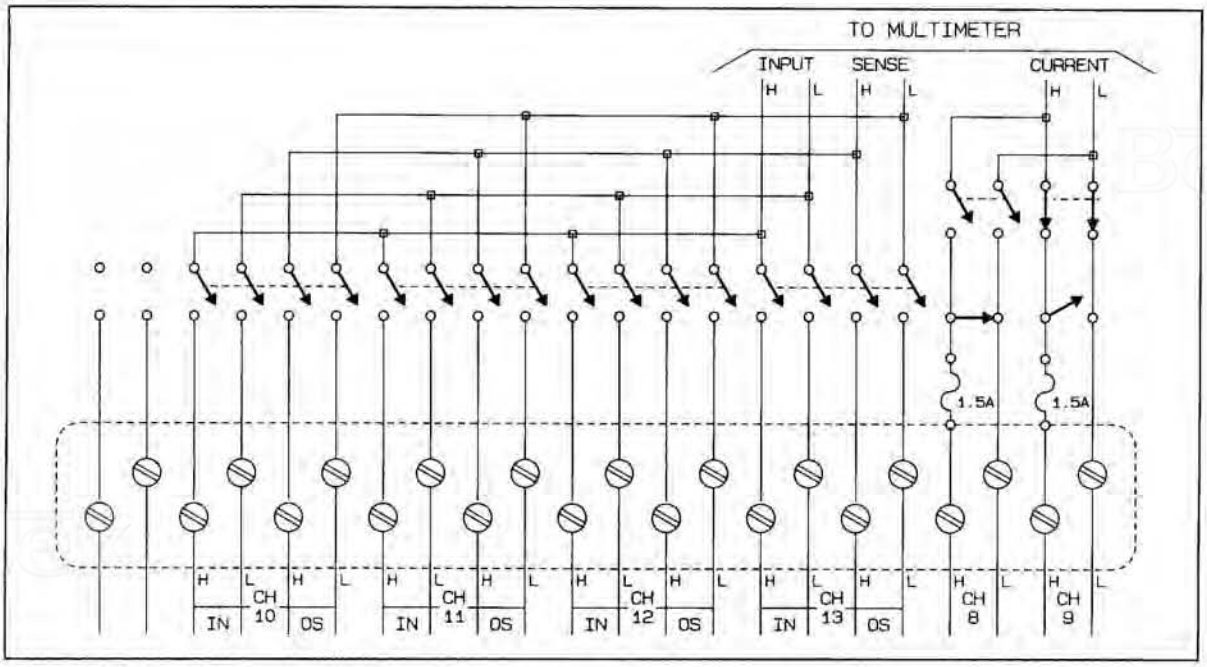

Figure 2-11. HP 44491A Current/Actuator Configuration

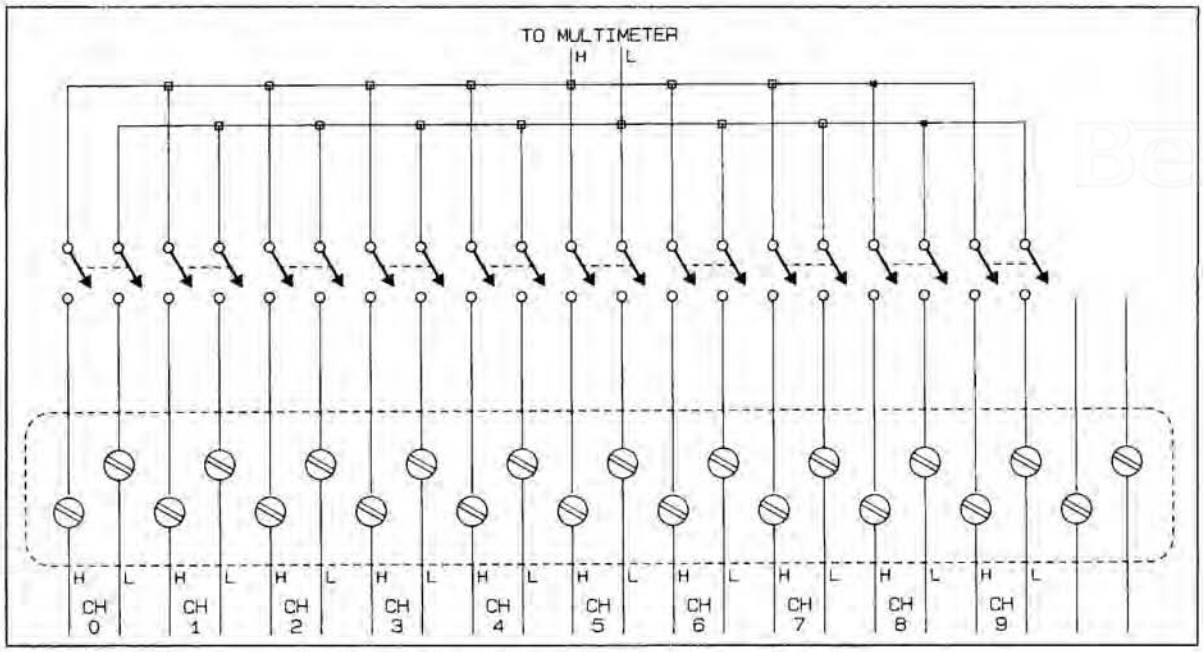

Figure 2-12. HP 44492A Simplified Schematic

2-36. HP 44492A Configuration. The HP 44492A Reed Relay Multiplexer Assembly can be configured for ten 2-wire input measurements. It can be used to measure dc voltage, ac voltage, ac + dc voltage, resistance, frequency and period. It cannot be used for 4-wire ohms or current measurements.

2-37. Figure 2-12 shows a simplified schematic of the HP 44492A Reed Relay Multiplexer Assembly.

2-38. Wiring Block Preparation

a. Remove the Strain Relief Plate from the bottom of the Strain Relief Housing (Figure 2-13, Step 1)

b. Remove the Wiring Block from the Strain Relief Housing (Figure 2-13, Step 2).

c. Strip 8 mm (5/16 in.) of insulation from one end of each wire to connected to the Wiring Block.

d. Loosen the appropriate retaining screw, insert the stripped end of the wire into the slot, and re-tighten the retaining screw (Figure 2-14).

e. Repeat step "d" for each wire to be connected.

f. Connect the Wiring Block to the Strain Relief Housing.

g. Separate the wires into three equal bundles and route them through the cutouts in the Strain Relief Housing (if there are only a few wires, route them all through the center cutout).

h. Secure the Strain Relief Plate to the Strain Relief Housing. Tighten the screws until the plate is snug against the wires. Do not over-tighten.

i. Press the Wiring Block Assembly onto the Plug-In Assembly connector and tighten the screws at each end of the Strain Relief Housing.

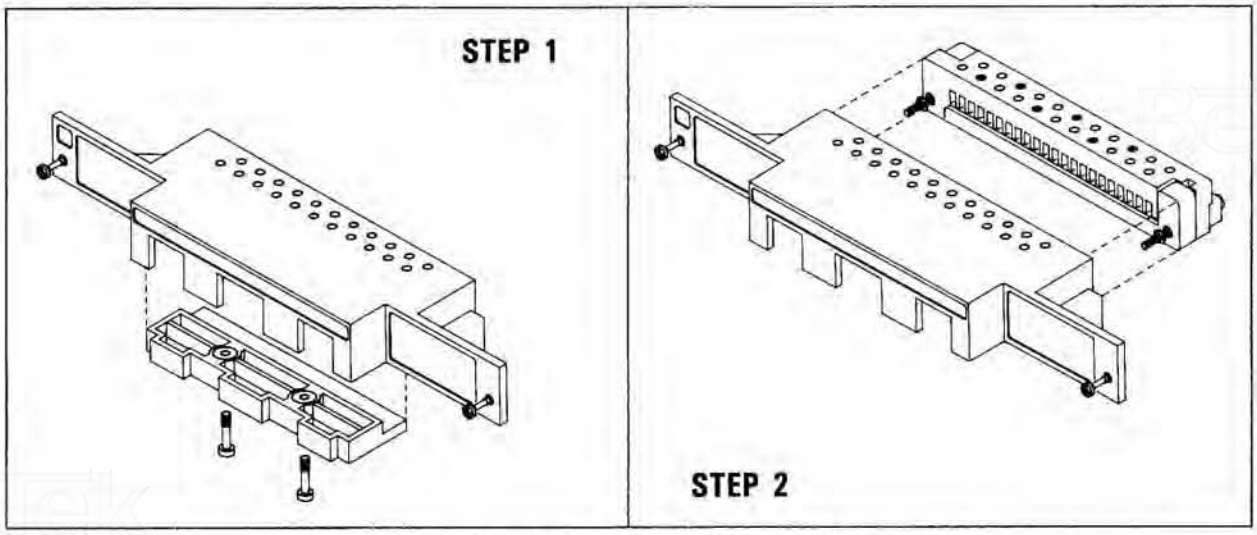

Figure 2-13. Wiring Block Disassembly

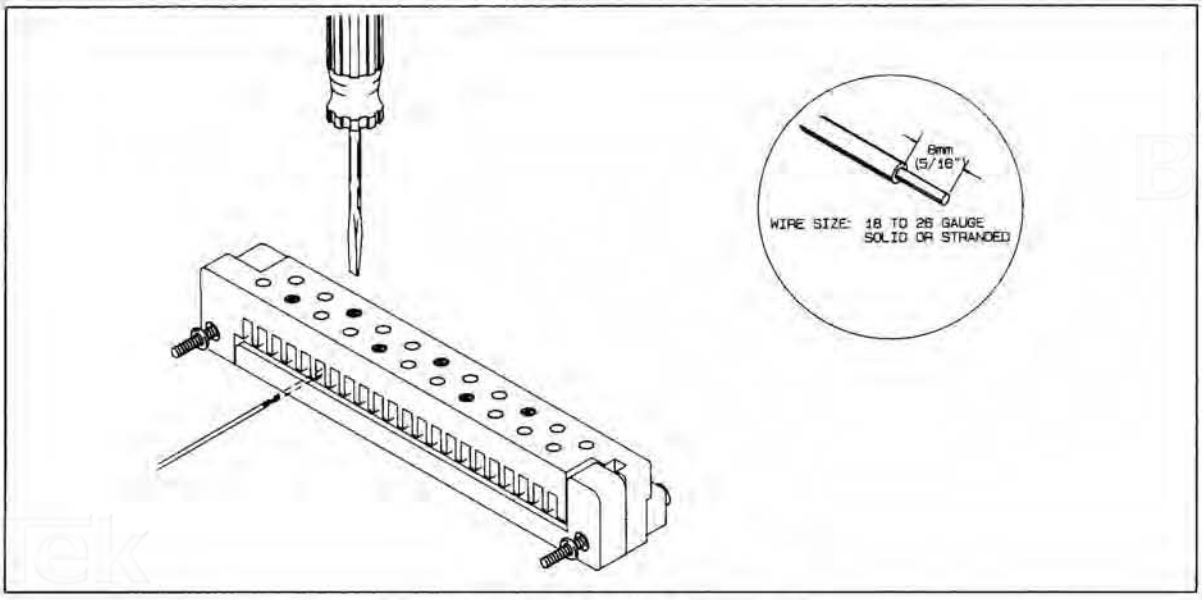

Figure 2-14. Wire Connection

SECTION III
OPERATION

3-1. INTRODUCTION

3-2. The information contained in this section describes manual operation of the HP 3457A Multimeter. The contents are intended to meet the needs of service personnel with emphasis on front panel operation. For more detailed information on overall operation, refer to the HP 3457A Operating Manual.

3-3. GENERAL INFORMATION

3-4. AC Power

3-5. Before connecting power to the HP 3457A, be certain the line switches on the rear panel are set for your power source and that the proper fuse is installed. Information for setting the line switches and for fuse selection is located in Section II of this manual.

3-6. Power-On

3-7. The HP 3457A automatically performs a power-on self test when it is switched on. This test takes approximately 1.5 seconds to complete and basically assures that the instrument is capable of operating. The test does not necessarily indicate that measurements will be accurate. The power-on self test checks the master processor, slave processor and the communication isolation circuitry (three of the ten tests performed by the complete self test). Upon satisfactory completion of the test, the instrument will display its HP-IB address for approximately five seconds. The address is displayed as ADDRESS-dd where "dd" is the decimal address code of the instrument (the address is set to decimal 22 at the factory). If the test can not be completed, the instrument will display FAILED. If this occurs, refer to Section VIII for troubleshooting procedures.

3-8. Upon completion of the Power-On Test, the instrument sets itself to predefined conditions (Power-On state). The power-on state conditions are listed in Table 3-1.

3-9. OPERATION

3-10. The following paragraphs describe basic operating procedures for the HP 3457A Multimeter. This section covers only front panel operating procedures such as voltage, resistance, and current measurements. Also included are manual procedures covering operation of the HP 44491A and 44492A Multiplexer Assemblies. For detailed operating information, refer to the HP 3457A Operating Manual.

3-11. Voltage Measurements (Manual Operation)

3-12. Function Selection. The measurement function is selected by pressing the appropriate key. The voltage measurement functions available are DC Volts, AC Volts and DC Coupled AC Volts. The default function is DC Volts.

- To measure DC Voltage - Press the DCV function key.
- To measure AC Voltage - Press the ACV / ACDCV function key.
- To measure DC coupled AC voltage - Press the Blue SHIFT key then the ACV / ACDCV function key.

AC BANDWIDTH (ACBAND)	SLOW
AUTO-RANGE (ARANGE)	ON
AUTO-ZERO	ON
BEEP	ON
CHANNELS CONNECTED (CHAN)	NONE
DELAY ... DEFAULT (Minimum required for accuracy)	
DIGITS DISPLAYED (NDIG)	5
DISPLAY (DISP)	ON
EMASK	32767 enabled
ERROR REGISTER	Results of Self-Test
FIXED IMPEDANCE (FIXEDZ)	OFF
FREQUENCY SOURCE (FSOURCE)	AC VOLTS
FUNCTION (FUNC)	DC VOLTS
HP-IB ADDRESS .... UNCHANGED (Factory setting 22)	
INPUT BUFFER (INBUF)	OFF
INPUT TERMINALS (TERM)	FRONT
INTEGRATION TIME (NPLC)	10 PLC
MATH FORMAT (MFORMAT)	SREAL
MATH FUNCTION (MATH)	OFF, OFF
MATH REGISTERS . All Cleared Except the following	
DEGREE	20
OFFSET	0
REFERENCE dB (REF)	1
RES	50
SCALE	1
MEMORY (MEM)	OFF
MEMORY SIZE (MSIZE)	Previous Setting
NUMBER OF READINGS PER TRIGGER (NRDGS)	1
OFFSET COMPENSATION (OCOMP)	OFF
OUTPUT FORMAT (OFORMAT)	ASCII
PROGRAM MEMORY	CLEAR
READING MEMORY	CLEAR
REQUEST SERVICE (RQS) .... Power ON bit unchanged	
SCAN ADVANCE (SADV)	HOLD
SCAN LIST (SLIST)	CHANNEL 0
STATUS REGISTER .. Pwr ON bit + Self-Test results	
TIMER	1 SEC.
TRIGGER (TRIG)	AUTO
TRIGGER ARM (TARM)	AUTO

Table 3-1. 3457A Power-On State

3-13. Range Selection. The HP 3457A Auto-Range feature automatically selects the appropriate range to measure the voltage applied. The Auto-Range feature is disabled by selecting Manual Ranging. There are 5 voltage measurement ranges available; 30 mV, 300 mV, 3 V, 30 V and 300 V. The default range is Auto-Range.

- To select Manual Ranging and maintain the present range - Press the Blue SHIFT key then the ↓/HOLD scroll key.
- To select Manual Ranging and the next higher range - Press the ↑/AUTO scroll key.
- To select Manual Ranging and the next lower range - Press the ↓/HOLD scroll key.
- To return to Auto-Ranging - Press the Blue SHIFT key then the ↑/AUTO scroll key.

3-14. Measurement Resolution. Measurement Resolution is changed by selecting the number of digits displayed. You can choose a display of 3 1/2, 4 1/2, 5 1/2 or 6 1/2 digits. The 1/2 digit refers to the most significant digit which is limited to a value of 0, 1, 2, or 3. The default number of digits displayed is 5 1/2 (most significant digit plus 5 digits).

- To change the number of digits displayed - Press the DIGITS DISP / P configuration key, enter the number 3, 4, 5 or 6 and press the ENT / LAST ENTRY key.

3-15. Integration Time. The Integration time can be changed to reduce measurement noise or to permit faster readings. The integration time is dependent upon the power line frequency and is expressed in number of power line cycles (NPLC). There are six integration times available; 100 PLC, 10 PLC, 1 PLC, .1 PLC, .005 PLC and .0005 PLC. The greater the PLC number, the quieter and more accurate the reading will be and the slower the measurement speed.

• To select the Integration Time - Press the NPLC / A configuration key, use the ↑/AUTO or ↓/HOLD scroll key to display the desired number and press the ENT / LAST ENTRY key.

The Integration Time can also be changed by pressing the **NPLC/A** *key, entering the desired number directly, and pressing the* **ENT/LAST ENTRY** *key.*

3-16. Input Connections. For voltage measurements, the input voltage is connected to the INPUT HI and LO Terminals. This is true for both Front and Rear Terminal operation. When using one of the optional Plug-In assemblies, the input is connected to the HI and LO inputs of a particular channel.

3-17. Front/Rear Input Selection. The Input configurations are Front Terminals, Rear Terminals/Scanner or Open. Only one input configuration (front, rear, scanner or open) can be selected at a time.

• To select Input configuration - Press the TERM / M configuration key. Use the ↑/AUTO or ↓/HOLD scroll key to display the desired input and press the ENT / LAST ENTRY key.

The input can also be changed by pressing the **TERM/M** *key, entering the appropriate number, and pressing the* **ENT/LAST ENTRY** *key.*

3-18. Resistance Measurements (Manual Operation)

3-19. Function Selection. The measurement function is selected by pressing the appropriate function key. The resistance measurement functions available are 2-Wire Ohms and 4-Wire Ohms.

• To select 2-Wire resistance measurements - Press the OHM / OHMF function key.

• To select 4-Wire resistance measurements - Press the Blue SHIFT key then the OHM / OHMF key.

3-20. Range Selection. The Auto-Range feature automatically selects the appropriate range for the resistance being measured. The Auto-Range feature is disabled by selecting Manual Ranging. There are 9 resistance measurement ranges available; 30 Ohms, 300 Ohms, 3 KOhms, 30 KOhms, 300 KOhms, 3 MOhms, 30 MOhms, 300 MOhms and 3 GOhms. The extended ohms ranges (300 MOhms and 3 GOhms) are available only for 2-Wire resistance measurements. The default range is Auto-Range.

• To select Manual Ranging and maintain the present range - Press the Blue SHIFT key then the ↓/HOLD scroll key.

• To select Manual Ranging and the next higher range - Press the ↑/AUTO scroll key.

• To select Manual Ranging and the next lower range - Press the ↓/HOLD scroll key.

• To return to Auto-Ranging - Press the Blue SHIFT key then the ↑/AUTO scroll key.

3-21. Measurement Resolution. Measurement Resolution is changed by selecting the number of digits displayed. You can choose a display of 3 1/2, 4 1/2, 5 1/2 or 6 1/2 digits. The 1/2 digit refers to the most significant digit which is limited to a value of 0, 1, 2, or 3. The default number of digits displayed is 5 1/2 (most significant digit plus 5 digits).

• To change the number of digits displayed - Press the DIGITS DISP / P configuration key, enter the number 3, 4, 5 or 6 and press the ENT / LAST ENTRY key.

3-22. Integration Time. The Integration time can be changed to reduce measurement noise or to permit faster readings. The integration time is dependent upon the power line frequency and is expressed in number of power line cycles (NPLC). There are six integration times available; 100 PLC, 10 PLC, 1 PLC, .1 PLC, .005 PLC and .0005 PLC. The greater the PLC number, the quieter and more accurate the reading will be and the slower the measurement speed.

- To select the Integration Time - Press the NPLC / A configuration key. Use the ↑/AUTO or ↓/HOLD scroll key to display the desired number and press the ENT / LAST ENTRY key.

The Integration Time can also be changed by pressing the **NPLC/A** *key, entering the desired number directly using the MATH keys and pressing the* **ENT/LAST ENTRY** *key.*

3-23. Input Connections. For 2-Wire Ohms measurements, the unknown resistance is connected to the INPUT HI and LO terminals. This applies to both front and rear terminal operation. When using one of the optional Plug-In assemblies, the input would be connected to the HI and LO inputs of a particular channel. For 4-Wire Ohms measurements, the unknown resistance is connected to the INPUT HI and LO terminals and to the Ω SENSE HI and LO terminals as shown in Figure 3-1. When using the HP 44491A General Purpose Multiplexer assembly, the unknown resistance is connected as shown in Figure 3-2.

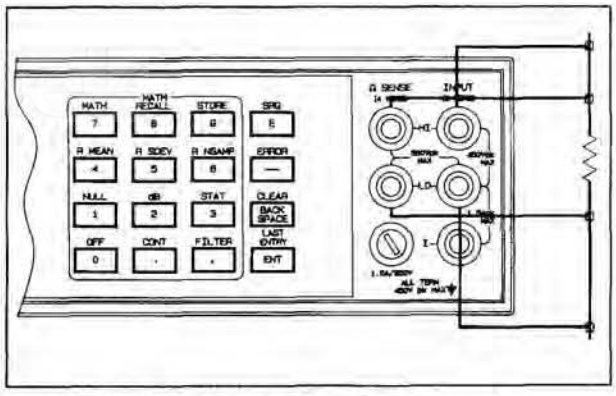

Figure 3-1. Front Panel Connections

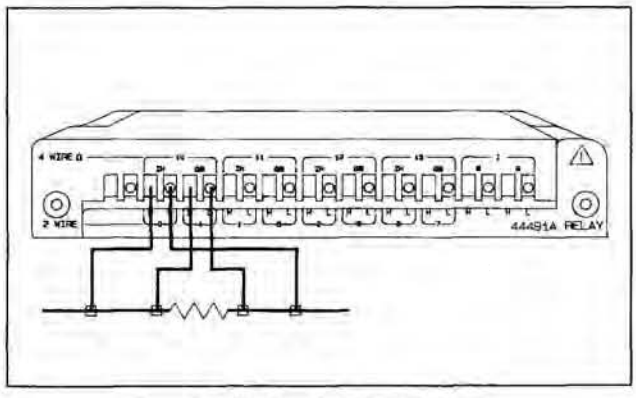

Figure 3-2. Plug-In Connections

3-24. Front/Rear Input Selection. The Input configurations are Front Terminals, Rear Terminals/Scanner or Open. Only one input configuration (front, rear, scanner or open) can be selected at a time.

- To select Input configuration - Press the TERM / M configuration key. Use the ↑/AUTO or ↓/HOLD scroll key to display the desired input and press the ENT / LAST ENTRY key.

The input can also be changed by pressing the **TERM/M** *key, entering the appropriate number using the MATH keys and pressing the* **ENT/LAST ENTRY** *key.*

3-25. Current Measurements (Manual Operation)

3-26. Function Selection. The measurement function is selected by pressing the appropriate function key. The current measurement functions available are DC Current, AC Current and DC Coupled AC Current.

- To select DC Current - Press the DCI function key.
- To select AC Current - Press the ACI / ACDCI function key.
- To select DC coupled AC Current - Press the Blue SHIFT key then the ACI / ACDCI function key.

3-27. Range Selection. The Auto-Range feature automatically selects the appropriate range for the current being measured. The Auto-Range feature can be disabled by selecting Manual Ranging. There are 5 DC current ranges available; 300 uA, 3 mA, 30 mA, 300 mA and 1 A. There are 3 AC current ranges available; 30 mA, 300 mA and 1 A. The maximum input current for DC or AC inputs is 1.5 A peak. The default range is Auto-Range.

- To select Manual Ranging and maintain the present range - Press the Blue SHIFT key then the ↓/HOLD scroll key.
- To select Manual Ranging and the next higher range - Press the ↑/AUTO scroll key.
- To select Manual Ranging and the next lower range - Press the ↓/HOLD scroll key.
- To return to Auto-Ranging - Press the Blue SHIFT key then the ↑/AUTO scroll key.

3-28. Measurement Resolution. Measurement Resolution is changed by selecting the number of digits displayed. You can choose a display of 3 1/2, 4 1/2, 5 1/2 or 6 1/2 digits. The 1/2 digit refers to the most significant digit which is limited to a value of 0, 1, 2, or 3. The default number of digits displayed is 5 1/2 (most significant digit plus 5 digits).

- To change the number of digits displayed - Press the DIGITS DISP / P configuration key, enter the number 3, 4, 5 or 6 and press the ENT / LAST ENTRY key.

3-29. Integration Time. The Integration time can be changed to reduce measurement noise or to permit faster readings. The integration time is dependent upon the power line frequency and is expressed in number of power line cycles (NPLC). There are six integration times available; 100 PLC, 10 PLC, 1 PLC, .1 PLC, .005 PLC and .0005 PLC. The greater the PLC number, the quieter and more accurate the reading will be and the slower the measurement speed.

- To select the Integration Time - Press the NPLC / A configuration key. Use the ↑/AUTO or ↓/HOLD scroll key to display the desired number and press the ENT / LAST ENTRY key.

The Integration Time can also be changed by pressing the **NPLC/A** *key, entering the desired number directly using the MATH keys and pressing the* **ENT/LAST ENTRY** *key.*

3-30. Input Connections. For current measurements, the input current is applied to the INPUT I and LO Terminals. This applies to both Front and Rear Terminal operation. When using the HP 44491A Plug-In assembly, the input is connected to the I and LO inputs of either channel 8 or channel 9.

3-31. Front/Rear Input Selection. The Input configurations are Front Terminals, Rear Terminals/Scanner or Open. Only one input configuration (front, rear, scanner or open) can be selected at a time.

- To select Input configuration - Press the TERM / M configuration key. Use the ↑/AUTO or ↓/HOLD scroll key to display the desired input and press the ENT / LAST ENTRY key.

The input can also be changed by pressing the **TERM/M** *key, entering the appropriate number using the MATH keys and pressing the* **ENT/LAST ENTRY** *key.*

3-32. Frequency/Period Measurements (Manual Operation)

3-33. Function Selection. The measurement function is selected by pressing the appropriate key. The functions available are Frequency and Period.

- To select Frequency - Press the FREQ / PER function key.
- To select Period - Press the Blue SHIFT key then the FREQ / PER function key.

3-34. Range Selection. The HP 3457A has an Auto-Range feature which automatically selects the proper range to measure the signal applied.

3-35. Measurement Resolution. Measurement Resolution is changed by selecting the number of digits displayed. You can choose a display of 3 1/2, 4 1/2, 5 1/2 or 6 1/2 digits. The 1/2 digit refers to the most significant digit which is limited to a value of 0, 1, 2, or 3. The default number of digits displayed is 5 1/2 (most significant digit plus 5 digits).

- To change the number of digits displayed - Press the DIGITS DISP / P configuration key, enter the number 3, 4, 5 or 6 and press the ENT / LAST ENTRY key.

3-36. Integration Time. The Integration time can be changed to reduce measurement noise or to permit faster readings. The integration time is dependent upon the power line frequency and is expressed in number of power line cycles (NPLC). There are six integration times available; 100 PLC, 10 PLC, 1 PLC, .1 PLC, .005 PLC and .0005 PLC. The greater the PLC number, the quieter and more accurate the reading will be and the slower the measurement speed.

- To select the Integration Time - Press the NPLC / A configuration key. Use the ↑/AUTO or ↓/HOLD scroll key to display the desired number and press the ENT / LAST ENTRY key.

The Integration Time can also be changed by pressing the **NPLC/A** *key, entering the desired number directly using the MATH keys and pressing the* **ENT/LAST ENTRY** *key.*

3-37. Input Connections. For frequency/period measurements, the input signal is applied to the INPUT HI and LO Terminals. This applies to both Front and Rear Terminal operation. When using one of the optional Plug-In assemblies, the input is connected to the HI and LO inputs of a particular channel.

3-38. Front/Rear Input Selection. The Input configurations are Front Terminals, Rear Terminals/Scanner or Open. Only one input configuration (front, rear, scanner or open) can be selected at a time.

- To select Input configuration - Press the TERM / M configuration key. Use the ↑/AUTO or ↓/HOLD scroll key to display the desired input and press the ENT / LAST ENTRY key.

The input can also be changed by pressing the **TERM/M** *key, entering the appropriate number using the MATH keys and pressing the* **ENT/LAST ENTRY** *key.*

3-39. HP 44491A General Purpose Multiplexer (Manual Operation)

3-40. The HP 44491A General Purpose Multiplexer has eight 2-wire input channels numbered 0 through 7 and two current/actuator channels numbered 8 and 9. The 2-wire input channels can also be configured as four 4-wire input channels. In this configuration the input channels are numbered 10 through 13.

3-41. Measurement Selection. Determine the type of measurement you wish to make (Voltage, Resistance, Current, Frequency/Period) and set the instrument for that measurement as described in the previous paragraphs.

3-42. Input Selection. When using the General Purpose Multiplexer, the instrument must be set for Rear or Scanner inputs.

- To select Rear Inputs - Press the TERM / M configuration key. Use the ↑/AUTO or ↓/HOLD scroll key to display REAR or SCANNER and press the ENT / LAST ENTRY key.

3-43. Channel Selection. Only one input channel, either 2-wire or 4-wire, plus one actuator channel can be selected at a time. When an input channel is closed, the channel previously closed is opened. The same applies to the actuator channels.

- To select an input channel - Press the CHAN / N configuration key, enter the number of the channel to be closed and press the ENT / LAST ENTRY key.

- To close one of the actuator channels - Press the Blue SHIFT key then the OFFSET COMP / C key. Use the ↓/HOLD scroll key to display CLOSE. Enter the number of the actuator channel to be closed (8 or 9) and press the ENT / LAST ENTRY key.

- To open all channels - Press the Blue SHIFT key then the OFFSET COMP / C key. Use the ↓/HOLD scroll key to display CRESET and press the ENT / LAST ENTRY key.

3-44. Scanning. The instrument can be set to automatically take a number of readings and store them in memory. This makes it possible to measure some or all of the input channels and recall the measurements taken. The following is a simple procedure to measure inputs connected to channels 0 through 7 of the HP 44491A Multiplexer.

- Determine the type of measurement you wish to make (Voltage, Resistance, Current, Frequency/Period) and set the instrument for that measurement as described in the previous paragraphs.

- Select the Rear/Scanner input - Press the TERM / M configuration key. Use the ↑/AUTO or ↓/HOLD scroll key to display REAR:2 or SCANNER:2 and press the ENT / LAST ENTRY key.

- Set the Trigger to Hold - Press the Blue SHIFT key then the STORE / T configuration key. Use the ↓/HOLD scroll key to display the TRIG command. Press the → display key once to hold the command. Use the ↑/AUTO or ↓/HOLD scroll key to display HOLD:4 and press the ENT / LAST ENTRY key.

- Set the number of readings for the number of measurements to be made (in this case 8) - Press the NRDGS / L configuration key, enter the number 8 and press the ENT / LAST ENTRY key.

- Set the Scan Advance to Auto - Press the SCAN ADV / O configuration key. Use the ↑/AUTO or ↓/HOLD scroll key to display AUTO:2 and press the ENT / LAST ENTRY key.

- Enable the Reading Memory - Press the CONFIG / P configuration key then the ENT / LAST ENTRY key.

- Allocate Reading Memory space (each reading requires 4 bytes of memory) - Press the Blue SHIFT key then the TERM / M configuration key. Use the ↓/HOLD scroll key to display MSIZE. Enter the number 32 (8 readings times 4 bytes) and press the ENT / LAST ENTRY key.

- Select the channels to be measured - Press the Blue SHIFT key then the RECALL / S configuration key. Use the ↓/HOLD scroll key to display SLIST. Enter the number of each channel you wish to measure followed by a comma (,) to separate them (example: 0,1,2,3,4,5,6,7). Press the ENT / LAST ENTRY key. *(As many as 16 single digit channel numbers or 8 double digit channel numbers can be entered at one time. The number of readings (NRDGS) should be set for the number of channels entered).*

• Make the measurement - Press the SINGLE / F configuration key to start the measurement sequence. The instrument will read each channel listed and store the readings in memory.

• Recall the readings - Press the Reading Memory RECALL / S key then the ENT / LAST ENTRY key. The reading displayed is the last reading taken. The readings are shifted into memory so that the first reading taken is in the highest number memory location. The last reading taken is in memory location 1. Use the ↑/AUTO and ↓/HOLD scroll keys to view the measurement readings. Use the ←/TEST and →/RESET display keys to read the total display contents.

• To repeat the same set of measurements - Press the CONFIG / R configuration key then the ENT / LAST ENTRY key to clear the reading memory. Press the SINGLE / F configuration key to start the new reading sequence.

3-45. HP 44492A Reed Relay Multiplexer (Manual Operation)

3-46. The HP 44492A Reed Relay Multiplexer has ten 2-wire input channels numbered 0 through 9. This multiplexer is used to make voltage, resistance and frequency or period measurements. It is not designed to make 4-wire ohms or current measurements.

3-47. Measurement Selection. Determine the type of measurement you wish to make (Voltage, Resistance or Frequency/Period) and set the instrument for that measurement as described in the previous paragraphs.

3-48. Input Selection. To use the Reed Relay Multiplexer, the instrument must be set to the Rear/Scanner input.

• Select the Rear/Scanner input - Press the TERM / M configuration key. Use the ↑/AUTO or ↓/HOLD scroll key to display REAR:2 or SCANNER:2 and press the ENT / LAST ENTRY key.

3-49. Channel Selection. Only one input channel can be selected at a time. When an input channel is closed, the channel previously closed is automatically opened.

• To select an input channel - Press the CHAN / N configuration key, enter the number of the channel to be closed and press the ENT / LAST ENTRY key.

• To open all channels - Press the Blue SHIFT key then the OFFSET COMP / C key. Use the ↓/HOLD scroll key to display CRESET and press the ENT / LAST ENTRY key.

3-50. Scanning. The instrument can be set to automatically take a number of readings and store them in memory. This makes it possible to measure some or all of the input channels and recall the measurements taken. The following is a simple procedure to measure inputs connected to channels 0 through 9 of the HP 44492A Reed Relay Multiplexer.

• Determine the type of measurement you wish to make (Voltage, 2-Wire Resistance, Frequency/Period) and set the instrument for that measurement as described in the previous paragraphs.

• Select the Rear/Scanner input - Press the TERM / M configuration key. Use the ↑/AUTO or ↓/HOLD scroll key to display REAR:2 or SCANNER:2 and press the ENT / LAST ENTRY key.

• Set the Trigger to Hold - Press the Blue SHIFT key then the STORE / T configuration key. Use the ↓/HOLD scroll key to display the TRIG command. Press the →/RESET display key once to hold the command. Use the ↑/AUTO or ↓/HOLD scroll key to display HOLD:4 and press the ENT / LAST ENTRY key.

• Set the number of readings to match the number of measurements to be made (in this case 10) - Press the NDRGS / L configuration key, enter the number 10 and press the ENT / LAST ENTRY key.

- Set the Scan Advance to Auto - Press the SCAN ADV / O configuration key. Use the ↑ / AUTO or ↓ / HOLD scroll key to display AUTO:2 and press the ENT / LAST ENTRY key.

- Enable the Reading Memory - Press the CONFIG / R configuration key then the ENT / LAST ENTRY key.

- Allocate Reading Memory space (each reading requires 4 bytes of memory) - Press the Blue SHIFT key then the TERM / M configuration key. Use the ↓ / HOLD scroll key to display MSIZE. Enter the number 40 (10 readings times 4 bytes) and press the ENT / LAST ENTRY key.

- Select the channels to be measured - Press the Blue SHIFT key then the RECALL / S configuration key. Use ↓ / HOLD scroll key to display SLIST. Enter the number of each channel you wish to measure followed by a comma (,) to separate them (example: 0,1,2,3,4,5,6,7,8,9). Press the ENT / LAST ENTRY key. (As many as 16 single digit channel numbers can be entered at one time. The number of readings (NRDGS) should be set to match the number of channels entered).

- Make the measurement - Press the SINGLE / F configuration key to start the measurement sequence. The instrument will read each channel listed and store the readings in memory.

- Recall the readings - Press the Reading Memory RECALL / S key then the ENT / LAST ENTRY key. The reading displayed is the last reading taken. The readings are shifted into memory so that the first reading taken is in the highest number memory location. The last reading taken is in memory location 1. Use the ↑ / AUTO and ↓ / HOLD scroll keys to view the measurement readings. Use the ← and → display keys to read the total display contents.

- To repeat the same set of measurements - Press the CONFIG / R configuration key then the ENT / LAST ENTRY key to clear the reading memory. Press the SINGLE / F configuration key to start the new reading sequence.

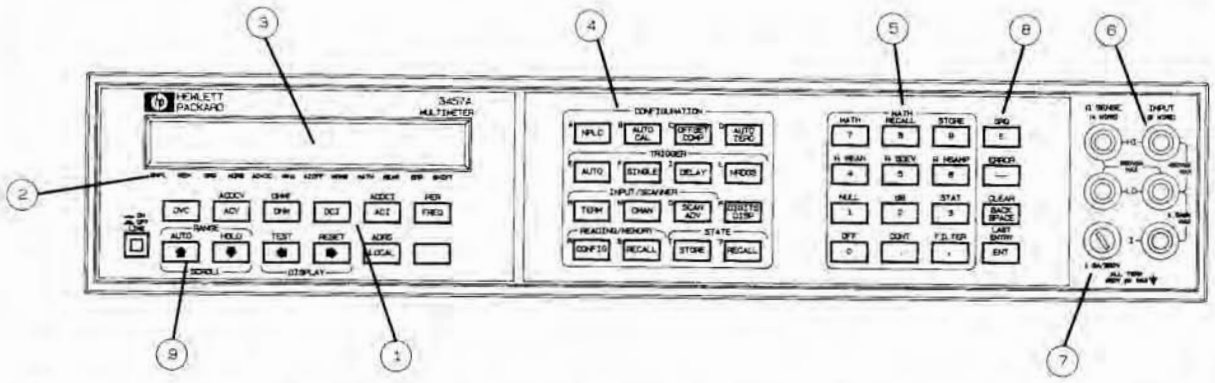

(1) **FUNCTION KEYS** - The function keys select the type of measurement. Available functions are: DC volts (DCV), AC volts (ACV), AC+DC volts (ACDCV), 2-Wire Ohms (OHM), 4-Wire Ohms (OHMF), DC current (DCI), AC current (ACI), AC+DC current (ACDCI), Frequency (FREQ) and Period (PER).

(2) **ANNUNCIATORS** - The 12 annunciators across the bottom of the display indicate the present operating conditions of the instrument. The purpose of each annunciator is as follows:

SMPL - The Sample annunciator flashes to indicate display updates. The maximum display rate is 5 updates per second. The annunciator does not indicate measurement rate.

REM - The Remote annunciator is on when the instrument is being controlled from the HP-IB.

SRQ - The Service Request annunciator is on when the instrument is requesting service from the controller.

ADRS - The Addressed annunciator is on when the instrument has been addressed to talk or listen on the bus.

AC+DC - The AC+DC annunciator is on when the DC coupled AC voltage or current function has been selected.

4WΩ - The 4-Wire Ohms annunciator is on when the 4-Wire Ohms function has been selected.

AZOFF - The Auto-Zero Off annunciator is on when the Auto-Zero feature has been disabled.

MRNG - The Manual Range annunciator indicates the Auto-Ranging feature has been disabled.

MATH - The Math annunciator is on when the mathematics feature the mathematics feature has been selected.

REAR - The Rear Input annunciator indicates that the Rear Input Terminals have been selected.

ERR - The Error annunciator flashes when an error condition exists. Error information is stored in the error registers.

SHIFT - The Shift annunciator is activated when the blue shift key is pressed.

Figure 3-3. Front Panel Features

(3) **DISPLAY** - The display is a 12 character alphanumeric liquid crystal display (LCD). The display is used to show measurement readings and to display messages. When measurements are displayed, the first character indicates the polarity, characters 2 through 8 display the measurement value and the last four characters provide function and range information. The display buffer stores up to 24 characters. Use the ← and → display keys to view displays in excess of 12 characters.

(4) **CONFIGURATION KEYS** - The Math Keys are used to set the operating parameters of the instrument. These keys permit the user to access the command catalog to configure 62 operating parameters. The most commonly used parameters are set by pressing one of the sixteen configuration keys and entering the appropriate parameter value.

(5) **MATH KEYS** - The Math Keys access 13 built-in mathematical functions.

(6) **INPUT TERMINALS** - The five Input Terminals provide HI and LO input conections voltage resistance and current measurements. DC voltage, AC voltage, AC+DC voltage and 2-Wire resistance measurements are made through the INPUT HI and LO terminals. DC current AC current and AC+DC current measurements are made through the INPUT LO and I terminals. 4-Wire resistance measurements are made through the Ω SENSE HI and LO terminals and the INPUT HI and LO terminals.

(7) **FUSE** - The fuse protects the current input circuitry by limiting the input current to 1.5 amps.

(8) **OTHER KEYS** - These special keys perform the following functions:

E/SRQ key - In the normal state this key allows the user to enter exponents (E). In the shifted state, this key sets the Request Service bit.

·/ERROR key - In the normal state, this key is used to enter negative numbers. In the shifted state, this key is used to read the Error Register.

BACK SPACE/CLEAR key - In the normal state, this key is used to back space to correct entries. In the shifted state, this key clears the display.

ENT/LAST ENTRY key - In the normal state, this key is used to enter information into memory. In the shifted state, this key recalls the last entry made.

(9) **DISPLAY KEYS** - These keys are used to change measurement ranges, scroll through the command catalog, shift display messages left or right, run the instrument self test routine, reset the instrument, read the HP-IB address and return the instrument to local (manual) control.

Figure 3-3. Front Panel Features (cont'd)

SECTION IV
PERFORMANCE TESTS

4-1. INTRODUCTION

4-2. Section IV contains Performance Tests designed to verify the accuracy of the HP 3457A Multimeter. Accuracy specifications are listed in Table 1-1 of this manual. This section also contains Operational Verification Tests which provide a more rapid method of testing the operation and accuracy of the unit. The Operational Verification Tests are designed to provide a 90% confidence that the HP 3457A is operational and meets specifications. Both the Performance Tests and Operational Verification Tests can be performed without access to the interior of the instrument.

4-3. EQUIPMENT REQUIRED

4-4. Equipment required for the performance tests and operational verification tests are listed in the Recommend Test Equipment table in Section I of this manual. Equipment other than that recommended may be used as long as the critical specifications are met.

4-5. TEST RECORD

4-6. Results of the performance or operational verification tests may be tabulated on the Test Record located at the end of the respective procedures. The Test Record lists all of the tested specifications and their acceptable limits. It is suggested that the performance tests or operational verification tests be performed and the results tabulated when the instrument is received. These results can be used for comparison with periodic calibration results.

4-7. CALIBRATION CYCLE

4-8. This instrument requires periodic performance verification. The frequency at which the instrument should be tested is dependent upon its usage and the environmental operating conditions. To maintain 24 hour specifications, the instrument should be checked daily; to maintain 90 day specifications, the instrument should be checked at 90 day intervals. It is suggested that the performance test be performed at 90 day intervals for normal operation.

4-9. TEST CONSIDERATIONS

4-10. General

4-11. Because the HP 3457A is capable of making high accuracy measurements, certain requirements need to be made. For example, standards being used to test accuracy should not introduce any significant uncertainties in the performance tests. A standard which is ten times more accurate than the HP 3457A nearly eliminates uncertainties. In most cases, standards with these accuracies are not readily available, therefore, a compromise is necessary. A primary in house standard, one which has been certified by the National Bureau of Standards (NBS) and can supply the necessary outputs, is recommended. If a primary standard is not available, one of the following may be appropriate:

a. Use a standard which is three or four times more accurate than the HP 3457A specifications to be tested. Keep in mind, however, the potential uncertainties these standards may introduce.

b. Use a highly stable calibrated standard and add the correction factors (usually supplied on the calibration charts) to the test reading.

c. Send the HP 3457A to an HP Service Center or other NBS-certified standards facility for calibration.

4-12. PERFORMANCE TESTS

The Performance Tests are divided into 6 main tests, DC Volts, AC Volts, DC Current, AC Current, Ohms, and Frequency. Each test can be performed independently of the others. The steps within each test, however, should be performed in order.

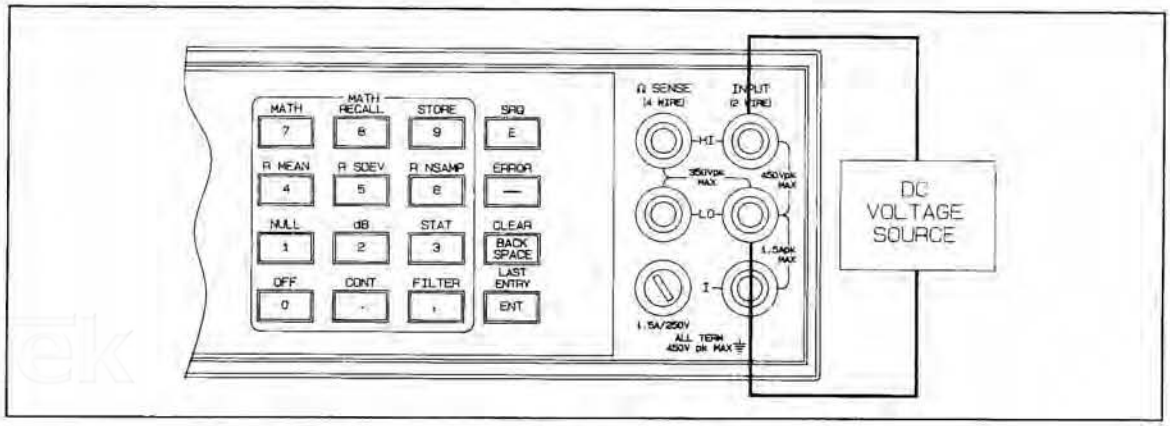

Figure 4-1. DCV Performance Test Connections

NOTE

The temperature of the environment where these tests are to be performed must be within ±5° C of the temperature where the instrument was calibrated. The instrument was calibrated at the factory in an area with a temperature of 24° C (± 1° C).

4-13. Preliminary Steps

1. Turn the instrument ON and allow a one hour warm-up period.

2. Be certain all external inputs are disconnected from the HP 3457A. Run the TEST routine. The test result must read "SELF TEST OK". If the display shows "TEST FAILED", the instrument probably needs repair.

3. Run the AUTO CAL routine. (Press the AUTO CAL key, enter the number 1 and press the ENT key).

DC Voltage Performance Tests

4-14. DC Voltage Function - Offset Test

4-15. Equipment Required. A low thermal short (copper wire) is required for this procedure.

1. Connect a low thermal short across the Front Panel HI and LO Input Terminals.

2. Set the HP 3457A to the DC Voltage function (DCV) and the number of digits displayed (DIGITS DISP) to six.

DC Voltage Performance Tests Cont'd

3457A Input	3457A Range	3457A Set Up	90 day limits High	90 day limits Low	1 year limits High	1 year limits Low
Short	300 V	DCV	+000.0007 V	-000.0007 V	+000.0007 V	-000.0007 V
Short	30 V	DCV	+ 00.00020 V	- 00.00020 V	+ 00.00020 V	- 00.00020 V
Short	3 V	DCV	+ 0.000007 V	- 0.000007 V	+ 0.000007 V	- 0.000007 V
Short	300 mV	DCV	+000.0040 mV	-000.0040 mV	+000.0040 mV	-000.0040 mV
Short	30 mV	DCV	+ 00.00385 mV	- 00.00385 mV	+ 00.00385 mV	- 00.00385 mV
30 mV	30 mV	DCV	+ 30.00505 mV	+ 29.99495 mV	+ 30.00520 mV	+ 29.99480 mV
300 mV	300 mV	DCV	+300.0115 mV	+299.9885 mV	+300.0145 mV	+299.9855 mV
3 V	3 V	DCV	+ 3.000058 V	+ 2.999942 V	+ 3.000082 V	+ 2.999918 V
2 V	3 V	DCV	+ 2.000041 V	+ 1.999959 V	+ 2.000057 V	+ 1.999943 V
1 V	3 V	DCV	+ 1.000024 V	+ 0.999976 V	+ 1.000032 V	+ 0.999968 V
-1 V	3 V	DCV	- 0.999976 V	- 1.000024 V	- 0.999968 V	- 1.000032 V
-2 V	3 V	DCV	- 1.999959 V	- 2.000041 V	- 1.999943 V	- 2.000057 V
-3 V	3 V	DCV	- 2.999942 V	- 3.000058 V	- 2.999918 V	- 3.000082 V
30 V	30 V	DCV	+ 30.00125 V	+ 29.99875 V	+ 30.00140 V	+ 29.99860 V
300 V	300 V	DCV	+300.0157 V	+299.9843 V	+300.0172 V	+299.9828 V

Table 4-1. DC Voltage Test Limits

3. Test the HP 3457A input offset on the 300 V, 30 V, 3 V, 300 mV and 30 mV ranges and record the reading of each range on the Test Record provided at the end of this section. Begin with the 300 V range to allow any thermal voltages which might affect the readings on the lower ranges to dissipate.

4. If any of the offset readings are beyond the limits specified on the Test Record, the instrument should be calibrated or repaired. Refer to Section V of this manual for calibration procedures.

5. Remove the short from the Front Panel Input Terminals.

4-16. DC Voltage Function - Gain Test

4-17. Equipment Required. A DC Voltage Standard capable of providing 30 mV (± .0055%), 300 mV (± .0012%), 1 V, 2 V and 3 V (± .0006%), 30 V (± .0013%) and 300 V (± .0017%) is required for this procedure.

1. Set the output of the DC Voltage Standard to 30 mV and connect it to the HP 3457A front panel HI and LO Input Terminals. See Figure 4-1.

2. Use the Test Record to record the full-scale readings for the 30 mV, 300 mV, 3 V, 30 V and 300 V ranges. Begin with the 30 mV range.

3. If any of the full-scale readings are beyond the specified limits, refer to Section V for calibration procedures.

4. Reduce the output of the Voltage Standard to 3 volts.

DC Voltage Performance Tests Cont'd

4-18. DC Voltage Function - Linearity Test

4-19 Equipment Required. A DC Voltage Standard capable of providing 1 V, 2 V and 3 V (± .0006%) is required for this procedure.

1. Set the HP 3457A to the 3 V range.

2. Set the Voltage Standard to 3 V, 2 V and 1 V. Use the Test Record to record the 3 V, 2 V and 1 V readings.

3. Reverse the leads at the Input Terminals of the HP 3457A to provide a negative input voltage.

4. Set the Voltage Standard to 1 V, 2 V and 3 V. Use the Test Record to record the -1 V, -2 V and -3 V readings.

6. If any of the linearity readings are beyond the limits specified, refer to Section V for calibration procedures. If the problem can not be corrected with calibration, refer to Section VIII for troubleshooting information.

7. Disconnect the DC Voltage Standard from the HP 3457A Input Terminals.

AC Voltage Performance Tests

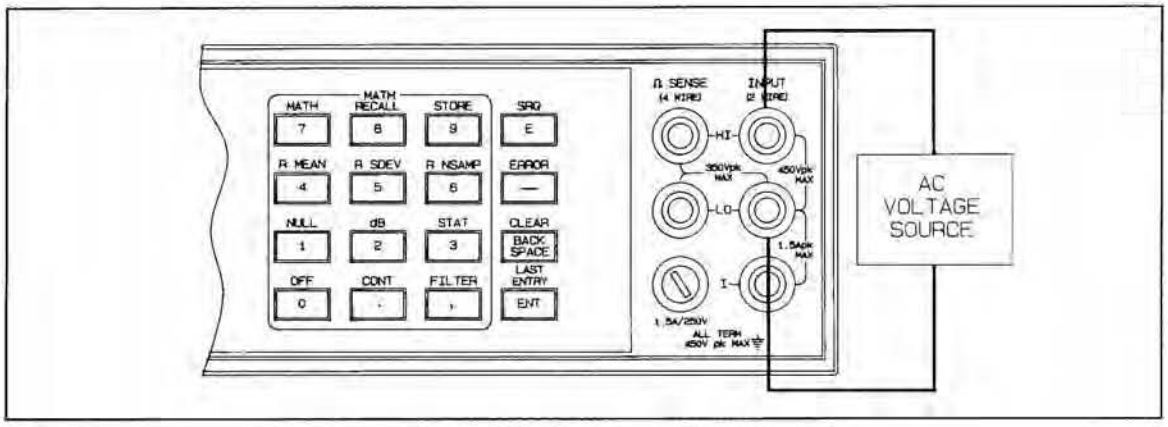

Figure 4-2. ACV Performance Test Connections

4-20. AC Voltage Function - Gain Test

4-21. Equipment Required. An AC Signal Source capable of providing sine-wave voltages of 30 mV, 300 mV, 1 V, 2 V, 3 V, 30 V and 300 V (± 0.1%) at a frequency of 1 KHz is required for the following procedure.

1. Set the output of the AC Signal Source for an output voltage of 30 mV at a frequency of 1 KHz and connect it to the HP 3457A front panel HI and LO input terminals.

AC Voltage Performance Tests Cont'd

2. Use the Test Record to record the 30 mV, 300 mV, 3 V, 30 V and 300 V full-scale readings beginning with the 30 mV range.

3. Test the HP 3457A accuracy at one-tenth of full-scale on the 300 V, 30 V, 3 V and 300 mV ranges. Set the HP 3457A to each range and the AC Signal Source to provide a voltage equal to one-tenth of the full-scale value of the range selected. Use the Test Record to record the readings for each range.

4. If any of the gain readings are beyond the limits specified in Table 4-2 and on the Test Record, the instrument should be calibrated or repaired. Refer to Section V of this manual for calibration procedures.

5. Set the AC Voltage Standard for an output of 30 mV.

3457A Input	Input Freq.	3457A Range	3457A Set Up	90 day limits High	90 day limits Low
30 mV	1 kHz	30 mV	ACV	30.05020 mV	29.94980 mV
300 mV	1 kHz	300 mV	ACV	300.5020 mV	299.4980 mV
1 V	1 kHz	3 V	ACV	1.002420 V	0.997580 V
2 V	1 kHz	3 V	ACV	2.003720 V	1.996280 V
3 V	1 kHz	3 V	ACV	3.005100 V	2.994900 V
30 V	1 kHz	30 V	ACV	30.05020 V	29.94980 V
300 V	1 kHz	300 V	ACV	300.6820 V	299.3180 V
30 V	1 kHz	300 V	ACV	030.1690 V	029.8310 V
3 V	1 kHz	30 V	ACV	03.01510 V	02.98490 V
300 mV	1 kHz	3 V	ACV	0.301510 V	0.298490 V
30 mV	1 kHz	300 mV	ACV	030.1510 mV	029.8490 mV

Table 4-2. AC Gain Test Limits

4-22. AC Voltage Function - Frequency Response Test

4-23. Equipment Required. An AC Signal Source capable of providing sine-wave voltages of 30 mV, 300 mV and 3 V at frequencies of 1 MHz, 300KHz, 100 KHz, 20 KHz, 6.5 KHz, 400 Hz, 100 Hz, 45 Hz and 20 Hz is required for the following procedure. Table 4-3 lists the required accuracy of the test equipment.

VOLTAGE	FREQUENCY 1MHz	300KHz	100KHz	20KHz	6.5KHz	400Hz	100Hz	45Hz	20Hz
30 mV	+- 10%	+- 2%	+- .6%	+- .3%	+- .3%	+- .3%			
300 mV	+- 3%	+- 1%	+- .2%	+- .2%	+- .2%	+- .2%	+- .1%	+- .3%	+- .3%
3 V	+- 3%	+- 1%	+- .2%	+- .2%	+- .2%	+- .2%	+- .1%	+- .3%	+- .3%

Table 4-3. AC Signal Source Voltage Accuracy Requirements

1. Set the AC Voltage Standard for an output voltage of 30 mV and connect it to the HP 3457A front panel HI and LO input terminals.

AC Voltage Performance Tests Cont'd

3457A Input	Input Freq.	3457A Range	3457A Set Up	90 day Limits High	90 day Limits Low
30 mV	1 MHz	300 mV	ACF	039.6880 mV	020.3120 mV
" "	300 kHz	" "	"	031.9180 mV	028.0820 mV
" "	100 kHz	" "	"	030.4080 mV	029.5920 mV
" "	20 kHz	" "	"	030.1510 mV	029.8490 mV
" "	6.5 kHz	" "	"	030.1510 mV	029.8490 mV
" "	400 Hz	" "	"	030.1510 mV	029.8490 mV
300 mV	1 MHz	300 mV	ACF	337.1200 mV	262.8800 mV
" "	300 kHz	" "	"	310.4500 mV	289.5500 mV
" "	100 kHz	" "	"	302.1900 mV	297.8100 mV
" "	20 kHz	" "	"	300.5320 mV	299.4680 mV
" "	6.5 kHz	" "	"	300.5320 mV	299.4680 mV
" "	400 Hz	" "	"	300.5320 mV	299.4680 mV
300 mV	1 MHz	3 V	ACF	0.396880 V	0.203120 V
" "	300 kHz	"	"	0.319180 V	0.280280 V
" "	100 kHz	"	"	0.304080 V	0.295920 V
" "	20 kHz	"	"	0.301510 V	0.298490 V
" "	6.5 kHz	"	"	0.301510 V	0.298490 V
" "	400 Hz	"	"	0.301510 V	0.298490 V
3 V	1 MHz	3 V	ACF	3.371200 V	2.628800 V
"	300 kHz	"	"	3.104500 V	2.895500 V
"	100 kHz	"	"	3.021900 V	2.978100 V
"	20 kHz	"	"	3.005320 V	2.994680 V
"	6.5 kHz	"	"	3.005320 V	2.994680 V
"	400 Hz	"	"	3.005320 V	2.994680 V
3 V	100 Hz	3 V	ACS	3.007420 V	2.992580 V
"	45 Hz	"	"	3.017920 V	2.982080 V
"	20 Hz	"	"	3.017920 V	2.982080 V
300 mV	100 Hz	300 mV	ACS	300.7420 mV	299.2580 mV
" "	45 Hz	" "	"	301.7920 mV	298.2180 mV
" "	20 Hz	" "	"	301.7920 mV	298.2180 mV

Table 4-4. AC Frequency Response Test Limits

2. Set the HP 3457A to the AC Voltage function (ACV), the range to 300 mV and the AC Bandwidth to AC Fast. (To change the Bandwidth - Press the SHIFT key, then the Configuration A key. Use the ↓ scroll key to display ACBAND. Enter a number greater than 400 and press the ENT key).

3. Use the Test Record to record the 30 mV (300 mV tenth-scale) readings at 400 Hz, 6.5 KHz, 20 KHz, 100 KHz, 300 KHz and 1 MHz.

4. Set the AC Voltage Standard for an output voltage of 300 mV.

5. Use the Test Record to record the 300 mV readings at 1 MHz, 300 KHz, 100 KHz, 20 KHz, 6.5 KHz and 400 Hz.

AC Voltage Performance Tests Cont'd

6. Set the HP 3457A to the 3 volt range.

7. Use the Test Record to record the 300 mV (3 V tenth-scale) readings at 400 Hz, 6.5 KHz, 20 KHz, 100 KHz, 300 KHZ and 1 MHz.

8. Set the AC Voltage Standard for an output voltage of 3 volts.

9. Use the Test Record to record the 3 V readings at 1 MHz, 300 KHz, 100 KHz, 20 KHz, 6.5KHz and 400 Hz.

10. Set the HP 3457A AC Bandwidth to AC Slow. (Press the SHIFT key, then the Configuration A. Use the ↓ scroll key to display ACBAND. Enter a number less than 400 and press the ENT key).

11. Use the Test Record to record the 3 V readings at 100 Hz, 45 Hz and 20 Hz.

12. Set the AC Voltage Standard for an output voltage of 300 mV.

13. Set the HP 3457A to the 300 mV range.

14. Use the Test Record to record the 300 mV readings at 20 Hz, 45 Hz and 100 Hz.

15. Reduce the output of the AC Voltage Standard and disconnect it from the HP 3457A input terminals.

16. If any of the readings are beyond the limits specified in Table 4-4 and on the Test Record, the instrument should be calibrated or repaired. Refer to Section V of this manual for calibration procedures.

DC Current Performance Tests

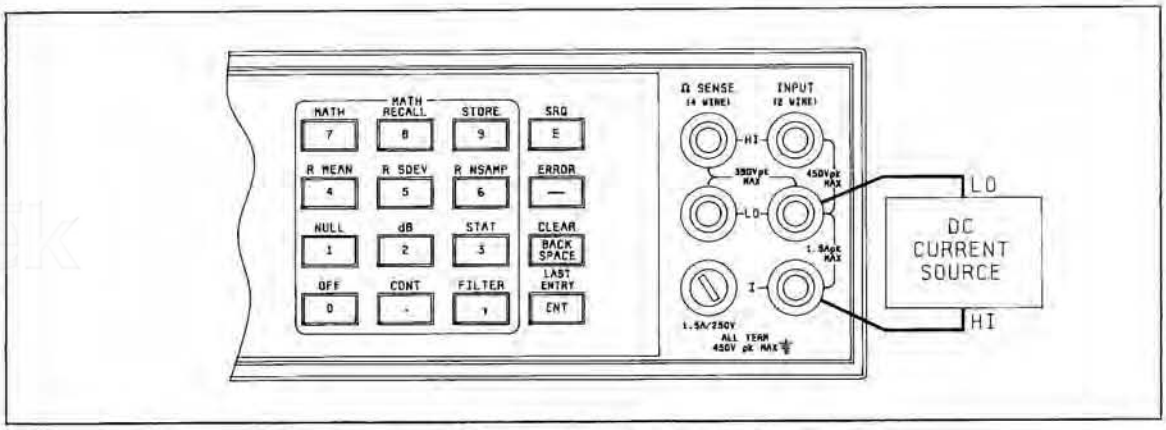

Figure 4-3. DCI Performance Test Connections

DC Current Performance Tests Cont'd

3457A Input	3457A Range	3457A Set Up	90 day limits High	90 day limits Low	1 year limits High	1 year limits Low
Open	300 uA	DCI	+000.0104 uA	-000.0104 uA	+000.0104 uA	-000.0104 uA
Open	3 mA	DCI	+0.000104 mA	-0.000104 mA	+0.000104 mA	-0.000104 mA
Open	30 mA	DCI	+00.00104 mA	-00.00104 mA	+00.00104 mA	-00.00104 mA
Open	300 mA	DCI	+000.0204 mA	-000.0204 mA	+000.0204 mA	-000.0204 mA
Open	1 A	DCI	+0.000604 A	-0.000604 A	+0.000604 A	-0.000604 A
300 uA	300 uA	DCI	300.0704 uA	299.9296 uA	300.1304 uA	299.8696 uA
3 mA	3 mA	DCI	3.000704 mA	2.999296 mA	3.001304 mA	2.998696 mA
30 mA	30 mA	DCI	30.00704 mA	29.99296 mA	30.01304 mA	29.98696 mA
300 mA	300 mA	DCI	300.2304 mA	299.7696 mA	300.2604 mA	299.7396 mA
1 A	1 A	DCI	1.001304 A	0.998696 A	1.001304 A	0.998696 A

Table 4-5. DC Current Offset and Gain Test Limits

4-24. DC Current Function - Offset Test

4-25. Equipment Required. This procedure does not require any test equipment.

1. Set the HP 3457A to the DC Current function (DCI), 300 uA range, and the number of digits displayed (DIGITS DISP) to six.

2. Use the Test Record to record the current offset readings on the 300 uA, 3 mA, 30 mA, 300 mA and 1 A ranges.

3. If any of the offset readings are beyond the limits specified in Table 4-5 and on the Test Record, the instrument should be calibrated or repaired. Refer to Section V of this manual for calibration procedures.

4-26. DC Current Function - Gain Test

4-27. Equipment Required. A DC Current Source capable of providing currents of 300 uA, 3 mA, 30 mA (± .007%), 300 mA (± .026%), and 1 A (± .04%) is required for the following procedure.

1. Set the DC Current Source to 300 uA and connect it to the HP 3457A front panel **I** and **LO** input terminals.

2. Set the HP 3457A to the 300 uA range and the number of digits displayed (DIGITS DISP) to six.

3. Use the Test Record to record the full-scale current readings for the 300 uA, 3 mA, 30 mA, 300 mA and 1 A ranges.

4. If any of the full-scale readings are beyond the limits specified in Table 4-5 and on the Test Record, the instrument should be calibrated or repaired. Refer to Section V of this manual for calibration procedures.

5. Reduce the output of the DC Current Source and disconnect it from the HP 3457A input terminals.

AC Current Performance Tests

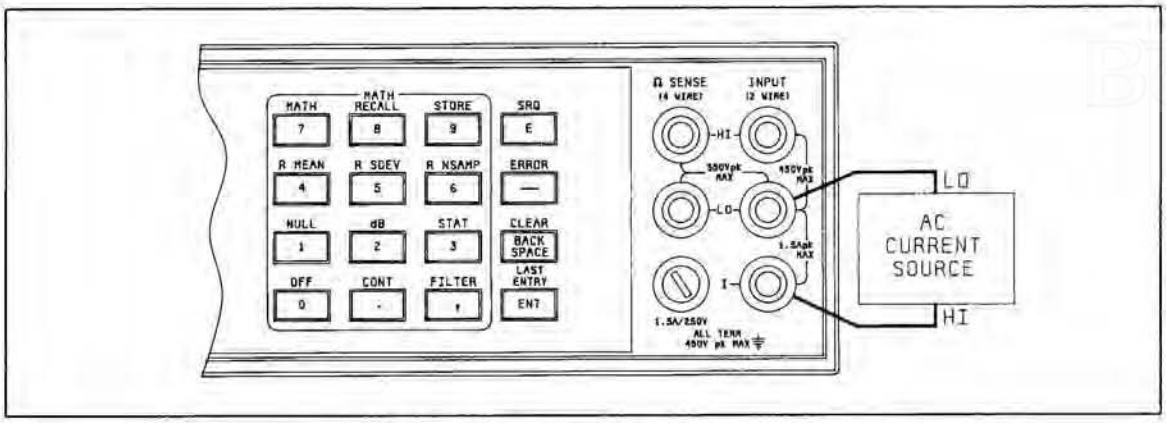

Figure 4-4. ACI Performance Test Connections

4-28. AC Current Function - Gain Test

4-29. Equipment Required, An AC Current Source capable of providing currents of 30 mA (± .14%), 300 mA (± .14%) and 1 A (± .24%) at a frequency between 100 Hz and 20 KHz is required for the following test.

1. Set the AC Current source for an output of 30 mA at a frequency between 100 Hz and 20 KHz and connect it to the HP 3457A front panel **I** and **LO** input terminals.

2. Set the HP 3457A to the 30 mA range and the number of digits displayed (DIGITS DISP) to six.

3. Use the Test Record to record the 30 mA, 300 mA and 1 A full-scale readings.

4. If the full-scale readings are beyond the limits specified in Table 4-6 and on the Test Record, the instrument should be calibrated or repaired. Refer to Section V of this manual for calibration procedures.

5. Reduce the output of the AC Current Source and disconnect it from the HP 3457A input terminals.

3457A Input	3457A Range	3457A Set Up	90 day limits High	90 day limits Low
30 mA	30 mA	ACI	30.10300 mA	29.89700 mA
300 mA	300 mA	ACI	301.0300 mA	298.9700 mA
1 A	1 A	ACI	1.005300 A	0.994700 A

Table 4-6. AC Current Test Limits

2-Wire Ohms Performance Tests

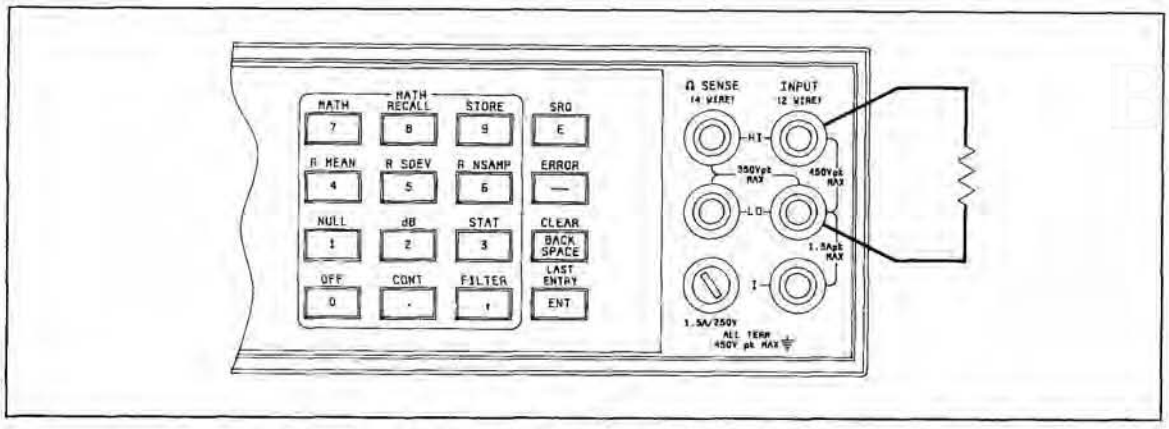

Figure 4-5. 2-Wire Ohms Performance Test Connections

4-30. 2-Wire Ohms Function - Offset Test

4-31. Equipment Required. A low thermal short (copper wire) is required for this procedure.

1. Connect a low thermal short across the HP 3457A front panel HI and LO input terminals.

2. Set the HP 3457A to the 2-Wire Ohms Function, 30 Ohm range and the number of digits displayed (DIGITS DISP) to six.

3. Use the Test Record to record the offset readings for the 30 Ohm, 300 Ohm, 3 Kohm, 30 Kohm, 300 Kohm, 3 Mohm and 30 Mohm ranges.

4. If any of the offset readings are beyond the limits specified in Table 4-7 and on the Test Record, the instrument should be calibrated or repaired. Refer to Section V for calibration procedures.

5 . Remove the short from the front panel input terminals.

3457A Input	3457A Range	3457A Set Up	90 day limits	1 year limits
Short	30 ohm	OHM	00.20335 ohm	00.20335 ohm
Short	300 ohm	OHM	000.2035 ohm	000.2035 ohm
Short	3 Kohm	OHM	0.000207 Kohm	0.000207 Kohm
Short	30 Kohm	OHM	00.00027 Kohm	00.00027 Kohm
Short	300 Kohm	OHM	000.0010 Kohm	000.0010 Kohm
Short	3 Mohm	OHM	0.000014 Mohm	0.000014 Mohm
Short	30 Mohm	OHM	00.00083 Mohm	00.00083 Mohm

Table 4-7. 2-Wire Ohms Offset Test Limits

2-Wire Ohms Performance Tests Cont'd

4-32. 2-Wire Ohms Function - Gain Test

4-33. Equipment Required. Resistance Standards of 30 Ohms (± .2%), 300 Ohms (.02%), 3 Kohms (± .003%) 30 Kohms (± .001%), 300 Kohms (± .001%) 3 Mohms (± .001%), and 30 Mohms (± .009%) are required for this procedure.

1.Set the HP 3457A to the 2-wire ohms function (OHM) and the number of digits displayed (DIGITS DISP) to six.

2. Connect the Resistance Standard to the HP 3457A front panel HI and LO input terminals. (The connecting wires should be as short as possible to reduce lead resistance).

3. Use the Test Record to record the 30 Ohm, 300 Ohm, 3 Kohm, 30 Kohm, 300 Kohm, 3 Mohm and 30 Mohm readings.

4. If any of the readings are beyond the limits specified in Table 4-8 and on the Test Record, the instrument should be calibrated or repaired. Refer to Section V for calibration procedures.

5. Remove the Resistance standard from the HP 3457A front panel input terminals.

3457A Input	3457A Range	3457A Set Up	90 day limits		1 year limits	
			High	Low	High	Low
30 ohm	30 ohm	OHM	30.20530 ohm	29.79470 ohm	30.20560 ohm	29.795440ohm
300 ohm	300 ohm	OHM	300.2170 ohm	299.7830 ohm	300.2200 ohm	299.7800 ohm
3 Kohm	3 Kohm	OHM	3.000312 Kohm	2.999688 Kohm	3.000357 Kohm	2.999643 Kohm
30 Kohm	30 Kohm	OHM	30.00132 Kohm	29.99868 Kohm	30.00177 Kohm	29.99823 Kohm
300 Kohm	300 Kohm	OHM	300.0130 Kohm	299.9870 Kohm	300.0160 Kohm	299.9840 Kohm
3 Mohm	3 Mohm	OHM	3.000179 Mohm	2.999821 Mohm	3.000209 Mohm	2.999791 Mohm
30 Mohm	30 Mohm	OHM	30.00833 Mohm	29.99167 Mohm	30.01283 Mohm	29.98717 Mohm

Table 4-8. 2-Wire Ohms Gain Test Limits

4-Wire Ohms Performance Tests

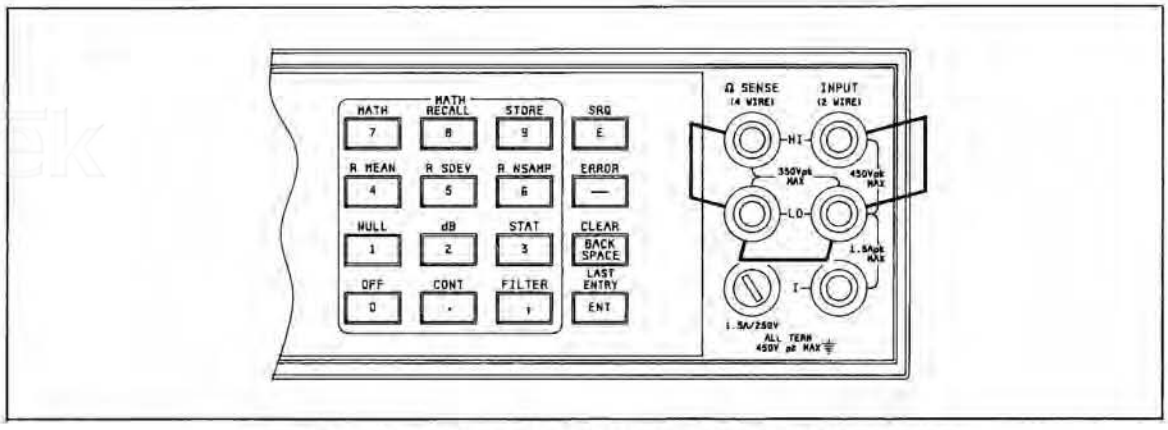

Figure 4-6. 4-Wire Ohms Offset Performance Test Connections

4-Wire Ohms Performance Tests Cont'd

4-34. 4-Wire Ohms Function - Offset Test

4-35. Equipment Required. A low thermal short (copper wire) is required for this procedure.

1. Set the HP 3457A to the 4-Wire Ohms Function (OHMF) and the number of digits displayed (DIGITS DISP) to six.

2. Short the front panel input terminals of the HP 3457A as shown in Figure 4-6.

3. Use the Test Record to record the offset readings of the 30 Ohm, 300 Ohm, 3 Kohm, 30 Kohm, 300 Kohm, 3 Mohm, and 30 Mohm ranges.

4. If any of the offset readings are beyond the limits specified in Table 4-9 and on the Test Record, the instrument should be calibrated or repaired. Refer to Section V of this manual for calibration procedures.

5. Remove the short from the front panel input terminals.

3457A Input	3457A Range	3457A Set Up	90 day limits	1 year limits
Short	30 ohm	OHMF	00.00335 ohm	00.00335 ohm
Short	300 ohm	OHMF	000.0035 ohm	000.0035 ohm
Short	3 Kohm	OHMF	0.000007 Kohm	0.000007 Kohm
Short	30 Kohm	OHMF	00.00007 Kohm	00.00007 Kohm
Short	300 Kohm	OHMF	000.0008 Kohm	000.0008 Kohm
Short	3 Mohm	OHMF	0.000014 Mohm	0.000014 Mohm
Short	30 Mohm	OHMF	00.00083 Mohm	00.00083 Mohm

Table 4-9. 4-Wire Ohms Offset Test Limits

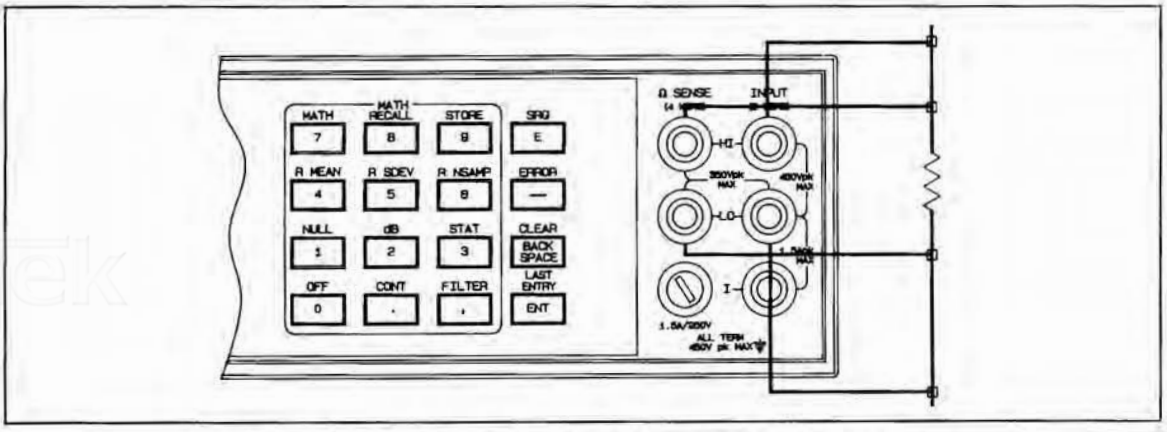

Figure 4-7. 4-Wire Ohms Gain Performance Test Connections

4-Wire Ohms Performance Tests Cont'd

4-36. 4-Wire Ohms Function - Gain Test

4-37. Equipment Required. Resistance Standards of 30 Ohms (± .004%), 300 Ohms (.002%), 3 Kohms (± .001%) 30 Kohms (± .001%), 300 Kohms (± .001%), 3 Mohms (± .001%) and 30 Mohms (± .009%) are required for this procedure.

1. Set the HP 3457A to the 4-Wire ohms function (OHMF) and the number of digits displayed (DIGITS DISP) to six.

2. Connect the appropriate Resistance Standard to the HP 3457A front panel input terminals as shown in Figure 4-7.

3. Use the Test Record to record the resistance readings for the 30 Ohm, 300 Ohm, 3 Kohm, 30 Kohm, 300 Kohm, 3 Mohm and 30 Mohm ranges.

4. If any of the readings are beyond the limits specified in Table 4-10 and on the Test Record, the instrument should be calibrated or repaired. Refer to Section V for calibration procedures.

5. Remove the Resistance Standard from the HP 3457A front panel input terminals.

3457A Input	3457A Range	3457A Set Up	90 day limits		1 year limits	
			High	Low	High	Low
30 ohm	30 ohm	OHMF	30.00530 ohm	29.99470 ohm	30.00560 ohm	29.99440 ohm
300 ohm	300 ohm	OHMF	300.0170 ohm	299.9830 ohm	300.0200 ohm	299.9800 ohm
3 Kohm	3 Kohm	OHMF	3.000112 Kohm	2.999888 Kohm	3.000157 Kohm	2.999843 Kohm
30 Kohm	30 Kohm	OHMF	30.00112 Kohm	29.99888 Kohm	30.00157 Kohm	29.99844 Kohm
300 Kohm	300 Kohm	OHMF	300.0128 Kohm	299.9872 Kohm	300.0158 Kohm	299.9842 Kohm
3 Mohm	3 Mohm	OHMF	3.000179 Mohm	2.999821 Mohm	3.000209 Mohm	2.999791 Mohm
30 Mohm	30 Mohm	OHMF	30.00833 Mohm	29.99167 Mohm	30.01283 Mohm	29.98717 Mohm

Table 4-10. 4-Wire Ohms Gain Test Limits

Frequency Counter Performance Tests

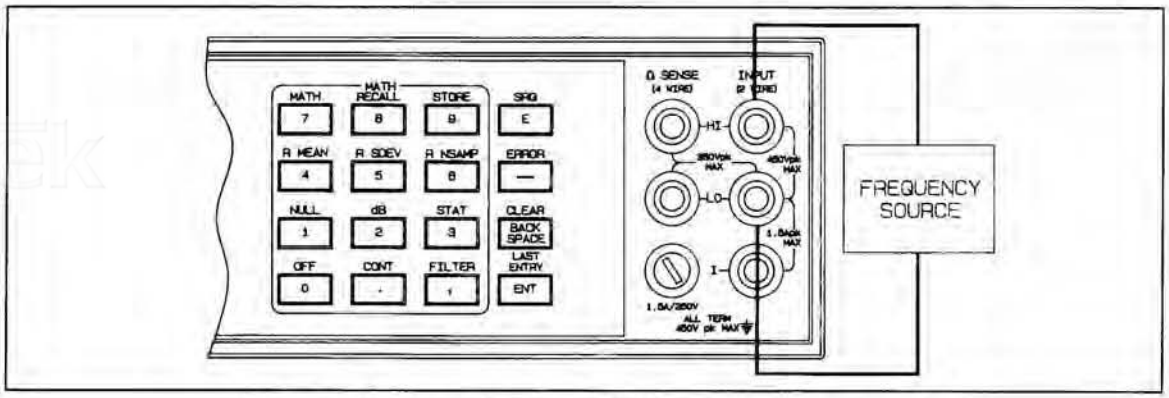

Figure 4-8. Frequency Counter Performance Test Connections

Frequency Counter Performance Tests Cont'd

4-38. Frequency Counter - Accuracy Test

4-39. Equipment Required. A Frequency Source capable of providing a 20 Hz (± .016%) and a 1 MHz (± .003%) sine-wave signal is required for this procedure.

1. Set the HP 3457A to the Frequency Function (FREQ).

2. Set the Frequency Standard for a 1 volt, 20 Hz sine-wave output signal and connect it to the HI and LO input terminals of the HP 3457A.

3. Use the Test Record to record the frequency readings at 20 Hz and 1 MHz.

4. If either of the readings are beyond the limits specified, the instrument should be calibrated or repaired. Refer to Section V of this manual for calibration procedures.

Rear Input Performance Tests (Standard Instrument)

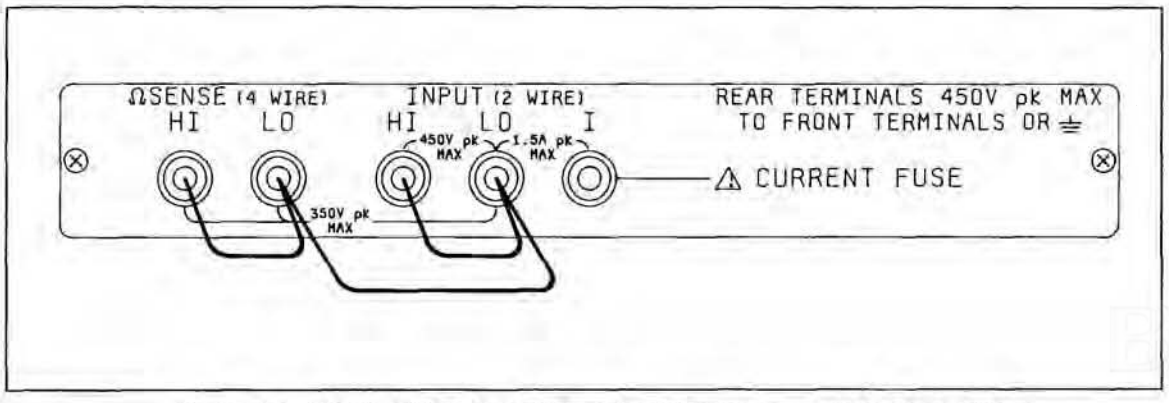

Figure 4-9. Standard Instrument Rear Input Performance Test Connections

4-40. Preliminary Steps

1. Short the Rear Input HI and LO terminals and the Ω Sense HI and LO terminals as shown in Figure 4-9.

2. Select the Rear Terminal Input. (Press the TERM configuration key, enter the number 2 and press the ENT key.

4-41. DC Voltage Function - Rear Terminal Offset Test

4-42. Equipment Required. A low thermal short (copper wire) is required for this procedure.

1. Set the HP 3457A to the DC Voltage function (DCV) and the number of digits displayed (DIGITS DISP) to six.

Rear Input Performance Tests (Standard Instrument) Cont'd

2. Test the HP 3457A input offset on the 300 V, 30 V, 3 V, 300 mV and 30 mV ranges and record the reading of each range on the Test Record provided at the end of this section. Begin with the 300 V range to allow any thermal voltages which might affect the readings on the lower ranges to dissipate.

3. If any of the offset readings are beyond the limits specified in Table 4-11 and on the Test Record, the instrument should be calibrated or repaired. Refer to Section V for calibration procedures.

3457A Input	3457A Range	3457A Set Up	90 day limits		1 year limits	
			High	Low	High	Low
Short	300 V	DCV	+000.0007 V	-000.0007 V	+000.0007 V	-000.0007 V
Short	30 V	DCV	+ 00.00020 V	- 00.00020 V	+ 00.00020 V	- 00.00020 V
Short	3 V	DCV	+ 0.000007 V	- 0.000007 V	+ 0.000007 V	- 0.000007 V
Short	300 mV	DCV	+000.0040 mV	-000.0040 mV	+000.0040 mV	-000.0040 mV
Short	30 mV	DCV	+ 00.00385 mV	- 00.00385 mV	+ 00.00385 mV	- 00.00385 mV

Table 4-11. DC Voltage Offset Test Limits (Rear Terminals)

4-43. DC Current Function - Rear Terminal Offset Test

4-44. Equipment Required. This procedure does not require any test equipment.

1. Set the HP 3457A to the DC Current function (DCI), 300 uA range, and the number of digits displayed (DIGITS DISP) to six.

2. Use the Test Record to record the current offset readings on the 300 uA, 3 mA, 30 mA, 300 mA and 1 A ranges.

3. If any of the offset readings are beyond the limits specified in Table 4-12 and on the Test Record, the instrument should be calibrated or repaired. Refer to Section V for calibration procedures.

3457A Input	3457A Range	3457A Set Up	90 day limits		1 year limits	
			High	Low	High	Low
Open	300 uA	DCI	+000.0104 uA	-000.0104 uA	+000.0104 uA	-000.0104 uA
Open	3 mA	DCI	+0.000104 mA	-0.000104 mA	+0.000104 mA	-0.000104 mA
Open	30 mA	DCI	+00.00104 mA	-00.00104 mA	+00.00104 mA	-00.00104 mA
Open	300 mA	DCI	+000.0204 mA	-000.0204 mA	+000.0204 mA	-000.0204 mA
Open	1 A	DCI	+0.000604 A	-0.000604 A	+0.000604 A	-0.000604 A

Table 4-12. DC Current Offset Test Limits (Rear Terminals)

4-45. 2-Wire Ohms Function - Rear Terminal Offset Test

4-46. Equipment Required. A low thermal short (copper wire) is required for this procedure.

1. Set the HP 3457A to the 2-Wire Ohms Function, 30 Ohm range and the number of digits displayed (DIGITS DISP) to six.

Rear Input Performance Tests (Standard Instrument) Cont'd

2. Use the Test Record to record the offset readings for the 30 Ohm, 300 Ohm, 3 Kohm, 30 Kohm, 300 Kohm, 3 Mohm and 30 Mohm ranges.

3. If any of the offset readings are beyond the limits specified in Table 4-13 and on the Test Record, the instrument should be calibrated or repaired. Refer to Section V for calibration procedures.

3457A Input	3457A Range	3457A Set Up	90 day limits	1 year limits
Short	30 ohm	OHM	00.20335 ohm	00.20335 ohm
Short	300 ohm	OHM	000.2035 ohm	000.2035 ohm
Short	3 Kohm	OHM	0.000207 Kohm	0.000207 Kohm
Short	30 Kohm	OHM	00.00027 Kohm	00.00027 Kohm
Short	300 Kohm	OHM	000.0010 Kohm	000.0010 Kohm
Short	3 Mohm	OHM	0.000014 Mohm	0.000014 Mohm
Short	30 Mohm	OHM	00.00083 Mohm	00.00083 Mohm

Table 4-13. 2-Wire Ohms Offset Test Limits (Rear Terminals)

4-47. 4-Wire Ohms Function - Offset Test

4-48. Equipment Required. A low thermal short (copper wire) is required for this procedure.

1. Set the HP 3457A to the 4-Wire Ohms Function (OHMF) and the number of digits displayed (DIGITS DISP) to six.

2. Use the Test Record to record the offset readings of the 30 Ohm, 300 Ohm, 3 Kohm, 30 Kohm, 300 Kohm, 3 Mohm, and 30 Mohm ranges.

3. If any of the offset readings are beyond the limits specified in Table 4-14 and on the Test Record, the instrument should be calibrated or repaired. Refer to Section V for calibration procedures.

3457A Input	3457A Range	3457A Set Up	90 day limits	1 year limits
Short	30 ohm	OHMF	00.00335 ohm	00.00335 ohm
Short	300 ohm	OHMF	000.0035 ohm	000.0035 ohm
Short	3 Kohm	OHMF	0.000007 Kohm	0.000007 Kohm
Short	30 Kohm	OHMF	00.00007 Kohm	00.00007 Kohm
Short	300 Kohm	OHMF	000.0008 Kohm	000.0008 Kohm
Short	3 Mohm	OHMF	0.000014 Mohm	0.000014 Mohm
Short	30 Mohm	OHMF	00.00083 Mohm	00.00083 Mohm

Table 4-14. 4-Wire Ohms Offset Test Limits (Rear Terminals)

Rear Input Performance Tests (44491A General Purpose Relay Assy)

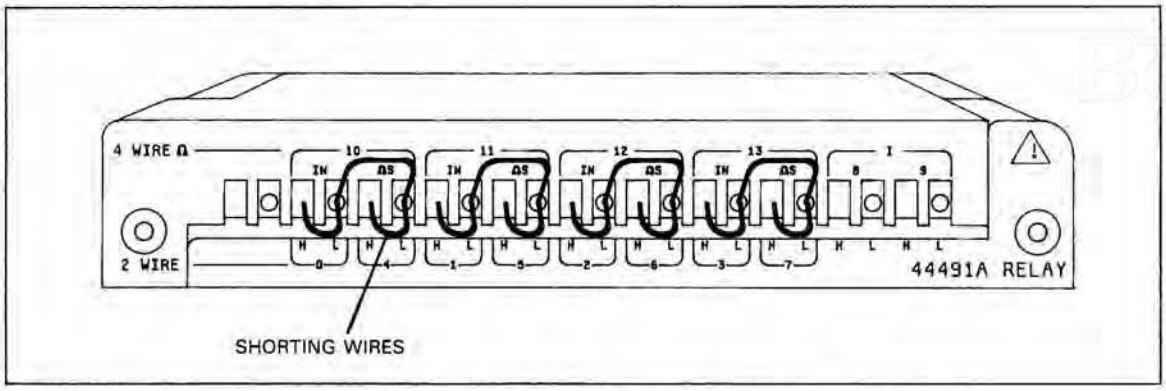

Figure 4-10. HP 44491A Terminal Block Assembly Connections

4-49. Preliminary Steps

1. Short the Rear Input HI and LO terminals and the Ω Sense HI and LO terminals as shown in Figure 4-9.

2. Select the Rear Terminal Input. (Press the TERM configuration key, enter the number 2 and press the ENT key.

NOTE

The 44491A Relay Assembly and the 3457A Multimeter must have been calibrated as a unit for these tests to apply. Calibration procedures are provided in Section V of this manual.

4-50. DC Voltage Function - 44491A Offset Test

4-51. Equipment Required. Low thermal (copper) shorting wires are required for this procedure.

1. Set the HP 3457A to the DC Voltage function (DCV) and the number of digits displayed (DIGITS DISP) to six.

2. Close channel 0. (Press the CHAN configuration key, enter the number 0 and press the ENT key).

3. Test the input offset on the 300 V, 30 V, 3 V, 300 mV and 30 mV ranges and record the reading of each range on the Test Record provided at the end of this section. Begin with the 300 V range to allow any thermal voltages which might affect the readings on the lower ranges to dissipate.

4. Test the HP 3457A input offset on channels 0 through 7 with the instrument set to the 30 mV range. Record the reading of each channel on the Test Record provided at the end of this section.

5. If any of the offset readings are beyond the limits specified in Table 4-15 and on the Test Record, the instrument should be calibrated or repaired. Refer to Section V for calibration procedures.

Rear Input Performance Tests (44491A Relay Assy.) Cont'd

3457A Input	3457A Range	3457A Set Up	Test Limits High	Test Limits Low
Short	300 V	DCV	+000.0007 V	-000.0007 V
Short	30 V	DCV	+ 00.00020 V	- 00.00020 V
Short	3 V	DCV	+ 0.000010 V	- 0.000010 V
Short	300 mV	DCV	+000.0070 mV	-000.0070 mV
Short	30 mV	DCV	+ 00.00685 mV	- 00.00685 mV

Table 4-15. DC Voltage Offset Test Limits (44491A)

4-52. 2-Wire Ohms Function - 44491A Offset Test Limits

4-53. Equipment Required. Low thermal (copper) shorting wires are required for this procedure.

1. Set the HP 3457A to the 2-Wire Ohms Function, 30 Mohm range. Set the offset compensation (OFFSET COMP) on, and the number of digits displayed (DIGITS DISP) to six.

2. Close channel 0. (Press the CHAN configuration key, enter the number 0 and press the ENT key).

3. Use the Test Record to record the offset readings for the 30 Mohm, 3 Mohm, 300 Kohm, 30 Kohm, 3 Kohm, 300 Ohm and 30 Ohm ranges.

4. Test the ohms offset on channels 0 through 7 with the instrument set to the 30 Ohm range. Record the reading of each channel on the Test Record provided at the end of this section.

5. If any of the offset readings are beyond the limits specified in Table 4-16 and on the Test Record, the instrument should be calibrated or repaired. Refer to Section V for calibration procedures.

3457A Input	3457A Range	3457A Set Up	Test Limits
Short	30 ohm	OHM	02.20635 ohm
Short	300 ohm	OHM	002.2065 ohm
Short	3 Kohm	OHM	0.002210 Kohm
Short	30 Kohm	OHM	00.00230 Kohm
Short	300 Kohm	OHM	000.0033 Kohm
Short	3 Mohm	OHM	0.000019 Mohm
Short	30 Mohm	OHM	00.00086 Mohm

Table 4-16. 2-Wire Ohms Offset Test Limits (44491A)

4-54. 4-Wire Ohms Function - 44491A Offset Test Limits

4-55. Equipment Required. Low thermal (copper) shorting wires are required for this procedure.

1. Set the HP 3457A to the 4-Wire Ohms Function (OHMF). Set the offset compensation (OFFSET COMP) on, and the number of digits displayed (DIGITS DISP) to six.

Rear Input Performance Tests (44491A Relay Assy.) Cont'd

2. Close channel 10. (Press the CHAN configuration key, enter the number 10 and press the ENT key).

3. Use the Test Record to record the offset readings of the 30 Ohm, 300 Ohm, 3 Kohm, 30 Kohm, 300 Kohm, 3 Mohm, and 30 Mohm ranges.

4. If any of the offset readings are beyond the limits specified in Table 4-17 and on the Test Record, the instrument should be calibrated or repaired. Refer to Section V for calibration procedures.

3457A Input	3457A Range	3457A Set Up	Test Limits
Short	30 ohm	OHMF	00.00635 ohm
Short	300 ohm	OHMF	000.0065 ohm
Short	3 Kohm	OHMF	0.000010 Kohm
Short	30 Kohm	OHMF	00.00010 Kohm
Short	300 Kohm	OHMF	000.0011 Kohm
Short	3 Mohm	OHMF	0.000017 Mohm
Short	30 Mohm	OHMF	00.00086 Mohm

Table 4-17. 4-Wire Ohms Offset Test Limits (44491A)

4-56. DC Current Function - 44491A Offset Test Limits

4-57. Equipment Required. This procedure does not require any test equipment.

1. Set the HP 3457A to the DC Current function (DCI), 300 uA range, and the number of digits displayed (DIGITS DISP) to six.

2. Use the Test Record to record the current offset readings on the 300 uA, 3 mA, 30 mA, 300 mA and 1 A ranges.

3. If any of the offset readings are beyond the limits specified in Table 4-18 and on the Test Record, the instrument should be calibrated or repaired. Refer to Section V for calibration procedures.

3457A Input	3457A Range	3457A Set Up	Test Limits High	Test Limits Low
Open	300 uA	DCI	+000.0104 uA	-000.0104 uA
Open	3 mA	DCI	+0.000104 mA	-0.000104 mA
Open	30 mA	DCI	+00.00104 mA	-00.00104 mA
Open	300 mA	DCI	+000.0204 mA	-000.0204 mA
Open	1 A	DCI	+0.000604 A	-0.000604 A

Table 4-18. DC Current Offset Test Limits (44491A)

Rear Input Performance Tests (44492A 10 Channel Multiplex Assy)

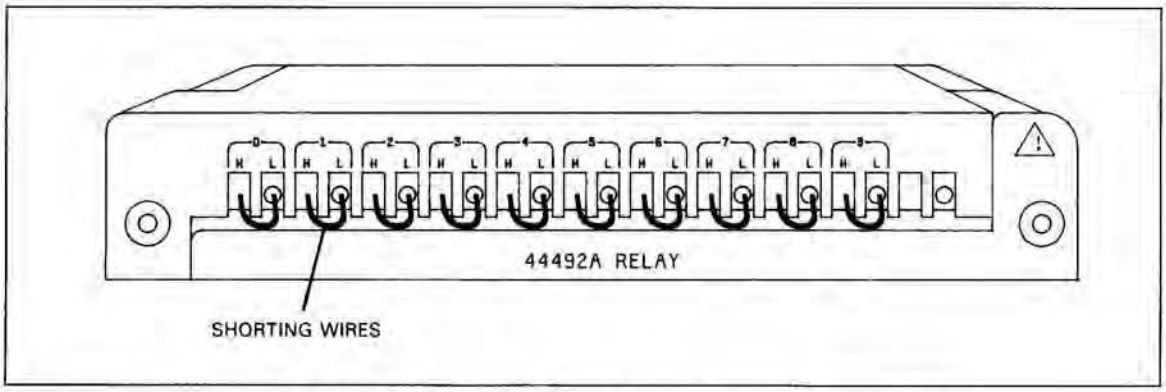

Figure 4-11. HP 44492A Terminal Block Assembly Connections

4-58. Preliminary Steps

1. Connect shorting wires to the inputs of the Terminal Block assembly as shown in Figure 4-11.

2. Select the Scanner Input. (Press the TERM configuration key, enter the number 2 and press the ENT key).

NOTE

The 44492A Multiplexer Assembly and the 3457A Multimeter must have been calibrated as a unit for these tests to apply. Calibration procedures are provided in Section V of this manual.

4-59. DC Voltage Function - 44492A Offset Test

4-60. Equipment Required. A low thermal (copper) shorting wire is required for this procedure.

1. Set the HP 3457A to the DC Voltage function (DCV) and the number of digits displayed (DIGITS DISP) to six.

2. Close channel 0. (Press the CHAN configuration key, enter the number 0 and press the ENT key).

3. Test the HP 3457A input offset on the 300 V, 30 V, 3 V, and 300 mV ranges and record the reading of each range on the Test Record provided at the end of this section. Begin with the 300 V range to allow any thermal voltages which might affect the readings on the lower ranges to dissipate.

4. Test the HP 3457A input offset on channels 0 through 9 with the instrument set to the 30 mV range. Record the reading of each channel on the Test Record provided at the end of this section.

5. If any of the offset readings are beyond the limits specified in Table 4-19 and on the Test Record, the instrument should be calibrated or repaired. Refer to Section V of this manual for calibration procedures.

Rear Input Performance Tests (44492A Multiplex Assy.) Cont'd

3457A Input	3457A Range	3457A Set Up	Test Limits High	Test Limits Low
Short	300 V	DCV	+000.0007 V	-000.0007 V
Short	30 V	DCV	+ 00.00020 V	- 00.00020 V
Short	3 V	DCV	+ 0.000010 V	- 0.000010 V
Short	300 mV	DCV	+000.0070 mV	-000.0070 mV

Table 4-19. DC Voltage Offset Test Limits (44492A)

4-61. 2-Wire Ohms Function - 44492A Offset Test Limits

4-62. Equipment Required. A low thermal (copper) shorting wire is required for this procedure.

1. Set the HP 3457A to the 2-Wire Ohms Function, 30 Mohm range, set the offset compensation (OFFSET COMP) on, and the number of digits displayed (DIGITS DISP) to six.

2. Close channel 0. (Press the CHAN configuration key, enter the number 0 and press the ENT key).

3. Use the Test Record to record the offset readings for the 30 Mohm, 3 Mohm, 300 Kohm, 30 Kohm, 3 Kohm and 300 Ohm ranges.

4. Test the ohms offset on channels 0 through 9 with the instrument set to the 300 Ohm range. Record the reading of each channel on the Test Record provided at the end of this section.

5. If any of the offset readings are beyond the limits specified in Table 4-20 and on the Test Record, the instrument should be calibrated or repaired. Refer to Section V of this manual for calibration procedures.

3457A Input	3457A Range	3457A Set Up	Test Limits
Short	300 ohm	OHM	004.2065 ohm
Short	3 Kohm	OHM	0.004210 Kohm
Short	30 Kohm	OHM	00.00430 Kohm
Short	300 Kohm	OHM	000.0053 Kohm
Short	3 Mohm	OHM	0.000021 Mohm
Short	30 Mohm	OHM	00.00086 Mohm

Table 4-20. 2-Wire Ohms Offset Test Limits (44492A)

4-63. OPERATIONAL VERIFICATION TESTS

4-64. The Operational Verification Tests are an abbreviated version of the Performance Tests. The purpose of these tests is to provide a more rapid means of testing the performance of the HP 3457A. The Operational Verification Tests are designed to provide a 90% confidence that the instrument is operational and that it meets its specifications.

DC Voltage Operational Verification Tests

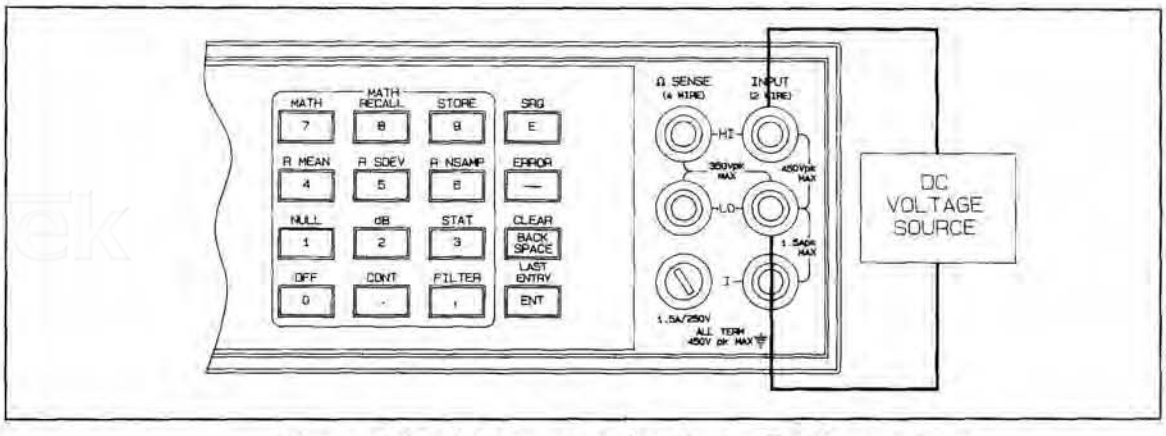

Figure 4-12. DCV Operational Verification Test Connections

NOTE

The temperature of the environment where these tests are to be performed must be within ±5° C of the temperature where the instrument was calibrated. The instrument was calibrated at the factory in an area with a temperature of 20° C (± 1° C).

4-65. Preliminary Steps

1. Turn the instrument ON and allow a one hour warm-up period.

2. Be certain all external inputs are disconnected from the HP 3457A. Run the TEST routine. The test result must read "SELF TEST OK". If the display shows "TEST FAILED", the instrument probably needs repair.

3. Run the AUTO CAL routine. (Press the AUTO CAL key, enter the number 1 and press the ENT key).

4-66. DC Voltage Function - Offset Test

4-67. Equipment Required. A low thermal short (copper wire) is required for this procedure.

1. Connect a low thermal short across the Front Panel HI and LO Input Terminals.

DC Voltage Operational Verification Tests Cont'd

2. Set the HP 3457A to the DC Voltage function (DCV) and the number of digits displayed (DIGITS DISP) to six.

3. Test the HP 3457A input offset on the 30 V, 3 V, and 300 mV ranges and record the reading of each range on the Test Record provided at the end of this section. Begin with the 30 V range to allow any thermal voltages which might affect the readings on the lower ranges to dissipate.

4. If any of the offset readings are beyond the limits specified in Table 4-21 and on the Test Record, the instrument should be calibrated. Refer to Section V of this manual for calibration procedures.

5. Remove the short from the Front Panel Input Terminals.

4-68. DC Voltage Function - Gain Test

4-69. Equipment Required. A set of low thermal cables and a DC Voltage Standard capable of providing 300 mV (± .0012%), 3 V (± .0006%) and 30 V (± .0013%) is required for this test.

1. Set the output of the DC Voltage Standard to 300 mV and connect it to the HP 3457A front panel HI and LO Input Terminals.

2. Use the Test Record to record the full-scale readings for the 300 mV, 3 V, and 30 V ranges. Begin with the 30 V range.

3. If any of the full-scale readings are beyond the limits specified in Table 4-21 and on the Test Record, the instrument should be calibrated. Refer to Section V of this manual for calibration procedures.

4. Reduce the output of the Voltage Standard to 0 volts and disconnect it from the HP 3457A.

3457A Input	3457A Range	3457A Set Up	90 day limits		1 year limits	
			High	Low	High	Low
Short	30 V	DCV	+ 00.00020 V	- 00.00020 V	+ 00.00020 V	- 00.00020 V
Short	3 V	DCV	+ 0.000007 V	- 0.000007 V	+ 0.000007 V	- 0.000007 V
Short	300 mV	DCV	+000.0040 mV	-000.0040 mV	+000.0040 mV	-000.0040 mV
300 mV	300 mV	DCV	+300.0115 mV	+299.9885 mV	+300.0145 mV	+299.9855 mV
3 V	3 V	DCV	+ 3.000058 V	+ 2.999942 V	+ 3.000082 V	+ 2.999918 V
30 V	30 V	DCV	+ 30.00125 V	+ 29.99875 V	+ 30.00140 V	+ 29.99860 V

Table 4-21. DC Voltage Test Limits

AC Voltage Operational Verification Tests

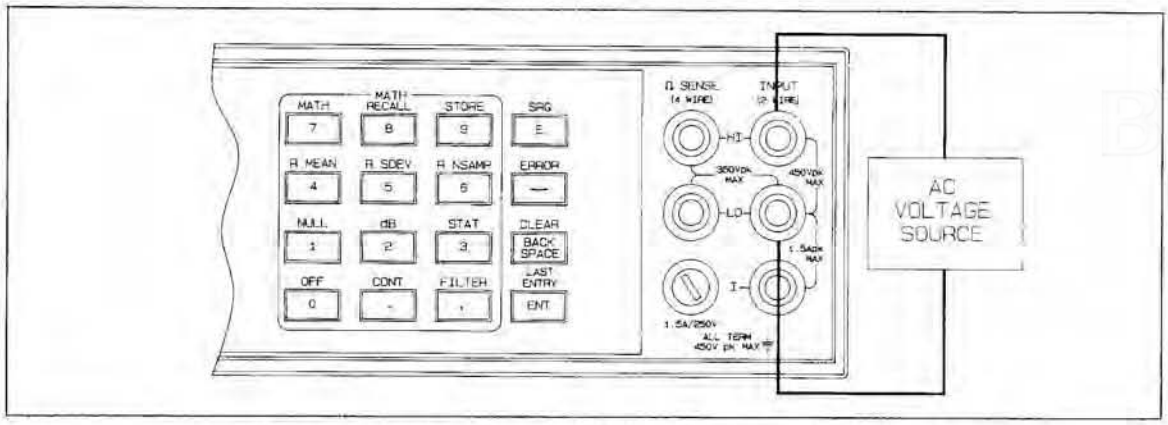

Figure 4-13. ACV Operational Verification Test Connections

4-70. AC Voltage Function - Gain Test

4-71. Equipment Required. An AC Signal Source capable of providing sine-wave voltages of 300 mV, 3 V, and 30 V (± 0.05%) at a frequency of 1 KHz is required for the following procedure.

1. Set the HP 3457A to the AC Voltage function (ACV).

2. Connect the AC Signal Source to the HP 3457A front panel HI and LO input terminals. Set the Signal Source for an output voltage of 30 V at a frequency of 1 KHz.

3. Use the Test Record to record the 300 mV, 3 V and 30 V full-scale readings beginning with the 30 V range.

4. If any of the gain readings are beyond the limits specified in Table 4-22 and on the Test Record, the instrument should be calibrated or repaired. Refer to Section V for calibration procedures.

3457A Input	Input Freq.	3457A Range	3457A Set Up	90 day limits High	90 day limits Low
300 mV	1 kHz	300 mV	ACV	300.5020 mV	299.4980 mV
3 V	1 kHz	3 V	ACV	3.005100 V	2.994900 V
30 V	1 kHz	30 V	ACV	30.05020 V	29.94980 V

Table 4-22. AC Gain Test Limits

4-72. AC Voltage Function - Frequency Response Test

4-73. Equipment Required. An AC Signal Source capable of providing sine-wave voltages of 300 mV and 3 V (±.2%) at 20 KHz, 300 mV and 3 V (±.1%) at 100 Hz and 300 mV and 3 V (±.3%) at 20 Hz is required for this test.

1. Connect the AC Signal Source to the HP 3457A front panel HI and LO input terminals. Set the AC Voltage Standard for an output voltage of 300 mV at a frequency of 20 KHz.

AC Voltage Operational Verification Tests Cont'd

2. Set the HP 3457A to the AC Voltage function (ACV), the range to 3 V and the AC Bandwidth to AC Fast. *(To change the Bandwidth - Press the SHIFT key, then the NPLC / A configuration key. Use the ↓ scroll key to display ACBAND. Enter a number greater than 400 and press the ENT key).*

3. Use the Test Record to record the 3 V 1/10 full-scale reading at 20 KHz.

4. Set the AC Voltage Standard for an output of 3 V at 20 KHz. Use the Test Record to record the 3 V, 20 KHz full-scale reading.

5. Set the HP 3457A AC Bandwidth to AC Slow. *(Press the Blue SHIFT key then the NPLC / A configuration key. Use the ↓ scroll key to display ACBAND. Enter a number smaller than 400 and press the ENT key).*

6. Set the AC Voltage Standard for an output of 3 V at 100 Hz. Use the Test Record to record the 3 V, 100 Hz full-scale reading.

7. Set the AC Voltage Standard for an output of 3 V at 20 Hz. Use the Test Record to record the 3 V, 20 Hz full-scale reading.

8. If any of the readings are beyond the limits specified in Table 4-23 and on the Test Record, the instrument should be calibrated or repaired. Refer to Section V for calibration procedures.

3457A Input	Input Freq.	3457A Range	3457A Set Up	90 day limits High	90 day limits Low
300 mV	20 kHz	3 V	ACF	0.301510 V	0.298490 V
3 V	20 kHz	3 V	ACF	3.005320 V	2.994680 V
3 V	100 Hz	3 V	ACS	3.007420 V	2.992580 V
3 V	20 Hz	3 V	ACS	3.017920 V	2.982080 V

Table 4-23. AC Frequency Response Test Limits

DC Current Operational Verification Tests

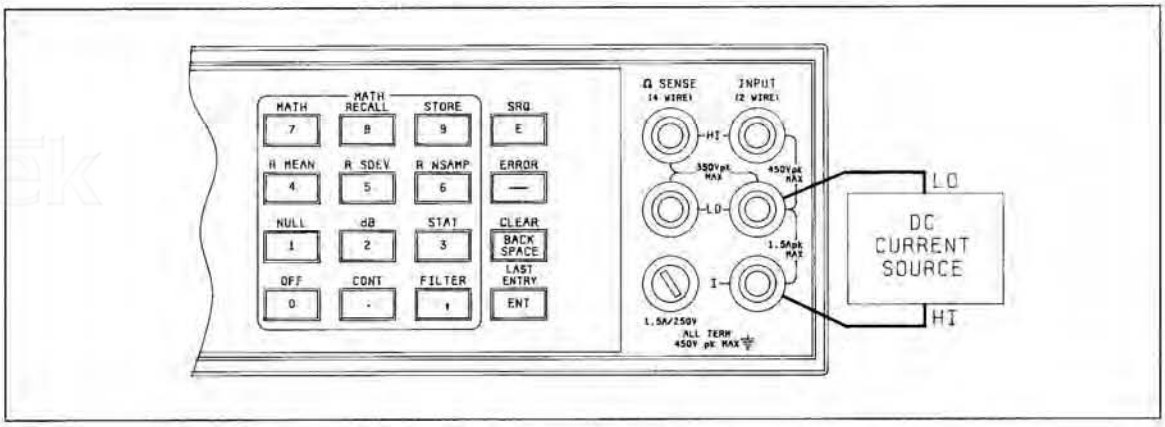

Figure 4-14. DCI Operational Verification Test Connections

DC Current Operational Verification Tests Cont'd

3457A Input	3457A Range	3457A Set Up	90 day limits High	90 day limits Low	1 year limits High	1 year limits Low
Open	3 mA	DCI	+0.000104 mA	-0.000104 mA	+0.000104 mA	-0.000104 mA
Open	1 A	DCI	+00.00604 mA	-00.00604 mA	+00.00604 mA	-00.00604 mA
3 mA	3 mA	DCI	3.000704 mA	2.999296 mA	3.001304 mA	2.998696 mA
300 mA	1 A	DCI	0.300814 A	0.299186 A	0.300844 A	0.299156 A

Table 4-24. DC Current Test Limits

4-74. DC Current Function - Offset Test

4-75. Equipment Required. This procedure does not require any test equipment.

1. Set the HP 3457A to the DC Current function (DCI), 3 mA range, and the number of digits displayed (DIGITS DISP) to six.

2. Use the Test Record to record the current offset readings on the 3 mA and 1 A ranges.

3. If either of the offset readings are beyond the limits specified in Table 4-24 and on the Test Record, the instrument should be calibrated or repaired. Refer to Section V for calibration procedures.

4-76. DC Current Function - Gain Test

4-77. Equipment Required. A DC Current Source capable of providing currents of 3 mA and 300 mA (± .007%) is required for the following procedure.

1. Set the DC Current Source for an output of 0 mA and connect it to the HP 3457A front panel **I** and **LO** input terminals.

2. Set the HP 3457A to the 3 mA range and the number of digits displayed (DIGITS DISP) to six. Set the DC Current Source to 3 mA.

3. Use the Test Record to record the 3 mA full-scale current reading.

4. Set the HP 3457A to the 1 A range and set the DC Current Source for an output of 300 mA.

5. Use the Test Record to record the 300 mA reading.

6. If either of the readings are beyond the limits specified in Table 4-24 and on the Test Record, the instrument should be calibrated or repaired. Refer to Section V for calibration procedures.

7. Set the output of the DC Current Source to 0 and disconnect it from the HP 3457A input terminals.

AC Current Operational Verification Tests

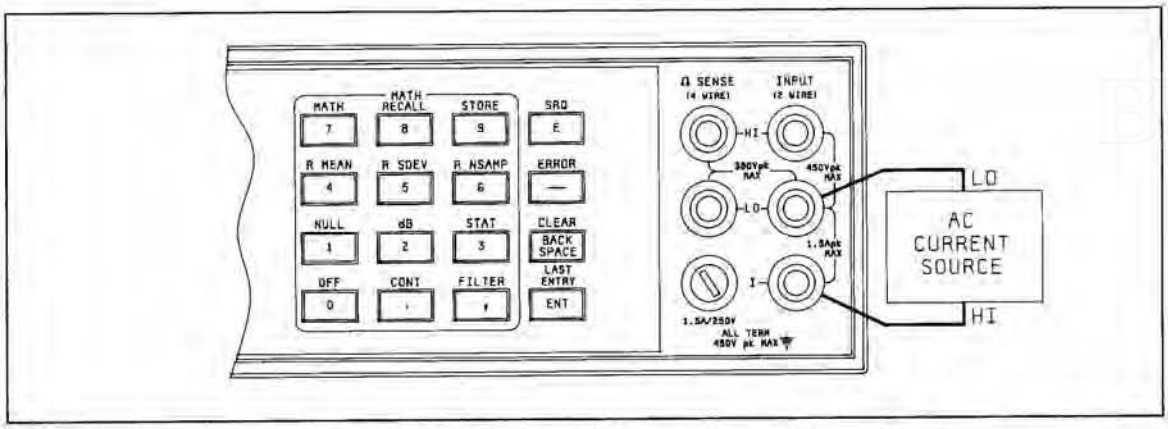

Figure 4-15. ACI Operational Verification Test Connections

4-78. AC Current Function - Gain Test

4-79. Equipment Required, An AC Current Source capable of providing a current of 300 mA (± .1%) at a frequency of 1 KHz is required for the following test.

1. Set the AC Current source for an output of 0 mA and connect it to the HP 3457A front panel **I** and **LO** input terminals.

2. Set the HP 3457A to the 300 mA range and the number of digits displayed (DIGITS DISP) to six. Set the AC Current Source for an output of 300 mA at a frequency of 1 KHz.

3. Use the Test Record to record the 300 mA full-scale reading.

4. If the full-scale reading is beyond the limits specified on the Test Record (301.0300 mA - 298.9700 mA), the instrument should be calibrated or repaired. Refer to Section V for calibration procedures.

5. Reduce the output of the AC Current Source to 0 and disconnect it from the HP 3457A input terminals.

2-Wire Ohms Operational Verification Tests

4-80. 2-Wire Ohms Function - Offset Test

4-81. Equipment Required. A low thermal short (copper wire) is required for this procedure.

1. Connect a low thermal short across the HP 3457A front panel HI and LO input terminals.

2. Set the HP 3457A to the 2-Wire Ohms Function, 3 Kohm range and the number of digits displayed (DIGITS DISP) to six.

3. Use the Test Record to record the offset readings for the 3 Kohm, 30 Kohm and 300 Kohm ranges.

2-Wire Ohms Operational Verification Tests Cont'd

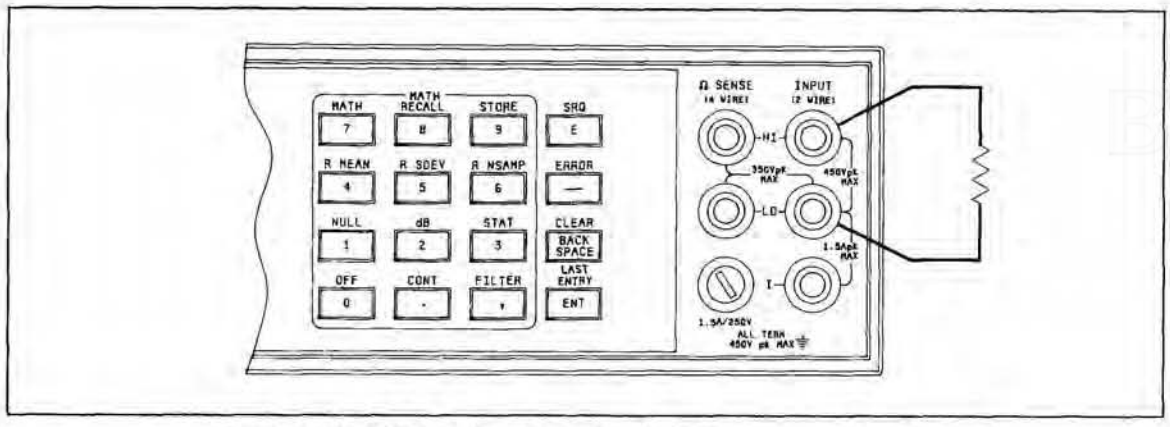

Figure 4-16. 2-Wire Ohms Operational Verification Test Connections

4. If any of the offset readings are beyond the limits specified in Table 4-25 and on the Test Record, the instrument should be calibrated. Refer to Section V of this manual for calibration procedures.

5. Remove the short from the front panel input terminals.

3457A Input	3457A Range	3457A Set Up	90 day limits	1 year limits
Short	3 Kohm	OHM	0.000207 Kohm	0.000207 Kohm
Short	30 Kohm	OHM	00.00027 Kohm	00.00027 Kohm
Short	300 Kohm	OHM	000.0010 Kohm	000.0010 Kohm

Table 4-25. 2-Wire Ohms Offset Test Limits

4-82. 2-Wire Ohms Function - Gain Test

4-83. Equipment Required. Resistance Standards of 3 Kohms (± .001%), 30 Kohms (± .001%), and 300 Kohms (± .001%) are required for this procedure.

1.Set the HP 3457A to the 2-wire ohms function (OHM) and the number of digits displayed (DIGITS DISP) to six.

2. Connect the Resistance Standard to the HP 3457A front panel HI and LO input terminals. (The connecting wires should be as short as possible to reduce lead resistance).

3. Use the Test Record to record the 3 Kohm, 30 Kohm and 300 Kohm full-scale readings.

4. If any of the readings are beyond the limits specified in Table 4-26 and on the Test Record, the instrument should be calibrated. Refer to Section V of this manual for calibration procedures.

5. Remove the Resistance standard from the HP 3457A front panel input terminals.

2-Wire Ohms Operational Verification Tests Cont'd

3457A Input	3457A Range	3457A Set Up	90 day limits High	90 day limits Low	1 year limits High	1 year limits Low
3 Kohm	3 Kohm	OHM	3.000312 Kohm	2.999688 Kohm	3.000357 Kohm	2.999643 Kohm
30 Kohm	30 Kohm	OHM	30.00132 Kohm	29.99868 Kohm	30.00177 Kohm	29.99823 Kohm
300 Kohm	300 Kohm	OHM	300.0130 Kohm	299.9870 Kohm	300.0160 Kohm	299.9840 Kohm

Table 4-26. 2-Wire Ohms Gain Test Limits

4-Wire Ohms Operational Verification Tests

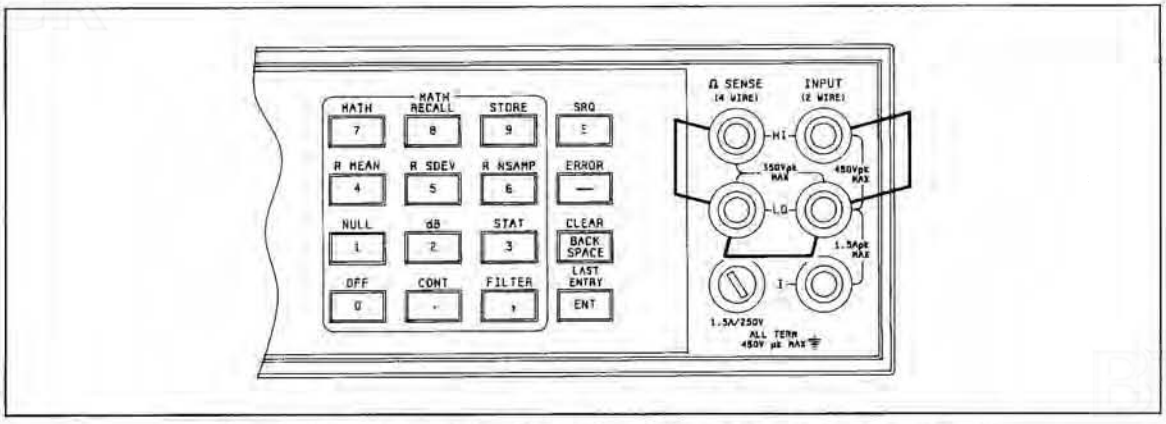

Figure 4-17. 4-Wire Ohms Operational Verification Test Connections

4-84. 4-Wire Ohms Function - Offset Test

4-85. Equipment Required. A low thermal short (copper wire) is required for this procedure.

1. Set the HP 3457A to the 4-Wire Ohms Function (OHMF) and the number of digits displayed (DIGITS DISP) to six.

2. Short the front panel input terminals of the HP 3457A as shown in Figure 4-17.

3. Use the Test Record to record the offset readings of the 3 Kohm, 30 Kohm and 300 Kohm ranges.

4. If any of the offset readings are beyond the limits specified in Table 4-27 and on the Test Record, the instrument should be calibrated. Refer to Section V of this manual for calibration procedures.

5. Remove the short from the front panel input terminals.

4-Wire Ohms Operational Verification Tests Cont'd

3457A Input	3457A Range	3457A Set Up	90 day limits	1 year limits
Short	3 Kohm	OHMF	0.000007 Kohm	0.000007 Kohm
Short	30 Kohm	OHMF	00.00007 Kohm	00.00007 Kohm
Short	300 Kohm	OHMF	000.0008 Kohm	000.0008 Kohm

Table 4-27. 4-Wire Ohms Offset Test Limits

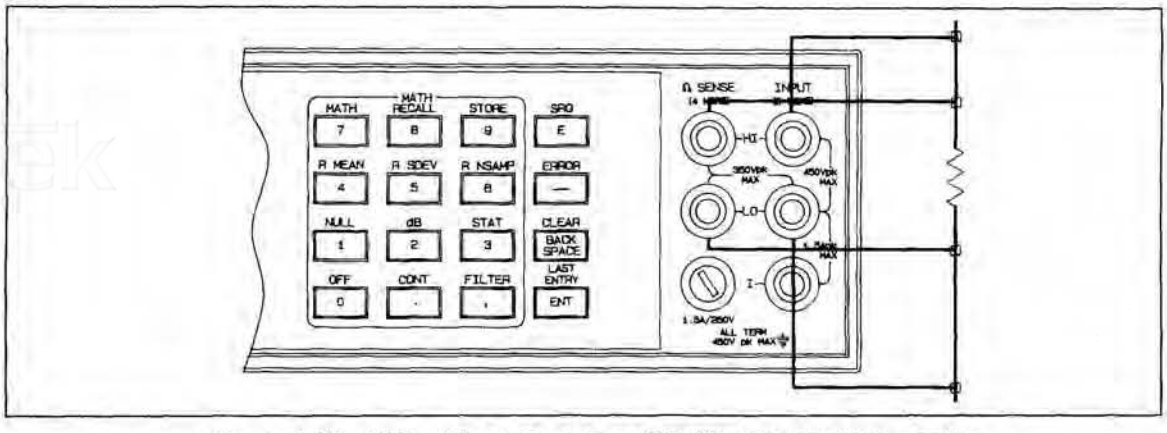

Figure 4-18. 4-Wire Ohms Operational Verification Test Connections

4-86. 4-Wire Ohms Function - Gain Test

4-87. Equipment Required. Resistance Standards of 3 Kohms (± .001%), 30 Kohms (± .001%) and 300 Kohms (± .001%) are required for this procedure.

1. Set the HP 3457A to the 4-Wire ohms function (OHMF) and the number of digits displayed (DIGITS DISP) to six.

2. Connect the appropriate Resistance Standard to the HP 3457A front panel input terminals as shown in Figure 4-18.

3. Use the Test Record to record the resistance readings for the 3 Kohm, 30 Kohm and 300 Kohm ranges.

4. If any of the readings are beyond the limits specified in Table 4-28 and on the Test Record, the instrument should be calibrated. Refer to Section V of this manual for calibration procedures.

5. Remove the Resistance Standard from the HP 3457A front panel input terminals.

4-Wire Ohms Operational Verification Tests Cont'd

3457A Input	3457A Range	3457A Set Up	90 day limits High	90 day limits Low	1 year limits High	1 year limits Low
3 Kohm	3 Kohm	OHMF	3.000112 Kohm	2.999888 Kohm	3.000157 Kohm	2.999843 Kohm
30 Kohm	30 Kohm	OHMF	30.00112 Kohm	29.99888 Kohm	30.00157 Kohm	29.99844 Kohm
300 Kohm	300 Kohm	OHMF	300.0128 Kohm	299.9872 Kohm	300.0158 Kohm	299.9842 Kohm

Table 4-28. 4-Wire Ohms Gain Test Limits

Frequency Counter Operational Verification Tests

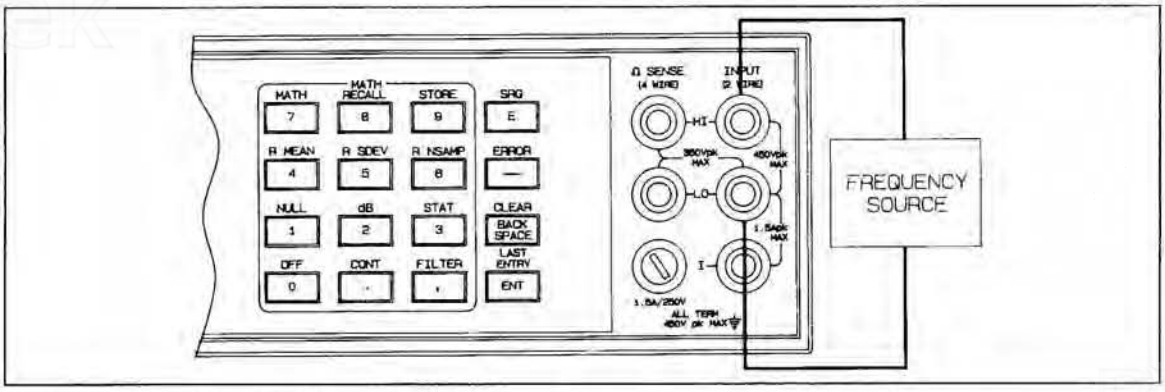

Figure 4-19. Frequency Counter Operational Verification Test Connections

4-88. Frequency Counter - Accuracy Test

4-89. Equipment Required. A Frequency Source capable of providing a 20 Hz (± .01%) and a 1 MHz (± .003%) sine-wave signal is required for this procedure.

1. Set the HP 3457A to the Frequency Function (FREQ).

2. Set the Frequency Standard for a 1 volt, 20 Hz sine-wave output signal and connect it to the HI and LO input terminals of the HP 3457A.

3. Use the Test Record to record the frequency readings at 20 Hz and 1 MHz.

4. If either of the readings are beyond the limits specified, the instrument should be calibrated. Refer to Section V of this manual for calibration procedures.

Rear Input Operational Verification Tests (Standard Instrument)

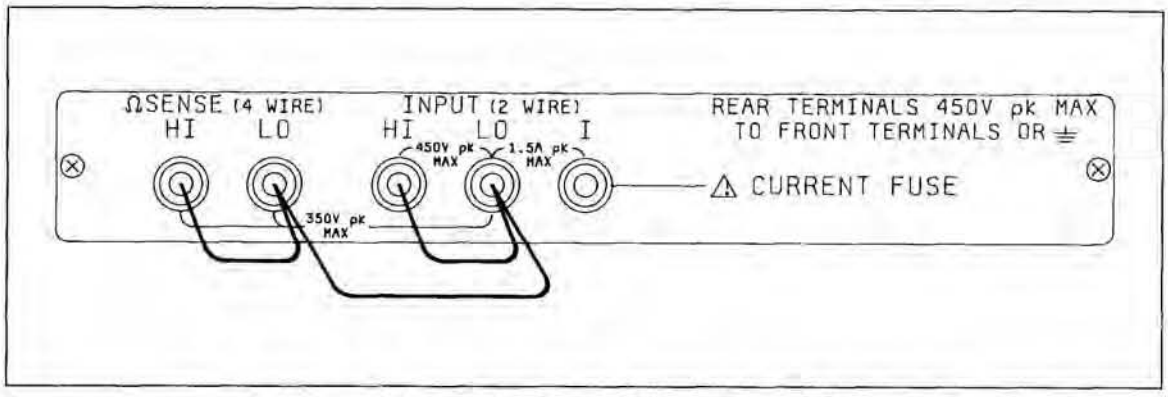

Figure 4-20. Standard Instrument Rear Input Test Connections

4-90. Preliminary Steps

1. Short the Rear Input HI and LO terminals and the Ω Sense HI and LO terminals as shown in Figure 4-9.

2. Select the Rear Terminal Input. (Press the TERM configuration key, enter the number 2 and press the ENT key.

4-91. DC Voltage Function - Rear Terminal Offset Test

4-92. Equipment Required. A low thermal short (copper wire) is required for this procedure.

1. Set the HP 3457A to the DC Voltage function (DCV) and the number of digits displayed (DIGITS DISP) to six.

2. Test the HP 3457A input offset on the 30 V, 3 V and 300 mV ranges and record the reading of each range on the Test Record provided at the end of this section. Begin with the 30 V range to allow any thermal voltages which might affect the readings on the lower ranges to dissipate.

3. If any of the offset readings are beyond the limits specified in Table 4-29 and on the Test Record, the instrument should be calibrated. Refer to Section V of this manual for calibration procedures.

3457A Input	3457A Range	3457A Set Up	90 day limits		1 year limits	
			High	Low	High	Low
Short	30 V	DCV	+ 00.00020 V	- 00.00020 V	+ 00.00020 V	- 00.00020 V
Short	3 V	DCV	+ 0.000007 V	- 0.000007 V	+ 0.000007 V	- 0.000007 V
Short	300 mV	DCV	+000.0040 mV	-000.0040 mV	+000.0040 mV	-000.0040 mV

Table 4-29. DC Voltage Offset Test Limits (Rear Terminals)

Rear Input Operational Verification Tests (Standard Instrument) Cont'd

4-93. DC Current Function - Rear Terminal Offset Test

4-94. Equipment Required. This procedure does not require any test equipment.

1. Set the HP 3457A to the DC Current function (DCI), 3 mA range, and the number of digits displayed (DIGITS DISP) to six.

2. Use the Test Record to record the current offset readings on the 3 mA and 1 A ranges.

3. If any of the offset readings are beyond the limits specified in Table 4-30 and on the Test Record, the instrument should be calibrated. Refer to Section V of this manual for calibration procedures.

3457A Input	3457A Range	3457A Set Up	90 day limits		1 year limits	
			High	Low	High	Low
Open	3 mA	DCI	+0.000104 mA	-0.000104 mA	+0.000104 mA	-0.000104 mA
Open	30 mA	DCI	+00.00104 mA	-00.00104 mA	+00.00104 mA	-00.00104 mA

Table 4-30. DC Current Offset Test Limits (Rear Terminals)

4-95. 2-Wire Ohms Function - Rear Terminal Offset Test

4-96. Equipment Required. A low thermal short (copper wire) is required for this procedure.

1. Set the HP 3457A to the 2-Wire Ohms Function, 3 Kohm range and the number of digits displayed (DIGITS DISP) to six.

2. Use the Test Record to record the offset readings for the 3 Kohm, 30 Kohm and 300 Kohm ranges.

3. If any of the offset readings are beyond the limits specified in Table 4-31 and on the Test Record, the instrument should be calibrated. Refer to Section V of this manual for calibration procedures.

3457A Input	3457A Range	3457A Set Up	90 day limits	1 year limits
Short	3 Kohm	OHM	0.000207 Kohm	0.000207 Kohm
Short	30 Kohm	OHM	00.00027 Kohm	00.00027 Kohm
Short	300 Kohm	OHM	000.0010 Kohm	000.0010 Kohm

Table 4-31. 2-Wire Ohms Offset Test Limits (Rear Terminals)

4-97. 4-Wire Ohms Function - Offset Test

4-98. Equipment Required. A low thermal short (copper wire) is required for this procedure.

1. Set the HP 3457A to the 4-Wire Ohms Function (OHMF) and the number of digits displayed (DIGITS DISP) to six.

Rear Input Operational Verification Tests (Standard Instrument) Cont'd

2. Use the Test Record to record the offset readings of the 3 Kohm, 30 Kohm and 300 Kohm ranges.

3. If any of the offset readings are beyond the limits specified in Table 4-32 and on the Test Record, the instrument should be calibrated. Refer to Section V of this manual for calibration procedures.

3457A Input	3457A Range	3457A Set Up	90 day limits	1 year limits
Short	3 Kohm	OHMF	0.000007 Kohm	0.000007 Kohm
Short	30 Kohm	OHMF	00.00007 Kohm	00.00007 Kohm
Short	300 Kohm	OHMF	000.0008 Kohm	000.0008 Kohm

Table 4-32. 4-Wire Ohms Offset Test Limits (Rear Terminals)

Rear Input Operational Verification Tests

(44491A General Purpose Relay Assy)

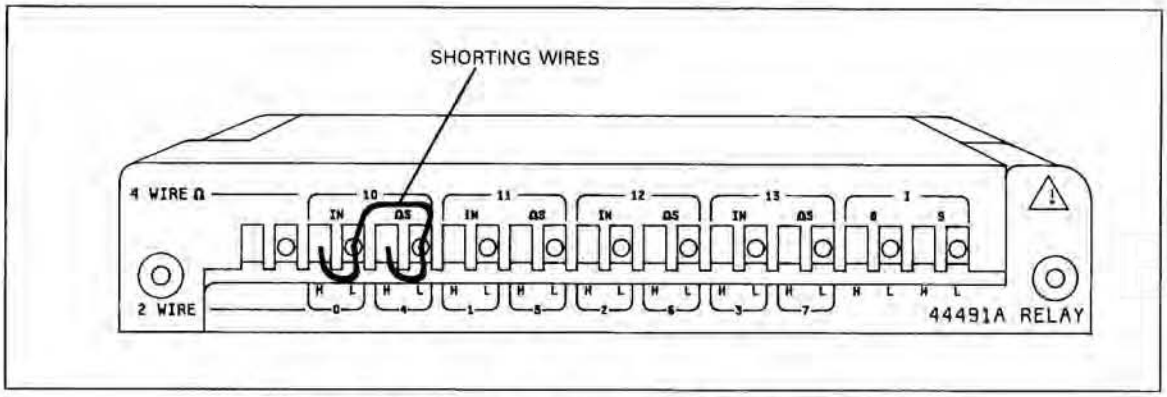

Figure 4-21. HP 44491A Terminal Block Assembly Connections

4-99. Preliminary Steps

1. Connect shorting wires to the channel 10 inputs of the Terminal Block assembly as shown in Figure 4-21.

2. Select the Scanner Input. (Press the TERM configuration key, enter the number 2 and press the ENT key).

NOTE

The 44491A Relay Assembly and the 3457A Multimeter must have been calibrated as a unit for these tests to apply. Calibration procedures are provided in Section V of this manual.

Rear Input Operational Verification Tests (44491A General Purpose Relay Assy)

4-100. DC Voltage Function - 44491A Offset Test

4-101. Equipment Required. Low thermal (copper) shorting wires are required for this procedure.

1. Set the HP 3457A to the DC Voltage function (DCV) and the number of digits displayed (DIGITS DISP) to six.

2. Close channel 0. (Press the CHAN configuration key, enter the number 0 and press the ENT key).

3. Test the HP 3457A input offset on the 30 V, 3 V and 300 mV ranges and record the reading of each range on the Test Record provided at the end of this section. Begin with the 30 V range to allow any thermal voltages which might affect the readings on the lower ranges to dissipate.

4. If any of the offset readings are beyond the limits specified in Table 4-33 and on the Test Record, the instrument should be calibrated or repaired. Refer to Section V for calibration procedures.

3457A Input	3457A Range	3457A Set Up	Test Limits High	Test Limits Low
Short	30 V	DCV	+ 00.00020 V	- 00.00020 V
Short	3 V	DCV	+ 0.000010 V	- 0.000010 V
Short	300 mV	DCV	+000.0070 mV	-000.0070 mV

Table 4-33. DC Voltage Offset Test Limits (44491A)

4-102. 2-Wire Ohms Function - 44491A Offset Test Limits

4-103. Equipment Required. Low thermal (copper) shorting wires are required for this procedure.

1. Set the HP 3457A to the 2-Wire Ohms Function, 3 Kohm range. Set the offset compensation (OFFSET COMP) on, and the number of digits displayed (DIGITS DISP) to six.

2. Close channel 0. (Press the CHAN configuration key, enter the number 0 and press the ENT key).

3. Use the Test Record to record the offset reading for the 3 Kohm range.

4. Test the ohms offset on channels 0 through 7 with the instrument set to the 3 Kohm range. Record the reading of each channel on the Test Record provided at the end of this section.

5. If any of the offset readings are beyond ± 0.002207 KOhms, the instrument should be calibrated or repaired. Refer to Section V for calibration procedures.

4-104. 4-Wire Ohms Function - 44491A Offset Test Limits

4-105. Equipment Required. Low thermal (copper) shorting wires are required for this procedure.

1. Set the HP 3457A to the 4-Wire Ohms Function (OHMF). Set the offset compensation (OFFSET COMP) on, and the number of digits displayed (DIGITS DISP) to six.

Rear Input Operational Verification Tests (44491A General Purpose Relay Assy)

2. Close channel 10. (Press the CHAN configuration key, enter the number 10 and press the ENT key).

3. Use the Test Record to record the offset reading of the 3 Kohm range.

4. If any of the offset reading is beyond ± 0.000010 KOhm, the instrument should be calibrated or repaired. Refer to Section V for calibration procedures.

4-106. DC Current Function - 44491A Offset Test Limits

4-107. Equipment Required. This procedure does not require any test equipment.

1. Set the HP 3457A to the DC Current function (DCI), 3 mA range, and the number of digits displayed (DIGITS DISP) to six.

2. Use the Test Record to record the current offset readings on the 3 mA and 1 A ranges.

3. If either of the offset readings are beyond the limits specified in Table 4-34 and on the Test Record, the instrument should be calibrated or repaired. Refer to Section V for calibration procedures.

3457A Input	3457A Range	3457A Set Up	Test Limits High	Test Limits Low
Open	3 mA	DCI	+0.000104 mA	-0.000104 mA
Open	30 mA	DCI	+00.00104 mA	-00.00104 mA

Table 4-34. DC Current Offset Test Limits (44491A)

Rear Input Operational Verification Tests (44492A 10 Channel Multiplex Assy)

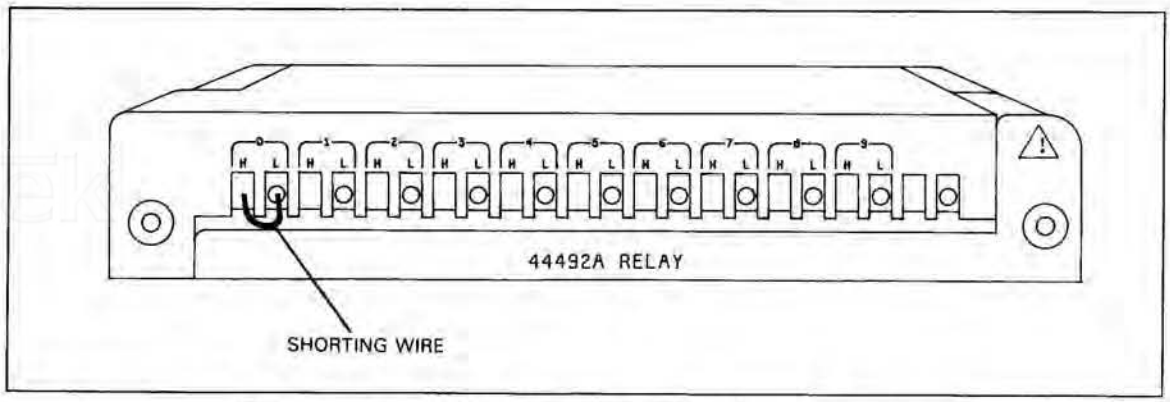

Figure 4-22. HP 44492A Terminal Block Assembly Connections

Rear Input Operational Verification Tests (44492A 10 Channel Multiplex Assy)

4-108. Preliminary Steps

1. Connect a shorting wire to the channel 0 inputs of the Terminal Block assembly as shown in Figure 4-22.

2. Select the Scanner Input. (Press the TERM configuration key, enter the number 2 and press the ENT key).

NOTE

The 44492A Multiplexer Assembly and the 3457A Multimeter must have been calibrated as a unit for these tests to apply. Calibration procedures are provided in Section V of this manual.

4-109. DC Voltage Function - 44492A Offset Test

4-110. Equipment Required. A low thermal (copper) shorting wire is required for this procedure.

1. Set the HP 3457A to the DC Voltage function (DCV) and the number of digits displayed (DIGITS DISP) to six.

2. Close channel 0. (Press the CHAN configuration key, enter the number 0 and press the ENT key).

3. Test the HP 3457A input offset on the 300 mV range and record the reading on the Test Record provided at the end of this section.

4. If the offset reading is beyond ± 000.0070 mV, the instrument should be calibrated or repaired. Refer to Section V for calibration procedures.

4-111. 2-Wire Ohms Function - 44492A Offset Test Limits

4-112. Equipment Required. A low thermal (copper) shorting wire is required for this procedure.

1. Set the HP 3457A to the 2-Wire Ohms Function, 3 Kohm range. Set the offset compensation (OFFSET COMP) on, and the number of digits displayed (DIGITS DISP) to six.

2. Close channel 0. (Press the CHAN configuration key, enter the number 0 and press the ENT key).

3. Use the Test Record to record the offset reading for the 3 Kohm range.

4. Test the ohms offset on channels 0 through 9 with the instrument set to the 3 Kohm range. Record the reading of each channel on the Test Record provided at the end of this section.

5. If any of the offset readings are beyond ± 0.004210 KOhm, the instrument should be calibrated or repaired. Refer to Section V for calibration procedures.

PERFORMANCE TEST CARD
90 DAY LIMITS

Hewlett-Packard Model 3457A
Digital Mutimeter
Serial Number _____

Test Performed by _____
Date _____
Reference Temperature _____

DC VOLTAGE TEST

Step#	Input to 3457A	Set-Up and Configuration	High Limit	Reading	Low Limit	Test Pass	Test Fail
	OFFSET TEST						
1	Short	300 V Range	+ 000.0007 V	_____	- 000.0007 V	_____	_____
2	Short	30 V Range	+ 00.00020 V	_____	- 00.00020 V	_____	_____
3	Short	3 V Range	+ 0.000007 V	_____	- 0.000007 V	_____	_____
4	Short	300 mV Range	+ 000.0040 mV	_____	- 000.0040 mV	_____	_____
5	Short	30 mV Range	+ 00.00385 mV	_____	- 00.00385 mV	_____	_____
	GAIN TEST						
6	30 mV	30 mV Range	+ 30.00505 mV	_____	+ 29.99495 mV	_____	_____
7	300 mV	300 mV Range	+ 300.0115 mV	_____	+ 299.9885 mV	_____	_____
8	3 V	3 V Range	+ 3.000058 V	_____	+ 2.999942 V	_____	_____
9	30 V	30 V Range	+ 30.00125 V	_____	+ 29.99875 V	_____	_____
10	300 V	300 V Range	+ 300.0157 V	_____	+ 299.9843 V	_____	_____
	LINEARITY TEST						
11	3 V	3 V Range	+ 3.000058 V	_____	+ 2.999942 V	_____	_____
12	2 V	3 V Range	+ 2.000041 V	_____	+ 1.999959 V	_____	_____
13	1 V	3 V Range	+ 1.000024 V	_____	+ 0.999976 V	_____	_____
14	- 1 V	3 V Range	- 0.999976 V	_____	- 1.000024 V	_____	_____
15	- 2 V	3 V Range	- 1.999959 V	_____	- 2.000041 V	_____	_____
16	- 3 V	3 V Range	- 2.999942 V	_____	- 3.000058 V	_____	_____

PERFORMANCE TEST CARD
90 DAY LIMITS

Hewlett-Packard Model 3457A
Digital Mutimeter
Serial Number_____

Test Performed by _____
Date _____
Reference Temperature_____

AC VOLTAGE TEST

Step#	Input to 3457A	Set-Up and Configuration	High Limit	Reading	Low Limit	Test Pass	Test Fail
1	Set the 3457A to the AC Voltage Function and run the AUTO-CAL 2 routine.						
	GAIN TEST						
2	30mV,1KHz	30 mVAC Range	30.05020 mV	_____	29.94980 mV	_____	_____
3	300mV,1KHz	300 mVAC Range	300.5020 mV	_____	299.4980 mV	_____	_____
4	1V,1KHz	3 VAC Range	1.002420 V	_____	0.997580 V	_____	_____
5	2V,1KHz	3 VAC Range	2.003720 V	_____	1.996280 V	_____	_____
6	3V,1KHz	3 VAC Range	3.005100 V	_____	2.994900 V	_____	_____
7	30V,1KHz	30 VAC Range	30.05020 V	_____	29.94980 V	_____	_____
8	300V,1KHz	300 VAC Range	300.6820 V	_____	299.3180 V	_____	_____
9	30V,1KHz	300 VAC Range	030.1690 V	_____	029.8310 V	_____	_____
10	3V,1KHz	30 VAC Range	03.01510 V	_____	02.98490 V	_____	_____
11	300mV,1KHz	3 VAC Range	0.301510 V	_____	0.298490 V	_____	_____
12	30mV,1KHz	300 mVAC Range	030.1510 mV	_____	029.8490 mV	_____	_____
13	Set the 3457A to AC Fast Response (ACBAND > 400)						
	FREQUENCY RESPONSE TEST						
14	30mV,1MHz	300 mVAC Range	039.6880 mV	_____	020.3120 mV	_____	_____
15	30mV,300KHz	300 mVAC Range	031.9180 mV	_____	028.0820 mV	_____	_____
16	30mV,100KHz	300 mVAC Range	030.4080 mV	_____	029.5920 mV	_____	_____
17	30mV,20KHz	300 mVAC Range	030.1510 mV	_____	029.8490 mV	_____	_____
18	30mV,6.5KHz	300 mVAC Range	030.1510 mV	_____	029.8490 mV	_____	_____
19	30mV,400Hz	300 mVAC Range	030.1510 mV	_____	029.8490 mV	_____	_____

PERFORMANCE TEST CARD
90 DAY LIMITS

Hewlett-Packard Model 3457A
Digital Mutimeter
Serial Number_____

Test Performed by _____
Date _____
Reference Temperature_____

AC VOLTAGE TEST (Cont'd)

Step#	Input to 3457A	Set-Up and Configuration	High Limit	Reading	Low Limit	Test Pass	Test Fail
	FREQUENCY RESPONSE TEST (Cont'd)						
20	300mV,1MHz	300 mVAC Range	337.1200 mV	_____	262.8800 mV	_____	_____
21	300mV,300KHz	300 mVAC Range	310.4500 mV	_____	289.5500 mV	_____	_____
22	300mV,100KHz	300 mVAC Range	302.1900 mV	_____	297.8100 mV	_____	_____
23	300mV,20KHz	300 mVAC Range	300.5320 mV	_____	299.4680 mV	_____	_____
24	300mV,6.5KHz	300 mVAC Range	300.5320 mV	_____	299.4680 mV	_____	_____
25	300mV,400Hz	300 mVAC Range	300.5320 mV	_____	299.4680 mV	_____	_____
26	300mV,1MHz	3 VAC Range	0.396880 V	_____	0.203120 V	_____	_____
27	300mV,300KHz	3 VAC Range	0.319180 V	_____	0.280820 V	_____	_____
28	300mV,100KHz	3 VAC Range	0.304080 V	_____	0.295920 V	_____	_____
29	300mV,20KHz	3 VAC Range	0.301510 V	_____	0.298490 V	_____	_____
30	300mV,6.5KHz	3 VAC Range	0.301510 V	_____	0.298490 V	_____	_____
31	300mV,400Hz	3 VAC Range	0.301510 V	_____	0.298490 V	_____	_____
32	3V,1MHz	3 VAC Range	3.371200 V	_____	2.628800 V	_____	_____
33	3V,300KHz	3 VAC Range	3.104500 V	_____	2.895500 V	_____	_____
34	3V,100KHz	3 VAC Range	3.021900 V	_____	2.978100 V	_____	_____
35	3V,20KHz	3 VAC Range	3.005320 V	_____	2.994680 V	_____	_____
36	3V,6.5KHz	3 VAC Range	3.005320 V	_____	2.994680 V	_____	_____
37	3V,400Hz	3 VAC Range	3.005320 V	_____	2.994680 V	_____	_____

PERFORMANCE TEST CARD
90 DAY LIMITS

Hewlett-Packard Model 3457A
Digital Mutimeter
Serial Number_____

Test Performed by _____
Date _____
Reference Temperature_____

AC VOLTAGE TEST (Cont'd)

Step#	Input to 3457A	Set-Up and Configuration	High Limit	Reading	Low Limit	Test Pass	Test Fail
	FREQUENCY RESPONSE TEST (Cont'd)						
37	Set the 3457A to AC Slow Response (ACBAND < 400)						
38	3V,100Hz	3 VAC Range	3.008800 V	_____	2.991200 V	_____	_____
39	3V,45Hz	3 VAC Range	3.026800 V	_____	2.973200 V	_____	_____
40	3V,20Hz	3 VAC Range	3.026800 V	_____	2.973200 V	_____	_____
41	300mV,100Hz	300 mVAC Range	300.8800 mV	_____	299.1200 mV	_____	_____
42	300mV,45Hz	300 mVAC Range	302.6800 mV	_____	297.3200 mV	_____	_____
43	300mV,20Hz	300 mVAC Range	302.6800 mV	_____	297.3200 mV	_____	_____

FREQUENCY TEST

Step#	Input to 3457A	Set-Up and Configuration	High Limit	Reading	Low Limit	Test Pass	Test Fail
1	1V,20Hz	3 VAC Range	20.01000 Hz	_____	19.99000 Hz	_____	_____
2	1V,1MHz	3 VAC Range	1.000100 MHz	_____	0.999900 MHz	_____	_____

PERFORMANCE TEST CARD
90 DAY LIMITS

Hewlett-Packard Model 3457A
Digital Mutimeter
Serial Number_____

Test Performed by _____
Date _____
Reference Temperature_____

DC CURRENT TEST

Step#	Input to 3457A	Set-Up and Configuration	High Limit	Reading	Low Limit	Test Pass	Test Fail
	OFFSET TEST						
1	Open	300 uADCI Range	+ 000.0104 uA	_____	- 000.0104 uA	_____	_____
2	Open	3 mADCI Range	+ 0.000104 mA	_____	- 0.000104 mA	_____	_____
3	Open	30 mADCI Range	+ 00.00104 mA	_____	- 00.00104 mA	_____	_____
4	Open	300 mADCI Range	+ 000.0204 mA	_____	- 000.0204 mA	_____	_____
5	Open	1 ADCI Range	+ 0.000604 A	_____	- 0.000604 A	_____	_____
	GAIN TEST						
6	300 uA	300 uADCI Range	300.0704 uA	_____	299.9296 uA	_____	_____
7	3 mA	3 mADCI Range	3.000704 mA	_____	2.999296 mA	_____	_____
8	30 mA	30 mADCI Range	30.00704 ma	_____	29.99296 mA	_____	_____
9	300 mA	300 mADCI Range	300.2304 mA	_____	299.7696 mA	_____	_____
10	1 A	1 ADCI Range	1.001304 A	_____	0.998696 A	_____	_____

AC CURRENT TEST

Step#	Input to 3457A	Set-Up and Configuration	High Limit	Reading	Low Limit	Test Pass	Test Fail
	GAIN TEST						
1	30 mA	30 mAACI Range	30.10300 mA	_____	29.89700 mA	_____	_____
2	300 mA	300 mAACI Range	301.0300 mA	_____	298.9700 mA	_____	_____
3	1 A	1 AACI Range	1.005300 A	_____	0.994700 A	_____	_____

PERFORMANCE TEST CARD
90 DAY LIMITS

Hewlett-Packard Model 3457A
Digital Mutimeter
Serial Number_____

Test Performed by _____
Date _____
Reference Temperature_____

2-WIRE OHMS TEST

Step#	Input to 3457A	Set-Up and Configuration	High Limit	Reading	Low Limit	Test Pass	Test Fail
	OFFSET TEST						
1	Short	30 Ohm Range	+ 00.20335 ohm	_____	- 00.20335 ohm	_____	_____
2	Short	300 Ohm Range	+ 000.2035 ohm	_____	- 000.2035 ohm	_____	_____
3	Short	3 KOhm Range	+ 0.000207 Kohm	_____	- 0.000207 Kohm	_____	_____
4	Short	30 KOhm Range	+ 00.00027 Kohm	_____	- 00.00027 Kohm	_____	_____
5	Short	300 KOhm Range	+ 000.0010 Kohm	_____	- 000.0010 Kohm	_____	_____
6	Short	3 MOhm Range	+ 0.000014 Mohm	_____	- 0.000014 Mohm	_____	_____
7	Short	30 MOhm Range	+ 00.00083 Mohm	_____	- 00.00083 Mohm	_____	_____
	GAIN TEST						
8	30 Ohm	30 Ohm Range	30.20530 ohm	_____	29.79470 ohm	_____	_____
9	300 Ohm	300 Ohm Range	300.2170 ohm	_____	299.7830 ohm	_____	_____
10	3 KOhm	3 KOhm Range	3.000312 Kohm	_____	2.999688 Kohm	_____	_____
11	30 KOhm	30 KOhm Range	30.00132 Kohm	_____	29.99868 Kohm	_____	_____
12	300 KOhm	300 KOhm Range	300.0130 Kohm	_____	299.9870 Kohm	_____	_____
13	3 MOhm	3 MOhm Range	3.000179 Mohm	_____	2.999821 Mohm	_____	_____
14	30 MOhm	30 MOhm Range	30.00833 Mohm	_____	29.99167 Mohm	_____	_____

PERFORMANCE TEST CARD
90 DAY LIMITS

Hewlett-Packard Model 3457A
Digital Mutimeter
Serial Number_____

Test Performed by _____
Date _____
Reference Temperature_____

4-WIRE OHMS TEST

Step#	Input to 3457A	Set-Up and Configuration	High Limit	Reading	Low Limit	Test Pass	Test Fail
	OFFSET TEST						
1	Short	30 Ohm Range	+ 00.00335 ohm	_____	- 00.00335 ohm	_____	_____
2	Short	300 Ohm Range	+ 000.0035 ohm	_____	- 000.0035 ohm	_____	_____
3	Short	3 KOhm Range	+ 0.000007 Kohm	_____	- 0.000007 Kohm	_____	_____
4	Short	30 KOhm Range	+ 00.00007 Kohm	_____	- 00.00007 Kohm	_____	_____
5	Short	300 KOhm Range	+ 000.0008 Kohm	_____	- 000.0008 Kohm	_____	_____
6	Short	3 MOhm Range	+ 0.000014 Mohm	_____	- 0.000014 Mohm	_____	_____
7	Short	30 MOhm Range	+ 00.00083 Mohm	_____	- 00.00083 Mohm	_____	_____
	GAIN TEST						
8	30 Ohm	30 Ohm Range	30.00530 ohm	_____	29.99470 ohm	_____	_____
9	300 Ohm	300 Ohm Range	300.0170 ohm	_____	299.9830 ohm	_____	_____
10	3 KOhm	3 KOhm Range	3.000112 Kohm	_____	2.999888 Kohm	_____	_____
11	30 KOhm	30 KOhm Range	30.00112 Kohm	_____	29.99888 Kohm	_____	_____
12	300 KOhm	300 KOhm Range	300.0128 Kohm	_____	299.9872 Kohm	_____	_____
13	3 MOhm	3 MOhm Range	3.000179 Mohm	_____	2.999821 Mohm	_____	_____
14	30 MOhm	30 MOhm Range	30.00833 Mohm	_____	29.99167 Mohm	_____	_____

PERFORMANCE TEST CARD
90 DAY LIMITS

Hewlett-Packard Model 3457A
Digital Mutimeter
Serial Number_____

Test Performed by _____
Date _____
Reference Temperature_____

REAR INPUT TESTS (STANDARD INSTRUMENT)

Step#	Input to 3457A	Set-Up and Configuration	High Limit	Reading	Low Limit	Test Pass	Test Fail
	DC VOLTAGE OFFSET TEST (Rear Terminals)						
1	Short	300 V Range	+ 000.0007 V	_____	- 000.0007 V	_____	_____
2	Short	30 V Range	+ 00.00020 V	_____	- 00.00020 V	_____	_____
3	Short	3 V Range	+ 0.000007 V	_____	- 0.000007 V	_____	_____
4	Short	300 mV Range	+ 000.0040 mV	_____	- 000.0040 mV	_____	_____
5	Short	30 mV Range	+ 00.00385 mV	_____	- 00.00385 mV	_____	_____
	DC CURRENT OFFSET TEST (Rear Terminals)						
6	Open	300 uADCI Range	+ 000.0104 uA	_____	- 000.0104 uA	_____	_____
7	Open	3 mADCI Range	+ 0.000104 mA	_____	- 0.000104 mA	_____	_____
8	Open	30 mADCI Range	+ 00.00104 mA	_____	- 00.00104 mA	_____	_____
9	Open	300 mADCI Range	+ 000.0204 mA	_____	- 000.0204 mA	_____	_____
10	Open	3 ADCI Range	+ 0.000604 A	_____	- 0.000604 A	_____	_____
	2-WIRE OHMS OFFSET TEST (Rear Terminals)						
11	Short	30 Ohm Range	+ 00.20335 ohm	_____	- 00.20335 ohm	_____	_____
12	Short	300 Ohm Range	+ 000.2035 ohm	_____	- 000.2035 ohm	_____	_____
13	Short	3 KOhm Range	+ 0.000207 Kohm	_____	- 0.000207 Kohm	_____	_____
14	Short	30 KOhm Range	+ 00.00027 Kohm	_____	- 00.00027 Kohm	_____	_____
15	Short	300 KOhm Range	+ 000.0010 Kohm	_____	- 000.0010 Kohm	_____	_____
16	Short	3 MOhm Range	+ 0.000014 Mohm	_____	- 0.000014 Mohm	_____	_____
17	Short	30 MOhm Range	+ 00.00083 Mohm	_____	- 00.00083 Mohm	_____	_____

PERFORMANCE TEST CARD
90 DAY LIMITS

Hewlett-Packard Model 3457A
Digital Mutimeter
Serial Number_____

Test Performed by _____
Date _____
Reference Temperature_____

REAR INPUT TESTS (STANDARD INSTRUMENT)

Step#	Input to 3457A	Set-Up and Configuration	High Limit	Reading	Low Limit	Test Pass	Test Fail
	4-WIRE OHMS OFFSET TEST (Rear Terminals)						
18	Short	30 Ohm Range	+ 00.00335 ohm	_____	- 00.00335 ohm	_____	_____
19	Short	300 Ohm Range	+ 000.0035 ohm	_____	- 000.0035 ohm	_____	_____
20	Short	3 KOhm Range	+ 0.000007 Kohm	_____	- 0.000007 Kohm	_____	_____
21	Short	30 KOhm Range	+ 00.00007 Kohm	_____	- 00.00007 Kohm	_____	_____
22	Short	300 KOhm Range	+ 000.0008 Kohm	_____	- 000.0008 Kohm	_____	_____
23	Short	3 MOhm Range	+ 0.000014 Mohm	_____	- 0.000014 Mohm	_____	_____
24	Short	30 MOhm Range	+ 00.00083 Mohm	_____	- 00.00083 Mohm	_____	_____

PERFORMANCE TEST CARD
90 DAY LIMITS

Hewlett-Packard Model 3457A
Digital Mutimeter
Serial Number_____

Test Performed by _____
Date _____
Reference Temperature_____

REAR INPUT TESTS (44491A General Purpose Relay Assy)

Step#	3457 Input	Set-Up and Configuration	High Limit	Reading	Low Limit	Test Pass	Test Fail
		DC VOLTAGE OFFSET TEST (44491A)					
1	Short	300 V Rng (Chan 0)	+ 000.0007 V	_____	- 000.0007 V	_____	_____
2	Short	30 V Rng (Chan 0)	+ 00.00020 V	_____	- 00.00020 V	_____	_____
3	Short	3 V Rng (Chan 0)	+ 0.000010 V	_____	- 0.000010 V	_____	_____
4	Short	300 mV Rng (Chan 0)	+ 000.0070 mV	_____	- 000.0070 mV	_____	_____
5	Short	30 mV Rng (Chan 0)	+ 00.00685 mV	_____	- 00.00685 mV	_____	_____
6	Short	30 mV Rng (Chan 1)	+ 00.00685 mV	_____	- 00.00685 mV	_____	_____
7	Short	30 mV Rng (Chan 2)	+ 00.00685 mV	_____	- 00.00685 mV	_____	_____
8	Short	30 mV Rng (Chan 3)	+ 00.00685 mV	_____	- 00.00685 mV	_____	_____
9	Short	30 mV Rng (Chan 4)	+ 00.00685 mV	_____	- 00.00685 mV	_____	_____
10	Short	30 mV Rng (Chan 5)	+ 00.00685 mV	_____	- 00.00685 mV	_____	_____
11	Short	30 mV Rng (Chan 6)	+ 00.00685 mV	_____	- 00.00685 mV	_____	_____
12	Short	30 mV Rng (Chan 7)	+ 00.00685 mV	_____	- 00.00685 mV	_____	_____
		2-WIRE OHMS OFFSET TEST (44491A)					
13	Short	30 MOhm Rng (Chan 0)	+ 00.00086 MOhm	_____	- 00.00086 MOhm	_____	_____
14	Short	3 MOhm Rng (Chan 0)	+ 0.000019 MOhm	_____	- 0.000019 MOhm	_____	_____
15	Short	300 KOhm Rng (Chan 0)	+ 000.0033 KOhm	_____	- 000.0033 KOhm	_____	_____
16	Short	30 KOhm Rng (Chan 0)	+ 00.00230 KOhm	_____	- 00.00230 KOhm	_____	_____
17	Short	3 KOhm Rng (Chan 0)	+ 0.002210 KOhm	_____	- 0.002210 KOhm	_____	_____
18	Short	300 Ohm Rng (Chan 0)	+ 002.2065 Ohm	_____	- 002.2065 Ohm	_____	_____
19	Short	30 Ohm Rng (Chan 0)	+ 02.20635 Ohm	_____	- 02.20635 Ohm	_____	_____

PERFORMANCE TEST CARD
90 DAY LIMITS

Hewlett-Packard Model 3457A
Digital Mutimeter
Serial Number_____

Test Performed by _____
Date _____
Reference Temperature_____

REAR INPUT TESTS (44491A General Purpose Relay Assy)

Step#	3457 Input	Set-Up and Configuration	High Limit	Reading	Low Limit	Test Pass	Test Fail
20	Short	30 Ohm Rng (Chan 1)	+ 02.20635 Ohm	_____	- 02.20635 Ohm	_____	_____
21	Short	30 Ohm Rng (Chan 2)	+ 02.20635 Ohm	_____	- 02.20635 Ohm	_____	_____
22	Short	30 Ohm Rng (Chan 3)	+ 02.20635 Ohm	_____	- 02.20635 Ohm	_____	_____
23	Short	30 Ohm Rng (Chan 4)	+ 02.20635 Ohm	_____	- 02.20635 Ohm	_____	_____
24	Short	30 Ohm Rng (Chan 5)	+ 02.20635 Ohm	_____	- 02.20635 Ohm	_____	_____
25	Short	30 Ohm Rng (Chan 6)	+ 02.20635 Ohm	_____	- 02.20635 Ohm	_____	_____
26	Short	30 Ohm Rng (Chan 7)	+ 02.20635 Ohm	_____	- 02.20635 Ohm	_____	_____
	4-WIRE OHMS OFFSET TEST (44491A)						
27	Short	30 Ohm Rng (Chan 10)	+ 00.00635 Ohm	_____	- 00.00635 Ohm	_____	_____
28	Short	300 Ohm Rng (Chan 10)	+ 000.0065 Ohm	_____	- 000.0065 Ohm	_____	_____
29	Short	3 KOhm Rng (Chan 10)	+ 0.000010 KOhm	_____	- 0.000010 KOhm	_____	_____
30	Short	30 KOhm Rng (Chan 10)	+ 00.00010 KOhm	_____	- 00.00010 KOhm	_____	_____
31	Short	300 KOhm Rng (Chan 10)	+ 000.0011 KOhm	_____	- 000.0011 KOhm	_____	_____
32	Short	3 MOhm Rng (Chan 10)	+ 0.000017 MOhm	_____	- 0.000017 MOhm	_____	_____
33	Short	30 MOhm Rng (Chan 10)	+ 00.00086 MOhm	_____	- 00.00086 MOhm	_____	_____
	DC CURRENT OFFSET TEST (44491A)						
34	Open	300 uA Range	+ 000.0104 uA	_____	- 000.0104 uA	_____	_____
35	Open	3 mA Range	+ 0.000104 mA	_____	- 0.000104 mA	_____	_____
36	Open	30 mA Range	+ 00.00104 mA	_____	- 00.00104 mA	_____	_____
37	Open	300 mA Range	+ 000.0204 mA	_____	- 000.0204 mA	_____	_____
38	Open	3 A Range	+ 0.000604 A	_____	- 0.000604 A	_____	_____

PERFORMANCE TEST CARD
90 DAY LIMITS

Hewlett-Packard Model 3457A
Digital Mutimeter
Serial Number_____

Test Performed by _____
Date _____
Reference Temperature_____

REAR INPUT TESTS (44492A 10 Channel Multiplex Assy)

Step#	3457 Input	Set-Up and Configuration	High Limit	Reading	Low Limit	Test Pass	Test Fail
		DC VOLTAGE OFFSET TEST (44492A)					
1	Short	300 V Rng (Chan 0)	+ 000.0007 V	_____	- 000.0007 V	_____	_____
2	Short	30 V Rng (Chan 0)	+ 00.00020 V	_____	- 00.00020 V	_____	_____
3	Short	3 V Rng (Chan 0)	+ 0.000010 V	_____	- 0.000010 V	_____	_____
4	Short	300 mV Rng (Chan 0)	+ 000.0070 mV	_____	- 000.0070 mV	_____	_____
5	Short	300 mV Rng (Chan 1)	+ 000.0070 mV	_____	- 000.0070 mV	_____	_____
6	Short	300 mV Rng (Chan 2)	+ 000.0070 mV	_____	- 000.0070 mV	_____	_____
7	Short	300 mV Rng (Chan 3)	+ 000.0070 mV	_____	- 000.0070 mV	_____	_____
8	Short	300 mV Rng (Chan 4)	+ 000.0070 mV	_____	- 000.0070 mV	_____	_____
9	Short	300 mV Rng (Chan 5)	+ 000.0070 mV	_____	- 000.0070 mV	_____	_____
10	Short	300 mV Rng (Chan 6)	+ 000.0070 mV	_____	- 000.0070 mV	_____	_____
11	Short	300 mV Rng (Chan 7)	+ 000.0070 mV	_____	- 000.0070 mV	_____	_____
12	Short	300 mV Rng (Chan 8)	+ 000.0070 mV	_____	- 000.0070 mV	_____	_____
13	Short	300 mV Rng (Chan 9)	+ 000.0070 mV	_____	- 000.0070 mV	_____	_____
		2-WIRE OHMS OFFSET TEST (44492A)					
14	Short	30 MOhm Rng (Chan 0)	+ 00.00086 KOhm	_____	- 00.00086 KOhm	_____	_____
15	Short	3 MOhm Rng (Chan 0)	+ 0.000021 MOhm	_____	- 0.000021 MOhm	_____	_____
16	Short	300 KOhm Rng (Chan 0)	+ 000.0033 KOhm	_____	- 000.0033 KOhm	_____	_____
17	Short	30 KOhm Rng (Chan 0)	+ 00.00230 KOhm	_____	- 00.00230 KOhm	_____	_____
18	Short	3 KOhm Rng (Chan 0)	+ 0.002210 KOhm	_____	- 0.002210 KOhm	_____	_____
19	Short	300 Ohm Rng (Chan 0)	+ 004.2065 Ohm	_____	- 004.2065 Ohm	_____	_____
20	Short	300 Ohm Rng (Chan 1)	+ 004.2065 Ohm	_____	- 004.2065 Ohm	_____	_____

PERFORMANCE TEST CARD
90 DAY LIMITS

Hewlett-Packard Model 3457A
Digital Mutimeter
Serial Number_____

Test Performed by _____
Date _____
Reference Temperature_____

REAR INPUT TESTS (44492A 10 Channel Multiplex Assy)

Step#	3457 Input	Set-Up and Configuration	High Limit	Reading	Low Limit	Test Pass	Test Fail
	2-WIRE OHMS OFFSET TEST (44492A) CONT'D						
21	Short	300 Ohm Rng (Chan 2)	+ 004.2065 Ohm	_____	- 004.2065 Ohm	_____	_____
22	Short	300 Ohm Rng (Chan 3)	+ 004.2065 Ohm	_____	- 004.2065 Ohm	_____	_____
23	Short	300 Ohm Rng (Chan 4)	+ 004.2065 Ohm	_____	- 004.2065 Ohm	_____	_____
24	Short	300 Ohm Rng (Chan 5)	+ 004.2065 Ohm	_____	- 004.2065 Ohm	_____	_____
25	Short	300 Ohm Rng (Chan 6)	+ 004.2065 Ohm	_____	- 004.2065 Ohm	_____	_____
26	Short	300 Ohm Rng (Chan 7)	+ 004.2065 Ohm	_____	- 004.2065 Ohm	_____	_____
27	Short	300 Ohm Rng (Chan 8)	+ 004.2065 Ohm	_____	- 004.2065 Ohm	_____	_____
28	Short	300 Ohm Rng (Chan 9)	+ 004.2065 Ohm	_____	- 004.2065 Ohm	_____	_____

PERFORMANCE TEST CARD
1 YEAR LIMITS

Hewlett-Packard Model 3457A
Digital Mutimeter
Serial Number_____

Test Performed by _____
Date _____
Reference Temperature_____

DC VOLTAGE TEST

Step#	Input to 3457A	Set-Up and Configuration	High Limit	Reading	Low Limit	Test Pass	Test Fail
	OFFSET TEST						
1	Short	300 V Range	+ 000.0007 V	_____	- 000.0007 V	_____	_____
2	Short	30 V Range	+ 00.00020 V	_____	- 00.00020 V	_____	_____
3	Short	3 V Range	+ 0.000007 V	_____	- 0.000007 V	_____	_____
4	Short	300 mV Range	+ 000.0040 mV	_____	- 000.0040 mV	_____	_____
5	Short	30 mV Range	+ 00.00385 mV	_____	- 00.00385 mV	_____	_____
	GAIN TEST						
6	30 mV	30 mV Range	+ 30.00520 mV	_____	+ 29.99480 mV	_____	_____
7	300 mV	300 mV Range	+ 300.0145 mV	_____	+ 299.9855 mV	_____	_____
8	3 V	3 V Range	+ 3.000082 V	_____	+ 2.999918 V	_____	_____
9	30 V	30 V Range	+ 30.00140 V	_____	+ 29.99860 V	_____	_____
10	300 V	300 V Range	+ 300.0172 V	_____	+ 299.9828 V	_____	_____
	LINEARITY TEST						
11	3 V	3 V Range	+ 3.000082 V	_____	+ 2.999918 V	_____	_____
12	2 V	3 V Range	+ 2.000057 V	_____	+ 1.999943 V	_____	_____
13	1 V	3 V Range	+ 1.000032 V	_____	+ 0.999968 V	_____	_____
14	- 1 V	3 V Range	- 0.999968 V	_____	- 1.000032 V	_____	_____
15	- 2 V	3 V Range	- 1.999943 V	_____	- 2.000057 V	_____	_____
16	- 3 V	3 V Range	- 2.999918 V	_____	- 3.000082 V	_____	_____

PERFORMANCE TEST CARD
1 YEAR LIMITS

Hewlett-Packard Model 3457A
Digital Mutimeter
Serial Number_____

Test Performed by _____
Date _____
Reference Temperature_____

AC VOLTAGE TEST

Step#	Input to 3457A	Set-Up and Configuration	High Limit	Reading	Low Limit	Test Pass	Test Fail
1	Set the 3457A to the AC Voltage Function and run the AUTO-CAL 2 routine.						
	GAIN TEST						
2	30mV,1KHz	30 mVAC Range	30.06420 mV	_____	29.93580 mV	_____	_____
3	300mV,1KHz	300 mVAC Range	300.6420 mV	_____	299.3580 mV	_____	_____
4	1V,1KHz	3 VAC Range	1.003020 V	_____	0.996980 V	_____	_____
5	2V,1KHz	3 VAC Range	2.004720 V	_____	1.995280 V	_____	_____
6	3V,1KHz	3 VAC Range	3.006420 V	_____	2.993580 V	_____	_____
7	30V,1KHz	30 VAC Range	30.06420 V	_____	29.93580 V	_____	_____
8	300V,1KHz	300 VAC Range	300.8220 V	_____	299.1780 V	_____	_____
9	30V,1KHz	300 VAC Range	30.2010 V	_____	29.7990 V	_____	_____
10	3V,1KHz	30 VAC Range	3.01830 V	_____	2.98170 V	_____	_____
11	300mV,1KHz	3 VAC Range	.301830 V	_____	.298170 V	_____	_____
12	30mV,1KHz	300 mVAC Range	30.1830 mV	_____	29.8170 mV	_____	_____
13	Set the 3457A to AC Fast Response (ACBAND > 400)						
	FREQUENCY RESPONSE TEST						
14	30mV,1MHz	300 mVAC Range	039.7200 mV	_____	020.2800 mV	_____	_____
15	30mV,300KHz	300 mVAC Range	031.9500 mV	_____	028.0500 mV	_____	_____
16	30mV,100KHz	300 mVAC Range	030.4400 mV	_____	029.5600 mV	_____	_____
17	30mV,20KHz	300 mVAC Range	030.1830 mV	_____	029.8170 mV	_____	_____
18	30mV,6.5KHz	300 mVAC Range	030.1830 mV	_____	029.8170 mV	_____	_____
19	30mV,400Hz	300 mVAC Range	030.1830 mV	_____	029.8170 mV	_____	_____

PERFORMANCE TEST CARD
1 YEAR LIMITS

Hewlett-Packard Model 3457A
Digital Mutimeter
Serial Number_____

Test Performed by _____
Date _____
Reference Temperature_____

AC VOLTAGE TEST (Cont'd)

Step#	Input to 3457A	Set-Up and Configuration	High Limit	Reading	Low Limit	Test Pass	Test Fail
	FREQUENCY RESPONSE TEST (Cont'd)						
20	300mV,1MHz	300 mVAC Range	337.2600 mV	_____	262.7400 mV	_____	_____
21	300mV,300KHz	300 mVAC Range	310.5900 mV	_____	289.4100 mV	_____	_____
22	300mV,100KHz	300 mVAC Range	302.3300 mV	_____	297.6700 mV	_____	_____
23	300mV,20KHz	300 mVAC Range	300.6420 mV	_____	299.3580 mV	_____	_____
24	300mV,6.5KHz	300 mVAC Range	300.6420 mV	_____	299.3580 mV	_____	_____
25	300mV,400Hz	300 mVAC Range	300.6420 mV	_____	299.3580 mV	_____	_____
26	300mV,1MHz	3 VAC Range	0.397200 V	_____	0.202800 V	_____	_____
27	300mV,300KHz	3 VAC Range	0.319500 V	_____	0.280500 V	_____	_____
28	300mV,100KHz	3 VAC Range	0.304400 V	_____	0.295600 V	_____	_____
29	300mV,20KHz	3 VAC Range	0.301830 V	_____	0.298170 V	_____	_____
30	300mV,6.5KHz	3 VAC Range	0.301830 V	_____	0.298170 V	_____	_____
31	300mV,400Hz	3 VAC Range	0.301830 V	_____	0.298170 V	_____	_____
32	3V,1MHz	3 VAC Range	3.372600 V	_____	2.627400 V	_____	_____
33	3V,300KHz	3 VAC Range	3.105900 V	_____	2.894100 V	_____	_____
34	3V,100KHz	3 VAC Range	3.023300 V	_____	2.976700 V	_____	_____
35	3V,20KHz	3 VAC Range	3.006420 V	_____	2.993580 V	_____	_____
36	3V,6.5KHz	3 VAC Range	3.006420 V	_____	2.993580 V	_____	_____
37	3V,400Hz	3 VAC Range	3.006420 V	_____	2.993580 V	_____	_____

PERFORMANCE TEST CARD
1 YEAR LIMITS

Hewlett-Packard Model 3457A
Digital Mutimeter
Serial Number_____

Test Performed by _____
Date _____
Reference Temperature_____

AC VOLTAGE TEST (Cont'd)

Step#	Input to 3457A	Set-Up and Configuration	High Limit	Reading	Low Limit	Test Pass	Test Fail
	FREQUENCY RESPONSE TEST (Cont'd)						
38	Set the 3457A to AC Slow Response (ACBAND < 400)						
39	3V,100Hz	3 VAC Range	3.008820 V	_____	2.991180 V	_____	_____
40	3V,45Hz	3 VAC Range	3.019320 V	_____	2.980680 V	_____	_____
41	3V,20Hz	3 VAC Range	3.019320 V	_____	2.980680 V	_____	_____
42	300mV,100Hz	300 mVAC Range	300.8820 mV	_____	299.1180 mV	_____	_____
43	300mV,45Hz	300 mVAC Range	301.9320 mV	_____	298.0680 mV	_____	_____
44	300mV,20Hz	300 mVAC Range	301.9320 mV	_____	298.0680 mV	_____	_____

FREQUENCY TEST

Step#	Input to 3457A	Set-Up and Configuration	High Limit	Reading	Low Limit	Test Pass	Test Fail
1	1V,20Hz	3 VAC Range	20.01000 Hz	_____	19.99000 Hz	_____	_____
2	1V,1MHz	3 VAC Range	1.000100 MHz	_____	0.999900 MHz	_____	_____

PERFORMANCE TEST CARD
1 YEAR LIMITS

Hewlett-Packard Model 3457A
Digital Mutimeter
Serial Number_____

Test Performed by _____
Date _____
Reference Temperature_____

DC CURRENT TEST

Step#	Input to 3457A	Set-Up and Configuration	High Limit	Reading	Low Limit	Test Pass	Test Fail
	OFFSET TEST						
1	Open	300 uADCI Range	+ 000.0104 uA	_____	- 000.0104 uA	_____	_____
2	Open	3 mADCI Range	+ 0.000104 mA	_____	- 0.000104 mA	_____	_____
3	Open	30 mADCI Range	+ 00.00104 mA	_____	- 00.00104 mA	_____	_____
4	Open	300 mADCI Range	+ 000.0204 mA	_____	- 000.0204 mA	_____	_____
5	Open	1 ADCI Range	+ 0.000604 A	_____	- 0.000604 A	_____	_____
	GAIN TEST						
6	300 uA	300 uADCI Range	300.1304 uA	_____	299.8696 uA	_____	_____
7	3 mA	3 mADCI Range	3.001304 mA	_____	2.998696 mA	_____	_____
8	30 mA	30 mADCI Range	30.01304 ma	_____	29.98696 mA	_____	_____
9	300 mA	300 mADCI Range	300.2604 mA	_____	299.7396 mA	_____	_____
10	1 A	1 ADCI Range	1.001304 A	_____	0.998696 A	_____	_____

AC CURRENT TEST

Step#	Input to 3457A	Set-Up and Configuration	High Limit	Reading	Low Limit	Test Pass	Test Fail
	GAIN TEST						
1	30 mA	30 mAACI Range	30.12700 mA	_____	29.87300 mA	_____	_____
2	300 mA	300 mAACI Range	301.2700 mA	_____	298.7300 mA	_____	_____
3	1 A	1 AACI Range	1.007100 A	_____	0.992900 A	_____	_____

PERFORMANCE TEST CARD
1 YEAR LIMITS

Hewlett-Packard Model 3457A
Digital Mutimeter
Serial Number_____

Test Performed by _____
Date _____
Reference Temperature_____

2-WIRE OHMS TEST

Step#	Input to 3457A	Set-Up and Configuration	High Limit	Reading	Low Limit	Test Pass	Test Fail
	OFFSET TEST						
1	Short	30 Ohm Range	+ 00.20335 ohm	_____	- 00.20335 ohm	_____	_____
2	Short	300 Ohm Range	+ 000.2035 ohm	_____	- 000.2035 ohm	_____	_____
3	Short	3 KOhm Range	+ 0.000207 Kohm	_____	- 0.000207 Kohm	_____	_____
4	Short	30 KOhm Range	+ 00.00027 Kohm	_____	- 00.00027 Kohm	_____	_____
5	Short	300 KOhm Range	+ 000.0010 Kohm	_____	- 000.0010 Kohm	_____	_____
6	Short	3 MOhm Range	+ 0.000014 Mohm	_____	- 0.000014 Mohm	_____	_____
7	Short	30 MOhm Range	+ 00.00083 Mohm	_____	- 00.00083 Mohm	_____	_____
	GAIN TEST						
8	30 Ohm	30 Ohm Range	30.20560 ohm	_____	29.79440 ohm	_____	_____
9	300 Ohm	300 Ohm Range	300.2200 ohm	_____	299.7800 ohm	_____	_____
10	3 KOhm	3 KOhm Range	3.000357 Kohm	_____	2.999643 Kohm	_____	_____
11	30 KOhm	30 KOhm Range	30.00177 Kohm	_____	29.99823 Kohm	_____	_____
12	300 KOhm	300 KOhm Range	300.0160 Kohm	_____	299.9840 Kohm	_____	_____
13	3 MOhm	3 MOhm Range	3.000209 Mohm	_____	2.999791 Mohm	_____	_____
14	30 MOhm	30 MOhm Range	30.01283 Mohm	_____	29.98717 Mohm	_____	_____

PERFORMANCE TEST CARD
1 YEAR LIMITS

Hewlett-Packard Model 3457A
Digital Mutimeter
Serial Number_____

Test Performed by _____
Date _____
Reference Temperature_____

4-WIRE OHMS TEST

Step#	Input to 3457A	Set-Up and Configuration	High Limit	Reading	Low Limit	Test Pass	Test Fail
	OFFSET TEST						
1	Short	30 Ohm Range	+ 00.00335 ohm	_____	- 00.00335 ohm	_____	_____
2	Short	300 Ohm Range	+ 000.0035 ohm	_____	- 000.0035 ohm	_____	_____
3	Short	3 KOhm Range	+ 0.000007 Kohm	_____	- 0.000007 Kohm	_____	_____
4	Short	30 KOhm Range	+ 00.00007 Kohm	_____	- 00.00007 Kohm	_____	_____
5	Short	300 KOhm Range	+ 000.0008 Kohm	_____	- 000.0008 Kohm	_____	_____
6	Short	3 MOhm Range	+ 0.000014 Mohm	_____	- 0.000014 Mohm	_____	_____
7	Short	30 MOhm Range	+ 00.00083 Mohm	_____	- 00.00083 Mohm	_____	_____
	GAIN TEST						
8	30 Ohm	30 Ohm Range	30.00560 ohm	_____	29.99440 ohm	_____	_____
9	300 Ohm	300 Ohm Range	300.0200 ohm	_____	299.9800 ohm	_____	_____
10	3 KOhm	3 KOhm Range	3.000157 Kohm	_____	2.999843 Kohm	_____	_____
11	30 KOhm	30 KOhm Range	30.00157 Kohm	_____	29.99843 Kohm	_____	_____
12	300 KOhm	300 KOhm Range	300.0158 Kohm	_____	299.9842 Kohm	_____	_____
13	3 MOhm	3 MOhm Range	3.000209 Mohm	_____	2.999791 Mohm	_____	_____
14	30 MOhm	30 MOhm Range	30.01283 Mohm	_____	29.98717 Mohm	_____	_____

PERFORMANCE TEST CARD
1 YEAR LIMITS

Hewlett-Packard Model 3457A
Digital Mutimeter
Serial Number_____

Test Performed by _____
Date _____
Reference Temperature_____

REAR INPUT TESTS (STANDARD INSTRUMENT)

Step#	Input to 3457A	Set-Up and Configuration	High Limit	Reading	Low Limit	Test Pass	Test Fail
	DC VOLTAGE OFFSET TEST (Rear Terminals)						
1	Short	300 V Range	+ 000.0007 V	_____	- 000.0007 V	_____	_____
2	Short	30 V Range	+ 00.00020 V	_____	- 00.00020 V	_____	_____
3	Short	3 V Range	+ 0.000007 V	_____	- 0.000007 V	_____	_____
4	Short	300 mV Range	+ 000.0040 mV	_____	- 000.0040 mV	_____	_____
5	Short	30 mV Range	+ 00.00385 mV	_____	- 00.00385 mV	_____	_____
	DC CURRENT OFFSET TEST (Rear Terminals)						
6	Open	300 uADCI Range	+ 000.0104 uA	_____	- 000.0104 uA	_____	_____
7	Open	3 mADCI Range	+ 0.000104 mA	_____	- 0.000104 mA	_____	_____
8	Open	30 mADCI Range	+ 00.00104 mA	_____	- 00.00104 mA	_____	_____
9	Open	300 mADCI Range	+ 000.0204 mA	_____	- 000.0204 mA	_____	_____
10	Open	1 ADCI Range	+ 0.000604 A	_____	- 0.000604 A	_____	_____
	2-WIRE OHMS OFFSET TEST (Rear Terminals)						
11	Short	30 Ohm Range	+ 00.20335 ohm	_____	- 00.20335 ohm	_____	_____
12	Short	300 Ohm Range	+ 000.2035 ohm	_____	- 000.2035 ohm	_____	_____
13	Short	3 KOhm Range	+ 0.000207 Kohm	_____	- 0.000207 Kohm	_____	_____
14	Short	30 KOhm Range	+ 00.00027 Kohm	_____	- 00.00027 Kohm	_____	_____
15	Short	300 KOhm Range	+ 000.0010 Kohm	_____	- 000.0010 Kohm	_____	_____
16	Short	3 MOhm Range	+ 0.000014 Mohm	_____	- 0.000014 Mohm	_____	_____
17	Short	30 MOhm Range	+ 00.00083 Mohm	_____	- 00.00083 Mohm	_____	_____

PERFORMANCE TEST CARD
1 YEAR LIMITS

Hewlett-Packard Model 3457A
Digital Mutimeter
Serial Number_____

Test Performed by _____
Date _____
Reference Temperature_____

REAR INPUT TESTS (STANDARD INSTRUMENT)

Step#	Input to 3457A	Set-Up and Configuration	High Limit	Reading	Low Limit	Test Pass	Test Fail
	4-WIRE OHMS OFFSET TEST (Rear Terminals)						
18	Short	30 Ohm Range	+ 00.00335 ohm	_____	- 00.00335 ohm	_____	_____
19	Short	300 Ohm Range	+ 000.0035 ohm	_____	- 000.0035 ohm	_____	_____
20	Short	3 KOhm Range	+ 0.000007 Kohm	_____	- 0.000007 Kohm	_____	_____
21	Short	30 KOhm Range	+ 00.00007 Kohm	_____	- 00.00007 Kohm	_____	_____
22	Short	300 KOhm Range	+ 000.0008 Kohm	_____	- 000.0008 Kohm	_____	_____
23	Short	3 MOhm Range	+ 0.000014 Mohm	_____	- 0.000014 Mohm	_____	_____
24	Short	30 MOhm Range	+ 00.00083 Mohm	_____	- 00.00083 Mohm	_____	_____

PERFORMANCE TEST CARD
1 YEAR LIMITS

Hewlett-Packard Model 3457A
Digital Mutimeter
Serial Number_____

Test Performed by _____
Date _____
Reference Temperature_____

REAR INPUT TESTS (44491A General Purpose Relay Assy)

Step#	3457 Input	Set-Up and Configuration	High Limit	Reading	Low Limit	Test Pass	Test Fail
		DC VOLTAGE OFFSET TEST (44491A)					
1	Short	300 V Rng (Chan 0)	+ 000.0007 V		- 000.0007 V		
2	Short	30 V Rng (Chan 0)	+ 00.00020 V		- 00.00020 V		
3	Short	3 V Rng (Chan 0)	+ 0.000010 V		- 0.000010 V		
4	Short	300 mV Rng (Chan 0)	+ 000.0070 mV		- 000.0070 mV		
5	Short	30 mV Rng (Chan 0)	+ 00.00685 mV		- 00.00685 mV		
6	Short	30 mV Rng (Chan 1)	+ 00.00685 mV		- 00.00685 mV		
7	Short	30 mV Rng (Chan 2)	+ 00.00685 mV		- 00.00685 mV		
8	Short	30 mV Rng (Chan 3)	+ 00.00685 mV		- 00.00685 mV		
9	Short	30 mV Rng (Chan 4)	+ 00.00685 mV		- 00.00685 mV		
10	Short	30 mV Rng (Chan 5)	+ 00.00685 mV		- 00.00685 mV		
11	Short	30 mV Rng (Chan 6)	+ 00.00685 mV		- 00.00685 mV		
12	Short	30 mV Rng (Chan 7)	+ 00.00685 mV		- 00.00685 mV		
		2-WIRE OHMS OFFSET TEST (44491A)					
13	Short	30 MOhm Rng (Chan 0)	+ 00.00086 MOhm		- 00.00086 MOhm		
14	Short	3 MOhm Rng (Chan 0)	+ 0.000019 MOhm		- 0.000019 MOhm		
15	Short	300 KOhm Rng (Chan 0)	+ 000.0033 KOhm		- 000.0033 KOhm		
16	Short	30 KOhm Rng (Chan 0)	+ 00.00230 KOhm		- 00.00230 KOhm		
17	Short	3 KOhm Rng (Chan 0)	+ 0.002210 KOhm		- 0.002210 KOhm		
18	Short	300 Ohm Rng (Chan 0)	+ 002.2065 Ohm		- 002.2065 Ohm		
19	Short	30 Ohm Rng (Chan 0)	+ 02.20635 Ohm		- 02.20635 Ohm		

PERFORMANCE TEST CARD
1 YEAR LIMITS

Hewlett-Packard Model 3457A
Digital Mutimeter
Serial Number_____

Test Performed by _____
Date _____
Reference Temperature_____

REAR INPUT TESTS (44491A General Purpose Relay Assy)

Step#	3457 Input	Set-Up and Configuration	High Limit	Reading	Low Limit	Test Pass	Test Fail
20	Short	30 Ohm Rng (Chan 1)	+ 02.20635 Ohm	_____	- 02.20635 Ohm	_____	_____
21	Short	30 Ohm Rng (Chan 2)	+ 02.20635 Ohm	_____	- 02.20635 Ohm	_____	_____
22	Short	30 Ohm Rng (Chan 3)	+ 02.20635 Ohm	_____	- 02.20635 Ohm	_____	_____
23	Short	30 Ohm Rng (Chan 4)	+ 02.20635 Ohm	_____	- 02.20635 Ohm	_____	_____
24	Short	30 Ohm Rng (Chan 5)	+ 02.20635 Ohm	_____	- 02.20635 Ohm	_____	_____
25	Short	30 Ohm Rng (Chan 6)	+ 02.20635 Ohm	_____	- 02.20635 Ohm	_____	_____
26	Short	30 Ohm Rng (Chan 7)	+ 02.20635 Ohm	_____	- 02.20635 Ohm	_____	_____
	4-WIRE OHMS OFFSET TEST (44491A)						
27	Short	30 Ohm Rng (Chan 10)	+ 00.00635 Ohm	_____	- 00.00635 Ohm	_____	_____
28	Short	300 Ohm Rng (Chan 10)	+ 000.0065 Ohm	_____	- 000.0065 Ohm	_____	_____
29	Short	3 KOhm Rng (Chan 10)	+ 0.000010 KOhm	_____	- 0.000010 KOhm	_____	_____
30	Short	30 KOhm Rng (Chan 10)	+ 00.00010 KOhm	_____	- 00.00010 KOhm	_____	_____
31	Short	300 KOhm Rng (Chan 10)	+ 000.0011 KOhm	_____	- 000.0011 KOhm	_____	_____
32	Short	3 MOhm Rng (Chan 10)	+ 0.000017 MOhm	_____	- 0.000017 MOhm	_____	_____
33	Short	30 MOhm Rng (Chan 10)	+ 00.00086 MOhm	_____	- 00.00086 MOhm	_____	_____
	DC CURRENT OFFSET TEST (44491A)						
34	Open	300 uA Range	+ 000.0104 uA	_____	- 000.0104 uA	_____	_____
35	Open	3 mA Range	+ 0.000104 mA	_____	- 0.000104 mA	_____	_____
36	Open	30 mA Range	+ 00.00104 mA	_____	- 00.00104 mA	_____	_____
37	Open	300 mA Range	+ 000.0204 mA	_____	- 000.0204 mA	_____	_____
38	Open	3 A Range	+ 0.000604 A	_____	- 0.000604 A	_____	_____

PERFORMANCE TEST CARD
1 YEAR LIMITS

Hewlett-Packard Model 3457A
Digital Mutimeter
Serial Number_____

Test Performed by _____
Date _____
Reference Temperature_____

REAR INPUT TESTS (44492A 10 Channel Multiplex Assy)

Step#	3457 Input	Set-Up and Configuration	High Limit	Reading	Low Limit	Test Pass	Test Fail
		DC VOLTAGE OFFSET TEST (44492A)					
1	Short	300 V Rng (Chan 0)	+ 000.0007 V	_____	- 000.0007 V	_____	_____
2	Short	30 V Rng (Chan 0)	+ 00.00020 V	_____	- 00.00020 V	_____	_____
3	Short	3 V Rng (Chan 0)	+ 0.000010 V	_____	- 0.000010 V	_____	_____
4	Short	300 mV Rng (Chan 0)	+ 000.0070 mV	_____	- 000.0070 mV	_____	_____
5	Short	300 mV Rng (Chan 1)	+ 000.0070 mV	_____	- 000.0070 mV	_____	_____
6	Short	300 mV Rng (Chan 2)	+ 000.0070 mV	_____	- 000.0070 mV	_____	_____
7	Short	300 mV Rng (Chan 3)	+ 000.0070 mV	_____	- 000.0070 mV	_____	_____
8	Short	300 mV Rng (Chan 4)	+ 000.0070 mV	_____	- 000.0070 mV	_____	_____
9	Short	300 mV Rng (Chan 5)	+ 000.0070 mV	_____	- 000.0070 mV	_____	_____
10	Short	300 mV Rng (Chan 6)	+ 000.0070 mV	_____	- 000.0070 mV	_____	_____
11	Short	300 mV Rng (Chan 7)	+ 000.0070 mV	_____	- 000.0070 mV	_____	_____
12	Short	300 mV Rng (Chan 8)	+ 000.0070 mV	_____	- 000.0070 mV	_____	_____
13	Short	300 mV Rng (Chan 9)	+ 000.0070 mV	_____	- 000.0070 mV	_____	_____
		2-WIRE OHMS OFFSET TEST (44492A)					
14	Short	30 MOhm Rng (Chan 0)	+ 00.00086 KOhm	_____	- 00.00086 KOhm	_____	_____
15	Short	3 MOhm Rng (Chan 0)	+ 0.000021 MOhm	_____	- 0.000021 MOhm	_____	_____
16	Short	300 KOhm Rng (Chan 0)	+ 000.0033 KOhm	_____	- 000.0033 KOhm	_____	_____
17	Short	30 KOhm Rng (Chan 0)	+ 00.00230 KOhm	_____	- 00.00230 KOhm	_____	_____
18	Short	3 KOhm Rng (Chan 0)	+ 0.002210 KOhm	_____	- 0.002210 KOhm	_____	_____
19	Short	300 Ohm Rng (Chan 0)	+ 004.2065 Ohm	_____	- 004.2065 Ohm	_____	_____
20	Short	300 Ohm Rng (Chan 1)	+ 004.2065 Ohm	_____	- 004.2065 Ohm	_____	_____

PERFORMANCE TEST CARD
1 YEAR LIMITS

Hewlett-Packard Model 3457A
Digital Mutimeter
Serial Number_____

Test Performed by _____
Date _____
Reference Temperature_____

REAR INPUT TESTS (44492A 10 Channel Multiplex Assy)

Step#	3457 Input	Set-Up and Configuration	High Limit	Reading	Low Limit	Test Pass	Test Fail
	2-WIRE OHMS OFFSET TEST (44492A) CONT'D						
21	Short	300 Ohm Rng (Chan 2)	+ 004.2065 Ohm	_____	- 004.2065 Ohm	_____	_____
22	Short	300 Ohm Rng (Chan 3)	+ 004.2065 Ohm	_____	- 004.2065 Ohm	_____	_____
23	Short	300 Ohm Rng (Chan 4)	+ 004.2065 Ohm	_____	- 004.2065 Ohm	_____	_____
24	Short	300 Ohm Rng (Chan 5)	+ 004.2065 Ohm	_____	- 004.2065 Ohm	_____	_____
25	Short	300 Ohm Rng (Chan 6)	+ 004.2065 Ohm	_____	- 004.2065 Ohm	_____	_____
26	Short	300 Ohm Rng (Chan 7)	+ 004.2065 Ohm	_____	- 004.2065 Ohm	_____	_____
27	Short	300 Ohm Rng (Chan 8)	+ 004.2065 Ohm	_____	- 004.2065 Ohm	_____	_____
28	Short	300 Ohm Rng (Chan 9)	+ 004.2065 Ohm	_____	- 004.2065 Ohm	_____	_____

SECTION V
CALIBRATION

WARNING

The information contained in this section is intended for the use of service trained personnel who understand electronic circuitry and are aware of the hazards involved. Do not attempt to perform any of the procedures outlined in this section unless you are qualified to do so.

5-1. INTRODUCTION

5-2. Section V contains Manual Calibration Procedures for the HP 3457A Multimeter. Section V also contains information explaining the Calibration Security features built into the 3457A. The 3457A has only two screwdriver adjustments which, under normal conditions, do not require adjusting. All calibration is accomplished from the front panel or through computer control.

5-3. An Automatic Calibration procedure, which includes software and instructions, is available by ordering HP Part Number 03457-10085 (for use with the HP Model 85B) or 03457-10200 (for use with the HP Series 200 computer). The equipment listed below is preferred for use with the Automatic Calibration Procedure, however, other equipment may be used.

Controller	HP Model 85B Computer or HP Series 200 Computer
Frequency Counter	HP 5314A or HP 3457A
DC Voltage/Current Resistance Calibrator	Datron 4000A
AC Voltage/Current/Frequency Calibrator	Datron 4200

5-4. CALIBRATION SECURITY

5-5. The Calibration Security feature of the 3457A allows the person responsible for calibration of the unit to enter a Security Code to prevent accidental or unauthorized calibration.

5-6. Security Code

5-7. The Security Code is a six digit integer number from 0 through 999,999 (if the number entered is not an integer number, it will be rounded to an integer value and then used). The instrument is shipped from the factory with the Security Code set to 3457. Setting the code to zero disables the security feature.

5-8. Changing the Security Code (SECURE <old security code> , <new security code>). The procedure for changing the Security Code is as follows:

a. Access the SECURE command. *(Press the Blue SHIFT key, then the RECALL / S configuration key. Use the ↓ scroll key to display the SECURE command).*

b. Enter the old Security Code, the delimiter (,) and the new Security Code. *(The instrument is shipped from the factory with the security code set to 3457).* Example: To change the Security Code from 3457 to 7543, enter 3457 , 7543.

c. Press the ENT key. The instrument will now respond to the new Security Code.

5-9. In the event that the security code is unknown, the security feature can be disabled to permit a new code to be entered. To disable the security feature, complete the following steps.

a. Remove all power from the 3457A (line cord and external inputs) and turn the unit upside-down.

b. Loosen the six captive screws in the bottom cover. *(It is not necessary to remove these screws from the bottom cover).*

c. Return the unit to an upright position and remove the top cover.

d. Remove the NORM / DSA / KEY jumper (JM532) from the NORM position and place it in the KEY position. *(JM532 is located on the A1 logic board directly behind the front panel display).*

e. Reconnect the power and turn the instrument ON.

f. Access the SECURE command. *(Press the Blue SHIFT key then the RECALL / S configuration key. Use the ↓ scroll key to display the SECURE command).*

g. Enter the number 0, the delimiter (,) and the security number you wish to use.

h. Press the ENT key.

i. Disconnect power and return jumper JM532 to the NORM position.

j. Replace the top cover, tighten the retaining screws and reconnect the power. The instrument will now respond to the security code just entered.

NOTE

When jumper JM532 is in the KEY position, the security feature is disabled. It is possible to calibrate the instrument without entering a security number under these conditions. If a new security number is not entered while the jumper is in the KEY position, the original number will again be in effect when jumper JM532 is returned to the NORM position.

5-10. Calibration Number (CALNUM?)

5-11. The CALNUM? command provides you with a method of monitoring the number of calibrations performed. By using this command, you can determine whether un-authorized calibrations have occurred. The instrument will always respond the CALNUM query command by displaying the number of calibration RAM entries completed since factory initialization. factory initialization. The maximum calibration number which can be stored is 32767. After reaching the maximum number, the counter resets to 0 and begins again. Please note that the calibration number is increased by one for each calibration point. A complete calibration increases the calibration number by several digits.

5-12. The procedure for reading the Calibration Number is as follows:

a. Access the CALNUM? command. *(Press the Blue SHIFT key then the OFFSET COMP / C configuration key. Use the ↓ scroll key to display the CALNUM? command).*

b. Press the ENT key.

c. The display will show CALNUM? and the current calibration number.

d. Press any key to return the instrument to normal operation.

5-13. PRELIMINARY CALIBRATION PROCEDURES

5-14. The following steps should be performed prior to calibration of the 3457A:

a. Select the calibration area. The 3457A may be calibrated in a "bench" environment or in a system cabinet. For greatest accuracy, select an area where the temperature is between 18 °C and 28 °C and stable within ±5 °C.

b. Connect the 3457A to an appropriate power source and turn the instrument ON. The 3457A can operate on line voltages from 100 Vac to 240 Vac, 50 Hz or 60 Hz. Refer to Section II, Line Voltage Selection, for proper rear panel switch settings and fuse selection.

c. Remove all external input signals from the front and rear/scanner input terminals.

d. Run the instrument Self Test. *(Press the Blue SHIFT key then the ← / TEST key). The display will show* TESTING while the test routine is running.

1. If the display shows SELF TEST OK after the test has completed, continue with step " e ".

2. If the display shows TEST FAILED, check the ERROR message. *(Press the Blue SHIFT key then the - / ERROR key).*

- If the Error Message reads OUT OF CALIBRATION, continue with step " e ". *(It is probable that performing the Calibration Procedures will eliminate this error).*

- If the Error Message reads HARDWARE ERR, check the AUXERR? (Auxiliary Error) message for additional information. *(Press the Blue SHIFT key then the NPLC / A configuration key. Use the ↓ scroll key to display AUXERR. Press the ENT key).*

☐ An AUXERR? message of 16 indicates the Input Amplifier Offset is beyond tolerance. Perform the Input Amplifier Offset adjustment (Paragraph 5-15) and repeat steps " d " through " h " of this procedure.

☐ An AUXERR? message of 256 indicates the AC attenuator frequency compensation is beyond tolerance. Perform the AC Convertor Frequency Response adjustment (Paragraph 5-17) and repeat steps " d " through " h " of this procedure.

☐ An AUXERR? message, other than 16 or 256 indicates a component failure. Refer to Section VIII for repair procedures.

e. Allow the instrument to warm-up for a period of one hour.

f. Run the AUTO CAL (Auto-calibration) routine. *(Press the AUTO CAL configuration key, to display the ACAL command, enter the number 1 and press the ENT key).*

g. Record the Calibration Number if desired. (Refer to paragraph 5-10).

h. Proceed to the calibration procedures beginning at paragraph 5-19.

5-15. Input Amplifier Offset Adjustment

5-16. This adjustment is not required unless the Self Test response is HARDWARE ERR and the AUXERR message is 16. Adjust the Input Amplifier Offset as follows:

a. Remove all power from the 3457A (line cord and external inputs).

b. Loosen the two screws attaching the rear terminal assembly or terminal block assembly to the rear panel and remove the terminal or terminal block assembly.

c. Turn the instrument upside-down and loosen the six captive screws in the bottom cover. *(It is not necessary to remove these screws from the bottom cover).*

d. Return the unit to an upright position and remove the top cover.

e. With the front panel of the instrument facing you, move the plug-in support assembly slightly to the left to release the locking tab and lift the support assembly.

f. Lay the plug-in support assembly over the front panel to gain access to the Input Amplifier adjustment (Vos Adj A2R113).

g. Reconnect power to the instrument and turn it ON.

h. Enable Diagnostic Routine number 4. *(Press the Blue SHIFT key then the AUTO ZERO / D configuration key. Use the ↓ scroll key to display DIAGNOSTIC. Enter the number 4 and press the ENT key).*

i. Use an insulated adjustment tool to adjust A2-R113 (Vos adj) until the display reads PASSED.

j. Exit the Diagnostic Routine. *(Press and hold the → / RESET display key until a tone is heard).*

k. Turn the instrument OFF and remove the power cord.

l. Replace the plug-in support assembly, top cover and terminal or terminal block assembly.

m. Reconnect power and turn the instrument ON.

5-17. AC Convertor Frequency Response Adjustment

5-18. This adjustment is not required unless the Self-Test response is HARDWARE ERR and the AUXERR message is 256. Adjust the AC Convertor Frequency Response as follows:

a. Remove all power from the 3457A (line cord and external inputs).

b. Loosen the two screws attaching the rear terminal assembly or terminal block assembly to the rear panel and remove the terminal or terminal block assembly.

c. Turn the instrument upside-down and loosen the six captive screws in the bottom cover. *(It is not necessary to remove these screws from the bottom cover).*

d. Return the unit to an upright position and remove the top cover.

e. With the front panel of the instrument facing you, move the plug-in support assembly slightly to the left to release the locking tab and lift the support assembly.

f. Lay the plug-in support assembly over the front panel to gain access to the AC convertor frequency response adjustment (Gain/Flatness A3C332).

g. Reconnect power to the instrument and turn it ON.

h. Run the AC Auto-Cal routine. *(Press the AUTO CAL configuration key, enter the number 2 and press the ENT key).*

i. Enable Diagnostic Routine number 8. *(Press the Blue SHIFT key then the AUTO ZERO / D configuration key. Use the ↓ scroll key to display DIAGNOSTIC. Enter the number 8 and press the ENT key).*

j. Use an insulated adjustment tool to adjust A3-C332 (Gain/Flatness adj) until the display reads PASSED 0.

k. Exit the Diagnostic Routine. *(Press and hold the → / RESET display key until a tone is heard).*

l. Turn the instrument OFF and remove the power cord.

m. Replace the plug-in support assembly, top cover and terminal or terminal block assembly.

n. Reconnect power and turn the instrument ON.

5-19. CALIBRATION PROCEDURES - FRONT PANEL INPUTS

5-20. Calibration of the 3457A from the front input terminals consists of calibrating the offset and gain of each range for the DCV, 2-Wire Ohms, 4-Wire Ohms and DCI Functions and gain of each range for the ACV and ACI Functions. The FREQ Function is calibrated at one frequency.

NOTE

The Preliminary Calibration Procedures should be completed before attempting the following procedures.

5-21. DC Volts Offset Calibration - Front Terminals

5-22. Equipment Required. A low thermal short (copper wire) is required for this procedure.

a. Select the DC Voltage Function. *(Press the DCV function key).*

b. Connect a short between the front panel HI and LO input terminals.

c. Use the following procedure to calibrate the front terminal offset on the 30 mV, 300 mV, 3 V, 30 V and 300 V ranges beginning with the 300 V range and ending on the 30 mV range.

1. Set the 3457A to the appropriate voltage range. *(Use the ↑ or ↓ scroll key to select the proper voltage range).*

2. Access the Calibration Command. *(Press the Blue SHIFT key, then the OFFSET COMP / C configuration key).* The display will show CAL.

3. Enter the value of the input; in this case 0. *(NOTE: If the security feature has not been disabled, (set to 0) it will be necessary to enter the input value, the delimiter (,) and the security code).*

4. Press the ENT key. The display will show CALIBRATING while the calibration routine is running.

d. Repeat steps " c1 " through " c4 " for each of the remaining voltage ranges.

e. Remove the short from the front panel HI and LO Input Terminals.

5-23. DC Volts Gain Calibration - Front Terminals

5-24. Equipment Required. A DC Voltage Source capable of providing 30 mV (±.0055%), 300 mV (±.0012%), 3 V (±.0006%), 30 V (±.0013%) and 300 V (±.0017%) is required for the following procedure.

a. Set the HP 3457A to the 300 volt range. *(Use the ↑ scroll key to select the 300 V range).*

b. Connect the Voltage Source to the HP 3457A front panel HI and LO input terminals and set its output to 300 V.

c. Use the following steps to calibrate the DC Voltage Gain on the 300 V, 30 V, 3 V, 300 mV and 30 mV ranges beginning with the 300 V range and ending on the 30 mV range.

1. Set the 3457A to the appropriate voltage range. *(Use the ↑ or ↓ scroll key to select the proper voltage range).*

2. Set the voltage source to an output which will provide a full-scale reading on the HP 3457A.

3. Access the Calibration Command. *(Press the Blue SHIFT key, then the OFFSET COMP / C configuration key).* The display will show CAL.

4. Enter the value of the input voltage (in volts). *(NOTE: If the security feature has not been disabled, (set to 0) it will be necessary to enter the input value, the delimiter (,) and the security code).*

5. Press the ENT key. The display will show CALIBRATING while the calibration routine is running.

d. Repeat steps " c1 " through " c5 " for each of the remaining voltage ranges.

e. Set the output of the Voltage Source to 3 volts.

5-25. DC Volts Linearity Calibration - Front Terminals

5-26. Equipment Required. A DC Voltage Source capable of providing 3 V (±.0006%) is required to calibrate linearity of the DC Voltage Function.

a. Set the HP 3457A to the 3 volt range.

b. Set the Voltage Source for an output voltage of 3 Vdc.

c. Reverse the leads at the 3457A input terminals to provide a negative input voltage.

d. Access the Calibration Command. *(Press the Blue SHIFT key then the OFFSET COMP / C configuration key).* The display will will show CAL.

e. Enter the value of the input voltage (in volts), including the polarity. *(NOTE: If the security feature has not been disabled, (set to 0) it will be necessary to enter the input value, the delimiter (,) and the security code).*

f. Press the ENT key. The display will show CALIBRATING while the calibration routine is running.

g. Set the output of the Voltage Source to 0 V and disconnect it from the HP 3457A input terminals.

5-27. Two-Wire Ohms Offset Calibration - Front Terminals

5-28. Equipment Required. A low thermal short (copper wire) is required for this procedure.

a. Select the 2-Wire Ohms Function. *(Press the OHM function key).*

b. Connect a short between the Front Panel HI and LO input terminals.

c. Use the following procedure to calibrate the front terminal offset on the 30 ohm, 300 ohm, 3 Kohm, 30 Kohm, 300 Kohm, 3 Mohm and 30 Mohm ranges beginning with the 30 Mohm range.

1. Set the 3457A to the appropriate resistance range. *(Use the ↑ or ↓ scroll key to select the proper range).*

2. Access the Calibration Command. *(Press the Blue SHIFT key, then the OFFSET COMP / C configuration key).* The display will show CAL.

3. Enter the value of the input resistance - in this case 0. *(NOTE: If the security feature has not been disabled, (set to 0) it will be necessary to enter the input value, the delimiter (,) and the security code).*

4. Press the ENT key. The display will show CALIBRATING while the calibration routine is running.

d. Repeat steps " c1 " through " c4 " for each of the remaining ranges.

e. Remove the short from the Front Panel HI and LO Input Terminals.

5-29. Two-Wire Ohms Gain Calibration - Front Terminals

5-30. Equipment Required. Resistance Standards of 30 Ohms (±.2%), 300 Ohms (±.02%), 3 Kohms (±.003%), 30 Kohms (±.001%), 300 Kohms (±.001%), 3 Mohms (±.002%) and 30 Mohms (±.009%) are required to calibrate the 2-Wire Ohms Function.

a. Run the Ohms Auto-Calibration routine. *(Press the AUTO CAL configuration key, enter the number 3 and press the ENT key).*

b. Set the Resistance Standard to 30 MOhms and connect it to the HP 3457A front panel HI and LO input terminals.

c. Use the following procedure to calibrate the Gain on the 30 Mohm, 3 Mohm, 300 Kohm, 30 Kohm, 3 Kohm, 300 Ohm and 30 Ohm ranges beginning with the 30 Mohm range.

1. Set the 3457A to the appropriate Resistance range. *(Use the ↑ or ↓ scroll key to select the proper range).*

2. Set the resistance standard to the full-scale resistance of HP 3457A range selected.

3. Access the Calibration Command. *(Press the Blue SHIFT key, then the OFFSET COMP / C configuration key).* The display will show CAL.

4. Enter the value of the input resistance (in ohms). *(NOTE: If the security feature has not been disabled (set to 0), it will be necessary to enter the input value, the delimiter (,) and the security code).* 5. Press the ENT key. The display will show CALIBRATING while the calibration routine is running.

d. Repeat steps " c1 " through " c5 " for each of the remaining ranges.

e. Disconnect the resistance standard from the 3457A input terminals.

5-31. Four-Wire Ohms Offset Calibration - Front Terminals

5-32. Equipment Required. A low thermal short (copper wire) is required for this procedure. (Refer to Figure 5-1).

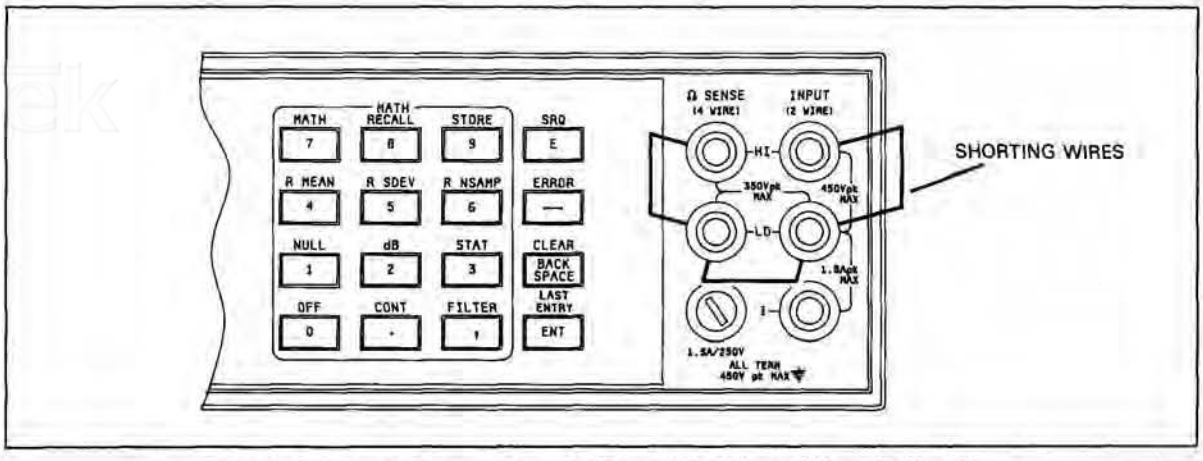

Figure 5-1. Input Connections for Four-Wire Ohms Offset Calibration

a. Select the 4-Wire Ohms Function. *(Press the Blue SHIFT key, then the OHM / OHMF key).*

b. Connect the short across the Front Panel HI and LO Input Terminals and the Ω Sense HI and LO terminals as shown in Figure 5-1.

c. Use the following procedure to calibrate the front terminal offset on the 30 Mohm, 3 Mohm, 300 Kohm, 30 Kohm, 3 Kohm, 300 Ohm and 30 Ohm ranges beginning with the 30 Mohm range.

1. Set the 3457A to the appropriate resistance range. *(Use the ↑ or ↓ scroll keys to select the proper range).*

2. Access the Calibration Command. *(Press the Blue SHIFT key, then the OFFSET COMP / C configuration key).* The display will show CAL.

3. Enter the value of the input - in this case 0. *(NOTE: If the security feature has not been disabled (set to 0), it will be necessary to enter the input value, the delimiter (,) and the security code).*

4. Press the ENT key. The display will show CALIBRATING while the calibration routine is running.

d. Repeat steps " c1 " through " c4 " for each of the remaining ranges.

e. Remove the shorting wires from the Front Panel Ω Source and Input terminals.

5-33. Four-Wire Ohms Gain Calibration - Front Terminals

5-34. Equipment Required. Resistance Standards capable of providing 30 Ohms (±.2%), 300 Ohms (±.02%), 3 Kohm (±.003%), 30 Kohms (±.001%), 300 Kohms (±.001%), 3 Mohms (±.002%) and 30 Mohms (±.009%) are required to calibrate the 4-Wire Ohms Function.

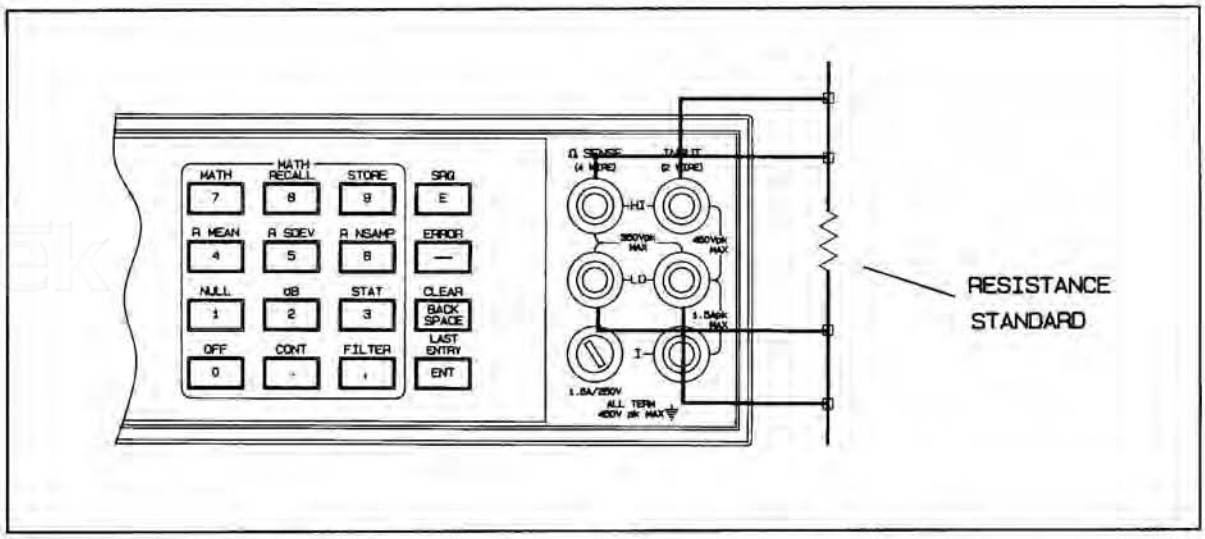

Figure 5-2. Input Connections for 4-Wire Ohms Gain Calibration

a. Run the Ohms Auto-Calibration routine. *(Press the AUTO CAL configuration key, enter the number 3 and press the ENT key).*

b. Set the Resistance Standard to 30 MOhms and connect it to the HP 3457A front panel HI and LO Input terminals and Ω Sense HI and LO terminals as shown in Figure 5-2.

c. Use the following procedure to calibrate the Gain on the 30 Mohm, 3 Mohm, 300 Kohm, 30 Kohm, 3 Kohm, 300 Ohm and 30 Ohm ranges beginning with the 30 Mohm range.

1. Set the 3457A to the appropriate Resistance range. *(Use the ↑ or ↓ scroll key to select the proper range).*

2. Set the resistance standard to the full-scale resistance of HP 3457A range selected.

3. Access the Calibration Command. *(Press the Blue SHIFT key, then the OFFSET COMP / C configuration key).* The display will show CAL.

4. Enter the value of the input resistance (in ohms). *(NOTE: If the security feature has not been disabled (set to 0), it will be necessary to enter the input value, the delimiter (,) and the security code).*

5. Press the ENT key. The display will show CALIBRATING while the calibration routine is running.

d. Repeat steps " c1 " through " c5 " for each of the remaining ranges.

e. Disconnect the resistance standard from the 3457A input terminals.

5-35. DC Current Offset Calibration - Front Terminals

5-36. Equipment Required. No equipment is needed for this procedure.

a. Be certain all leads are disconnected from the HP 3457A input terminals.

b. Select the DC Current Function. *(Press the DCI function key).*

c. Use the following procedure to calibrate the front terminal offset on the 1 A, 300 mA, 30 mA, 3 mA and 300 uA ranges beginning with the 1 A range.

1. Set the 3457A to the appropriate current range. *(Use the ↑ or ↓ scroll key to select the proper range).*

2. Access the Calibration Command. *(Press the Blue SHIFT key, then the OFFSET COMP / C configuration key).* The display will show CAL.

3. Enter the value of the input - in this case 0. *(NOTE: If the security feature has not been disabled (set to 0), it will be necessary to enter the input value, the delimiter (,) and the security code).*

4. Press the ENT key. The display will show CALIBRATING while the calibration routine is running.

d. Repeat steps " c1 " through " c4 " for each of the remaining ranges.

5-37. DC Current Gain Calibration - Front Terminals

5-38. Equipment Required. A DC Current Source capable of providing 300 uA, 3 mA, 30 mA (±.007%), 300 mA (±.026%) and 1 A (±.04%) is required to calibrate the DC Current Function.

a. Connect the Current Source to the HP 3457A front panel **I** and **LO** input terminals. Set the output of the Current Source to 1 A.

b. Use the following procedure to calibrate the front terminal gain on the 1 A, 300 mA, 30 mA, 3 mA and 300 uA ranges beginning with the 1 A range.

1. Set the 3457A to the appropriate current range. *(Use the ↑ or ↓ scroll key to select the proper range).*

2. Set the current source to provide a full-scale reading on the HP 3457A range selected.

3. Access the Calibration Command. *(Press the Blue SHIFT key, then the OFFSET COMP / C configuration key).* The display will show CAL.

4. Enter the value of the input current (in amps). *(NOTE: If the security feature has not been disabled (set to 0), it will be necessary to enter the input value, the delimiter (,) and the security code).*

5. Press the ENT key. The display will show CALIBRATING while the calibration routine is running.

c. Repeat steps " b1 " through " b4 " for each of the remaining ranges.

5-39. AC Volts Offset & Gain Calibration - Front Terminals

5-40. Equipment Required. An AC Voltage Source capable of providing 30 mVrms, 300 mVrms, 1 Vrms, 2 Vrms, 3 Vrms, 30 Vrms and 300 Vrms (±0.1%) at a frequency of 1 KHz is required to calibrate the AC Voltage Function.

a. Select the AC Voltage function. *(Press the ACV function key).*

b. Run the AC Auto-Calibration routine. *(Press the AUTO CAL configuration key, enter the number 2 and press the ENT key).*

c. Set the AC Voltage Source to provide a 3 volt, 1 kHz signal and connect it to the front panel HI and LO input terminals.

NOTE

The 3457A must be calibrated on the 3 volt range before calibrating the other ranges. This is because the offset constant for all ac voltage and ac current ranges is computed while calibrating the 3 Vac range.

d. Set the 3457A to the 3 volt range. *(Use the ↑ or ↓ scroll keys to select the proper range).*

e. Use the following procedure to calibrate the Gain on the 30 mV, 300 mV, 3 V, 30 V and 300 V AC ranges beginning with the 3 V range.

1. Set the 3457A to the appropriate voltage range. *(Use the ↑ or ↓ scroll key to select the proper range).*

2. Set the output of the AC voltage source to provide a full-scale reading on the HP 3457A.

3. Access the Calibration Command. *(Press the Blue SHIFT key, then the OFFSET COMP / C configuration key).* The display will show CAL.

4. Enter the value of the input voltage (in volts). *(NOTE: If the security feature has not been disabled (set to 0), it will be necessary to enter the input value, the delimiter (,) and the security code).*

5. Press the ENT key. The display will show CALIBRATING while the calibration routine is running.

f. Repeat steps " e1 " through " e4 " for each of the remaining ranges.

g. Set the output of the AC Voltage Source to 0 and disconnect it from HP the 3457A.

5-41. AC Current Calibration - Front Terminals

5-42. Equipment Required. An AC Current Source capable of providing 30 mA (±.14%), 300 mA (±.14%) and 1 A (±.24%) at a frequency of 1 KHz is required to calibrate the AC Current Function.

a. Select the AC Current function. *(Press the ACI function key).*

b. Set the AC Current Source to provide an output of 30 mA and connect it to the HP 3457A front panel I and LO input terminals.

c. Use the following procedure to calibrate the AC Current function on the 30 mA, 300 mA and 1 A ranges beginning with the 30 mA range.

1. Set the 3457A to the appropriate current range. *(Use the ↑ or ↓ scroll key to select the proper range).*

2. Set the current source to provide a full-scale reading on the HP 3457A range selected.

3. Access the Calibration Command. *(Press the Blue SHIFT key, then the OFFSET COMP / C configuration key).* The display will show CAL.

4. Enter the value of the input current (in amps). *(NOTE: If the security feature has not been disabled (set to 0), it will be necessary to enter the input value, the delimiter (,) and the security code).*

5. Press the ENT key. The display will show CALIBRATING while the calibration routine is running.

d. Repeat steps " c1 " through " c5 " for each of the remaining ranges.

e. Set the Current Source for an output of 0 and disconnect it from the HP 3457A.

5-43. Frequency Calibration - Front Terminals

5-44. Equipment Required. A Frequency Generator capable of providing a single sine-wave signal between 100 Hz and 1 MHz with a frequency accuracy of ±.003%) is required to calibrate the Frequency Function.

a. Set the 3457A to the Frequency function. *(Press the FREQ function key).*

b. Set the Frequency Source to a known frequency between 100 Hz and 1 MHz and connect it to the HP 3457A front panel HI and LO input terminals.

c. Access the Calibration command. *(Press the Blue SHIFT key, then the OFFSET COMP / C configuration key).* The display will show CAL.

d. Enter the value of the input frequency (in hertz). *(NOTE: If the security feature has not been disabled (set to 0), it will be necessary to enter the input frequency, the delimiter (,) and the security code).*

e. Press the ENT key. The display will show CALIBRATING while the calibration routine is running.

f. Disconnect the Frequency Source from the HP 3457A.

5-45. CALIBRATION PROCEDURES - REAR PANEL INPUTS

5-46. The following paragraphs describe the calibration process for the HP 3457A rear panel inputs. Separate procedures are provided for the standard instrument (Rear Input Terminals), and instruments equipped with optional plug-in assemblies 44491A (General Purpose Relay Assembly) and 44492A (Reed Relay Multiplex Assembly). Select the procedure which applies to your instrument.

5-47. DC Volts Offset Calibration - Rear Terminals (Standard Instrument)

5-48. Equipment Required. A low thermal short (copper wire) is required for this procedure.

a. Short the Ω SENSE HI and LO and INPUT HI and LO rear input terminals together.

b. Select the rear input terminals. *(Press the TERM configuration key, enter the number 2 and press the ENT key).*

c. Select the DC Voltage function. *(Press the DCV function key).*

d. Use the following procedure to calibrate the rear terminal offset on the 300 V, 30 V, 3 V, 300 mV, and 30 mV ranges beginning with the 300 V range.

1. Set the 3457A to the appropriate voltage range. *(Use the ↑ or ↓ scroll key to select the proper voltage range).*

2. Access the Calibration command. *(Press the Blue SHIFT key, then the OFFSET COMP / C configuration key).* The display will show CAL.

3. Enter the value of the input - in this case 0. *(NOTE: If the security feature has not been disabled (set to 0), it will be necessary to enter the input value, the delimiter (,) and the security code).*

4. Press the ENT key. The display will show CALIBRATING while the calibration routine is running.

e. Repeat steps " d1 " through " d4 " for each of the remaining voltage ranges.

5-49. Two-Wire Ohms Offset Calibration - Rear Terminals (Standard Instrument)

5-50. Equipment Required. A low thermal short is required for this procedure.

a. Short the Ω SENSE HI and LO and INPUT HI and LO rear input terminals together.

b. Select the rear input terminals. *(Press the TERM configuration key, enter the number 2 and press the ENT key).*

c. Select the 2-Wire Ohms function. *(Press the OHM function key).*

d. Use the following procedure to calibrate the rear terminal offset on the 30 Mohm, 3 Mohm, 300 Kohm, 30 Kohm, 3 Kohm, 300 Ohm and 30 Ohm ranges beginning with the 30 Mohm range.

1. Set the 3457A to the appropriate resistance range. *(Use the ↑ or ↓ scroll key to select the proper range).*

2. Access the Calibration command. *(Press the Blue SHIFT key, then the OFFSET COMP / C configuration key).* The display will show CAL.

3. Enter the value of the input; in this case 0. *(NOTE: If the security feature has not been disabled (set to 0), it will be necessary to enter the input value, the delimiter (,) and the security code).*

4. Press the ENT key. The display will show CALIBRATING while the calibration routine is running.

e. Repeat steps " d1 " through " d4 " for each of the remaining ranges.

5-51. Four-Wire Ohms Offset Calibration - Rear Terminals (Standard Instrument)

5-52. Equipment Required. A low thermal short (copper wire) is required for this procedure.

a. Short the → SENSE HI and LO and INPUT HI and LO rear input terminals together.

b. Select the rear input terminals. *(Press the TERM configuration key, enter the number 2 and press the ENT key).*

c. Select the 4-Wire Ohms function. *(Press the Blue SHIFT key, then the OHM / OHMF function key).*

d. Use the following procedure to calibrate the rear terminal offset on the 30 Mohm, 3 Mohm, 300 Kohm, 30 Kohm, 3 Kohm, 300 Ohm and 30 Ohm ranges beginning with the 30 Mohm range.

1. Set the 3457A to the appropriate resistance range. *(Use the ↑ or ↓ scroll key to select the proper range).*

2. Access the Calibration command. *(Press the Blue SHIFT key, then the OFFSET COMP / C configuration key).* The display will show CAL.

3. Enter the value of the input - in this case 0. *(NOTE: If the security feature has not been disabled (set to 0), it will be necessary to enter the input value, the delimiter (,) and the security code).*

4. Press the ENT key. The display will show CALIBRATING while the calibration routine is running.

e. Repeat steps " d1 " through " d4 " for each of the remaining ranges.

5-53. DC Current Offset Calibration - Rear Terminals (Standard Instrument)

5-54. Equipment Required. No equipment is needed for this procedure.

a. Select the rear input terminals. *(Press the TERM configuration key, enter the number 2 and press the ENT key).*

b. Select the DC Current function. *(Press the DCI function key).*

c. Use the following procedure to calibrate the rear terminal offset on the 300 uA, 3 mA, 30 mA, 300 mA, and 3 A ranges beginning with the 3 A range.

1. Set the 3457A to the appropriate current range. *(Use the ↑ or ↓ scroll key to select the proper range).*

2. Access the Calibration command. *(Press the Blue SHIFT key, then the OFFSET COMP / C configuration key).* The display will show CAL.

3. Enter the value of the input - in this case 0. *(NOTE: If the security feature has not been disabled (set to 0), it will be necessary to enter the input value, the delimiter (,) and the security code).*

4. Press the ENT key. The display will show CALIBRATING while the calibration routine is running.

d. Repeat steps " c1 " through " c4 " for each of the remaining ranges.

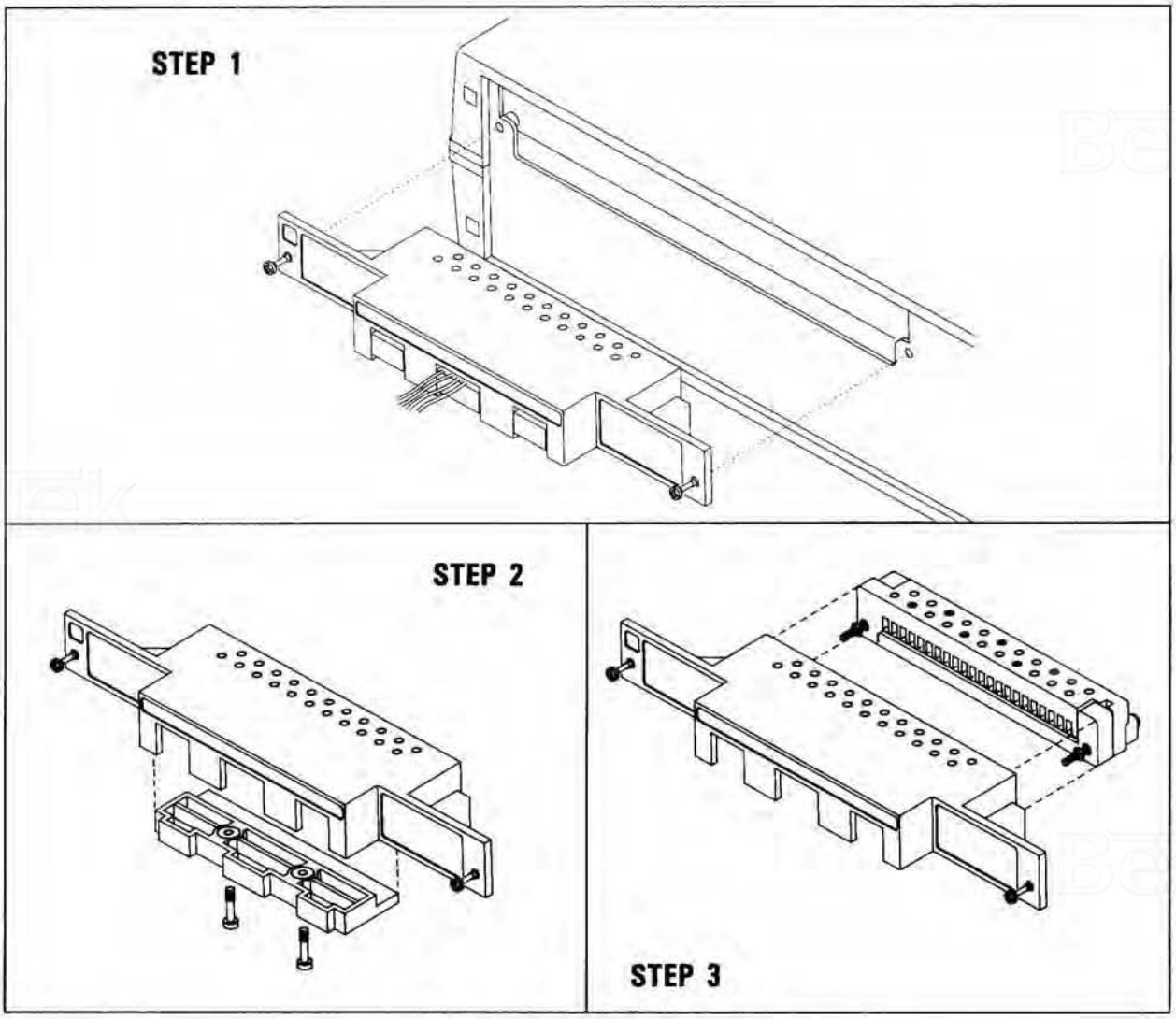

Figure 5-3. Terminal Block Removal

5-55. CALIBRATION PROCEDURES - HP 44491A GENERAL PURPOSE RELAY ASSEMBLY

5-56. Wiring Block Preparation

5-57. It will be necessary to connect shorting wires to the Plug-In Assembly Wiring Block before calibration can be performed. The following procedures outline the wiring block preparation.

WARNING

This procedure assumes that the Wiring Block is new and has no wires connected to it. If the Wiring Block is connected to an external device, hazardous voltages may be exposed when the Strain Relief/Wiring Block Assembly is removed.

a. Remove the two screws attaching the Strain Relief/Wiring Block Assembly to the rear panel and disconnect it from the instrument. (Refer to Figure 5-3, Step 1).

b. Remove the Strain Relief Plate from the bottom of the Strain Relief Assembly (Figure 5-3, Step 2).

c. Remove the Wiring Block from the Strain Relief Housing (Figure 5-3, Step 3).

d. Install copper shorting wires from INput HI to INput LO, from INput HI to Ω Sense HI, and from INput LO to Ω Sense LO on 4-Wire Ω input channel 10. Securely tighten the appropriate retaining screws. (Refer to Figure 5-4 for wire connections).

e. Connect the prepared Wiring Block Assembly to the HP 44491A General Purpose Relay Assembly.

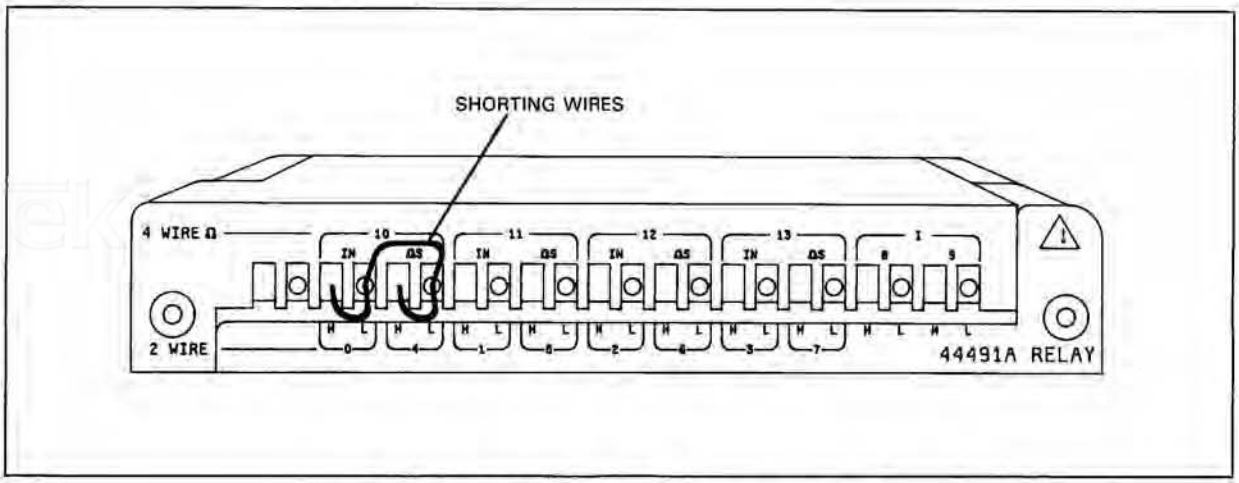

Figure 5-4. 44491A Wiring Block Connections

5-58. DC Volts Offset Calibration - HP 44491A

a. Select the DC Voltage function. *(Press the DCV function key).*

b. Select the Scanner Input. *(Press the TERM configuration key, enter the number 2 and press the ENT key).*

c. Select channel 0. *(Press the CHAN configuration key, enter the number 0 and press the ENT key).*

d. Use the following procedure to calibrate the DC offset on the 300 V, 30 V, 3 V, 300 mV and 30 mV ranges beginning with the 300 V range.

1. Set the 3457A to the appropriate range. *(Use the ↑ or ↓ scroll keys to select the proper range).*

2. Access the Calibration Command. *(Press the Blue SHIFT key, then the OFFSET COMP / C configuration key).* The display will show CAL.

3. Enter the value of the input - in this case 0. *(NOTE: If the security feature has not been disabled (set to 0), it will be necessary to enter the input value, the delimiter (,) and the security code).*

4. Press the ENT key. The display will show CALIBRATING while the calibration routine is running.

e. Repeat steps " d1 " through " d4 " for each of the remaining ranges.

5-59. Two-Wire Ohms Offset Calibration - HP 44491A

a. Select the 2-Wire Ohms function. *(Press the OHM function key).*

b. Close channel 0. *(Press the CHAN configuration key, enter the number 0 and press the ENT key).*

c. Use the following procedure to calibrate the 2-wire ohm offset on the 30 Mohm, 3 Mohm, 300 Kohm, 30 Kohm, 3 Kohm, 300 Ohm and 30 Ohm ranges beginning with the 30 Mohm range.

1. Set the 3457A to the appropriate resistance range. *(Use the ↑ or ↓ scroll keys to select the proper range).*

2. Access the Calibration Command. *(Press the Blue SHIFT key, then the OFFSET COMP / C configuration key).* The display will show CAL.

3. Enter the value of the input - in this case 0. *(NOTE: If the security feature has not been disabled (set to 0), it will be necessary to enter the input value, the delimiter (,) and the security code).*

4. Press the ENT key. The display will show CALIBRATING while the calibration routine is running.

d. Repeat steps " c1 " through " c4 " for each of the remaining ranges.

5-60. Four-Wire Ohms Offset Calibration - HP 44491A

a. Select the 4-Wire Ohms function. *(Press the Blue SHIFT key then the OHM / OHMF function key).*

b. Close channel 10. *(Press the CHAN configuration key, enter the number 10 and press the ENT key).*

c. Use the following procedure to calibrate the 4-Wire ohm offset on the 30 Mohm, 3 Mohm, 300 Kohm, 30 Kohm, 3 Kohm, 300 Ohm and 30 Ohm ranges beginning with the 30 Mohm range.

1. Set the 3457A to the appropriate resistance range. *(Use the ↑ or ↓ scroll keys to select the proper range).*

2. Access the Calibration Command. *(Press the Blue SHIFT key, then the OFFSET COMP / C configuration key).* The display will show CAL.

3. Enter the value of the input - in this case 0. *(NOTE: If the security feature has not been disabled (set to 0), it will be necessary to enter the input value, the delimiter (,) and the security code).*

4. Press the ENT key. The display will show CALIBRATING while the calibration routine is running.

d. Repeat steps " c1 " through " c4 " for each of the remaining ranges.

5-61. DC Current Offset Calibration - HP 44491A

a. Select the DC Current function. *(Press the DCI function key.)*

b. Select the Scanner Input. *(Press the TERM configuration key, enter the number 2, and press the ENT key.)*

c. Use the following procedures to calibrate the DC Current offset on the 300 uA, 3 mA, 30 mA, 300 mA and 3 A ranges beginning with the 3 A range.

1. Set the 3457A to the appropriate current range. *(Use the ↑ or ↓ scroll key to select the proper range.)*

2. Access the Calibration Command. *(Press the Blue SHIFT key, then the OFFSET COMP / C configuration key.)* The display will show CAL.

3. Enter the value of the input - in this case 0. *(NOTE: If the security feature has not been disabled (set to 0), it will be necessary to enter the input value, the delimiter (,) and the security code.)*

4. Press the ENT key. The display will show CALIBRATING while the calibration routine is running.

e. Repeat steps " c1 " through " c4 " for each of the remaining ranges.

5-62. CALIBRATION PROCEDURES - HP 44492A 10 CHANNEL MULTIPLEXER ASSEMBLY

5-63. Wiring Block Preparation

5-64. It will be necessary to connect a shorting wire to the Plug-In Assembly Wiring Block before calibration can be performed. The following procedure outlines the wiring block preparation.

WARNING

This procedure assumes that the Wiring Block is new and has no wires connected to it. If the Wiring Block is connected to an external device, hazardous voltages may be exposed when the Strain Relief/Wiring Block Assembly is removed.

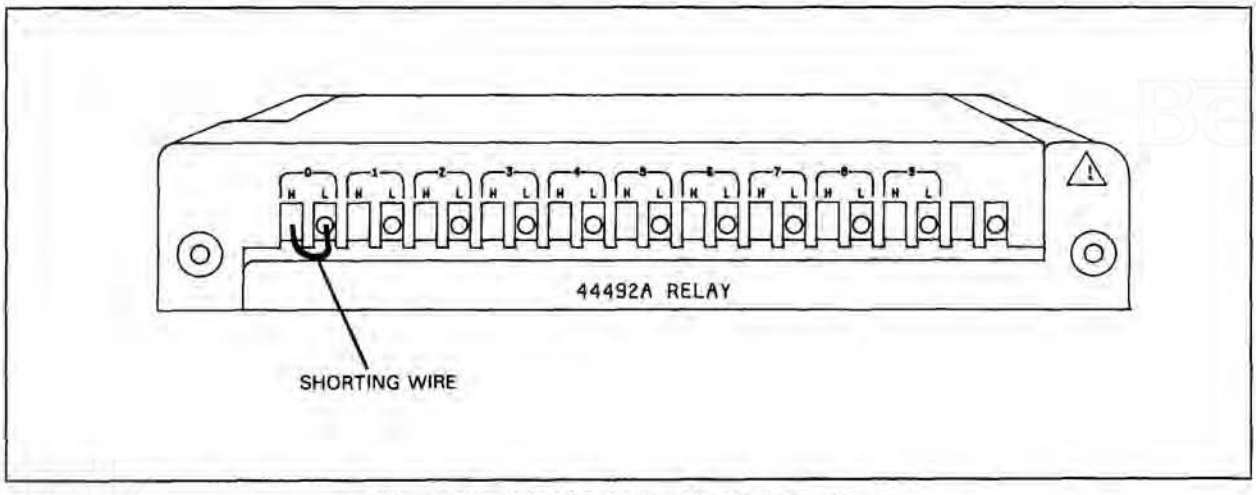

Figure 5-5. 44492A Wiring Block Connections

a. Remove the two screws attaching the Strain Relief/Wiring Block Assembly to the rear panel and disconnect it from the instrument. (Refer to Figure 5-3, Step 1).

b. Remove the Strain Relief Plate from the bottom of the Strain Relief Assembly (Figure 5-3, Step 2).

c. Remove the Wiring Block from the Strain Relief Housing (Figure 5-3, Step 3).

d. Install a copper shorting wire between the H and L inputs of channel 0. Tighten the two retaining screws. (Refer to Figure 5-5 for wire connection).

e. Connect the prepared Wiring Block Assembly to the HP 44492A 10 Channel Multiplexer Assembly.

5-65. DC Volts Offset Calibration - HP 44492A

a. Select the DC Voltage function. *(Press the DCV function key).*

b. Select the Scanner Input. *(Press the TERM configuration key, enter the number 2 and press the ENT key).*

c. Select channel 0. *(Press the CHAN configuration key, enter the number 0 and press the ENT key).*

d. Use the following procedure to calibrate the DC offset on the 300 V, 30 V, 3 V, 300 mV and 30 mV ranges beginning with the 300 V range.

1. Set the 3457A to the appropriate range. *(Use the ↑ or ↓ scroll keys to select the proper range).*

2. Access the Calibration Command. *(Press the Blue SHIFT key, then the OFFSET COMP / C configuration key).* The display will show CAL.

3. Enter the value of the input - in this case 0. *(NOTE: If the security feature has not been disabled (set to 0), it will be necessary to enter the input value, the delimiter (,) and the security code).*

4. Press the ENT key. The display will show CALIBRATING while the calibration routine is running.

e. Repeat steps " d1 " through " d4 " for each of the remaining ranges.

5-64. Two-Wire Ohms Offset Calibration - HP 44492A

a. Select the 2-Wire Ohms function. *(Press the OHM function key).*

b. Close channel 0. *(Press the CHAN configuration key, enter the number 0 and press the ENT key).*

c. Use the following procedure to calibrate the 2-wire ohm offset on the 30 Mohm, 3 Mohm, 300 Kohm, 30 Kohm, 3 Kohm and 300 Ohm ranges beginning with the 30 Mohm range.

1. Set the 3457A to the appropriate resistance range. *(Use the ↑ or ↓ scroll keys to select the proper range).*

2. Access the Calibration Command. *(Press the Blue SHIFT key, then the OFFSET COMP / C configuration key).* The display will show CAL.

3. Enter the value of the input - in this case 0. *(NOTE: If the security feature has not been disabled (set to 0), it will be necessary to enter the input value, the delimiter (,) and the security code).*

4. Press the ENT key. The display will show CALIBRATING while the calibration routine is running.

d. Repeat steps " c1 " through " c4 " for each of the remaining ranges.

SECTION VI
REPLACEABLE PARTS

6-1. INTRODUCTION

6-2. This section contains information for ordering replacement parts. Table 6-2 lists the mechanical parts and printed circuit assemblies in alphanumeric order of their reference designators. Electrical component parts information is not included in this manual. Table 6-2 includes the reference designator, HP Part Number, quantity used, part description (Refer to abbreviations listed in Table 6-1), a five-digit manufacturer's code and the manufacturer's part number for each part. Also included in this section are disassembly/assembly procedures for replacement of mechanical parts and printed circuit assemblies.

6-3. ORDERING INFORMATION

6-4. Listed Parts

6-5. To obtain a part listed in the Replaceable Parts table, quote the *Hewlett-Packard* part number, the quantity required, and address the order to the nearest *Hewlett-Packard* Office. (Office Locations are listed at the back of this manual.)

6-6. Non-Listed Parts

6-7. To order a part that is not listed in the replaceable parts table, include the instrument model number, instrument serial number, description and function of the part, and number of parts required. Address the order to the nearest *Hewlett-Packard* Office.

6-8. Direct Mail Order System

6-9. Within the USA, *Hewlett-Packard* can supply parts through a direct mail order system. Advantages of using the system are:

a. Direct ordering and shipment from the HP Parts Center at Mountain View, California.

b. No maximum or minimum order amount on any mail order (there is a minimum order amount for parts ordered through a local HP office when the orders require billing and invoicing).

c. Prepaid transportation (there is a small handling charge for each order).

d. No invoices - to provide these advantages, a check, money order or VISA or Mastercard number (with expiration date) must accompany each order.

6-10. Mail order forms and specific ordering information is available through your local HP office. Addresses and phone numbers are listed at the back of this manual.

6-11. PART CHANGES

6-12. Components which have been changed are so marked by one of three symbols; a delta (Δ), a delta with a letter subscript (Δ_a) or a delta with a numeric subscript (Δ_{10}). A delta with no subscript indicates the component listed is the preferred replacement for an earlier component. A delta with a letter subscript indicates a change which is explained in a note at the bottom of the page. A delta with a numeric subscript indicates the related change is discussed in backdating (Section VII). The number of the subscript indicates the change number in the backdating section.

6-13. PROPRIETARY PARTS

6-14. Items marked by a dagger (†) in the reference designator column are available only for repair and service of *Hewlett-Packard* instruments.

Table 6-1. Standard Abbreviations

Ag	silver	Hz	hertz (cycle(s) per second)	NPO	negative positive zero (zero temperature coefficient)	sl	slide
Al	aluminum			ns	nanosecond(s) = 10^{-9} seconds	SPDT	single-pole double-throw
A	ampere(s)	ID	inside diameter	nsr	not separately replaceable	SPST	single-pole single-throw
Au	gold	impg	impregnated				
		incd	incandescent			Ta	tantalum
C	capacitor	ins	insulation(ed)	Ω	ohm(s)	TC	temperature coefficient
cer	ceramic			obd	order by description	TiO_2	titanium dioxide
coef	coefficient	kΩ	kilohm(s) = 10^{+3} ohms	OD	outside diameter	tog	toggle
com	common	kHz	kilohertz = 10^{+3} hertz			tol	tolerance
comp	composition			p	peak	trim	trimmer
conn	connection	L	inductor	pA	picoampere(s)	TSTR	transistor
		lin	linear taper	pc	printed circuit		
dep	deposited	log	logarithmic taper	pF	picofarad(s) 10^{-12} farads	V	volt(s)
DPDT	double-pole double-throw			piv	peak inverse voltage	vacw	alternating current working voltage
DPST	double-pole single-throw	mA	milliampere(s) = 10^{-3} amperes	p/o	part of	var	variable
		MHZ	megahertz = 10^{+6} hertz	pos	position(s)	vdcw	direct current working voltage
elect	electrolytic	MΩ	megohm(s) = 10^{+6} ohms	poly	polystyrene		
encap	encapsulated	met flm	metal film	pot	potentiometer	W	watt(s)
		mfr	manufacturer	p-p	peak-to-peak	w/	with
F	farad(s)	ms	millisecond	ppm	parts per million	wiv	working inverse voltage
FET	field effect transistor	mtg	mounting	prec	precision (temperature coefficient, long term stability and/or tolerance)	w/o	without
fxd	fixed	mV	millivolt(s) = 10^{-3} volts			ww	wirewound
		μF	microfarad(s)				
GaAs	gallium arsenide	μs	microsecond(s)	R	resistor		
GHz	gigahertz = 10^{+9} hertz	μV	microvolt(s) = 10^{-6} volts	Rh	rhodium		
gd	guarded	my	Mylar ®	rms	root-mean-square	*	optimum value selected at factory, average value shown (part may be omitted)
Ge	germanium			rot	rotary	**	no standard type number assigned selected or special type
gnd	grounded	nA	nanoampere(s) = 10^{-9} amperes				
		NC	normally closed	Se	selenium		
H	henry(ies)	Ne	neon	sect	section(s)		
Hg	mercury	NO	normally open	Si	silicon		® Dupont de Nemours

DESIGNATORS

A	assembly	FL	filter	Q	transistor	TS	terminal strip
B	motor	HR	heater	QCR	transistor-diode	U	microcircuit
BT	battery	IC	integrated circuit	RIp	resistor(pack)	V	vacuum tube, neon bulb, photocell, etc.
C	capacitor	J	jack	RT	thermistor	W	cable
CR	diode or thyristor	K	relay	S	switch	X	socket
DL	delay line	L	inductor	T	transformer	XDS	lampholder
DS	lamp	M	meter	TB	terminal board	XF	fuseholder
E	misc electronic part	MP	mechanical part	TC	thermocouple	Y	crystal
F	fuse	P	plug	TP	test point	Z	network

6-15. DISASSEMBLY/ASSEMBLY PROCEDURES

6-16. The following procedures explain how to remove and replace certain cabinet parts and printed circuit assemblies.

WARNING

To avoid personal injury, be certain that the line power and all external inputs are disconnected from the HP 3457A before proceeding with any disassembly procedures.

CAUTION

To prevent damage to the HP 3457A, observe static handling and clean handling techniques when disassembling.

6-17. Rear Terminal Assembly Removal

6-18. No prior disassembly of the instrument is required to remove the Rear Terminal Assembly. Remove the Rear Terminal Assembly as follows:

a. Remove the power cord and all external input connections from the HP 3457A.

b. Remove the two screws attaching the Terminal Assembly to the rear panel.

c. Remove the Terminal Assembly from the rear panel and disconnect the attached connector.

d. Replace the Terminal Assembly by reversing the order of steps a through c.

6-19. Optional Plug-In Assembly Removal

6-20. No prior disassembly of the instrument is required to remove the Optional Plug-In Assemblies. Remove the Optional Plug-In Assemblies as follows:

a. Remove the power cord and all external input connections from the HP 3457A.

b. Remove the two screws attaching the Terminal Block Assembly to the rear panel.

c. Remove the Terminal Block Assembly.

d. Lift the two white locking levers to release the locking mechanism.

e. Use the holes provided in the corners of the Plug-In Assembly shield to pull the assembly free of the instrument.

f. Squeeze the locking tabs of the attached connector together and disconnect the connector.

g. To replace the Plug-In Assembly, reverse the order of steps a through f.

6-21. Top Cover Removal

6-22. No prior disassembly of the instrument is required to remove the Top Cover. Remove the Top Cover as follows:

a. Remove the power cord and all external input connections from the HP 3457A.

b. Turn the unit upside down and loosen the six screws in the bottom cover. (These are captive screws. It is not necessary to remove them completely).

c. Return the unit to an upright position and remove the top cover.

d. To replace the top cover, reverse the order of steps a through c.

6-23. Display Assembly Removal

6-24. The Top Cover must be removed prior to removing the Display Assembly. Remove the Display Assembly as follows:

a. Remove the Top Cover as described in paragraph 6-21.

b. Disconnect the plug on the back of the Display Assembly.

CAUTION

The pins of the plug connected to the display assembly are quite fragile. Disconnect the plug by pulling on the ribbon cable rather than the plug itself.

c. Remove the two screws attaching the Display Assembly to the Front Panel.

d. Remove the Display Assembly from the Front Panel.

e. To replace the Display Assembly, reverse the order of steps a through d.

6-25. Digital (A1) Assembly Removal

6-26. It will be necessary to remove the Top Cover prior to removing the Digital Assembly. To remove the Digital Assembly:

a. Remove the Top Cover as described in paragraph 6-21.

b. Remove the four screws holding the shield to the Digital (A1) Assembly and remove the shield.

c. Remove the power switch pushrod. Grasp the pushrod firmly near the power switch and pull it off the power switch shaft.

d. Disconnect connectors A1-P501 (Use the white pull strap), A1-P502, A1-P701 and A1-P702 from the Digital Assembly.

e. Remove the two screws attaching the HPIB Connector/Heat Sink bracket to the rear panel.

f. Remove the Digital Assembly by raising the front edge of the board and sliding it forward.

g. To replace the Digital (A1) Assembly, reverse the order of steps a through f.

6-27. Plug-In Support Assembly Removal

6-28. The Rear Terminal Assembly or Plug-In Assembly and Top Cover must be removed prior to removing the Plug-In Support Assembly. Remove the Support Assembly as follows:

a. Remove the Rear Terminal Assembly (paragraph 6-17) or Plug-In Assembly (paragraph 6-19) and Top Cover (paragraph 6-21).

b. With the front panel of the instrument facing you, move the Plug-In Support Assembly slightly to the left to release the locking tab, and lift the support upward.

c. Lay the Plug-In Support Assembly over the front panel to gain access to the Top Analog Shield. (The Support Assembly will be supported by its cables.)

d. Remove the Top Analog Shield. (Press the sheet metal tabs near the center of the instrument to release the shield, lift the shield and remove it.)

e. Disconnect connector A2-P501 and the five input wires to remove the Support Assembly.

f. To replace the Plug-In Support Assembly, reverse the order of steps a through e.

6-29. AC Convertor (A3) Assembly Removal

6-30. It will be necessary to remove the Rear Terminal Assembly or Plug-In Assembly, Top Cover, and Plug-In Support Assembly prior to removing the AC Convertor Assembly.

a. Remove the Rear Terminal Assembly (paragraph 6-17) or Plug-In Assembly (paragraph 6-19), Top Cover (paragraph 6-21) and Plug-In Support Assembly (paragraph 6-27).

b. Disconnect the red and black input wires and connector A2-P303 from the Analog (A2) Assembly.

c. Remove the screw located near the center of the AC Convertor Assembly.

d. Remove the AC Convertor Assembly.

e. To replace the AC Convertor Assembly, reverse steps a through d.

6-31. Analog (A2) Assembly Removal

6-32. The Rear Terminal Assembly or Plug-In Assembly, Top Cover, Plug-In Support Assembly, and AC Convertor (A3) Assembly must be removed prior to removing the Analog (A2) Assembly. Remove the Analog Assembly as follows:

a. Remove the Rear Terminal Assembly (paragraph 6-17) or Plug-In Assembly (paragraph 6-19), Top Cover (paragraph 6-21), Plug-In Support Assembly (paragraph 6-27) and AC Convertor Assembly (paragraph 6-29).

b. Disconnect the five input wires from the front panel and connectors A1-P502 and A2-P901.

c. Remove the seven screws which hold the A2 Assembly to the bottom shield. (It is not necessary to remove the screws from the Reference Assembly.)

d. Slide the Analog Assembly toward the rear of the instrument to clear the fuse holder from the front panel and remove the assembly.

e. To replace the Analog Assembly, reverse steps a through d.

6-33. Front Panel Removal

6-34. It is necessary to remove the Rear Terminal Assembly or Plug-In Assembly, Top Cover, Plug-In Support Assembly, AC Convertor (A3) Assembly and Analog (A2) Assembly prior to removing the Front Panel Assembly. Remove the Front Panel Assembly as follows:

a. Remove the Rear Terminal Assembly (paragraph 6-17) or Plug-In Assembly (paragraph 6-19), Top Cover (paragraph 6-21), Plug-In Support Assembly (paragraph 6-27), AC Convertor (A3) Assembly (paragraph 6-29) and Analog (A2) Assembly (paragraph 6-31).

b. Disconnect connector A1-P501 from the Digital (A1) Assembly.

c. Remove the screw attaching the Front Panel to the bottom shield of the Digital Assembly.

d. Lift the Front Panel clear of the bottom cover.

e. To replace the Front Panel Assembly, reverse the order of steps a through d.

Table 6-2. Replaceable Parts

Reference Designation	HP Part Number	C D	Qty	Description	Mfr Code	Mfr Part Number
A1	03457-66501	7	1	PC ASSY-DIGITAL	28480	03457-66501
A1BT501	1420-0278	7	1	BATTERY 3V .72A-HR LI/S-DIOX W-FLEX	28480	1420-0278
A1C500	0160-4812	0	2	CAPACITOR-FXD 220PF +-5% 100VDC CER	28480	0160-4812
A1C501	0160-4788	9	2	CAPACITOR-FXD 18PF +-5% 100VDC CER 0+-30	28480	0160-4788
A1C502	0160-4788	9		CAPACITOR-FXD 18PF +-5% 100VDC CER 0+-30	28480	0160-4788
A1C503	0160-3335	0	1	CAPACITOR-FXD 470PF +-10% 100VDC CER	28480	0160-3335
A1C505	0160-4832	4	5	CAPACITOR-FXD .01UF +-10% 100VDC CER	28480	0160-4832
A1C506	0180-1746	5	2	CAPACITOR-FXD 15UF+-10% 20VDC TA	56289	150D156X9020B2
A1C507	0160-4832	4		CAPACITOR-FXD .01UF +-10% 100VDC CER	28480	0160-4832
A1C509	0160-4835	7	5	CAPACITOR-FXD .1UF +-10% 50VDC CER	28480	0160-4835
A1C510	0180-1746	5		CAPACITOR-FXD 15UF+-10% 20VDC TA	56289	150D156X9020B2
A1C511	0160-4835	7		CAPACITOR-FXD .1UF +-10% 50VDC CER	28480	0160-4835
A1C512	0160-4805	1	1	CAPACITOR-FXD 47PF +-5% 100VDC CER 0+-30	28480	0160-4805
A1C513	0160-4835	7		CAPACITOR-FXD .1UF +-10% 50VDC CER	28480	0160-4835
A1C514	0180-0291	3	16	CAPACITOR-FXD 1UF+-10% 35VDC TA	56289	150D105X9035A2
A1C515	0160-4835	7		CAPACITOR-FXD .1UF +-10% 50VDC CER	28480	0160-4835
A1C516	0160-4825	5	1	CAPACITOR-FXD 560PF +-5% 100VDC CER	28480	0160-4825
A1C517	0160-4812	0		CAPACITOR-FXD 220PF +-5% 100VDC CER	28480	0160-4812
A1C550	0180-0291	3		CAPACITOR-FXD 1UF+-10% 35VDC TA	56289	150D105X9035A2
A1C552	0180-0291	3		CAPACITOR-FXD 1UF+-10% 35VDC TA	56289	150D105X9035A2
A1C553	0180-0291	3		CAPACITOR-FXD 1UF+-10% 35VDC TA	56289	150D105X9035A2
A1C572	0180-0309	4	1	CAPACITOR-FXD 4.7UF+-20% 10VDC TA	56289	150D475X0010A2
A1C574	0160-4571	8	34	CAPACITOR-FXD .1UF +80-20% 50VDC CER	28480	0160-4571
A1C575	0160-3847	9	18	CAPACITOR-FXD .01UF +100-0% 50VDC CER	28480	0160-3847
A1C576	0160-3847	9		CAPACITOR-FXD .01UF +100-0% 50VDC CER	28480	0160-3847
A1C577	0160-3847	9		CAPACITOR-FXD .01UF +100-0% 50VDC CER	28480	0160-3847
A1C578	0160-4571	8		CAPACITOR-FXD .1UF +80-20% 50VDC CER	28480	0160-4571
A1C579	0160-3847	9		CAPACITOR-FXD .01UF +100-0% 50VDC CER	28480	0160-3847
A1C580	0160-4571	8		CAPACITOR-FXD .1UF +80-20% 50VDC CER	28480	0160-4571
A1C581	0160-3847	9		CAPACITOR-FXD .01UF +100-0% 50VDC CER	28480	0160-3847
A1C582	0160-3847	9		CAPACITOR-FXD .01UF +100-0% 50VDC CER	28480	0160-3847
A1C583	0160-4835	7		CAPACITOR-FXD .1UF +-10% 50VDC CER	28480	0160-4835
A1C584	0160-3847	9		CAPACITOR-FXD .01UF +100-0% 50VDC CER	28480	0160-3847
A1C585	0160-3847	9		CAPACITOR-FXD .01UF +100-0% 50VDC CER	28480	0160-3847
A1C586	0160-4571	8		CAPACITOR-FXD .1UF +80-20% 50VDC CER	28480	0160-4571
A1C587	0160-3847	9		CAPACITOR-FXD .01UF +100-0% 50VDC CER	28480	0160-3847
A1C588	0160-4571	8		CAPACITOR-FXD .1UF +80-20% 50VDC CER	28480	0160-4571
A1C589	0160-4571	8		CAPACITOR-FXD .1UF +80-20% 50VDC CER	28480	0160-4571
A1C590	0160-3847	9		CAPACITOR-FXD .01UF +100-0% 50VDC CER	28480	0160-3847
A1C591	0160-3847	9		CAPACITOR-FXD .01UF +100-0% 50VDC CER	28480	0160-3847
A1C592	0160-4571	8		CAPACITOR-FXD .1UF +80-20% 50VDC CER	28480	0160-4571
A1C593	0160-4571	8		CAPACITOR-FXD .1UF +80-20% 50VDC CER	28480	0160-4571
A1C594	0160-3847	9		CAPACITOR-FXD .01UF +100-0% 50VDC CER	28480	0160-3847
A1C595	0160-4571	8		CAPACITOR-FXD .1UF +80-20% 50VDC CER	28480	0160-4571
A1C596	0160-3847	9		CAPACITOR-FXD .01UF +100-0% 50VDC CER	28480	0160-3847
A1C597	0160-3847	9		CAPACITOR-FXD .01UF +100-0% 50VDC CER	28480	0160-3847
A1C598	0160-4571	8		CAPACITOR-FXD .1UF +80-20% 50VDC CER	28480	0160-4571
A1C599	0160-4571	8		CAPACITOR-FXD .1UF +80-20% 50VDC CER	28480	0160-4571
A1C701	0160-4832	4		CAPACITOR-FXD .01UF +-10% 100VDC CER	28480	0160-4832
A1C702	0180-3446	6	1	CAPACITOR-FXD 3300UF+-20% 25VDC AL	00494	SM25VB3300MMC
A1C703	0160-4571	8		CAPACITOR-FXD .1UF +80-20% 50VDC CER	28480	0160-4571
A1C704	0180-0374	3	1	CAPACITOR-FXD 10UF+-10% 20VDC TA	56289	150D106X9020B2
A1C705	0160-4832	4		CAPACITOR-FXD .01UF +-10% 100VDC CER	28480	0160-4832
A1C706	0160-4832	4		CAPACITOR-FXD .01UF +-10% 100VDC CER	28480	0160-4832
A1CR500	1901-0050	3	37	DIODE-SWITCHING 80V 200MA 2NS DO-35	28480	1901-0050
A1CR501	1901-0050	3		DIODE-SWITCHING 80V 200MA 2NS DO-35	28480	1901-0050
A1CR502	1901-0050	3		DIODE-SWITCHING 80V 200MA 2NS DO-35	28480	1901-0050
A1CR503	1901-0050	3		DIODE-SWITCHING 80V 200MA 2NS DO-35	28480	1901-0050
A1CR504	1901-0050	3		DIODE-SWITCHING 80V 200MA 2NS DO-35	28480	1901-0050
A1CR505	1901-0518	8	4	DIODE-SM SIG SCHOTTKY	28480	1901-0518
A1CR506	1901-0050	3		DIODE-SWITCHING 80V 200MA 2NS DO-35	28480	1901-0050
A1CR507	1901-0050	3		DIODE-SWITCHING 80V 200MA 2NS DO-35	28480	1901-0050
A1CR508	1901-0050	3		DIODE-SWITCHING 80V 200MA 2NS DO-35	28480	1901-0050
A1CR509	1901-0050	3		DIODE-SWITCHING 80V 200MA 2NS DO-35	28480	1901-0050

See introduction to this section for ordering information

Table 6-2. Replaceable Parts (cont'd)

Reference Designation	HP Part Number	C D	Qty	Description	Mfr Code	Mfr Part Number
A1CR511	1901-0050	3		DIODE-SWITCHING 80V 200MA 2NS DO-35	28480	1901-0050
A1CR513	1901-0050	3		DIODE-SWITCHING 80V 200MA 2NS DO-35	28480	1901-0050
A1CR514	1901-0050	3		DIODE-SWITCHING 80V 200MA 2NS DO-35	28480	1901-0050
A1CR515	1901-0050	3		DIODE-SWITCHING 80V 200MA 2NS DO-35	28480	1901-0050
A1CR516	1901-0050	3		DIODE-SWITCHING 80V 200MA 2NS DO-35	28480	1901-0050
A1CR517	1901-0518	8		DIODE-SM SIG SCHOTTKY	28480	1901-0518
A1CR518	1901-0050	3		DIODE-SWITCHING 80V 200MA 2NS DO-35	28480	1901-0050
A1CR701	1901-0743	1	9	DIODE-PWR RECT 1N4004 400V 1A DO-41	01295	1N4004
A1CR702	1901-0743	1		DIODE-PWR RECT 1N4004 400V 1A DO-41	01295	1N4004
A1CR703	1902-0936	6	2	DIODE-ZNR 6V PD=5W IR=300UA	12969	TVS505
A1H701	03457-01201	8	1	0804 BRKT-HT SK	28480	03457-01201
A1J501	1251-8601	7	1	CONN-POST TYPE .100-PIN-SPCG 34-CONT	28480	1251-8601
A1J502	1251-7760	7	1	CONN-POST TYPE .100-PIN-SPCG 4-CONT	28480	1251-7760
A1J503	5180-8228	7	1	CONN-HPIB	28480	5180-8228
A1J701	1252-0239	3	1	CONN-POST TYPE 5.0-PIN-SPCG 8-CONT	03445	10-16-3081
A1J702	1252-0206	4	2	CONN-POST TYPE .100-PIN-SPCG 5-CONT	01417	640454-5
A1JM532	1251-5619	1	1	CONNECTOR 4-PIN M POST TYPE	28480	1251-5619
A1JM532A	1258-0141	8	2	JUMPER-REM	28480	1258-0141
A1JM533	1251-4682	6	1	CONNECTOR 3-PIN M POST TYPE	28480	1251-4682
A1JM533A	1258-0141	8		JUMPER-REM	28480	1258-0141
A1L701	9100-1788	6	4	CORE-FERRITE CHOKE-WIDEBAND; IMP:>680	28480	9100-1788
A1L702	9100-1788	6		CORE-FERRITE CHOKE-WIDEBAND; IMP:>680	28480	9100-1788
A1L703	9100-1788	6		CORE-FERRITE CHOKE-WIDEBAND; IMP:>680	28480	9100-1788
A1MP2	03457-43701	1	1	PUSHROD	28480	03457-43701
A1Q500	1854-0296	8	1	TRANSISTOR NPN SI TO-92 PD=310MW	28480	1854-0296
A1Q501	1854-0215	1	4	TRANSISTOR NPN SI PD=350MW FT=300MHZ	04713	2N3904
A1Q502	1853-0036	2	5	TRANSISTOR PNP SI PD=310MW FT=250MHZ	28480	1853-0036
A1Q503	1853-0036	2		TRANSISTOR PNP SI PD=310MW FT=250MHZ	28480	1853-0036
A1Q504	1854-0215	1		TRANSISTOR NPN SI PD=350MW FT=300MHZ	04713	2N3904
A1Q505	1854-0215	1		TRANSISTOR NPN SI PD=350MW FT=300MHZ	04713	2N3904
A1Q506	1853-0036	2		TRANSISTOR PNP SI PD=310MW FT=250MHZ	28480	1853-0036
A1R500	0698-3615	8	1	RESISTOR 47 5% 2W MO TC=0+-200	27167	FP42-2-T00-47R0-J
A1R501	0686-1515	8	1	RESISTOR 150 5% .5W CC TC=0+529	01121	EB1515
A1R502	0698-3359	7	1	RESISTOR 12.7K 1% .125W F TC=0+-100	24546	C4-1/8-T0-1272-F
A1R504	0757-0449	6	7	RESISTOR 20K 1% .125W F TC=0+-100	24546	C4-1/8-T0-2002-F
A1R506	0757-0445	2	1	RESISTOR 13K 1% .125W F TC=0+-100	24546	C4-1/8-T0-1302-F
A1R507	0698-4482	9	2	RESISTOR 17.4K 1% .125W F TC=0+-100	03888	PME55-1/8-T0-1742-F
A1R508	0757-0449	6		RESISTOR 20K 1% .125W F TC=0+-100	24546	C4-1/8-T0-2002-F
A1R509	0757-0438	3	10	RESISTOR 5.11K 1% .125W F TC=0+-100	24546	C4-1/8-T0-5111-F
A1R510	0757-0438	3		RESISTOR 5.11K 1% .125W F TC=0+-100	24546	C4-1/8-T0-5111-F
A1R513	0757-0273	4	3	RESISTOR 3.01K 1% .125W F TC=0+-100	24546	C4-1/8-T0-3011-F
A1R514	0757-0273	4		RESISTOR 3.01K 1% .125W F TC=0+-100	24546	C4-1/8-T0-3011-F
A1R515	0757-0280	3	12	RESISTOR 1K 1% .125W F TC=0+-100	24546	C4-1/8-T0-1001-F
A1R523	0757-0438	3		RESISTOR 5.11K 1% .125W F TC=0+-100	24546	C4-1/8-T0-5111-F
A1R525	0757-0280	3		RESISTOR 1K 1% .125W F TC=0+-100	24546	C4-1/8-T0-1001-F
A1R527	0757-0280	3		RESISTOR 1K 1% .125W F TC=0+-100	24546	C4-1/8-T0-1001-F
A1R530	0757-0465	6	10	RESISTOR 100K 1% .125W F TC=0+-100	24546	C4-1/8-T0-1003-F
A1R532	0698-6324	2	1	RESISTOR 187 1% .125W F TC=0+-100	24546	C4-1/8-T0-187R-F
A1R540	0757-0280	3		RESISTOR 1K 1% .125W F TC=0+-100	24546	C4-1/8-T0-1001-F
A1R545	0757-0442	9	19	RESISTOR 10K 1% .125W F TC=0+-100	24546	C4-1/8-T0-1002-F
A1R546	0757-0442	9		RESISTOR 10K 1% .125W F TC=0+-100	24546	C4-1/8-T0-1002-F
A1R547	0757-0442	9		RESISTOR 10K 1% .125W F TC=0+-100	24546	C4-1/8-T0-1002-F
A1R549	0757-0346	2	2	RESISTOR 10 1% .125W F TC=0+-100	24546	C4-1/8-T0-10R0-F
A1R550	0757-0465	6		RESISTOR 100K 1% .125W F TC=0+-100	24546	C4-1/8-T0-1003-F
A1R552	0757-0465	6		RESISTOR 100K 1% .125W F TC=0+-100	24546	C4-1/8-T0-1003-F
A1R553	0757-0465	6		RESISTOR 100K 1% .125W F TC=0+-100	24546	C4-1/8-T0-1003-F
A1R554	0757-0446	3	8	RESISTOR 15K 1% .125W F TC=0+-100	24546	C4-1/8-T0-1502-F
A1R555	0757-0442	9		RESISTOR 10K 1% .125W F TC=0+-100	24546	C4-1/8-T0-1002-F
A1R556	0757-0407	6	6	RESISTOR 200 1% .125W F TC=0+-100	24546	C4-1/8-T0-201-F
A1R557	0757-0407	6		RESISTOR 200 1% .125W F TC=0+-100	24546	C4-1/8-T0-201-F
A1R558	0757-0280	3		RESISTOR 1K 1% .125W F TC=0+-100	24546	C4-1/8-T0-1001-F

Table 6-2. Replaceable Parts (cont'd)

Reference Designation	HP Part Number	CD	Qty	Description	Mfr Code	Mfr Part Number
A1R559	0757-0280	3		RESISTOR 1K 1% .125W F TC=0+-100	24546	C4-1/8-T0-1001-F
A1R560	0757-0458	7	5	RESISTOR 51.1K 1% .125W F TC=0+-100	24546	C4-1/8-T0-5112-F
A1R561	0757-0442	9		RESISTOR 10K 1% .125W F TC=0+-100	24546	C4-1/8-T0-1002-F
A1R562	0757-0442	9		RESISTOR 10K 1% .125W F TC=0+-100	24546	C4-1/8-T0-1002-F
A1R563	0698-4482	9		RESISTOR 17.4K 1% .125W F TC=0+-100	03888	PME55-1/8-T0-1742-F
A1R564	0757-0438	3		RESISTOR 5.11K 1% .125W F TC=0+-100	24546	C4-1/8-T0-5111-F
A1R565	0757-0290	5	1	RESISTOR 6.19K 1% .125W F TC=0+-100	19701	MF4C1/8-T0-6191-F
A1R566	0757-0273	4		RESISTOR 3.01K 1% .125W F TC=0+-100	24546	C4-1/8-T0-3011-F
A1R567	0757-0280	3		RESISTOR 1K 1% .125W F TC=0+-100	24546	C4-1/8-T0-1001-F
A1R568	0757-0438	3		RESISTOR 5.11K 1% .125W F TC=0+-100	24546	C4-1/8-T0-5111-F
A1R569	0757-0407	6		RESISTOR 200 1% .125W F TC=0+-100	24546	C4-1/8-T0-201-F
A1RP503	1810-0560	7	1	NETWORK-RES 16-DIP5.6K OHM X 8	28480	1810-0560
A1RP516	1810-0286	4	3	NETWORK-RES 16-DIP10.0K OHM X 15	01121	316A103
A1RP525	1810-0286	4		NETWORK-RES 16-DIP10.0K OHM X 15	01121	316A103
A1RP533	1810-0124	9	1	NETWORK-RES 16-DIP200.0 OHM X 8	28480	1810-0124
A1RP534	1810-0286	4		NETWORK-RES 16-DIP10.0K OHM X 15	01121	316A103
A1RT500	0837-0220	1	1	THERMISTOR ROD 10K-OHM TC=-3.83%/C-DEG	28480	0837-0220
A1S701	3101-2252	7	1	SWITCH-PB DPDT ALTNG 4A 250VAC	28480	3101-2252
A1S702	3101-2769	1	2	SWITCH-SL DPDT ST 5A 250VAC PC	05963	4021-4722
A1S703	3101-2769	1		SWITCH-SL DPDT ST 5A 250VAC PC	05963	4021-4722
A1SP501	0960-0561	4	1	AUDIO TRANSDUCER 1-3VDC; 850b AT 1.5V	28480	0960-0561
A1U501	1820-2624	9	1	IC-MPU; CLK FREQ=2MHZ, ENHANCED 6800	28480	1820-2624
A1U502	03457-88803	8	1	IC-MEMORY	28480	03457-88803
A1U503	1818-3430	2	1	IC NMOS 65536 (64K) ROM 200-NS 3-S	06383	TMM2365P(MASKED)
A1U504	1820-1872	7	2	IC BFR TTL LS INV OCTL 2-INP	27014	DM81LS96N
A1U505	1820-3662	7	1	IC-DC TO 4MHZ 6402 UART	03801	HD1-6402-B3409
A1U506	1818-1611	7	1	IC CMOS 16384 (16K) STAT RAM 150-NS 3-S	54013	HM6116P-3
A1U507	1820-2549	7	1	IC-8291A P HPIB	28480	1820-2549
A1U508	1LH4-0001	4	1	IC-HPIB XCVR	28480	1LH4-0001
A1U509	1820-2216	5	2	IC FF CMOS D-TYPE POS-EDGE-TRIG OCTL	27014	MM74C374N
A1U510	1820-2216	5		IC FF CMOS D-TYPE POS-EDGE-TRIG OCTL	27014	MM74C374N
A1U511	1818-3429	9	1	IC CMOS 16384 (16K) STAT RAM 200-NS 3-S	06383	TC5517APL-2(SEL)
A1U512	1820-1216	3	2	IC DCDR TTL LS 3-TO-8-LINE 3-INP	01295	SN74LS138N
A1U513	1820-1216	3		IC DCDR TTL LS 3-TO-8-LINE 3-INP	01295	SN74LS138N
A1U514	1820-3197	3	1	IC CNTR CMOS/74HC BIN ASYNCHRO	02041	MC74HC402GN
A1U515	1820-3208	7	1	IC CNTR CMOS/74HC BIN ASYNCHRO	28480	1820-3208
A1U516	1820-3173	5	2	IC FF CMOS/74HC J-K NEG-EDGE-TRIG	28480	1820-3173
A1U517	1820-1872	7		IC BFR TTL LS INV OCTL 2-INP	27014	DM81LS96N
A1U519	1826-0138	8	3	IC COMPARATOR GP QUAD 14-DIP-P PKG	01295	LM339N
A1U591	1820-2924	2	3	IC GATE CMOS/74HC NOR QUAD 2-INP	28480	1820-2924
A1U592	1820-3173	5		IC FF CMOS/74HC J-K NEG-EDGE-TRIG	28480	1820-3173
A1U593	1820-2922	0	3	IC GATE CMOS/74HC NAND QUAD 2-INP	28480	1820-2922
A1U594	1820-3097	2	1	IC GATE CMOS AND QUAD 2-INP	28480	1820-3097
A1U595	1820-2922	0		IC GATE CMOS/74HC NAND QUAD 2-INP	28480	1820-2922
A1U596	1820-1203	8	1	IC GATE TTL LS AND TPL 3-INP	01295	SN74LS11N
A1U597	1820-2924	2		IC GATE CMOS/74HC NOR QUAD 2-INP	28480	1820-2924
A1U598	1820-2922	0		IC GATE CMOS/74HC NAND QUAD 2-INP	28480	1820-2922
A1U599	1820-1199	1	1	IC INV TTL LS HEX 1-INP	01295	SN74LS04N
A1U701	1826-0551	9	2	IC 340A V RGLTR TO-220	01295	TL7805ACKC
A1XS02	1200-0861	8	1	SOCKET-IC 28-CONT DIP DIP-SLDR	28480	1200-0861
A1Y500	0410-1553	1	1	CRYSTAL-QUARTZ 8.000 MHZ HC-49/U-HLDR	05033	MSC-1286
A2	03457-66502	8	1	PC ASSY-ANALOG	28480	03457-66502
A2A1	03456-66525	4	1	NATL REF ASSY	28480	03456-66525
A2C101	0160-4479	5	3	CAPACITOR-FXD 220PF +-10% 160VDC POLYP	28480	0160-4479
A2C111	0160-4804	0	1	CAPACITOR-FXD 58PF +-5% 100VDC CER 0+-30	28480	0160-4804
A2C112	0160-4532	1	4	CAPACITOR-FXD 1000PF +-20% 50VDC CER	28480	0160-4532
A2C113	0160-4571	8		CAPACITOR-FXD .1UF +80-20% 50VDC CER	28480	0160-4571
A2C114	0160-4571	8		CAPACITOR-FXD .1UF +80-20% 50VDC CER	28480	0160-4571

Table 6-2. Replaceable Parts (cont'd)

Reference Designation	HP Part Number	CD	Qty	Description	Mfr Code	Mfr Part Number
A2C117	0160-4571	8		CAPACITOR-FXD .1UF +80-20% 50VDC CER	28480	0160-4571
A2C118	0180-0229	7	3	CAPACITOR-FXD 33UF+-10% 10VDC TA	56289	150D336X9010B2
A2C119	0180-0291	3		CAPACITOR-FXD 1UF+-10% 35VDC TA	56289	150D105X9035A2
A2C121	0180-0229	7		CAPACITOR-FXD 33UF+-10% 10VDC TA	56289	150D336X9010B2
A2C122	0160-4571	8		CAPACITOR-FXD .1UF +80-20% 50VDC CER	28480	0160-4571
A2C123	0160-4532	1		CAPACITOR-FXD 1000PF +-20% 50VDC CER	28480	0160-4532
A2C201	0160-4479	5		CAPACITOR-FXD 220PF +-10% 160VDC POLYP	28480	0160-4479
A2C202	0160-4479	5		CAPACITOR-FXD 220PF +-10% 160VDC POLYP	28480	0160-4479
A2C203	0160-6267	3	2	CAPACITOR-FXD 100PF +-5% 200VDC CER	05704	R3769
A2C204	0160-4461	5	2	CAPACITOR-FXD 150PF +-2.5% 160VDC POLYP	28480	0160-4461
A2C211	0160-4532	1		CAPACITOR-FXD 1000PF +-20% 50VDC CER	28480	0160-4532
A2C212	0160-4571	8		CAPACITOR-FXD .1UF +80-20% 50VDC CER	28480	0160-4571
A2C213	0160-4571	8		CAPACITOR-FXD .1UF +80-20% 50VDC CER	28480	0160-4571
A2C214	0160-5349	0	1	CAPACITOR-FXD 200PF +-5% 100VDC CER	28480	0160-5349
A2C401	0160-4791	4	6	CAPACITOR-FXD 10PF +-5% 100VDC CER 0+-30	28480	0160-4791
A2C402	0160-6267	3		CAPACITOR-FXD 100PF +-5% 200VDC CER	05704	R3769
A2C403	0160-4571	8		CAPACITOR-FXD .1UF +80-20% 50VDC CER	28480	0160-4571
A2C501	0160-4571	8		CAPACITOR-FXD .1UF +80-20% 50VDC CER	28480	0160-4571
A2C502	0160-4571	8		CAPACITOR-FXD .1UF +80-20% 50VDC CER	28480	0160-4571
A2C503	0160-4571	8		CAPACITOR-FXD .1UF +80-20% 50VDC CER	28480	0160-4571
A2C504	0160-4571	8		CAPACITOR-FXD .1UF +80-20% 50VDC CER	28480	0160-4571
A2C505	0160-4571	8		CAPACITOR-FXD .1UF +80-20% 50VDC CER	28480	0160-4571
A2C506	0160-4571	8		CAPACITOR-FXD .1UF +80-20% 50VDC CER	28480	0160-4571
A2C511	0160-4438	6	1	CAPACITOR-FXD 470PF +-2.5% 160VDC POLYP	28480	0160-4438
A2C512	0160-6208	2	1	CAPACITOR-FXD .1UF +-10% 50VDC MET-POLYC	10214	ECR-7767K
A2C513	0160-4571	8		CAPACITOR-FXD .1UF +80-20% 50VDC CER	28480	0160-4571
A2C514	0160-4571	8		CAPACITOR-FXD .1UF +80-20% 50VDC CER	28480	0160-4571
A2C515	0160-4571	8		CAPACITOR-FXD .1UF +80-20% 50VDC CER	28480	0160-4571
A2C516	0160-4461	5		CAPACITOR-FXD 150PF +-2.5% 160VDC POLYP	28480	0160-4461
A2C517	0160-4571	8		CAPACITOR-FXD .1UF +80-20% 50VDC CER	28480	0160-4571
A2C521	0180-0291	3		CAPACITOR-FXD 1UF+-10% 35VDC TA	56289	150D105X9035A2
A2C522	0160-4571	8		CAPACITOR-FXD .1UF +80-20% 50VDC CER	28480	0160-4571
A2C523	0180-0291	3		CAPACITOR-FXD 1UF+-10% 35VDC TA	56289	150D105X9035A2
A2C524	0160-4571	8		CAPACITOR-FXD .1UF +80-20% 50VDC CER	28480	0160-4571
A2C525	0180-0291	3		CAPACITOR-FXD 1UF+-10% 35VDC TA	56289	150D105X9035A2
A2C526	0160-4791	4		CAPACITOR-FXD 10PF +-5% 100VDC CER 0+-30	28480	0160-4791
A2C531	0160-3847	9		CAPACITOR-FXD .01UF +100-0% 50VDC CER	28480	0160-3847
A2C901	0180-3447	7	1	CAPACITOR-FXD 1000UF+-20% 25VDC AL	00494	SM25VB1000MMC
A2C902	0180-0291	3		CAPACITOR-FXD 1UF+-10% 35VDC TA	56289	150D105X9035A2
A2C910	0160-5755	2	1	CAPACITOR-FXD .1UF +-10% 100VDC CER	28480	0160-5755
A2C911	0180-2986	7	2	CAPACITOR-FXD 330UF+-20% 50VDC AL	28480	0180-2986
A2C912	0180-0291	3		CAPACITOR-FXD 1UF+-10% 35VDC TA	56289	150D105X9035A2
A2C921	0180-2986	7		CAPACITOR-FXD 330UF+-20% 50VDC AL	28480	0180-2986
A2C922	0180-0291	3		CAPACITOR-FXD 1UF+-10% 35VDC TA	56289	150D105X9035A2
A2CR111	1901-0376	6	6	DIODE-GEN PRP 35V 50MA DO-35	28480	1901-0376
A2CR112	1901-0376	6		DIODE-GEN PRP 35V 50MA DO-35	28480	1901-0376
A2CR113	1901-0050	3		DIODE-SWITCHING 80V 200MA 2NS DO-35	28480	1901-0050
A2CR114	1901-0050	3		DIODE-SWITCHING 80V 200MA 2NS DO-35	28480	1901-0050
A2CR118	1902-0952	6	15	DIODE-ZNR 5.6V 5% DO-35 PD=.4W TC=+.046%	28480	1902-0952
A2CR119	1901-0050	3		DIODE-SWITCHING 80V 200MA 2NS DO-35	28480	1901-0050
A2CR121	1902-0952	6		DIODE-ZNR 5.6V 5% DO-35 PD=.4W TC=+.046%	28480	1902-0952
A2CR122	1902-0952	6		DIODE-ZNR 5.6V 5% DO-35 PD=.4W TC=+.046%	28480	1902-0952
A2CR123	1902-0952	6		DIODE-ZNR 5.6V 5% DO-35 PD=.4W TC=+.046%	28480	1902-0952
A2CR124	1902-0952	6		DIODE-ZNR 5.6V 5% DO-35 PD=.4W TC=+.046%	28480	1902-0952
A2CR125	1902-0952	6		DIODE-ZNR 5.6V 5% DO-35 PD=.4W TC=+.046%	28480	1902-0952
A2CR126	1902-0952	6		DIODE-ZNR 5.6V 5% DO-35 PD=.4W TC=+.046%	28480	1902-0952
A2CR127	1902-0952	6		DIODE-ZNR 5.6V 5% DO-35 PD=.4W TC=+.046%	28480	1902-0952
A2CR128	1902-0952	6		DIODE-ZNR 5.6V 5% DO-35 PD=.4W TC=+.046%	28480	1902-0952
A2CR129	1902-0952	6		DIODE-ZNR 5.6V 5% DO-35 PD=.4W TC=+.046%	28480	1902-0952
A2CR130	1902-0952	6		DIODE-ZNR 5.6V 5% DO-35 PD=.4W TC=+.046%	28480	1902-0952
A2CR131	1902-0952	6		DIODE-ZNR 5.6V 5% DO-35 PD=.4W TC=+.046%	28480	1902-0952
A2CR132	1902-0952	6		DIODE-ZNR 5.6V 5% DO-35 PD=.4W TC=+.046%	28480	1902-0952
A2CR133	1902-0952	6		DIODE-ZNR 5.6V 5% DO-35 PD=.4W TC=+.046%	28480	1902-0952
A2CR134	1902-0952	6		DIODE-ZNR 5.6V 5% DO-35 PD=.4W TC=+.046%	28480	1902-0952

See introduction to this section for ordering information

Table 6-2. Replaceable Parts (cont'd)

Reference Designation	HP Part Number	CD	Qty	Description	Mfr Code	Mfr Part Number
A2CR135	1901-0050	3		DIODE-SWITCHING 80V 200MA 2NS DO-35	28480	1901-0050
A2CR136	1901-0050	3		DIODE-SWITCHING 80V 200MA 2NS DO-35	28480	1901-0050
A2CR137	1901-0050	3		DIODE-SWITCHING 80V 200MA 2NS DO-35	28480	1901-0050
A2CR201	1901-0849	8	1	DIODE-PWR RECT 1N4007 1KV 1A DO-41	14936	1N4007
A2CR202	1902-0962	8	1	DIODE-ZNR 15V 5% DO-35 PD=.4W TC=+.087%	28480	1902-0962
A2CR401	1901-0838	5	4	DIODE-PWR RECT 1N5393 200V 1.5A	3L585	1N5393
A2CR402	1901-0838	5		DIODE-PWR RECT 1N5393 200V 1.5A	3L585	1N5393
A2CR403	1901-0838	5		DIODE-PWR RECT 1N5393 200V 1.5A	3L585	1N5393
A2CR404	1901-0838	5		DIODE-PWR RECT 1N5393 200V 1.5A	3L585	1N5393
A2CR511	1901-0040	1	4	DIODE-SWITCHING 30V 50MA 2NS DO-35	28480	1901-0040
A2CR512	1901-0040	1		DIODE-SWITCHING 30V 50MA 2NS DO-35	28480	1901-0040
A2CR513	1901-0040	1		DIODE-SWITCHING 30V 50MA 2NS DO-35	28480	1901-0040
A2CR514	1901-0040	1		DIODE-SWITCHING 30V 50MA 2NS DO-35	28480	1901-0040
A2CR531	1902-0958	2	1	DIODE-ZNR 10V 5% DO-35 PD=.4W TC=+.075%	28480	1902-0958
A2CR532	1901-0050	3		DIODE-SWITCHING 80V 200MA 2NS DO-35	28480	1901-0050
A2CR901	1901-0743	1		DIODE-PWR RECT 1N4004 400V 1A DO-41	01295	1N4004
A2CR902	1901-0743	1		DIODE-PWR RECT 1N4004 400V 1A DO-41	01295	1N4004
A2CR903	1902-0936	6		DIODE-ZNR 6V PD=5W IR=300UA	12969	TVS505
A2CR904	1901-0743	1		DIODE-PWR RECT 1N4004 400V 1A DO-41	01295	1N4004
A2CR911	1901-0743	1		DIODE-PWR RECT 1N4004 400V 1A DO-41	01295	1N4004
A2CR912	1901-0743	1		DIODE-PWR RECT 1N4004 400V 1A DO-41	01295	1N4004
A2CR913	1902-1000	7	2	DIODE-ZNR 1N5366B 39V 5% PD=5W IR=500NA	04713	1N5366B
A2CR914	1902-0632	9	2	DIODE-ZNR 1N5354B 17V 5% PD=5W TC=+75%	04713	1N5354B
A2CR921	1901-0743	1		DIODE-PWR RECT 1N4004 400V 1A DO-41	01295	1N4004
A2CR922	1901-0743	1		DIODE-PWR RECT 1N4004 400V 1A DO-41	01295	1N4004
A2CR923	1902-1000	7		DIODE-ZNR 1N5366B 39V 5% PD=5W IR=500NA	04713	1N5366B
A2CR924	1902-0632	9		DIODE-ZNR 1N5354B 17V 5% PD=5W TC=+75%	04713	1N5354B
A2E101	1970-0100	9	1	SURGE V PTCTR	28480	1970-0100
A2E401	1970-0052	0	2	TUBE-ELECTRON SURGE V PTCTR	28480	1970-0052
A2F101	2110-0043	8	2	FUSE 1.5A 250V NTD 1.25X.25 UL	28480	2110-0043
A2H911	1205-0318	0	1	HEAT SINK SGL TO-220-CS	28480	1205-0318
A2H921	1205-0355	5	1	HEAT SINK SGL TO-220-CS	13103	6043PB
A2J101	1251-0600	0	12	CONNECTOR-SGL CONT PIN 1.14-MM-BSC-SZ SQ	28480	1251-0600
A2J102	1251-0600	0		CONNECTOR-SGL CONT PIN 1.14-MM-BSC-SZ SQ	28480	1251-0600
A2J103	1251-0600	0		CONNECTOR-SGL CONT PIN 1.14-MM-BSC-SZ SQ	28480	1251-0600
A2J104	1251-0600	0		CONNECTOR-SGL CONT PIN 1.14-MM-BSC-SZ SQ	28480	1251-0600
A2J105	1251-0600	0		CONNECTOR-SGL CONT PIN 1.14-MM-BSC-SZ SQ	28480	1251-0600
A2J106	1251-0600	0		CONNECTOR-SGL CONT PIN 1.14-MM-BSC-SZ SQ	28480	1251-0600
A2J107	1251-0600	0		CONNECTOR-SGL CONT PIN 1.14-MM-BSC-SZ SQ	28480	1251-0600
A2J108	1251-0600	0		CONNECTOR-SGL CONT PIN 1.14-MM-BSC-SZ SQ	28480	1251-0600
A2J109	1251-0600	0		CONNECTOR-SGL CONT PIN 1.14-MM-BSC-SZ SQ	28480	1251-0600
A2J110	1251-0600	0		CONNECTOR-SGL CONT PIN 1.14-MM-BSC-SZ SQ	28480	1251-0600
A2J301	1251-0600	0		CONNECTOR-SGL CONT PIN 1.14-MM-BSC-SZ SQ	28480	1251-0600
A2J302	1251-0600	0		CONNECTOR-SGL CONT PIN 1.14-MM-BSC-SZ SQ	28480	1251-0600
A2J303	1251-8106	7	2	CONN-POST TYPE .100-PIN-SPCG 20-CONT	28480	1251-8106
A2J501	1251-8106	7		CONN-POST TYPE .100-PIN-SPCG 20-CONT	28480	1251-8106
A2J502	1251-6515	8	1	CONNECTOR 6-PIN M POST TYPE	28480	1251-6515
A2J503	1251-6064	2	1	CONNECTOR 5-PIN M POST TYPE	28480	1251-6064
A2J504	1251-6191	6	1	CONNECTOR 4-PIN M POST TYPE	28480	1251-6191
A2J901	1252-0206	4		CONN-POST TYPE .100-PIN-SPCG 5-CONT	01417	640454-5
A2K101	0490-1337	7	4	RELAY-S4EB-L2-5V	28480	0490-1337
A2K102	0490-1337	7		RELAY-S4EB-L2-5V	28480	0490-1337
A2K103	0490-1337	7		RELAY-S4EB-L2-5V	28480	0490-1337
A2K104	0490-1337	7		RELAY-S4EB-L2-5V	28480	0490-1337
A2K106	5180-8233	4	1	RELAY-REED, 10V	28480	5180-8233
A2K107	5180-8234	5	4	RELAY-REED, 10UV	28480	5180-8234
A2K201	5180-8234	5		RELAY-REED, 10UV	28480	5180-8234
A2K301	5180-8234	5		RELAY-REED, 10UV	28480	5180-8234
A2K302	5180-8234	5		RELAY-REED, 10UV	28480	5180-8234
A2K401	0490-1450	5	3	RELAY 2C 5VDC COIL 2A 250VAC	01852	DS2E-SL2-DC5V-C-H83
A2K402	0490-1450	5		RELAY 2C 5VDC-COIL 2A 250VAC	01852	DS2E-SL2-DC5V-C-H83
A2K403	0490-1450	5		RELAY 2C 5VDC-COIL 2A 250VAC	01952	DS2E-SL2-DC5V-C-H83

See introduction to this section for ordering information

Table 6-2. Replaceable Parts (cont'd)

Reference Designation	HP Part Number	CD	Qty	Description	Mfr Code	Mfr Part Number
A2L201	9100-1666	9	1	INDUCTOR RF-CH-MLD 3.6MH 5% .230X.57LG	28480	9100-1666
A2L401	9140-0478	3	1	INDUCTOR RF-CH-MLD 1UH 10% .164DX.45LG	28480	9140-0478
A2L501	9100-1788	6		CORE-FERRITE CHOKE-WIDEBAND; IMP:>680	28480	9100-1788
A2Q111	1855-0248	0	2	TRANSISTOR-JFET DUAL N-CHAN D-MODE TO-71	28480	1855-0246
A2Q112	1855-0247	1	1	TRANSISTOR-JFET DUAL N-CHAN D-MODE TO-71	28480	1855-0247
A2Q113	1853-0086	2	1	TRANSISTOR PNP SI PD=310MW FT=40MHZ	27014	2N5087
A2Q114	1854-0392	5	1	TRANSISTOR NPN SI PD=310MW FT=50MHZ	04713	2N5088
A2Q118	1855-0567	8	2	TRANSISTOR MOSFET P-CHAN E-MODE SI	28480	1855-0567
A2Q119	1855-0550	9	1	TRANSISTOR MOSFET P-CHAN E-MODE SI	02886	V10938
A2Q121	1855-0567	8		TRANSISTOR MOSFET P-CHAN E-MODE SI	28480	1855-0567
A2Q211	1855-0425	7	2	TRANSISTOR J-FET N-CHAN D-MODE TO-92	22229	J304
A2Q212	1855-0305	2	2	TRANSISTOR J-FET 2N4117A N-CHAN D-MODE	17856	2N4117A
A2Q213	1853-0510	7	4	TRANSISTOR-2N6520 (SELECTED)	28480	1853-0510
A2Q214	1853-0510	7		TRANSISTOR-2N6520 (SELECTED)	28480	1853-0510
A2Q215	1853-0510	7		TRANSISTOR-2N6520 (SELECTED)	28480	1853-0510
A2Q216	1853-0510	7		TRANSISTOR-2N6520 (SELECTED)	28480	1853-0510
A2Q217	1855-0305	2		TRANSISTOR J-FET 2N4117A N-CHAN D-MODE	17856	2N4117A
A2Q501	1853-0036	2		TRANSISTOR PNP SI PD=310MW FT=250MHZ	28480	1853-0036
A2Q511	1855-0410	0	2	TRANSISTOR J-FET N-CHAN D-MODE TO-18 SI	28480	1855-0410
A2Q512	1855-0425	7		TRANSISTOR J-FET N-CHAN D-MODE TO-92	22229	J304
A2Q513	1855-0243	7	1	TRANSISTOR-JFET DUAL N-CHAN TO-71 SI	28480	1855-0243
A2Q514	1855-0246	0		TRANSISTOR-JFET DUAL N-CHAN D-MODE TO-71	28480	1855-0246
A2Q515	1855-0410	0		TRANSISTOR J-FET N-CHAN D-MODE TO-18 SI	28480	1855-0410
A2Q522	1853-0036	2		TRANSISTOR PNP SI PD=310MW FT=250MHZ	28480	1853-0036
A2R101	0686-5135	6	6	RESISTOR 51K 5% .5W CC TC=0+765	01121	EB5135
A2R102	0686-5135	6		RESISTOR 51K 5% .5W CC TC=0+765	01121	EB5135
A2R103	0698-8777	3	6	RESISTOR 1K 5% .25W CC TC=-400/+900	28480	0698-8777
A2R104	0683-1055	5	5	RESISTOR 1M 5% .25W FC TC=-800/+900	01121	CB1055
A2R111	0699-0642	7	2	RESISTOR 10K .1% .1W F TC=0+-5	28480	0699-0642
A2R112	0699-0642	7		RESISTOR 10K .1% .1W F TC=0+-5	28480	0699-0642
A2R113	2100-3383	4	1	RESISTOR-TRMR 50 10% C TOP-ADJ 1-TRN	28480	2100-3383
A2R114	0757-0438	3		RESISTOR 5.11K 1% .125W F TC=0+-100	24546	C4-1/8-T0-5111-F
A2R115	0757-0449	6		RESISTOR 20K 1% .125W F TC=0+-100	24546	C4-1/8-T0-2002-F
A2R116	0757-0465	6		RESISTOR 100K 1% .125W F TC=0+-100	24546	C4-1/8-T0-1003-F
A2R117	0757-0465	6		RESISTOR 100K 1% .125W F TC=0+-100	24546	C4-1/8-T0-1003-F
A2R118	0757-0453	2	4	RESISTOR 30.1K 1% .125W F TC=0+-100	24546	C4-1/8-T0-3012-F
A2R119	0683-1055	5		RESISTOR 1M 5% .25W FC TC=-800/+900	01121	CB1055
A2R121	0757-0401	0	5	RESISTOR 100 1% .125W F TC=0+-100	24546	C4-1/8-T0-101-F
A2R122	0757-0410	1	3	RESISTOR 301 1% .125W F TC=0+-100	24546	C4-1/8-T0-301R-F
A2R123	0757-0283	6	3	RESISTOR 2K 1% .125W F TC=0+-100	24546	C4-1/8-T0-2001-F
A2R201	0686-5135	6		RESISTOR 51K 5% .5W CC TC=0+765	01121	EB5135
A2R202	0686-5135	6		RESISTOR 51K 5% .5W CC TC=0+765	01121	EB5135
A2R203	0686-5135	6		RESISTOR 51K 5% .5W CC TC=0+765	01121	EB5135
A2R204	0686-5135	6		RESISTOR 51K 5% .5W CC TC=0+765	01121	EB5135
A2R205	0757-0435	0	1	RESISTOR 3.92K 1% .125W F TC=0+-100	24546	C4-1/8-T0-3921-F
A2R206	8159-0005	0	5	RESISTOR-ZERO OHMS 22 AWG LEAD DIA	28480	8159-0005
A2R211	0699-1125	3	1	RESISTOR 40K .1% .6W F TC=0+-4.2	02932	301031
A2R212	0757-0442	9		RESISTOR 10K 1% .125W F TC=0+-100	24546	C4-1/8-T0-1002-F
A2R213	0757-0474	7	2	RESISTOR 243K 1% .125W F TC=0+-100	24546	C4-1/8-T0-2433-F
A2R214	0757-0474	7		RESISTOR 243K 1% .125W F TC=0+-100	24546	C4-1/8-T0-2433-F
A2R215	0757-0442	9		RESISTOR 10K 1% .125W F TC=0+-100	24546	C4-1/8-T0-1002-F
A2R216	0683-5145	2	2	RESISTOR 510K 5% .25W FC TC=-800/+900	01121	CB5145
A2R217	0683-5145	2		RESISTOR 510K 5% .25W FC TC=-800/+900	01121	CB5145
A2R218	0757-0442	9		RESISTOR 10K 1% .125W F TC=0+-100	24546	C4-1/8-T0-1002-F
A2R221	0698-7652	1	1	RESISTOR 49.9K 1% .125W F TC=0+-25	19701	MF4C1/8-T9-4992-F
A2R222	0698-7082	1	2	RESISTOR 100K 1% .125W F TC=0+-25	28480	0698-7082
A2R223	0698-7082	1		RESISTOR 100K 1% .125W F TC=0+-25	28480	0698-7082
A2R301	0757-0280	3		RESISTOR 1K 1% .125W F TC=0+-100	24546	C4-1/8-T0-1001-F
A2R302	0757-0288	1	1	RESISTOR 9.09K 1% .125W F TC=0+-100	19701	MF4C1/8-T0-9091-F
A2R401	0699-1514	4	1	RESISTOR .1 1% 5W F TC=0+-50	01863	L0-5-.1-1-RP
A2R402	0811-3709	3	1	RESISTOR 1 1% 3W PW TC=0+-50	05525	RS2B-227
A2R403	0699-1627	0	1	RESISTOR 9 .1% .125W TC=0+-10	06952	CM60-T13
A2R404	0699-1626	1	1	RESISTOR 90 .1% .125W F TC=0+-10	06952	CM60-T13
A2R405	0699-1629	2	2	RESISTOR 900 .1% .125W F TC=0+-10	06952	CM60-T13

See introduction to this section for ordering information

Table 6-2. Replaceable Parts (cont'd)

Reference Designation	HP Part Number	C D	Qty	Description	Mfr Code	Mfr Part Number
A2R408	0699-1065	0	1	RESISTOR 10K 5% .25W CC TC=-400/+700	28480	0699-1065
A2R500	0698-8737	5	1	RESISTOR 100K 5% .25W CC TC=-400/+800	28480	0698-8737
A2R501	0698-4406	7	2	RESISTOR 115 1% .125W F TC=0+-100	24546	C4-1/8-T0-115R-F
A2R502	0757-0438	3		RESISTOR 5.11K 1% .125W F TC=0+-100	24546	C4-1/8-T0-5111-F
A2R503	0757-0442	9		RESISTOR 10K 1% .125W F TC=0+-100	24546	C4-1/8-T0-1002-F
A2R504	0757-0401	0		RESISTOR 100 1% .125W F TC=0+-100	24546	C4-1/8-T0-101-F
A2R504A	9170-0894	0	2	CORE-SHIELDING BEAD	28480	9170-0894
A2R504B	9170-0894	0		CORE-SHIELDING BEAD	28480	9170-0894
A2R505	0757-0465	6		RESISTOR 100K 1% .125W F TC=0+-100	24546	C4-1/8-T0-1003-F
A2R506	0698-8777	3		RESISTOR 1K 5% .25W CC TC=-400/+900	28480	0698-8777
A2R507	0757-0394	0	2	RESISTOR 51.1 1% .125W F TC=0+-100	24546	C4-1/8-T0-51R1-F
A2R508	0698-4406	7		RESISTOR 115 1% .125W F TC=0+-100	24546	C4-1/8-T0-115R-F
A2R511	0698-4411	4	1	RESISTOR 140 1% .125W F TC=0+-100	24546	C4-1/8-T0-140R-F
A2R513	0757-0438	3		RESISTOR 5.11K 1% .125W F TC=0+-100	24546	C4-1/8-T0-5111-F
A2R514	0757-0401	0		RESISTOR 100 1% .125W F TC=0+-100	24546	C4-1/8-T0-101-F
A2R515	0757-0465	6		RESISTOR 100K 1% .125W F TC=0+-100	24546	C4-1/8-T0-1003-F
A2R516	0757-0274	5	1	RESISTOR 1.21K 1% .125W F TC=0+-100	24546	C4-1/8-T0-1211-F
A2R517	0757-0442	9		RESISTOR 10K 1% .125W F TC=0+-100	24546	C4-1/8-T0-1002-F
A2R518	0757-0442	9		RESISTOR 10K 1% .125W F TC=0+-100	24546	C4-1/8-T0-1002-F
A2R519	0757-0464	5	1	RESISTOR 90.9K 1% .125W F TC=0+-100	24546	C4-1/8-T0-9092-F
A2R520	0757-0442	9		RESISTOR 10K 1% .125W F TC=0+-100	24546	C4-1/8-T0-1002-F
A2R521	0757-0449	6		RESISTOR 20K 1% .125W F TC=0+-100	24546	C4-1/8-T0-2002-F
A2R523	0757-0442	9		RESISTOR 10K 1% .125W F TC=0+-100	24546	C4-1/8-T0-1002-F
A2R524	0757-0465	6		RESISTOR 100K 1% .125W F TC=0+-100	24546	C4-1/8-T0-1003-F
A2R526	0757-0458	7		RESISTOR 51.1K 1% .125W F TC=0+-100	24546	C4-1/8-T0-5112-F
A2R527	0757-0283	6		RESISTOR 2K 1% .125W F TC=0+-100	24546	C4-1/8-T0-2001-F
A2R528	0757-0458	7		RESISTOR 51.1K 1% .125W F TC=0+-100	24546	C4-1/8-T0-5112-F
A2R529	0757-0458	7		RESISTOR 51.1K 1% .125W F TC=0+-100	24546	C4-1/8-T0-5112-F
A2R531	0757-0410	1		RESISTOR 301 1% .125W F TC=0+-100	24546	C4-1/8-T0-301R-F
A2R532	0757-0438	3		RESISTOR 5.11K 1% .125W F TC=0+-100	24546	C4-1/8-T0-5111-F
A2R533	0757-0394	0		RESISTOR 51.1 1% .125W F TC=0+-100	24546	C4-1/8-T0-51R1-F
A2R534	0757-0433	8	1	RESISTOR 3.32K 1% .125W F TC=0+-100	24546	C4-1/8-T0-3321-F
A2R535	0757-0458	7		RESISTOR 51.1K 1% .125W F TC=0+-100	24546	C4-1/8-T0-5112-F
A2R536	0757-0283	6		RESISTOR 2K 1% .125W F TC=0+-100	24546	C4-1/8-T0-2001-F
A2R537	0757-0410	1		RESISTOR 301 1% .125W F TC=0+-100	24546	C4-1/8-T0-301R-F
A2R538	8159-0005	0		RESISTOR-ZERO OHMS 22 AWG LEAD DIA	28480	8159-0005
A2R541	0757-0453	2		RESISTOR 30.1K 1% .125W F TC=0+-100	24546	C4-1/8-T0-3012-F
A2R542	0757-0442	9		RESISTOR 10K 1% .125W F TC=0+-100	24546	C4-1/8-T0-1002-F
A2R543	0757-0461	2	2	RESISTOR 68.1K 1% .125W F TC=0+-100	24546	C4-1/8-T0-6812-F
A2R544	0757-0465	6		RESISTOR 100K 1% .125W F TC=0+-100	24546	C4-1/8-T0-1003-F
A2R545	0757-0461	2		RESISTOR 68.1K 1% .125W F TC=0+-100	24546	C4-1/8-T0-6812-F
A2R546	0757-0438	3		RESISTOR 5.11K 1% .125W F TC=0+-100	24546	C4-1/8-T0-5111-F
A2R547	0757-0278	9	1	RESISTOR 1.78K 1% .125W F TC=0+-100	24546	C4-1/8-T0-1781-F
A2R548	0757-0401	0		RESISTOR 100 1% .125W F TC=0+-100	24546	C4-1/8-T0-101-F
A2R551	0757-0346	2		RESISTOR 10 1% .125W F TC=0+-100	24546	C4-1/8-T0-10R0-F
A2R910	0757-0420	3	1	RESISTOR 750 1% .125W F TC=0+-100	24546	C4-1/8-T0-751-F
A2RV101	0837-0320	2	1	VOLTAGE SUPPRESSOR VMAC=230V VMDC=300V	06132	S07K230
A2U101	10H5-0085	6	1	DC HYBRID	28480	10H5-0085
A2U111	1826-0521	3	4	IC OP AMP LOW-BIAS-H-IMPD DUAL 8-DIP-P	01295	TL072CP
A2U112	1826-0346	0	3	IC OP AMP GP DUAL 8-DIP-P PKG	27014	LM358N
A2U121	1820-3861	8	1	IC SHF-RGTR CMOS SYNCHRO SERIAL-IN	02768	TSC9404CJ
A2U122	1820-1662	3	5	IC SHF-RGTR CMOS SERIAL-IN PRL-OUT 8-BIT	3L585	CD4094BE
A2U123	1820-1662	3		IC SHF-RGTR CMOS SERIAL-IN PRL-OUT 8-BIT	3L585	CD4094BE
A2U211	1826-1133	5	2	IC OP AMP PRCN 8-DIP-P PKG	28480	1826-1133
A2U212	1826-1133	5		IC OP AMP PRCN 8-DIP-P PKG	28480	1826-1133
A2U213	1813-0437	3	1	IC OP AMP PRCN 8-TO-99 PKG	05438	OPA111BM
A2U214	1826-1205	2	5	ANALOG SWITCH 2 SPDT 16 DIP-P	02886	DG390CJ
A2U216	1858-0054	4	1	TRANSISTOR ARRAY 16-PIN PLSTC DIP	28480	'858-0054
A2U217	1826-0861	4	2	IC CONV 10-B-D/A 16-DIP-P PKG	24355	AD7533LN
A2U218	1826-0346	0		IC OP AMP GP DUAL 8-DIP-P PKG	27014	LM358N
A2U401	1826-0521	3		IC OP AMP LOW-BIAS-H-IMPD DUAL 8-DIP-P	01295	TL072CP
A2U402	1826-1205	2		ANALOG SWITCH 2 SPDT 16 -DIP-P	02886	DG390CJ

Table 6-2. Replaceable Parts (cont'd)

Reference Designation	HP Part Number	CD	Qty	Description	Mfr Code	Mfr Part Number
A2U403	1826-1205	2		ANALOG SWITCH 2 SPDT 16 -DIP-P	02886	DG390CJ
A2U501	1820-3549	9	1	IC-SINGLE-CHIP 8-BIT MICROCOMPUTER	03797	P8051 MASKED
A2U502	1820-3174	6	1	IC SCHMITT-TRIG CMOS/74HC NAND QUAD	28480	1820-3174
A2U503	1820-3081	4	1	IC FF CMOS/74HC D-TYPE POS-EDGE-TRIG	28480	1820-3081
A2U504	1813-0449	7	1	CLOCK-OSCILLATOR-XTAL 12.0-MHZ 0.01%	03797	RASCO-1C-SP89-12.0000MH
A2U505	1820-2925	3	2	IC CNTR CMOS/74HC BIN SYNCHRO	28480	1820-2925
A2U506	1820-2925	3		IC CNTR CMOS/74HC BIN SYNCHRO	28480	1820-2925
A2U507	1820-3672	9	1	IC MUXR/DATA-SEL CMOS/74HC 4-TO-1-LINE	28480	1820-3672
A2U508	1820-2924	2		IC GATE CMOS/74HC NOR QUAD 2-INP	28480	1820-2924
A2U509	1990-1075	1	2	OPTO-ISOLATOR LED-IC GATE IF=20MA-MAX	09761	KT3172
A2U510	1990-1075	1		OPTO-ISOLATOR LED-IC GATE IF=20MA-MAX	09761	KT3172
A2U511	1QF6-0066	3	1	KEY A/D HYBRID	28480	1QF6-0066
A2U512	1826-1265	4	2	IC OP AMP WB 8-DIP-P PKG	10899	SL30028
A2U513	1826-1265	4		IC OP AMP WB 8-DIP-P PKG	10899	SL30028
A2U514	1826-0346	0		IC OP AMP GP DUAL 8-DIP-P PKG	27014	LM358N
A2U515	1826-0138	8		IC COMPARATOR GP QUAD 14-DIP-P PKG	01295	LM339N
A2U516	1826-0635	0	1	IC OP AMP LOW-OFS 8-DIP-P PKG	06665	OP-07CP
A2U517	1826-0521	3		IC OP AMP LOW-BIAS-H-IMPD DUAL 8-DIP-P	01295	TL072CP
A2U901	1826-0551	9		IC 340A V RGLTR TO-220	01295	TL7805ACKC
A2U901H	1205-0592	2	1	HEAT SINK	28480	1205-0592
A2U911	1826-0396	0	1	IC 7815 V RGLTR TO-220	07263	7815UC
A2U921	1826-0214	1	1	IC V RGLTR TO-220	04713	MC7915CT
A2W501	8120-4576	7	1	CBL-FLEX-2.5 IN.	28480	8120-4576
A2XF101	2110-0642	3	1	FUSEHOLDER-EXTR POST 6.3A 250V BAY CAP	28480	2110-0642
A2XF101A	2110-0565	9	2	FUSEHOLDER CAP 12A MAX FOR UL	28480	2110-0565
A3	03457-66503	9	1	PC ASSY-AC	28480	03457-66503
A3C301	0160-5386	5	1	CAPACITOR-FXD .15UF +-10% 630VDC	02139	701B1LH154PK631SX
A3C302	0160-2005	9	1	CAPACITOR-FXD 230PF +-1% 500VDC MICA	28480	0160-2005
A3C302	0698-8706	8	4	RESISTOR 50K .1% .5W F TC=0+-25	28480	0698-8706
A3C303	0160-4791	4		CAPACITOR-FXD 10PF +-5% 100VDC CER 0+-30	28480	0160-4791
A3C303	0698-8706	8		RESISTOR 50K .1% .5W F TC=0+-25	28480	0698-8706
A3C304	0160-4791	4		CAPACITOR-FXD 10PF +-5% 100VDC CER 0+-30	28480	0160-4791
A3C305	0160-6251	5	1	CAPACITOR-FXD 20PF +-2% 500VDC CER	05704	R3619-12
A3C306	0160-4803	9	1	CAPACITOR-FXD 68PF +-5% 100VDC CER 0+-30	28480	0160-4803
A3C307	0160-6249	1	1	CAPACITOR-FXD 2400PF +-1% 50VDC CER	05704	R3619-13
A3C308	0160-4814	2	1	CAPACITOR-FXD 150PF +-5% 100VDC CER	28480	0160-4814
A3C310	0160-4789	0	1	CAPACITOR-FXD 15PF +-5% 100VDC CER 0+-30	28480	0160-4789
A3C312	0180-0291	3		CAPACITOR-FXD 1UF+-10% 35VDC TA	56289	150D105X9035A2
A3C313	0160-4571	8		CAPACITOR-FXD .1UF +80-20% 50VDC CER	28480	0160-4571
A3C314	0160-4532	1		CAPACITOR-FXD 1000PF +-20% 50VDC CER	28480	0160-4532
A3C315	0160-4793	6	1	CAPACITOR-FXD 6.8PF +-.5PF 100VDC CER	28480	0160-4793
A3C316	0160-4571	8		CAPACITOR-FXD .1UF +80-20% 50VDC CER	28480	0160-4571
A3C318	0160-2453	1	1	CAPACITOR-FXD .22UF +-10% 80VDC POLYE	28480	0160-2453
A3C319	0160-6207	1	3	CAPACITOR-FXD 1UF +-5% 50VDC MET-POLYC	10214	ECR7766J
A3C320	0160-6395	8	1	CAPACITOR-FXD .22UF +-5% 50VDC MET-POLYC	10214	ECR7763K
A3C321	0160-4801	7	1	CAPACITOR-FXD 100PF +-5% 100VDC CER	28480	0160-4801
A3C322	0160-4811	9	1	CAPACITOR-FXD 270PF +-5% 100VDC CER	28480	0160-4811
A3C323	0160-6394	7	1	CAPACITOR-FXD .022UF 75VDC	28480	0160-6394
A3C324	0160-4791	4		CAPACITOR-FXD 10PF +-5% 100VDC CER 0+-30	28480	0160-4791
A3C325	0180-0291	3		CAPACITOR-FXD 1UF+-10% 35VDC TA	56289	150D105X9035A2
A3C326	0160-3847	9		CAPACITOR-FXD .01UF +100-0% 50VDC CER	28480	0160-3847
A3C327	0180-0291	3		CAPACITOR-FXD 1UF+-10% 35VDC TA	56289	150D105X9035A2
A3C328	0180-0229	7		CAPACITOR-FXD 33UF+-10% 10VDC TA	56289	150D336X9010B2
A3C329	0160-4571	8		CAPACITOR-FXD .1UF +80-20% 50VDC CER	28480	0160-4571
A3C330	0180-0291	3		CAPACITOR-FXD 1UF+-10% 35VDC TA	56289	150D105X9035A2
A3C332	0121-0560	5	1	CAPACITOR-V AIR DIEL .8-5PF 500V PC-MTG	02953	V3246
A3C333	0160-6207	1		CAPACITOR-FXD 1UF +-5% 50VDC MET-POLYC	10214	ECR7766J
A3C334	0160-6207	1		CAPACITOR-FXD 1UF +-5% 50VDC MET-POLYC	10214	ECR7766J
A3C335	0160-0576	5	1	CAPACITOR-FXD .1UF +-20% 50VDC CER	28480	0160-0576
A3C336	0160-4791	4		CAPACITOR-FXD 10PF +-5% 100VDC CER 0+-30	28480	0160-4791
A3C337	0180 .291	3		CAPACITOR-FXD 1UF+-10% 35VDC TA	56289	150D105X9035A2

Table 6-2. Replaceable Parts (cont'd)

Reference Designation	HP Part Number	CD	Qty	Description	Mfr Code	Mfr Part Number
A3C340	0160-3847	9		CAPACITOR-FXD .01UF +100-0% 50VDC CER	28480	0160-3847
A3C341	0160-3847	9		CAPACITOR-FXD .01UF +100-0% 50VDC CER	28480	0160-3847
A3CR301	1901-0050	3		DIODE-SWITCHING 80V 200MA 2NS DO-35	28480	1901-0050
A3CR302	1901-0050	3		DIODE-SWITCHING 80V 200MA 2NS DO-35	28480	1901-0050
A3CR303	1901-0050	3		DIODE-SWITCHING 80V 200MA 2NS DO-35	28480	1901-0050
A3CR304	1901-0050	3		DIODE-SWITCHING 80V 200MA 2NS DO-35	28480	1901-0050
A3CR305	1901-0376	6		DIODE-GEN PRP 35V 50MA DO-35	28480	1901-0376
A3CR306	1901-0376	6		DIODE-GEN PRP 35V 50MA DO-35	28480	1901-0376
A3CR307	1901-0376	6		DIODE-GEN PRP 35V 50MA DO-35	28480	1901-0376
A3CR308	1901-0376	6		DIODE-GEN PRP 35V 50MA DO-35	28480	1901-0376
A3CR309	1902-3054	5	2	DIODE-ZNR 3.65V 5% DO-35 PD=.4W	28480	1902-3054
A3CR310	1902-0943	5	3	DIODE-ZNR 2.4V 5% DO-35 PD=.4W TC=-.037%	28480	1902-0943
A3CR311	1902-0943	5		DIODE-ZNR 2.4V 5% DO-35 PD=.4W TC=-.037%	28480	1902-0943
A3CR312	1902-3054	5		DIODE-ZNR 3.65V 5% DO-35 PD=.4W	28480	1902-3054
A3CR313	1901-0050	3		DIODE-SWITCHING 80V 200MA 2NS DO-35	28480	1901-0050
A3CR314	1901-0050	3		DIODE-SWITCHING 80V 200MA 2NS DO-35	28480	1901-0050
A3CR315	1901-0050	3		DIODE-SWITCHING 80V 200MA 2NS DO-35	28480	1901-0050
A3CR316	1901-0050	3		DIODE-SWITCHING 80V 200MA 2NS DO-35	28480	1901-0050
A3CR317	1901-0050	3		DIODE-SWITCHING 80V 200MA 2NS DO-35	28480	1901-0050
A3CR318	1901-0050	3		DIODE-SWITCHING 80V 200MA 2NS DO-35	28480	1901-0050
A3CR319	1901-0518	8		DIODE-SM SIG SCHOTTKY	28480	1901-0518
A3CR320	1901-0050	3		DIODE-SWITCHING 80V 200MA 2NS DO-35	28480	1901-0050
A3CR321	1901-0050	3		DIODE-SWITCHING 80V 200MA 2NS DO-35	28480	1901-0050
A3CR322	1901-0050	3		DIODE-SWITCHING 80V 200MA 2NS DO-35	28480	1901-0050
A3CR323	1902-0943	5		DIODE-ZNR 2.4V 5% DO-35 PD=.4W TC=-.037%	28480	1902-0943
A3CR324	1901-0050	3		DIODE-SWITCHING 80V 200MA 2NS DO-35	28480	1901-0050
A3CR325	1901-0050	3		DIODE-SWITCHING 80V 200MA 2NS DO-35	28480	1901-0050
A3CR326	1901-0518	8		DIODE-SM SIG SCHOTTKY	28480	1901-0518
A3JM301	8159-0005	0		RESISTOR-ZERO OHMS 22 AWG LEAD DIA	28480	8159-0005
A3JM303	8159-0005	0		RESISTOR-ZERO OHMS 22 AWG LEAD DIA	28480	8159-0005
A3JM304	8159-0005	0		RESISTOR-ZERO OHMS 22 AWG LEAD DIA	28480	8159-0005
A3K301	0490-1336	6	2	RELAY-S2EB-L2-5V	28480	0490-1336
A3K302	0490-1336	6		RELAY-S2EB-L2-5V	28480	0490-1336
A3MP1	03457-00610	1	1	0407 SHIELD-AC	28480	03457-00610
A3MP2	0403-0294	0	4	SPACER-SNAP-IN .500 IN LG; .280 IN OD	28480	0403-0294
A3Q301	1855-0611	3	6	TRANSISTOR J-FET N-CHAN TO-92 SI	02886	J-2741
A3Q302	1855-0611	3		TRANSISTOR J-FET N-CHAN TO-92 SI	02886	J-2741
A3Q303	1855-0611	3		TRANSISTOR J-FET N-CHAN TO-92 SI	02886	J-2741
A3Q304	1855-0611	3		TRANSISTOR J-FET N-CHAN TO-92 SI	02886	J-2741
A3Q305	1855-0611	3		TRANSISTOR J-FET N-CHAN TO-92 SI	02886	J-2741
A3Q306	1855-0611	3		TRANSISTOR J-FET N-CHAN TO-92 SI	02886	J-2741
A3Q307	1855-0301	8	1	TRANSISTOR-JFET DUAL 2N5198 N-CHAN	15818	2N5198
A3Q308	1854-0215	1		TRANSISTOR NPN SI PD=350MW FT=300MHZ	04713	2N3904
A3Q309	1855-0406	4	1	TRANSISTOR J-FET P-CHAN D-MODE SI	32293	IT110
A3R302	0698-8706	8		RESISTOR 50K .1% .5W F TC=0+-25	28480	0698-8706
A3R303	0698-8706	8		RESISTOR 50K .1% .5W F TC=0+-25	28480	0698-8706
A3R304	0699-1568	8	1	RESISTOR 900K .1% .25W F TC=0+-10	06952	CM65-T13
A3R305	0699-1569	9	1	RESISTOR 991K .1% .25W F TC=0+-10	06952	CM65-T13
A3R306	0757-0446	3		RESISTOR 15K 1% .125W F TC=0+-100	24546	C4-1/8-T0-1502-F
A3R307	0699-1635	0	1	RESISTOR 8.1K .1% .1W F TC=0+-10	06952	CM55-T13
A3R308	0699-1629	2		RESISTOR 900 .1% .125W F TC=0+-10	06952	CM60-T13
A3R309	0757-0401	0		RESISTOR 100 1% .125W F TC=0+-100	24546	C4-1/8-T0-101-F
A3R310	0698-8777	3		RESISTOR 1K 5% .25W CC TC=-400/+900	28480	0698-8777
A3R311	0698-8777	3		RESISTOR 1K 5% .25W CC TC=-400/+900	28480	0698-8777
A3R312	0698-3279	0	4	RESISTOR 4.99K 1% .125W F TC=0+-100	24546	C4-1/8-T0-4991-F
A3R313	0698-3279	0		RESISTOR 4.99K 1% .125W F TC=0+-100	24546	C4-1/8-T0-4991-F
A3R314	0698-8777	3		RESISTOR 1K 5% .25W CC TC=-400/+900	28480	0698-8777
A3R315	0757-0446	3		RESISTOR 15K 1% .125W F TC=0+-100	24546	C4-1/8-T0-1502-F
A3R316	0757-0446	3		RESISTOR 15K 1% .125W F TC=0+-100	24546	C4-1/8-T0-1502-F
A3R317	0757-0446	3		RESISTOR 15K 1% .125W F TC=0+-100	24546	C4-1/8-T0-1502-F
A3R318	0757-0446	3		RESISTOR 15K 1% .125W F TC=0+-100	24546	C4-1/8-T0-1502-F
A3R319	0698-6343	5	1	RESISTOR 9K .1% .125W F TC=0+-25	28480	0698-6343
A3R320	0698-6362	8	2	RESISTOR 1K .1% .125W F TC=0+-25	28480	0698-6362
A3R321	0683-1055	5		RESISTOR 1M 5% .25W FC TC=-800/+900	01121	CB1055

See introduction to this section for ordering information

Table 6-2. Replaceable Parts (cont'd)

Reference Designation	HP Part Number	CD	Qty	Description	Mfr Code	Mfr Part Number
A3R322	0698-8777	3		RESISTOR 1K 5% .25W CC TC=-400/+900	28480	0698-8777
A3R323	0683-1055	5		RESISTOR 1M 5% .25W FC TC=-800/+900	01121	CB1055
A3R324	0683-3055	9	1	RESISTOR 3M 5% .25W FC TC=-900/+1100	01121	CB3055
A3R325	0757-0463	4	2	RESISTOR 82.5K 1% .125W F TC=0+-100	24546	C4-1/8-T0-8252-F
A3R326	0757-0463	4		RESISTOR 82.5K 1% .125W F TC=0+-100	24546	C4-1/8-T0-8252-F
A3R327	0698-3228	9	3	RESISTOR 49.9K 1% .125W F TC=0+-100	28480	0698-3228
A3R328	0699-1619	0	2	RESISTOR-MATCHED SET 1.8K OHM, 200 OHM	05525	SPTF-141-2
A3R329	0699-1619	0		RESISTOR-MATCHED SET 1.8K OHM, 200 OHM	05525	SPTF-141-2
A3R330	0757-0407	6		RESISTOR 200 1% .125W F TC=0+-100	24546	C4-1/8-T0-201-F
A3R331	0757-0407	6		RESISTOR 200 1% .125W F TC=0+-100	24546	C4-1/8-T0-201-F
A3R332	0699-0467	4	1	RESISTOR 1.8K .1% .1W F TC=0+-10	28480	0699-0467
A3R333	0699-0082	9	1	RESISTOR 215 .1% .1W F TC=0+-10	28480	0699-0082
A3R334	0699-0154	6	1	RESISTOR 7.2K .1% .125W F TC=0+-25	28480	0699-0154
A3R335	0698-3497	4	1	RESISTOR 6.04K 1% .125W F TC=0+-100	24546	C4-1/8-T0-604R-F
A3R336	0757-0407	6		RESISTOR 200 1% .125W F TC=0+-100	24546	C4-1/8-T0-201-F
A3R337	0757-0472	5	2	RESISTOR 200K 1% .125W F TC=0+-100	24546	C4-1/8-T0-2003-F
A3R338	0698-6362	8		RESISTOR 1K .1% .125W F TC=0+-25	28480	0698-6362
A3R339	0698-3279	0		RESISTOR 4.99K 1% .125W F TC=0+-100	24546	C4-1/8-T0-4991-F
A3R340	0698-3279	0		RESISTOR 4.99K 1% .125W F TC=0+-100	24546	C4-1/8-T0-4991-F
A3R341	0757-0442	9		RESISTOR 10K 1% .125W F TC=0+-100	24546	C4-1/8-T0-1002-F
A3R342	0757-0442	9		RESISTOR 10K 1% .125W F TC=0+-100	24546	C4-1/8-T0-1002-F
A3R343	0757-0472	5		RESISTOR 200K 1% .125W F TC=0+-100	24546	C4-1/8-T0-2003-F
A3R345	0757-0442	9		RESISTOR 10K 1% .125W F TC=0+-100	24546	C4-1/8-T0-1002-F
A3R346	0757-0280	3		RESISTOR 1K 1% .125W F TC=0+-100	24546	C4-1/8-T0-1001-F
A3R347	0757-0449	8		RESISTOR 20K 1% .125W F TC=0+-100	24546	C4-1/8-T0-2002-F
A3R348	0757-0422	5	1	RESISTOR 909 1% .125W F TC=0+-100	24546	C4-1/8-T0-909R-F
A3R349	0757-0467	8	1	RESISTOR 121K 1% .125W F TC=0+-100	24546	C4-1/8-T0-1213-F
A3R350	0757-0280	3		RESISTOR 1K 1% .125W F TC=0+-100	24546	C4-1/8-T0-1001-F
A3R351	0757-0284	7	1	RESISTOR 150 1% .125W F TC=0+-100	24546	C4-1/8-T0-151-F
A3R352	0757-0449	6		RESISTOR 20K 1% .125W F TC=0+-100	24546	C4-1/8-T0-2002-F
A3R353	0757-0468	9	2	RESISTOR 130K 1% .125W F TC=0+-100	24546	C4-1/8-T0-1303-F
A3R354	0757-0453	2		RESISTOR 30.1K 1% .125W F TC=0+-100	24546	C4-1/8-T0-3012-F
A3R355	0757-0449	6		RESISTOR 20K 1% .125W F TC=0+-100	24546	C4-1/8-T0-2002-F
A3R356	0698-3447	4	1	RESISTOR 422 1% .125W F TC=0+-100	24546	C4-1/8-T0-422R-F
A3R357	0683-1055	5		RESISTOR 1M 5% .25W FC TC=-800/+900	01121	CB1055
A3R358	0683-5135	0	4	RESISTOR 51K 5% .25W FC TC=-400/+800	01121	CB5135
A3R359	0683-5135	0		RESISTOR 51K 5% .25W FC TC=-400/+800	01121	CB5135
A3R360	0683-5135	0		RESISTOR 51K 5% .25W FC TC=-400/+800	01121	CB5135
A3R361	0683-5135	0		RESISTOR 51K 5% .25W FC TC=-400/+800	01121	CB5135
A3R362	0698-4500	2	1	RESISTOR 57.6K 1% .125W F TC=0+-100	24546	C4-1/8-T0-5762-F
A3R363	0698-3228	9		RESISTOR 49.9K 1% .125W F TC=0+-100	28480	0698-3228
A3R364	0757-0440	7	1	RESISTOR 7.5K 1% .125W F TC=0+-100	24546	C4-1/8-T0-7501-F
A3R365	0698-3228	9		RESISTOR 49.9K 1% .125W F TC=0+-100	28480	0698-3228
A3R366	0757-0442	9		RESISTOR 10K 1% .125W F TC=0+-100	24546	C4-1/8-T0-1002-F
A3R367	0757-0453	2		RESISTOR 30.1K 1% .125W F TC=0+-100	24546	C4-1/8-T0-3012-F
A3R368	0757-0468	9		RESISTOR 130K 1% .125W F TC=0+-100	24546	C4-1/8-T0-1303-F
A3R369	0757-0280	3		RESISTOR 1K 1% .125W F TC=0+-100	24546	C4-1/8-T0-1001-F
A3R370	0757-0280	3		RESISTOR 1K 1% .125W F TC=0+-100	24546	C4-1/8-T0-1001-F
A3R371	0757-0446	3		RESISTOR 15K 1% .125W F TC=0+-100	24546	C4-1/8-T0-1502-F
A3R372	0757-0446	3		RESISTOR 15K 1% .125W F TC=0+-100	24546	C4-1/8-T0-1502-F
A3R373	0698-6286	5	2	RESISTOR 100M 10% .25W FC TC=-900/+1200	01121	CB1071
A3R374	0698-6286	5		RESISTOR 100M 10% .25W FC TC=-900/+1200	01121	CB1071
A3RP301	1810-0232	0	1	NETWORK-RES 8-SIP100.0K OHM X 6	56289	216CH104X9PM
A3U301	1826-0521	3		IC OP AMP LOW-BIAS-H-IMPD DUAL 8-DIP-P	01295	TL072CP
A3U302	1826-1309	7	2	IC OP AMP WB 14-DIP-P PKG	03801	HA3-2625-5 SELECTED
A3U303	1826-1205	2		ANALOG SWITCH 2 SPDT 16 -DIP-P	02886	DG390CJ
A3U304	1826-1309	7		IC OP AMP WB 14-DIP-P PKG	03801	HA3-2625-5 SELECTED
A3U305	1826-1301	9	1	RMS/DC 14-CERDIP BPLR	03296	AD41790
A3U306	1826-1205	2		ANALOG SWITCH 2 SPDT 16 -DIP-P	02886	DG390CJ
A3U307	1826-0962	6	1	IC OP AMP LOW-BIAS-H-IMPD DUAL 8-DIP-P	28480	1826-0962
A3U308	1826-0493	8	1	IC OP AMP LOW-BIAS-H-IMPD 8-DIP-P PKG	04713	MLM308AP1
A3U309	1826-0412	1	2	IC COMPARATOR PRCN D AL 8-DIP-P PKG	27014	LM393N
A3U310	1826-0065	0	1	IC COMPARATOR PRCN 8-DIP-P PKG	S0545	UPC311C

See Introduction to this section for ordering information

Table 6-2. Replaceable Parts (cont'd)

Reference Designation	HP Part Number	C D	Qty	Description	Mfr Code	Mfr Part Number
A3U311	1826-0861	4		IC CONV 10-B-D/A 16-DIP-P PKG	24355	AD7533LN
A3U312	1826-0138	8		IC COMPARATOR GP QUAD 14-DIP-P PKG	01295	LM339N
A3U313	1826-0412	1		IC COMPARATOR PRCN DUAL 8-DIP-P PKG	27014	LM393N
A3U314	1820-1662	3		IC SHF-RGTR CMOS SERIAL-IN PRL-OUT 8-BIT	3L585	CD4094BE
A3U315	1820-1662	3		IC SHF-RGTR CMOS SERIAL-IN PRL-OUT 8-BIT	3L585	CD4094BE
A3U316	1820-1662	3		IC SHF-RGTR CMOS SERIAL-IN PRL-OUT 8-BIT	3L585	CD4094BE
A3U317	1855-0591	8	1	TRANSISTOR ARRAY 14-PIN PLSTC DIP	02886	VQ1000J
A3U318	1826-0994	4	1	IC V RGLTR-ADJ-NEG 1.2/37V TO-92 PKG	28480	1826-0994
A3W303	03457-61602	9	1	CBL ASSY-AC BD	28480	03457-61602
A4	03457-60201	2	1	ASSY-PNL, FRONT	28480	03457-60201
A4FL1	9170-1183	2		CORE-TOROID AL=75-NH/TT	01897	846T250-4C4
A4W1	03457-61604	1	1	CBL ASSY-FRONT	28480	03457-61604
A4W1A	0362-0265	7	6	CONNECTOR-SGL CONT SKT 1.14-MM-BSC-SZ	28480	0362-0265
A5	03457-67901	3	1	ASSY-BDG POST RR	28480	03457-67901
A5A1	03457-26506	8	1	PC BD-BLK (22245)	28480	03457-26506
A5A1E891	1970-0052	0		TUBE-ELECTRON SURGE V PTCTR	28480	1970-0052
A5A1F891	2110-0043	8		FUSE 1.5A 250V NTD 1.25X.25 UL	28480	2110-0043
A5A1J893	1252-0274	6	1	CONN-UTIL QIKMT 6-CKT 6-CONT	02463	SMZ6PH-4028
A5A1XF891	2110-0643	4	1	FUSEHOLDER-CLIP TYPE 15A 250 V	28480	2110-0643
F601E	2110-0235	0	1	FUSE .2A 250V TD 1.25X.25 UL	75915	313.200
F601M	2110-0719	5	1	FUSE .08A 250V TD IEC	04713	218.080
FL601	9135-0167	6	1	FLTR-LINE	28480	9135-0167
J601	1250-0083	1	2	CONNECTOR-RF BNC FEM SGL-HOLE-FR 50-OHM	28480	1250-0083
J602	1250-0083	1		CONNECTOR-RF BNC FEM SGL-HOLE-FR 50-OHM	28480	1250-0083
J603	1510-0038	8	1	BINDING POST ASSY SGL THD-STUD	28480	1510-0038
MP1	5040-5196	6	1	TOP SHELL	28480	5040-5196
MP2	5040-5195	5	1	SHELL-BOTTOM	28480	5040-5195
MP3	5040-7201	8	1	FOOT	28480	5040-7201
MP4	1460-1345	5	1	TILT STAND SST	28480	1460-1345
MP5	5040-7222	3	1	FOOT-NON SKID	28480	5040-7222
MP6	03457-00612	3	1	0601 SHLD-DGTL, B	28480	03457-00612
MP7	03457-00604	3	1	0601 SHLD-ANLG	28480	03457-00604
MP8	03457-44701	3	1	INSUL-SUPPORT	28480	03457-44701
MP9	5040-5297	8	1	SPACER	28480	5040-5297
MP10	1600-1185	9	1	FASTENER-RACK MOUNT	28480	1600-1185
MP11	5180-0223	6	1	SO TRIM CLAM SHL	28480	5180-0223
MP12	03457-00611	2	1	[illegible] SHLD-DGTL	28480	03457-00611
MP13	03457-00603	2	1	[illegible] SHLD-ANLG	28480	03457-00603
MP14	03457-00605	4	1	0601 GDE-SCNR	28480	03457-00605
MP15	03457-41201	2	1	GUIDE-PC BD	28480	03457-41201
MP18	03457-00201	6	1	0601 REAR PANEL	28480	03457-00201
T601	9100-4445	8	1	XFMR-POWER	28480	9100-4445
T601P701A	1252-0178	9	1	CONN-POST TYPE	03445	10-17-3081
T601P701B	1251-3073	7	1	CONTACT-CONN U/W-POST-TYPE FEM CRP	28480	1251-3073
T601P701C	1251-4823	7	1	CONNECTOR-SGL CONT QDISC-FEM	28480	1251-4823
T601P702	1252-0113	2	2	CONN-POST TYPE .100-PIN-SPCG 5-CONT	28480	1252-0113
T601P901	1252-0113	2		CONN-POST TYPE .100-PIN-SPCG 5-CONT	28480	1252-0113
W1	8120-1378	1	1	CABLE ASSY 18AWG 3-CNDCT JGK-JKT	28480	8120-1378
W2	03457-61605	2	1	CBL ASSY-REAR	28480	03457-61605
W2A	0362-0265	7		CONNECTOR-SGL CONT SKT 1.14-MM-BSC-SZ	28480	0362-0265
W2L	9170-1183	2	2	CORE-TOROID AL=75-NH/TT	01897	846T250-4C4
W2P	1252-0275	7	1	CONN-UTIL QIKM 6-CKT	02463	SMS6P3

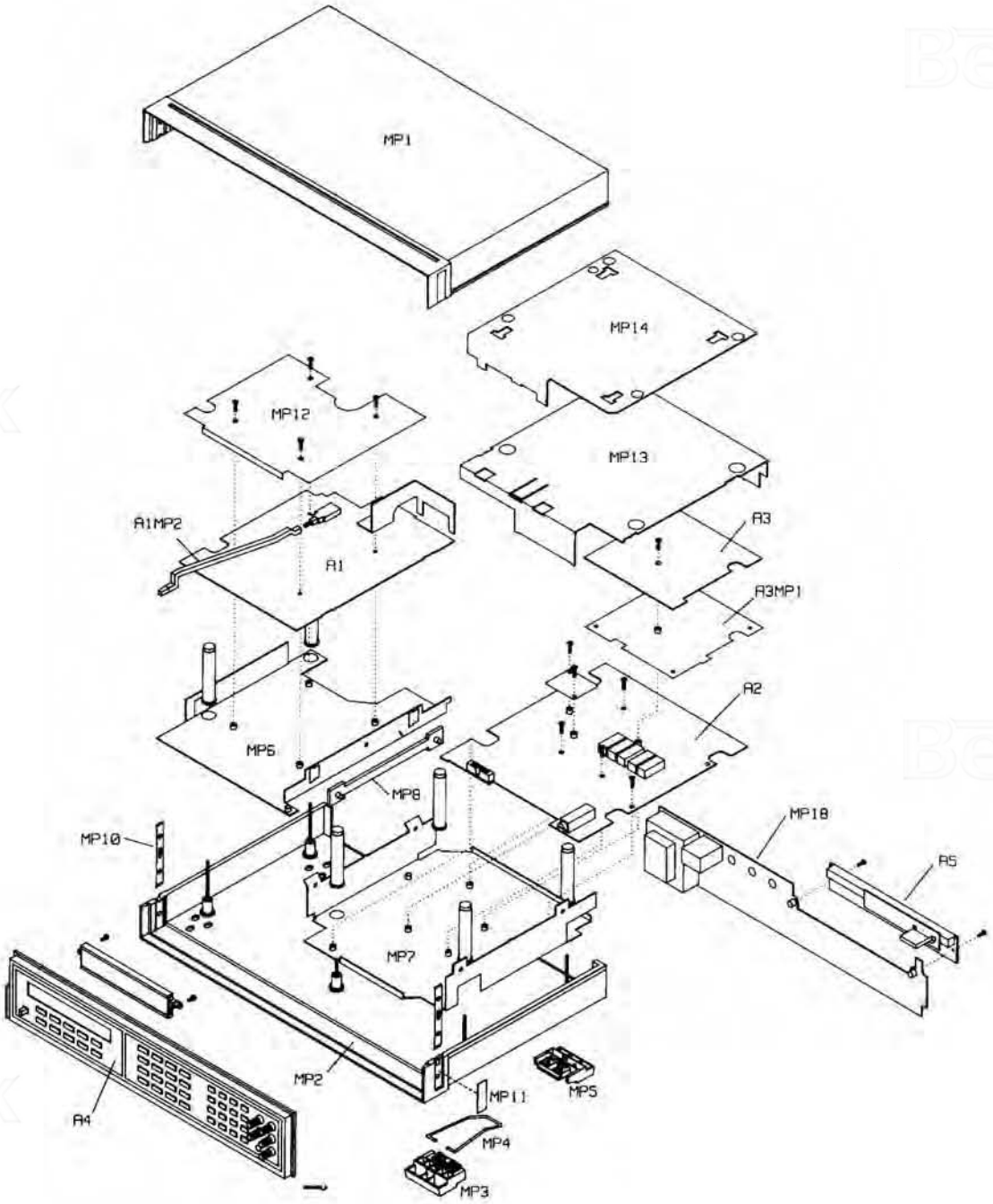

Figure 6-1. Exploded View

Table 6-2. Replaceable Parts (cont'd)

Reference Designation	HP Part Number	C D	Qty	Description	Mfr Code	Mfr Part Number
W2P1A	1252-0798	9	5	CONTACT-CONN U/W-UTIL FEM CRP	02463	SC20M-1S6
W3	8120-4208	2	1	FLAT RIBBON ASSY 28-AWG 34-COND	28480	8120-4208
W4	03457-61603	0	1	CBL ASSY-SCANNER	28480	03457-61603
XF601	2110-0564	8	1	FUSEHOLDER BODY 12A MAX FOR UL	H9027	031.1657
XF601A	2110-0565	9		FUSEHOLDER CAP 12A MAX FOR UL	28480	2110-0565
XF601B	2110-0567	1	1	FUSEHOLDER CAP 12A MAX FOR UL	28480	2110-0567
XF601C	2110-0569	3	1	FUSEHOLDER COMPONENT NUT; THREAD M12.7	28480	2110-0569

Replaceable Parts

Table 6-2. Replaceable Parts (cont'd)

Reference Designation	HP Part Number	C D	Qty	Description	Mfr Code	Mfr Part Number
				44491A		
	44491A	3	1	GEN PURPOSE BCH MUX	28480	44491A
A1C801	0160-4571	8	4	CAPACITOR-FXD 1UF +80-20% 50VDC CER	28480	0160-4571
A1C804	0160-4571	8		CAPACITOR-FXD 1UF +80-20% 50VDC CER	28480	0160-4571
A1C805	0160-4571	8		CAPACITOR-FXD 1UF +80-20% 50VDC CER	28480	0160-4571
A1C80A	0160-4571	8		CAPACITOR-FXD 1UF +80-20% 50VDC CER	28480	0160-4571
A1C807	0180-0291	3	3	CAPACITOR-FXD 1UF+-10% 35VDC TA	56289	150D105X9035A2
A1C812	0180-0291	3		CAPACITOR-FXD 1UF+-10% 35VDC TA	56289	150D105X9035A2
A1C813	0180-0291	3		CAPACITOR-FXD 1UF+-10% 35VDC TA	56289	150D105X9035A2
A1CR801	1901-0050	3	28	DIODE-SWITCHING 80V 200MA 2NS DO-35	28480	1901-0050
A1CR802	1901-0050	3		DIODE-SWITCHING 80V 200MA 2NS DO-35	28480	1901-0050
A1CR803	1901-0050	3		DIODE-SWITCHING 80V 200MA 2NS DO-35	28480	1901-0050
A1CR804	1901-0050	3		DIODE-SWITCHING 80V 200MA 2NS DO-35	28480	1901-0050
A1CR805	1901-0050	3		DIODE-SWITCHING 80V 200MA 2NS DO-35	28480	1901-0050
A1CR806	1901-0050	3		DIODE-SWITCHING 80V 200MA 2NS DO-35	28480	1901-0050
A1CR807	1901-0050	3		DIODE-SWITCHING 80V 200MA 2NS DO-35	28480	1901-0050
A1CR808	1901-0050	3		DIODE-SWITCHING 80V 200MA 2NS DO-35	28480	1901-0050
A1CR809	1901-0050	3		DIODE-SWITCHING 80V 200MA 2NS DO-35	28480	1901-0050
A1CR810	1901-0050	3		DIODE-SWITCHING 80V 200MA 2NS DO-35	28480	1901-0050
A1CR811	1901-0050	3		DIODE-SWITCHING 80V 200MA 2NS DO-35	28480	1901-0050
A1CR812	1901-0050	3		DIODE-SWITCHING 80V 200MA 2NS DO-35	28480	1901-0050
A1CR813	1901-0050	3		DIODE-SWITCHING 80V 200MA 2NS DO-35	28480	1901-0050
A1CR814	1901-0050	3		DIODE-SWITCHING 80V 200MA 2NS DO-35	28480	1901-0050
A1CR815	1901-0050	3		DIODE-SWITCHING 80V 200MA 2NS DO-35	28480	1901-0050
A1CR816	1901-0050	3		DIODE-SWITCHING 80V 200MA 2NS DO-35	28480	1901-0050
A1CR817	1901-0050	3		DIODE-SWITCHING 80V 200MA 2NS DO-35	28480	1901-0050
A1CR818	1901-0050	3		DIODE-SWITCHING 80V 200MA 2NS DO-35	28480	1901-0050
A1CR819	1901-0050	3		DIODE-SWITCHING 80V 200MA 2NS DO-35	28480	1901-0050
A1CR820	1901-0050	3		DIODE-SWITCHING 80V 200MA 2NS DO-35	28480	1901-0050
A1CR821	1901-0050	3		DIODE-SWITCHING 80V 200MA 2NS DO-35	28480	1901-0050
A1CR822	1901-0050	3		DIODE-SWITCHING 80V 200MA 2NS DO-35	28480	1901-0050
A1CR823	1901-0050	3		DIODE-SWITCHING 80V 200MA 2NS DO-35	28480	1901-0050
A1CR824	1901-0050	3		DIODE-SWITCHING 80V 200MA 2NS DO-35	28480	1901-0050
A1CR825	1901-0050	3		DIODE-SWITCHING 80V 200MA 2NS DO-35	28480	1901-0050
A1CR826	1901-0050	3		DIODE-SWITCHING 80V 200MA 2NS DO-35	28480	1901-0050
A1CR827	1901-0050	3		DIODE-SWITCHING 80V 200MA 2NS DO-35	28480	1901-0050
A1CR828	1901-0050	3		DIODE-SWITCHING 80V 200MA 2NS DO-35	28480	1901-0050
A1F801	2110-0043	8	2	FUSE 1.5A 250V NTD 1.25X.25 UL	28480	2110-0043
A1F802	2110-0043	8		FUSE 1.5A 250V NTD 1.25X.25 UL	28480	2110-0043
A1K800	0490-1337	7	8	RELAY-S4EB-L2-5V	28480	0490-1337
A1K801	0490-1337	7		RELAY-S4EB-L2-5V	28480	0490-1337
A1K802	0490-1337	7		RELAY-S4EB-L2-5V	28480	0490-1337
A1K803	0490-1337	7		RELAY-S4EB-L2-5V	28480	0490-1337
A1K804	0490-1336	6	2	RELAY-S2EB-L2-5V	28480	0490-1336
A1K805	0490-1336	6		RELAY-S2EB-L2-5V	28480	0490-1336
A1K806	0490-1337	7		RELAY-S4EB-L2-5V	28480	0490-1337
A1K807	0490-1337	7		RELAY-S4EB-L2-5V	28480	0490-1337
A1K808	0490-1337	7		RELAY-S4EB-L2-5V	28480	0490-1337
A1K809	0490-1337	7		RELAY-S4EB-L2-5V	28480	0490-1337
A1MP1	0403-0464	6	2	EXTR-PC RD WHT NYL .062-IN-BD-THKNS	03743	LP-06 WHITE
A1MP1A	1480-0625	4	1	PIN-GRV .0938-IN-DIA .25-IN-LG SST	28480	1480-0625
A1P801	1252-0267	7	1	CONNECTOR-PC EDGE 10-CONT/ROW 2-ROWS	09922	PR10-A103-L5(33)
A1P802	44473-82102	4	1	CONN-2X11 RT CLN	28480	44473-82102
A1P803	1252-0273	5	1	CONN-UTIL QIKMT 6-CKT 6-CONT	02463	SMS&PH-3026
A1R801	0683-2025	1	7	RESISTOR 2K 5% .25W FC TC=-400/+700	01121	CB2025
A1R802	0683-2025	1		RESISTOR 2K 5% .25W FC TC=-400/+700	01121	CB2025
A1R803	0683-2025	1		RESISTOR 2K 5% .25W FC TC=-400/+700	01121	CB2025
A1R804	0683-2025	1		RESISTOR 2K 5% .25W FC TC=-400/+700	01121	CB2025
A1R805	0683-2025	1		RESISTOR 2K 5% .25W FC TC=-400/+700	01121	CB2025
A1R806	0683-2025	1		RESISTOR 2K 5% .25W FC TC=-400/+700	01121	CB2025
A1R807	0683-2025	1		RESISTOR 2K 5% .25W FC TC=-400/+700	01121	CB2025
A1R813	0698-8827	4	1	RESISTOR 1M 1% .125W F TC=0+-100	28480	0698-8827
A1U801	1820-1662	A	2	IC SHF-RGTR CMOS SERIAL-IN PRL-OUT 8-BIT	3L585	CD4094AE
A1U802	1820-1662	A		IC SHF-RGTR CMOS SERIAL-IN PRL-OUT 8-BIT	3L585	CD4094AE
A1U803	1858-0076	8	2	TRANSISTOR ARRAY 14-PIN PLSTC TO-116	04713	MPQ2907P
A1U804	1858-0076	8		TRANSISTOR ARRAY 14-PIN PLSTC TO-116	04713	MPQ2907P
A1U805	1858-0047	5	1	TRANSISTOR ARRAY 16-PIN PLSTC DIP	13606	DNA-2003A
A1U806	1820-1406	9	2	IC GATE CMOS AND QUAD 2-INP	3L585	CD4081BE
A1U807	1820-1406	9		IC GATE CMOS AND QUAD 2-INP	3L585	CD4081BE
A1XF801	2110-0642	3	2	FUSEHOLDER-EXTR POST .6 3A 250V BAY CAP	28480	2110-0642
A1XF802	2110-0565	9	2	FUSEHOLDER CAP 12A MAX FOR UL	28480	2110-0565

See introduction to this section for ordering information
*Indicates factory selected value

Table 6-2. Replaceable Parts (cont'd)

Reference Designation	HP Part Number	C D	Qty	Description	Mfr Code	Mfr Part Number
				44491A Cont'd		
A1XF1F02	2110-0642	3		FUSEHOLDER-EXTR POST 6.3A 250V BAY CAP	28480	2110-0642
A1XF1F02A	2110-0565	9		FUSEHOLDER CAP 12A MAX FOR 1F	28480	2110-0565
A1	44491-66501	5	1	PC ASSY-LFN PUR	28480	44491-66501
J1A2	44491-62101	3	1	CONN-TERM BLOCK	28480	44491-62101
MP1	03457-00609	8	1	SHLD-SCHNR TOP	28480	03457-00609
MP2	03457-00608	7	1	SHLD-SCNR BOTTOM	28480	03457-00608
MP2A	0515-0843	2	1	SCREW-MACH M2.5 X 0.45 20MM-LG	28480	0515-0843
MP3	5040-5193	3	1	HOUSING-CONN	28480	5040-5193
MP3A	44491-84301	1	1	LBL-IDENT	28480	44491-84301
MP4	5040-5194	4	1	CABLE CLAMP	28480	5040-5194
				44492A		
A1	44492A	4	1	MUXR, 10 CHANNEL	28480	44492A
C1	0160-4571	8	5	CAPACITOR-FXD .1UF +80-20% 50VDC CER	28480	0160-4571
C2	0160-4571	8		CAPACITOR-FXD .1UF +80-20% 50VDC CER	28480	0160-4571
C3	0180-0291	3	3	CAPACITOR-FXD 1UF+-10% 35VDC TA	56289	150D105X9035A2
C4	0160-4571	8		CAPACITOR-FXD .1UF +80-20% 50VDC CER	28480	0160-4571
C5	0160-4571	8		CAPACITOR-FXD .1UF +80-20% 50VDC CER	28480	0160-4571
C6	0160-4571	8		CAPACITOR-FXD .1UF +80-20% 50VDC CER	28480	0160-4571
C7	0180-0291	3		CAPACITOR-FXD 1UF+-10% 35VDC TA	56289	150D105X9035A2
C8	0180-0291	3		CAPACITOR-FXD 1UF+-10% 35VDC TA	56289	150D105X9035A2
CR1	1902-0965	1	10	DIODE-ZNR 20V 5% DO-35 PD=.4W TC=+.092%	28480	1902-0965
CR2	1902-0965	1		DIODE-ZNR 20V 5% DO-35 PD=.4W TC=+.092%	28480	1902-0965
CR3	1902-0965	1		DIODE-ZNR 20V 5% DO-35 PD=.4W TC=+.092%	28480	1902-0965
CR4	1902-0965	1		DIODE-ZNR 20V 5% DO-35 PD=.4W TC=+.092%	28480	1902-0965
CR5	1902-0965	1		DIODE-ZNR 20V 5% DO-35 PD=.4W TC=+.092%	28480	1902-0965
CR6	1902-0965	1		DIODE-ZNR 20V 5% DO-35 PD=.4W TC=+.092%	28480	1902-0965
CR7	1902-0965	1		DIODE-ZNR 20V 5% DO-35 PD=.4W TC=+.092%	28480	1902-0965
CR8	1902-0965	1		DIODE-ZNR 20V 5% DO-35 PD=.4W TC=+.092%	28480	1902-0965
CR9	1902-0965	1		DIODE-ZNR 20V 5% DO-35 PD=.4W TC=+.092%	28480	1902-0965
CR10	1902-0965	1		DIODE-ZNR 20V 5% DO-35 PD=.4W TC=+.092%	28480	1902-0965
CR11	1901-0050	3	1	DIODE-SWITCHING 60V 200MA 2NS DO-35	28480	1901-0050
K1	0490-1461	8	10	RELAY-REED 2A 250MA 1500VD 5VDC-COIL 5A	04549	3400-0072
K2	0490-1461	8		RELAY-REED 2A 250MA 1500VD 5VDC-COIL 5A	04549	3400-0072
K3	0490-1461	8		RELAY-REED 2A 250MA 1500VD 5VDC-COIL 5A	04549	3400-0072
K4	0490-1461	8		RELAY-REED 2A 250MA 1500VD 5VDC-COIL 5A	04549	3400-0072
K5	0490-1461	8		RELAY-REED 2A 250MA 1500VD 5VDC-COIL 5A	04549	3400-0072
K6	0490-1461	8		RELAY-REED 2A 250MA 1500VD 5VDC-COIL 5A	04549	3400-0072
K7	0490-1461	8		RELAY-REED 2A 250MA 1500VD 5VDC-COIL 5A	04549	3400-0072
K8	0490-1461	8		RELAY-REED 2A 250MA 1500VD 5VDC-COIL 5A	04549	3400-0072
K9	0490-1461	8		RELAY-REED 2A 250MA 1500VD 5VDC-COIL 5A	04549	3400-0072
K10	0490-1461	8		RELAY-REED 2A 250MA 1500VD 5VDC-COIL 5A	04549	3400-0072
L1	9100-3560	6	2	INDUCTOR RF-CH-MLD 5.6UH 5% .166DX.385LG	28480	9100-3560
L2	9100-3560	6		INDUCTOR RF-CH-MLD 5.6UH 5% .166DX.385LG	28480	9100-3560
P1	5180-6696	9	1	CONN-2X10M	28480	5180-6696
P2	44474-82102	5	1	CONN 2X11 RT CLN	28480	44474-82102
P3	1252-0273	5	1	CONN-UTIL QTKMT 5-CKT 6-CONT	02660	9M56PM-3D28
R1	0683-2025	1	10	RESISTOR 2K 5% .25W FC TC=-400/+700	01121	CB2025
R2	0683-2025	1		RESISTOR 2K 5% .25W FC TC=-400/+700	01121	CB2025
R3	0683-2025	1		RESISTOR 2K 5% .25W FC TC=-400/+700	01121	CB2025
R4	0683-2025	1		RESISTOR 2K 5% .25W FC TC=-400/+700	01121	CB2025
R5	0683-2025	1		RESISTOR 2K 5% .25W FC TC=-400/+700	01121	CB2025
R6	0683-2025	1		RESISTOR 2K 5% .25W FC TC=-400/+700	01121	CB2025
R7	0683-2025	1		RESISTOR 2K 5% .25W FC TC=-400/+700	01121	CB2025
R8	0683-2025	1		RESISTOR 2K 5% .25W FC TC=-400/+700	01121	CB2025
R9	0683-2025	1		RESISTOR 2K 5% .25W FC TC=-400/+700	01121	CB2025
R10	0683-2025	1		RESISTOR 2K 5% .25W FC TC=-400/+700	01121	CB2025
R11	0698-8768	2	2	RESISTOR 100 5% .25W CC TC=-400/+500	28480	0698-8768
R12	0698-8768	2		RESISTOR 100 5% .25W CC TC=-400/+500	28480	0698-8768
R13	0698-8827	4	1	RESISTOR 1M 1% .125W F TC=0+-100	28480	0698-8827
U1C1	1820-1662	3	2	IC SHF-RGTR CMOS SERIAL-IN PRL-OUT 8-BIT	34585	CD4094BE
U2C2	1820-1662	3		IC SHF-RGTR CMOS SERIAL-IN PRL-OUT 8-BIT	34585	CD4094BE
U3C3	1050-0076	0	3	TRANSISTOR ARRAY 14-PIN PLSTIC TO-116	04713	MPQ2907P
U4C4	1050-0076	0		TRANSISTOR ARRAY 14-PIN PLSTIC TO-116	04713	MPQ2907P
U5C5	1050-0076	0		TRANSISTOR ARRAY 14-PIN PLSTIC TO-116	04713	MPQ2907P
J1A1	44492-62101	4	1	CONN-TERM BLOCK	28480	44492-62101
A1	44492-66501	6	1	PC ASSY-RELAY	28480	44492-66501
MP1	03457-00608	7	1	SHLD-SCNR	28480	03457-00608
MP2	03457-00609	8	1	SHLD-SCNR	28480	03457-00609
MP3	0403-0464	6	2	EXTR-PL BD WHT NYL .062-.078 BD-THERS	03743	[illegible]

See introduction to this section for ordering information
*Indicates factory selected value

Table 6-4. Code List of Manufacturers

Mfr Code	Manufacturer Name	Address		Zip Code
H9027	SCHURTER A G H	LUZERN	SW	
S0545	NIPPON ELECTRIC CO	TOKYO	JP	
S4013	HITACHI	TOKYO	JP	
00494	ADDRESSOGRAPH MULTIGRAPH CORP	CLEVELAND	OH	44117
01121	ALLEN-BRADLEY CO	MILWAUKEE	WI	53204
01295	TEXAS INSTR INC SEMICOND CMPNT DIV	DALLAS	TX	75222
01417	CHRYSLER CORP DEFENSE OPN DIV	DETROIT	MI	48203
01852	THOMAS ELECTRONICS INC	WAYNE	NJ	07470
01863	UNIVERSITY METAL PROD CO	BOSTON	MA	02119
01897	MOLON MOTOR & COIL CORP	ROLLING MEADOWS	IL	60008
02041	PRECISION LAB DIV PRCN CINE EQUIP	BROOKLYN	NY	11203
02139	PLASTIC & RUBBER ENGINEERING INC	LOS ANGELES	CA	90001
02463	DEXTER CORP THE	WINDSOR LOCKS	CT	06096
02768	ILLINOIS TOOL WORKS INC FASTEX DIV	DES PLAINES	IL	60016
02886	DODGE-WASMUND MFG INC	PICO RIVERA	CA	90660
02932	UNITED PACKAGING CO INC	PHILADELPHIA	PA	19132
02953	PORTER CO P.L.	WOODLAND HILLS	CA	91367
03296	NYLON MOLDING CORP	SPRINGFIELD	NJ	07081
03445	LERCO DIV SPACE LOK INC	BURBANK	CA	91504
03797	ELDEMA DIV GENISCO TECHNOLOGY CORP	COMPTON	CA	90221
03801	MANDEX MFG CO INC	CHICAGO	IL	60632
03888	K D I PYROFILM CORP	WHIPPANY	NJ	07981
04713	MOTOROLA SEMICONDUCTOR PRODUCTS	PHOENIX	AZ	85008
05033	ISELI CO	WALWORTH	WI	53184
05438	TECHNICAL NAMEPLATE CORP	PASSAIC	NJ	07055
05525	VANGUARD INSTRUMENT CORP	MELVILLE LI	NY	11746
05704	ALAC INC	GLENDALE	CA	91209
05963	SHERWOOD MEDICAL INDUSTRIES INC	ST LOUIS	MO	63103
06132	COMPUTER TERMINAL CORP	SAN ANTONIO	TX	78784
06383	PANDUIT CORP	TINLEY PARK	IL	60477
06665	PRECISION MONOLITHICS INC	SANTA CLARA	CA	95050
06952	INSULATION SUPPLY CO	LOS ANGELES	CA	90021
07263	FAIRCHILD SEMICONDUCTOR DIV	MOUNTAIN VIEW	CA	94042
09761	BUNDY TUBING CO	WARREN	MI	48090
10214	GENERAL TRANSISTOR WESTERN CORP	LOS ANGELES	CA	90000
10899	EASTERN AIR DEVICES INC	GREAT NECK	NY	11021
12969	UNITRODE CORP	WATERTOWN	MA	02172
13103	THERMALLOY CO	DALLAS	TX	75234
14936	GENERAL INSTR CORP SEMICON PROD GP	HICKSVILLE	NY	11802
15818	TELEDYNE SEMICONDUCTOR	MOUNTAIN VIEW	CA	94043
17856	SILICONIX INC	SANTA CLARA	CA	95054
19701	MEPCO/ELECTRA CORP	MINERAL WELLS	TX	76067
22229	SOLITRON DEVICES INC (FETS, DIODES)	SAN DIEGO	CA	92123
24355	ANALOG DEVICES INC	NORWOOD	MA	02062
24546	CORNING GLASS WORKS (BRADFORD)	BRADFORD	PA	16701
27014	NATIONAL SEMICONDUCTOR CORP	SANTA CLARA	CA	95051
27167	CORNING GLASS WORKS (WILMINGTON)	WILMINGTON	NC	28401
28480	HEWLETT-PACKARD CO CORPORATE HQ	PALO ALTO	CA	94304
3L585	RCA CORP SOLID STATE DIV	SOMERVILLE	NJ	
32293	INTERSIL INC	CUPERTINO	CA	95014
56289	SPRAGUE ELECTRIC CO	NORTH ADAMS	MA	01247
75915	LITTELFUSE INC	DES PLAINES	IL	60016

SECTION VII
MANUAL CHANGES

7-1. INTRODUCTION

7-2. This section normally contains information necessary to adapt this manual to older instruments not directly covered by the current content. At this printing, however, the manual (and perhaps change sheets) does apply to all instruments. Therefore, no backdating information is included in this section.

7-3. Refer to Section I for information concerning manual coverage according to instrument serial number.

SECTION VIII
SERVICE

8-1. INTRODUCTION

8-2. This section contains information to aid in troubleshooting and repair of the HP 3457A Digital Multimeter. Included are safety considerations, theory of operation and troubleshooting procedures.

WARNING

The information contained in this section is intended for the use of service trained personnel who understand electronic circuitry and are aware of the hazards involved. Do not attempt to perform any of the procedures outlined in this section unless you are qualified to do so.

8-3. SAFETY CONSIDERATIONS

8-4. The HP 3457A is designed to meet international safety standards. To maintain these standards, the cautions, warnings, and other safety related information contained in this manual must be followed. Servicing of this instrument must be performed by service trained personnel.

WARNING

Any interruption of the protective grounding conductor (either inside or outside the instrument) or disconnection of the protective earth terminal will likely make the instrument dangerous. Intentional interruption of the protective grounding conductor is strictly prohibited.

The service information contained in this section normally requires removal of the protective covers and application of power. Voltages or signals at many points within the instrument may, if contacted, result in personal injury.

8-5. To protect personnel and prevent damage to the instrument, adjustment or repair with covers removed and power applied must be avoided as much as possible. When it becomes necessary to service the instrument under these conditions, the work must be performed by a skilled person who is aware of the hazards involved.

8-6. Be aware that it is possible for capacitors inside the instrument to remain charged when the instrument is turned off or when the power source has been disconnected.

8-7. Be certain that only the recommended fuse type (fast blow, correct current rating, etc.) is used for replacement. The use of repaired fuses or short circuiting the fuse holder is prohibited.

8-8. STATIC HANDLING

8-9. Static electricity is a familiar phenomenon which, except for an occasional shock, doesn't seem very serious. It has been proven in the electronics industry, however, that electrostatic discharge (ESD) is a major cause of component failure. In many cases, the component damaged may not fail immediately but cause poor instrument reliability and additional repairs at a later date. ESD damage can occur at static levels too low for human perception. It has been shown that ESD can affect both active and passive devices.

8-10. Any assembly removed from the instrument MUST be handled in accordance with anti-static handling procedures. This includes the optional plug-in assemblies.

8-11. The following guidelines are the minimum requirements for a static-safe service environment:

- The work bench must be equipped with a conductive table mat. The mat should be connected to earth ground through a 1 megohm resistor. The mat must be equipped with at least one connection for connecting wrist straps.
- All persons who handle and service the instrument must wear a conductive wrist strap in contact with bare skin. This wrist strap must be connected to the conductive table mat.
- All metal equipment at the work station must be grounded to earth ground. This includes soldering irons, de-soldering tools, shelving, and equipment stands.
- Only one common ground can be provided at a work station.
- The work station must be kept free of non-conductive items such as, common plastics, polybags, cardboard, cigarette or candy wrappers. There must be no rugs or carpet on the floor, shelving, or bench top.
- Proper containers must be used for shipping, storing and transporting assemblies.

8-12. RECOMMENDED TEST EQUIPMENT

8-13. Equipment to test and repair the HP 3457A is listed in Section I (Table 1-3) of this manual.

8-14. THEORY OF OPERATION

8-15. Introduction

8-16. The following paragraphs provide a simplified explanation of the HP 3457A circuit operation. Refer to the simplified block diagram in Figure 8-1 for the following description.

8-17. The HP 3457A can be divided into two basic sections; the Chassis Common circuitry and the Floating (isolated) Common circuitry. The chassis common circuitry provides instrument control and communication with other instruments, through the HP-IB, or the user through the front panel keyboard and display. The floating common circuitry is responsible for converting the analog input signals to digital information. The two sections communicate with each other through the isolation logic circuitry.

8-18. Chassis Common Section

8-19. The Chassis Common section consists of digital circuits and associated power supplies. The main circuits are the Master Processor, HP-IB Interface, Front Panel Interface (keyboard and display) and the Chassis Common Isolation Logic.

8-20. The Master Processor controls the HP 3457A's measurement process, communicates with the Front Panel and HP-IB interface, applies measurement corrections and performs math calculations. The Master Processor circuitry consists of a micro-processor, program ROMs, storage RAMs and associated digital circuitry.

8-21. The HP-IB Interface circuitry provides communication between the master processor and other instruments connected to the interface bus. The HP 3457A master processor receives HP-IB commands (Remote, Listen, etc.) and control information (DCV, ACV, etc.) and sends measurement data through the HP-IB interface circuitry.

NOTE

HP-IB is Hewlett-Packard's implementation of IEEE Standard 488-1978, "Standard Digital Interface for Programmable Instrumentation" and ANSI MC 1.1.

8-22. The Front Panel interface circuitry provides communication between the User and the Master Processor. The processor receives control information through the front panel keyboard and returns measurement information through the front panel display.

8-23. Floating Common Section

8-24. The Floating Common section consists of Input Switching circuitry, an Input Amplifier, Ohms Current Source, AC to DC Convertor, Analog To Digital Convertor, Voltage Reference, Slave Processor, and Floating Common Isolation Logic.

8-25. The Input Switching section is responsible for routing the input signal to the proper measurement circuitry and connecting the Ohms Current Source when making resistance measurements. The input switching is also used during Auto-Cal and Self Test procedures to route stimulus and measurement signals.

8-26. The Input Amplifier scales the input signal to maintain a limited voltage range to the input of the Analog to Digital Convertor circuitry. The amplifier also provides isolation between the device being measured and the HP 3457A measurement circuitry.

8-27. The Ohms Current Source supplies a known current through resistors being measured to provide a proportional voltage which can be measured by the HP 3457A. The current source is also used as a stimulus during the Self Test routine.

8-28. The AC to DC Convertor is a computing true rms convertor which converts AC input signals between 20 Hz and 1 MHz to an equivalent DC voltage for measurement by the HP 3457A.

8-29. The Analog to Digital Convertor uses a multi-slope conversion process to convert the analog measurement data to digital information.

8-30. The Voltage Reference circuit, as the name implies, provides a stable voltage to the Analog to Digital Convertor and the Ohms Current Source for measurement reference.

8-31. The Slave Processor controls the measurement process. Function and range information received from the Master Processor is used to control the input switching and A/D convertor to make the required measurement. Measurement results are transferred from the slave processor to the master processor through the isolation circuitry.

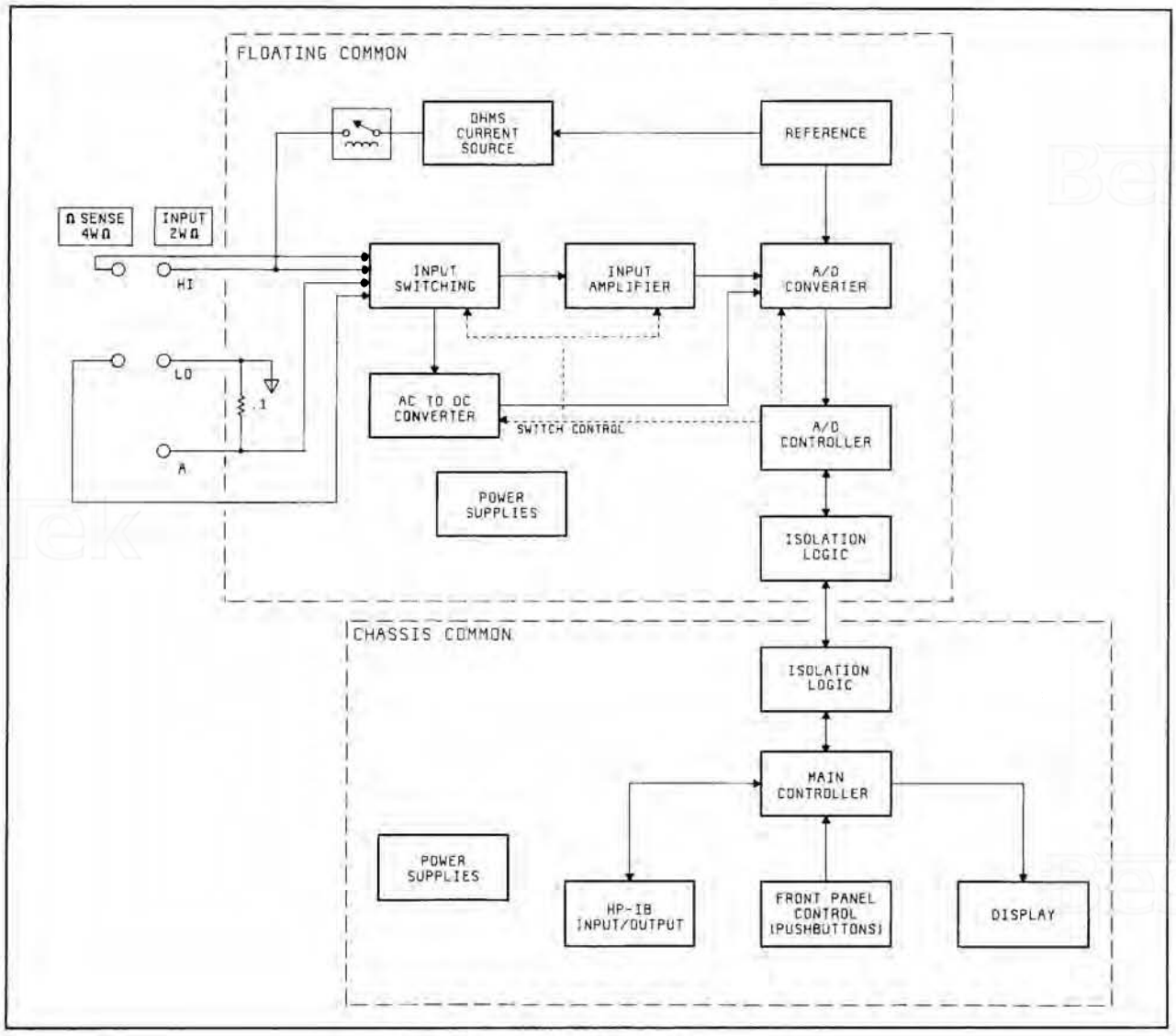

Figure 8-1. Simplified Block Diagram

8-32. SELF TEST DESCRIPTION

8-33. Power ON Sequence

8-34. When the HP 3457A is "turned-on", it automatically performs a self-test to check the logic of both the chassis common and floating common sections of the instrument. The areas tested are: the master processor, (A1 assembly), the slave processor (A2 assembly) and the isolation logic circuitry between the two assemblies. This test verifies that the instrument is capable of operating. It does not test the measurement accuracy of the instrument.

8-35. Upon satisfactory completion of the power-on test routine, the instrument momentarily displays the HP-IB address it is currently set to (The address is set to decimal 22 at the factory), emits a single "beep" and sets itself to the predefined power-on state. The front panel indications of this state are; the DC Voltage function, Auto-Range and automatic trigger are selected. For a complete list of power-on conditions, refer to Section III, Table 3-1 of this manual.

8-36. Self Test

8-37. The TEST routine performs an extensive test of the HP 3457A's measurement capability and accuracy. The tests performed are active tests, that is, a stimulus is applied and the results are checked against predefined limits. The TEST routine tests the integrator convergence, input amplifier and switching offset, ohms current source, input divider, input amplifier gain selection, amps circuit, ac/dc convertor offset and frequency response, and ohms precharge circuit.

8-38. Satisfactory completion of the self test routine is indicated by a display message of SELF TEST OK. If an error is detected, the display message will be TEST FAILED and the error annunciator will flash. When an error occurs, bit 0 in the ERROR register is set and information indicating the specific test(s) that failed is stored in the AUXERR register.

8-39.TROUBLESHOOTING

8-40. Introduction

8-41. The following procedures employ the Self Test capabilities of the HP 3457A. In most cases, this will be sufficient to determine which of the two sections (A1 Chassis Common Section or A2/A3 Floating Common Section) is at fault.

CAUTION

This instrument contains integrated circuits which are susceptible to failure due to static discharge. It is especially important that grounded tools and wrist straps be used when handling or troubleshooting these components.

8-42. A1 Assembly Failure Indications

8-43. If the front panel display remains blank or contains some unintelligible message and appears to be "locked-up" after the instrument is "turned-on," the fault is most probably located on the A1 assembly (03457-66501). If the display is blank, the power cord, fuse, and line select switches should be checked to be certain the instrument is receiving power. Connectors A1-J501, A1-J701 and A1-702 should be checked to be sure they properly and securely connected.

8-44. If the instrument works properly from the front panel but fails to communicate over the HP-IB, the problem is due to a faulty A1 assembly. Be certain that the interface cable is good and that it is securely connected between the HP 3457A and the controller when testing HP-IB communications.

8-45. If the display reads FAILED after the instrument is "turned-on," the fault is due to either a slave processor failure or an isolation logic circuit failure. Since the isolation logic circuit is located on both the A1 and A2 assemblies, the fault can not be isolated to one assembly.

8-46. A2/A3 Assembly Failure Indications 8-47. Failures in the floating common section of the instrument (A2/A3 assemblies) can be detected by running the TEST routine. A failure detected by the test routine will be indicated by a display of TEST FAILED and the error annunciator flashing. Not all errors require replacement of the A2/A3 assemblies to correct the problem. The test routine detects calibration errors as well as hardware errors.

8-48. To determine what failure occurred during the test, read the ERROR register *(Press the Blue SHIFT key then the ERROR key).* The error message should read HARDWARE ERROR. Other messages do not indicate a circuit failure. If the error annunciator is still flashing, read the other messages to clear the register. Read the AUXERR? register. *(Press the Blue SHIFT key then the NPLC / A configuration key. Use the ↓ scroll key to display the AUXERR? command and press the ENT key).* The display will show AUXERR?: and an error code number. The following is a complete list of the AUXERR? codes:

ERROR CODE	DESCRIPTION
1	Isolation error during operation in any mode (self-test, auto-cal, measurements, etc.)
2	Slave processor self test failure
4	Isolation self-test failure
8	Integrator convergence error
16	Front end zero measurement error
32	Current source, gain selection, input divider error
64	Amps self-test failure
128	AC amplifier DC offset test failure
256	AC flatness test error
512	Ohms precharge failure during auto-cal
1024	32k ROM checksum failure
2048	8k ROM checksum failure
4096	Non-volatile RAM failure
8192	Volatile RAM failure
16384	Calibration RAM protection failure

The error codes which apply to the TEST routine are numbered 16 through 512. If more than one test fails the error codes will be summed together. As an example: If the front end zero measurement test and the AC flatness test failed, the error code displayed would be 272 (256 + 16).

8-49. Front end zero measurement errors (error code 16) and AC flatness test errors (error code 256) can often be remedied by calibration. Refer to Section V for the appropriate procedures. Error codes 8, 32, 64, 128, and 512 normally indicate a component failure.

8-50. Replacement Procedures

8-51. Procedures for the removal and replacement of the PC assemblies are contained in Section VI of this manual. Please observe clean handling techniques and anti-static procedures when handling the PC assemblies.

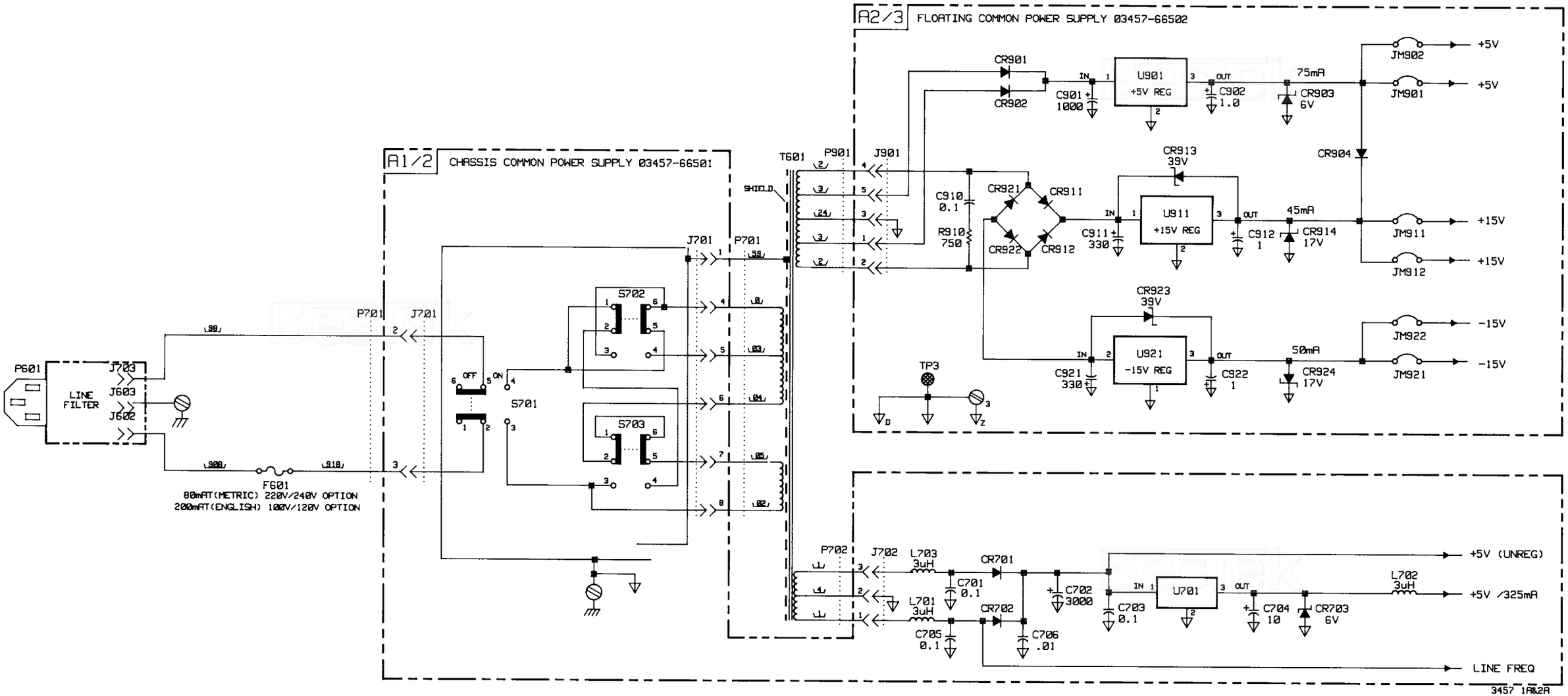

Figure 8-2. Power Supplies
8-7/8-8

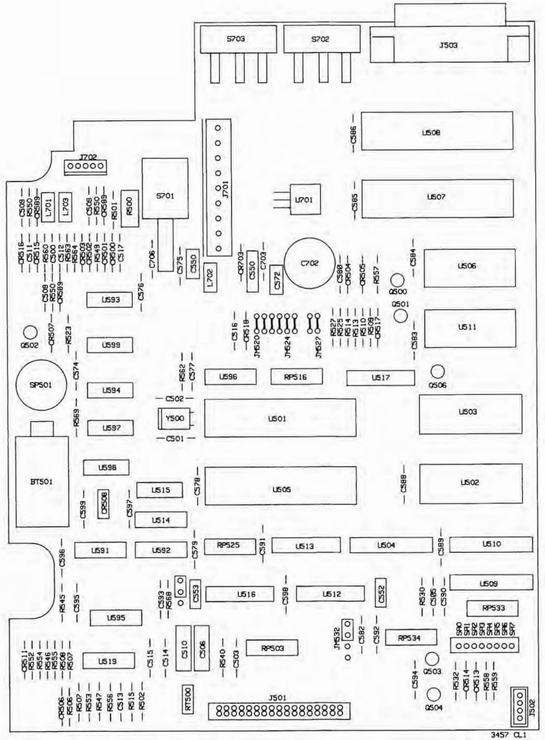

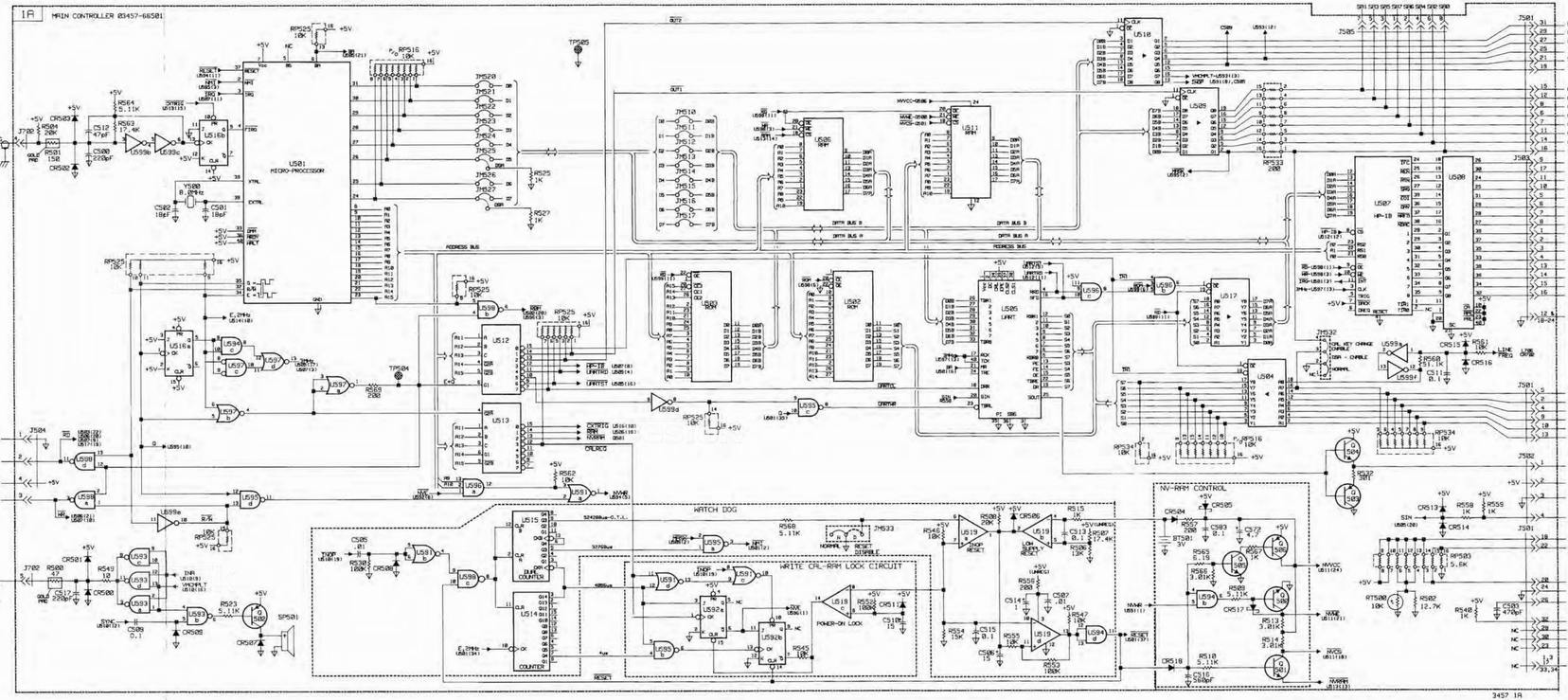

Figure 8-3. Main Controller
8-9/8-10

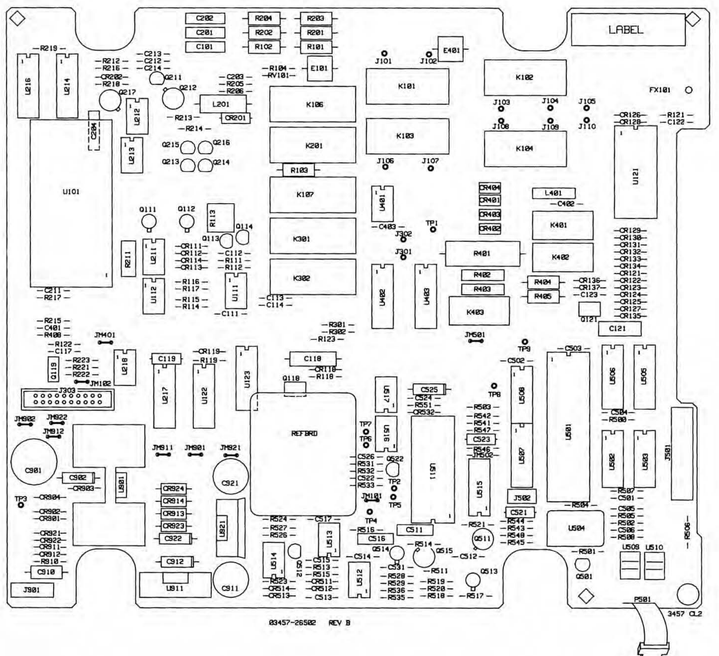

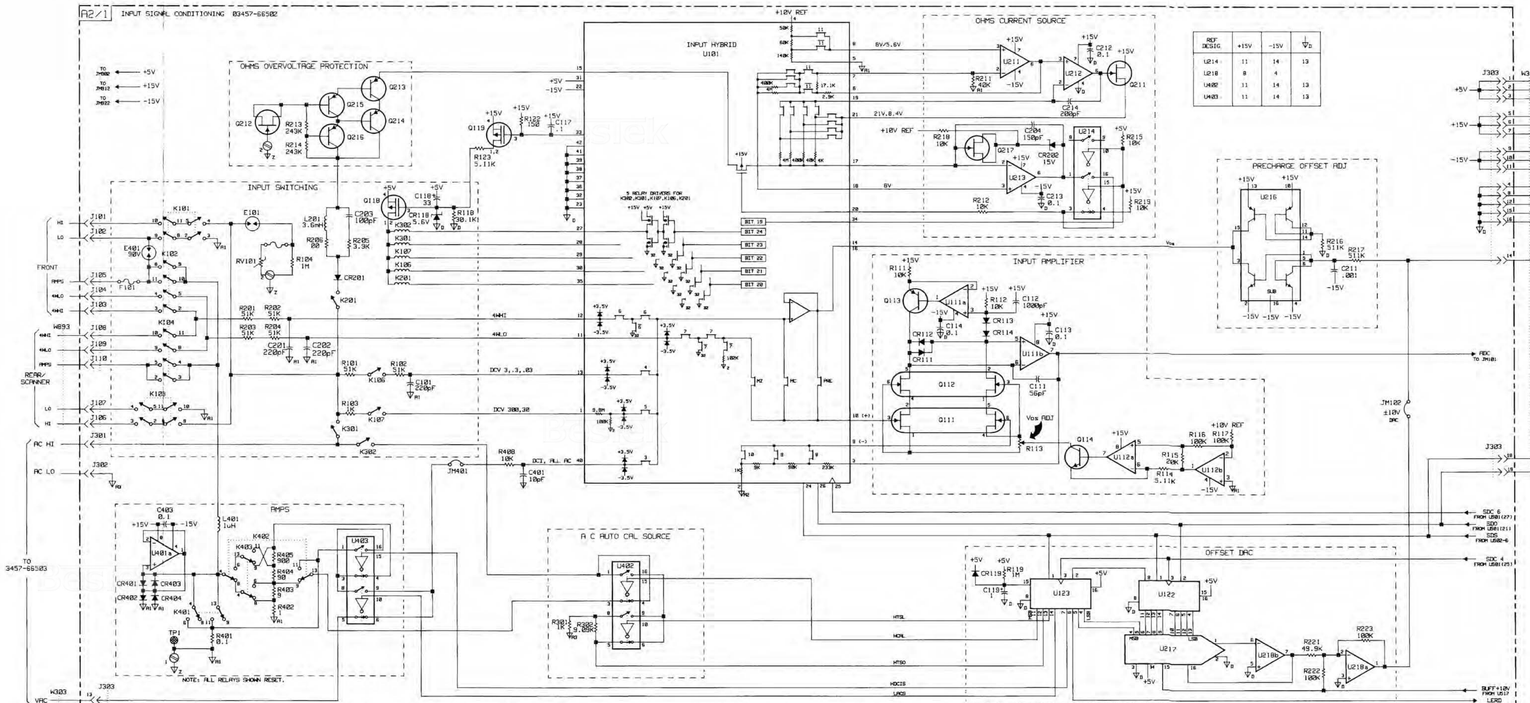

Figure 8-4. Input Circuitry
8-11/8-12

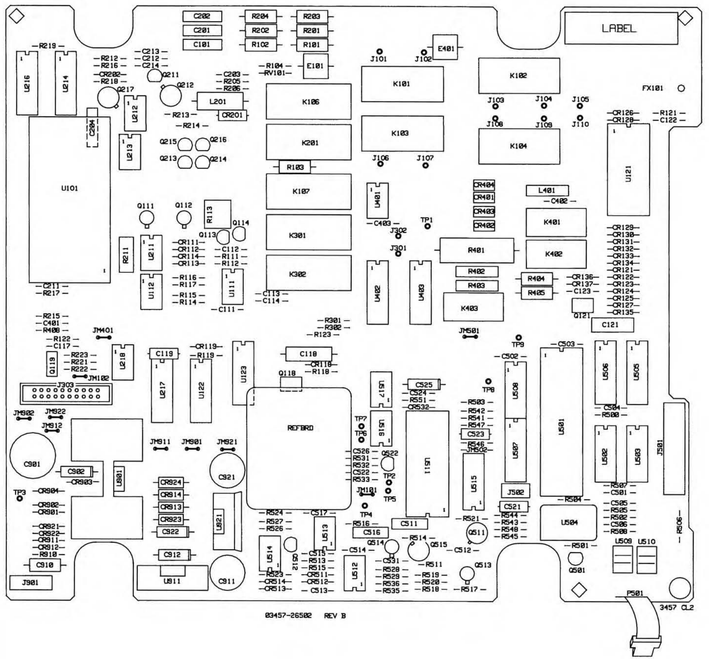

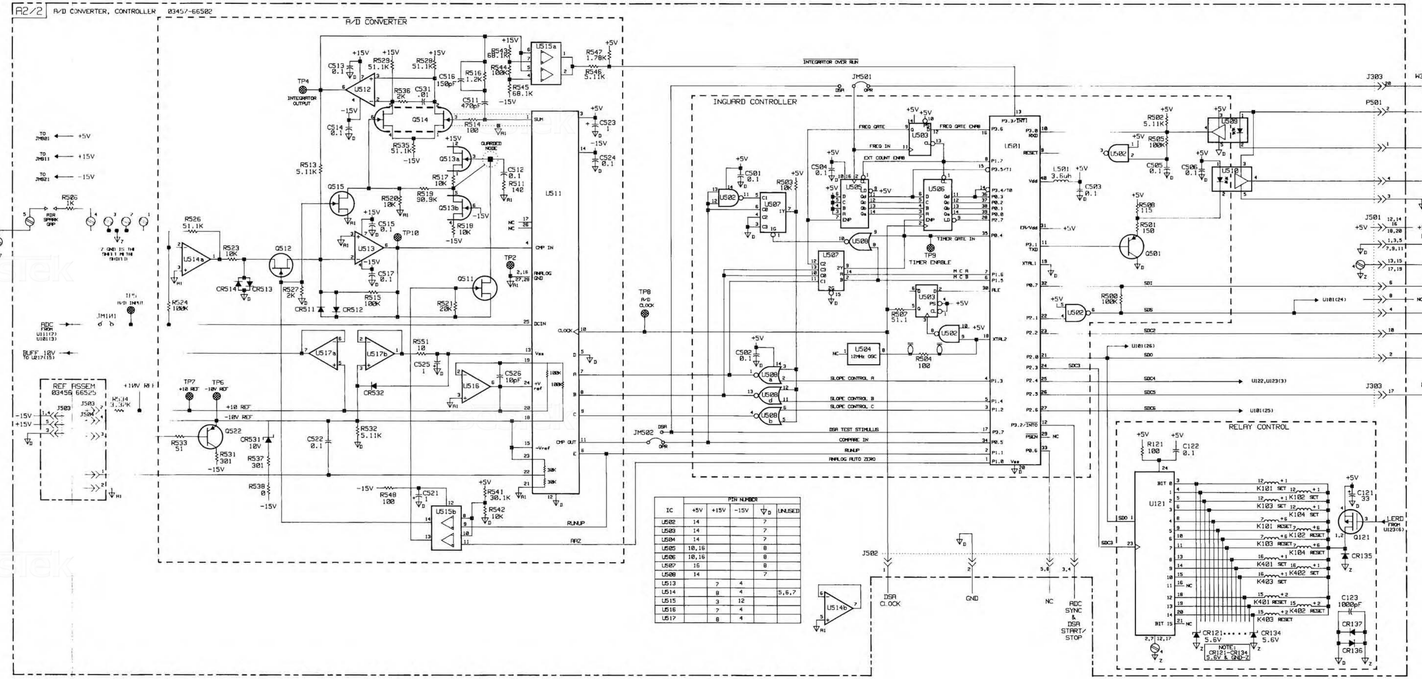

Figure 8-5. A/D Convertor - Analog Controller

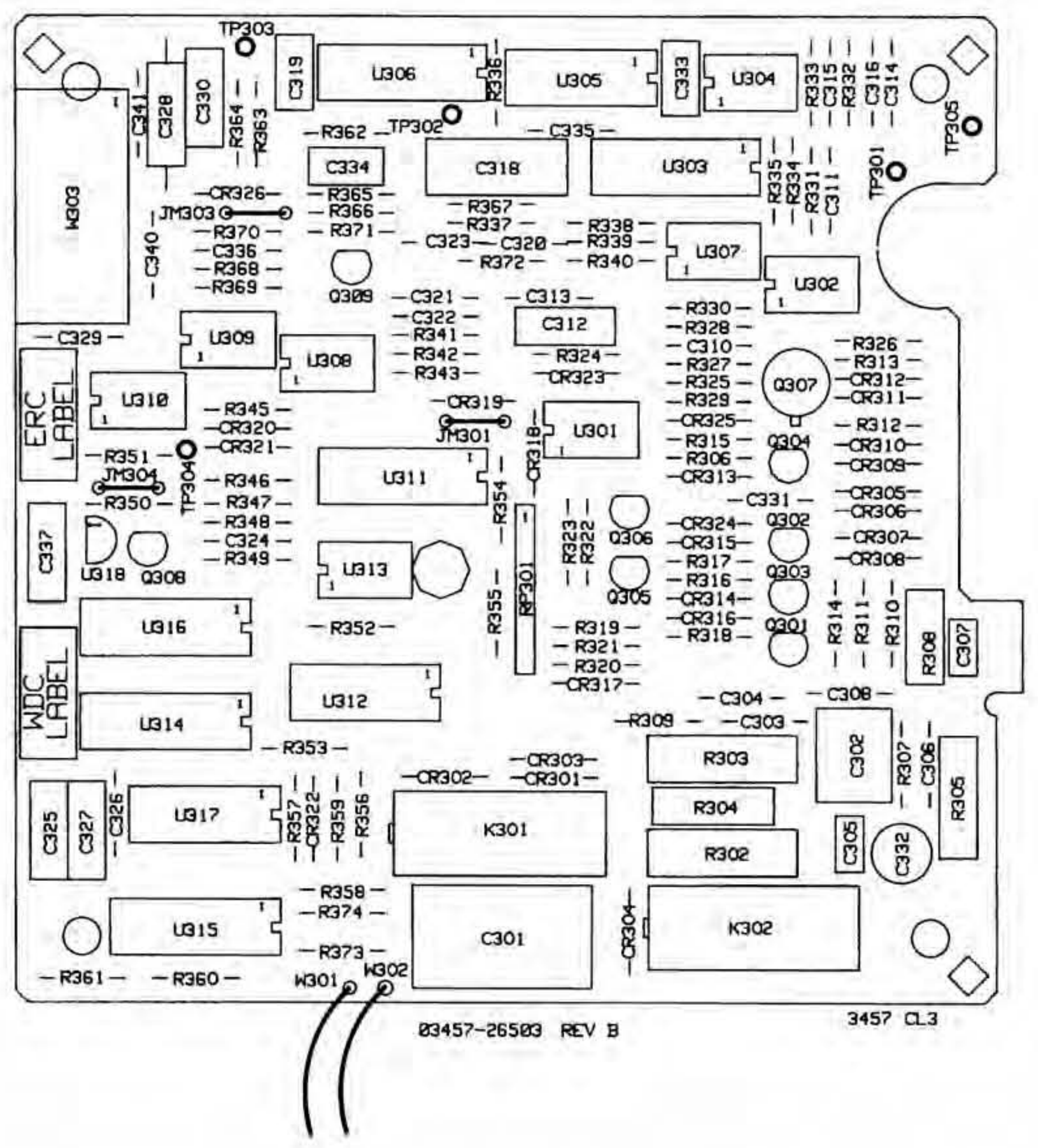

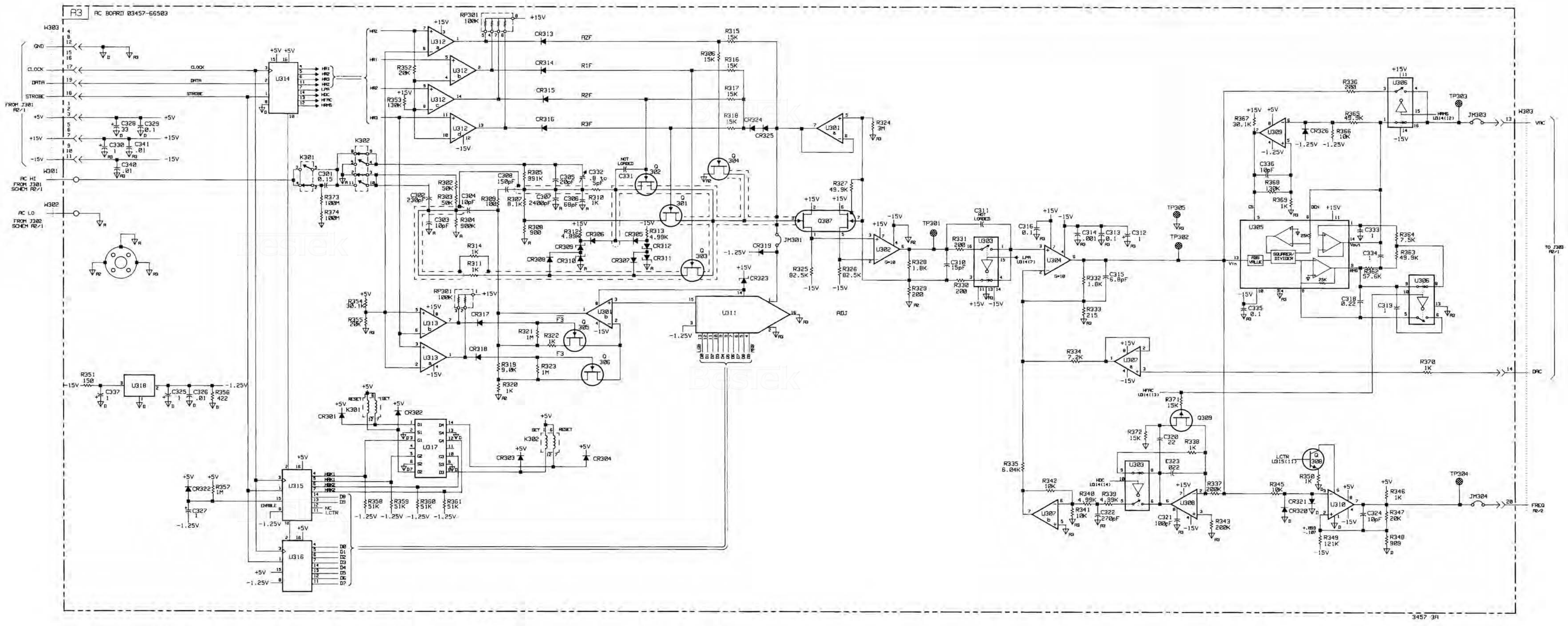

Figure 8-6. AC Converter

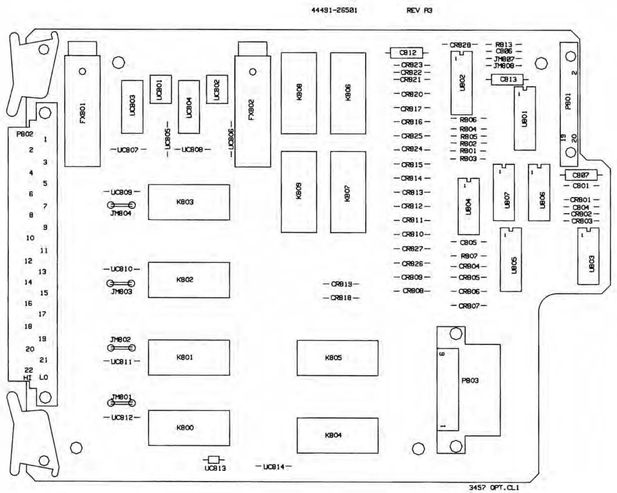

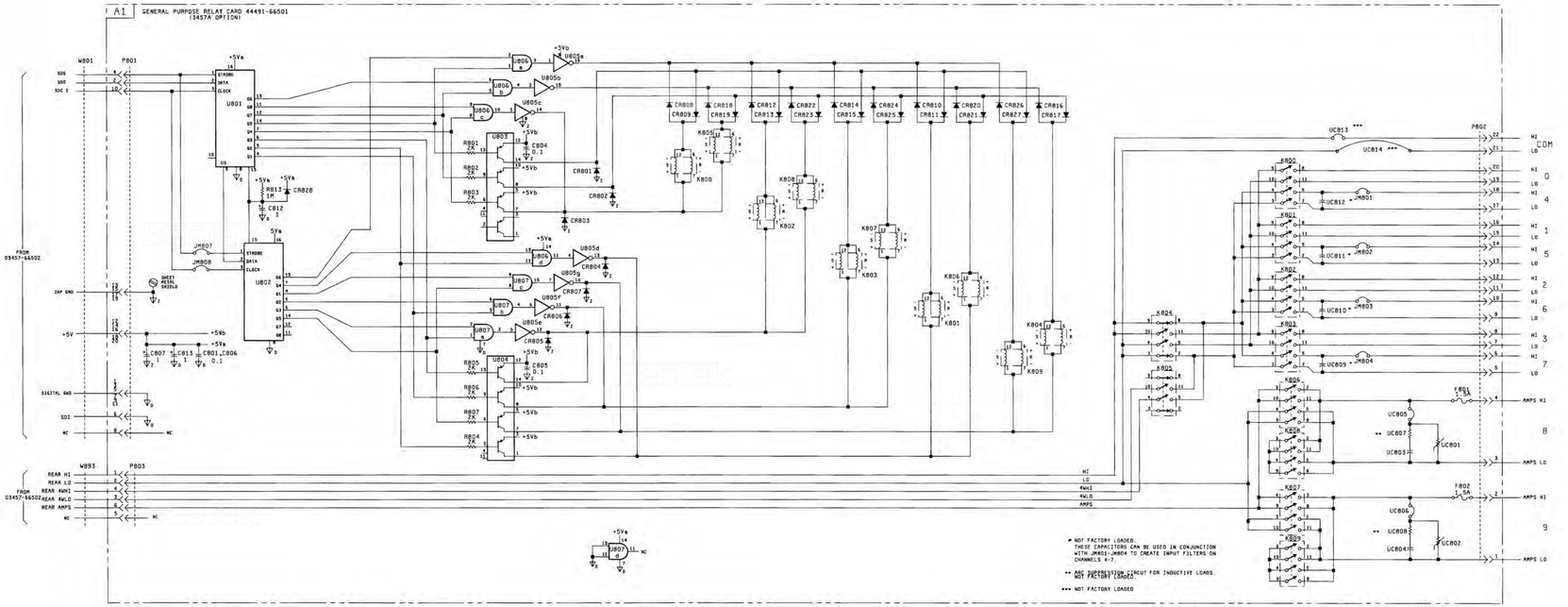

Figure 8-7. General Purpose Relay Card

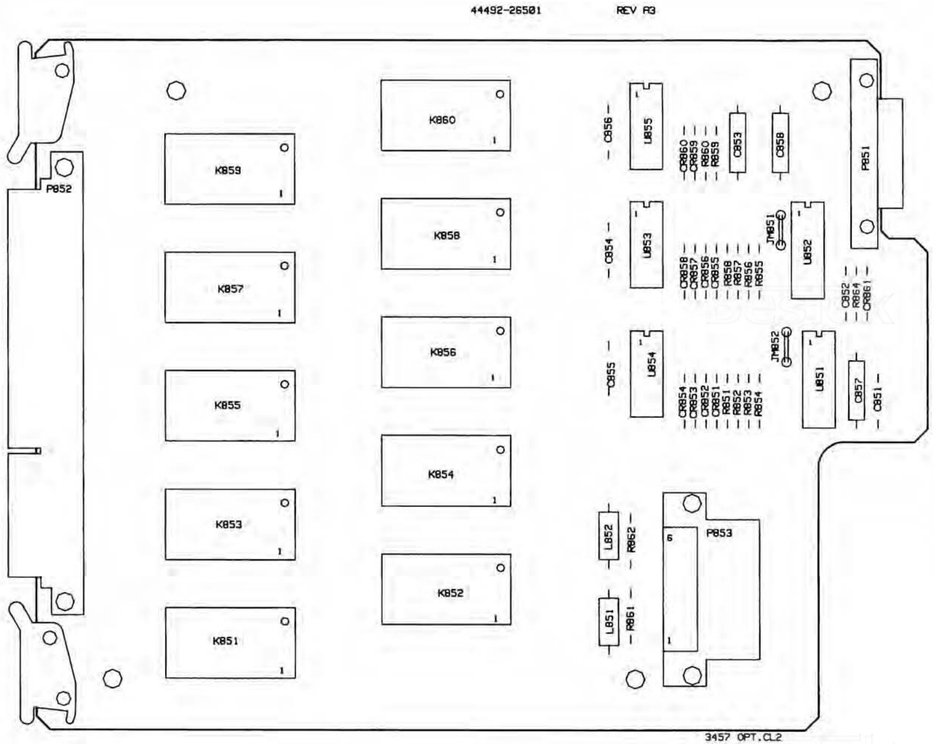

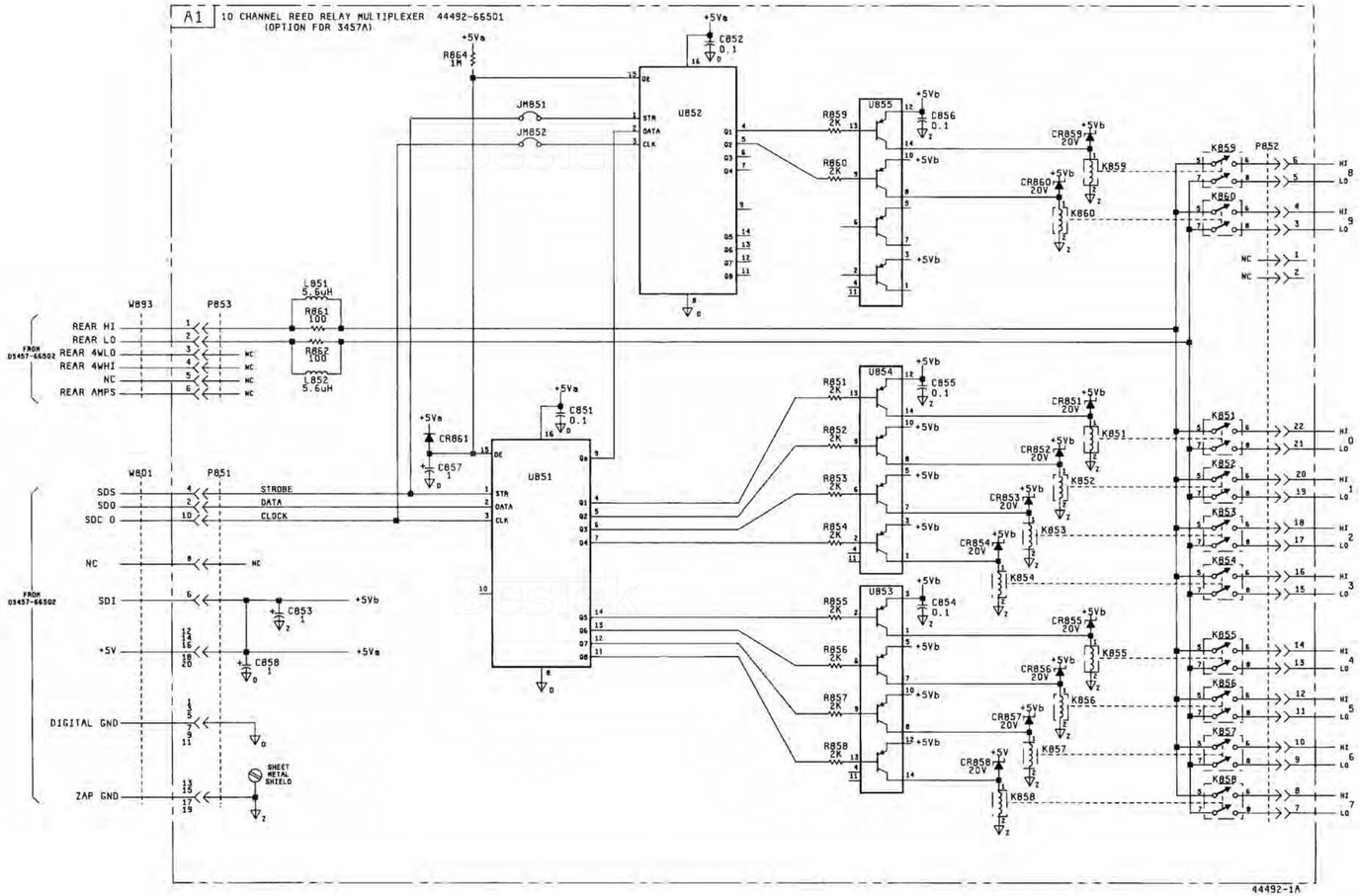

Figure 8-8. 10 Channel Reed Relay Multiplexer