EN User manual

Hob

USER MANUAL

ZEV6340XBA

ZANUSSI

Contents

Safety information _____ 2
Installation instructions _____ 2
Product description _____ 5
Operating instructions _____ 6
Helpful hints and tips _____ 7
Care and cleaning _____ 8
What to do if… _____ 8
Environment concerns _____ 9

Subject to change without notice.

⚠ Safety information

ⓘ For your safety and correct operation of the appliance, read this manual carefully before the installation and use. Always keep these instructions with the appliance also if you move or sell it. The users must fully know the operation and safety functions of the appliance.

Children and vulnerable people safety

⚠ **Warning!** Do not let persons, children included, with reduced physical sensory, reduced mental functions or lack of experience and knowledge to use the appliance. They must have supervision or instruction for the operation of the appliance by a person who is responsible for their safety.

- Keep all packaging away from children. There is the risk of suffocation or injury.
- Keep the children away from the appliance during and after the operation, until the appliance is cold.

⚠ **Warning!** Activate the child safety device to prevent small children and pets from an accidental activation of the appliance.

Safety during operation

- Remove all packaging, stickers and layers from the appliance before the first use.
- Set the cooking zones to "off" after each use.
- The Risk of burns! Do not put cutlery or saucepan lids on the surface that you cook, as they can become hot.

⚠ **Warning! Fire risk!** Too hot fats and oils can occur with ignition very quickly.

Correct operation

- Always monitor the appliance during operation.
- The appliance is only for domestic use!
- Do not use the appliance as a work or a storage surface.
- Do not put or keep very flammable liquids and materials, easy fusible objects (made of plastic or aluminium) on or near the appliance.
- Be careful when you connect the appliance to the near sockets. Do not let the electricity bonds touch the appliance or hot cookware. Do not let the electricity bonds to tangle.

How to prevent a damage to the appliance

- If the objects or cookware fall on the glass ceramic, the surface can be damaged.
- Cookware made of cast iron, cast aluminium or with damaged bottoms can cause scratch of the glass ceramic. Do not move them on the surface.
- Do not let cookware boil dry to prevent the damage to cookware and glass.
- Do not use the cooking zones with empty cookware or without cookware.
- Do not put the aluminium foil on the appliance.

⚠ **Warning! If there is a crack on the surface, disconnect power supply to prevent the electrical shock.**

Installation instructions

ⓘ **Before the installation**, note down the serial number (Ser. Nr.) from the rating plate.**The rating plate of the appliance is on its lower casing.**

Modell ZEV6340XBA		Prod.Nr. 949 595 510 00
Typ 58 HAD 54 AO	220-240 V 50-60 Hz	
Made in Germany	Ser.Nr.	6,5 kW
ZANUSSI		

The Safety Instructions

⚠ **Warning!** You must read these!

- Make sure that the appliance is not damaged because of transportation. Do not connect a damaged appliance. If it is necessary, speak to the supplier.
- Only an authorized servicing technician can install, connect or repair this appliance. Use only original spare parts.
- Only use the built-in appliances after you assemble the appliance into correct built-in units and work surfaces that align to the standards.
- Do not change the specifications or change this product. Risk of injury and damage to the appliance.
- Fully obey the laws, ordinances, directives and standards in force in the country where you use the appliance (safety regulations, recycling regulations, electrical safety rules etc.)!
- Keep the minimum distances to other appliances and units!
- Install shock protection, for example install the drawers only with a protective floor directly below the appliance!
- Keep safe the cut surfaces of the worktop from moisture with a correct sealant!
- Seal the appliance to the work top with no space between with a correct sealant!
- Keep safe the bottom of the appliance from steam and moisture, e.g. from a dishwasher or oven!
- Do not install the appliance adjacent to doors and below windows! If not, when you open the doors or windows they can push off hot cookware from the appliance.

⚠ **Warning!** Risk of injury from electrical current. Carefully obey the instructions for electrical connections.

- The electrical mains terminal is live.
- Make electrical mains terminal free of voltage.
- Install correctly to give shock protection.
- Loose and incorrect plug and socket connections can make the terminal become too hot.
- A qualified electrician must install the connections in the clamps correctly.
- Use a strain relief clamp on cable.
- Use the correct mains cable of type H05BB-F Tmax 90°C (or higher) for a single phase or two phase connection.
- Replace the damaged mains cable with a special cable (type H05BB-F Tmax 90°C; or higher). Speak to your local Service Centre.

The appliance must have the electrical installation which lets you disconnect the appliance from the mains at all poles with a contact opening width of minimum 3 mm. You must have correct devices to isolate: line protecting cut-outs, fuses (screw type fuses removed from the holder), earth leakage trips and contactors.

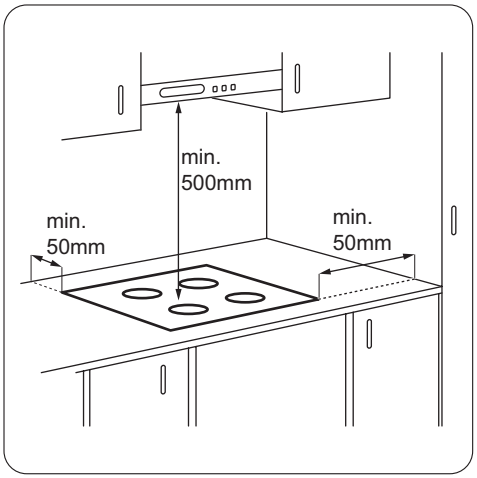
min.
500mm
min.
50mm
min.
50mm

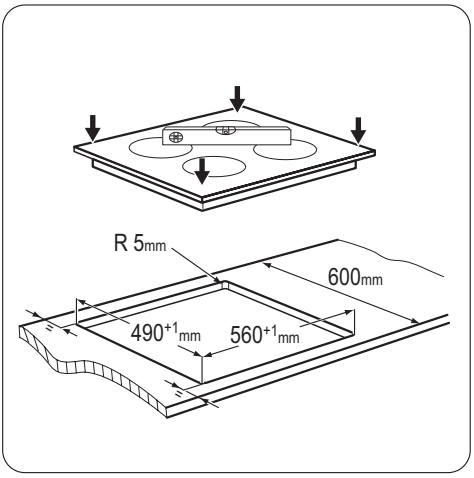
R 5mm
600mm
490+1mm
560+1mm

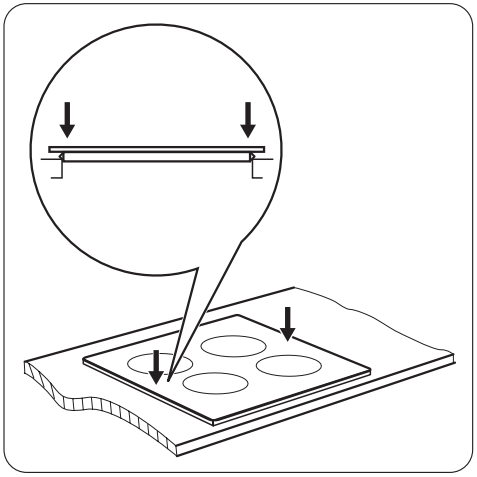

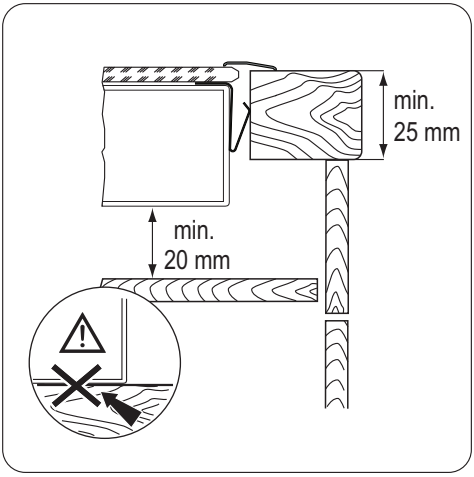
min.
25 mm
min.
20 mm

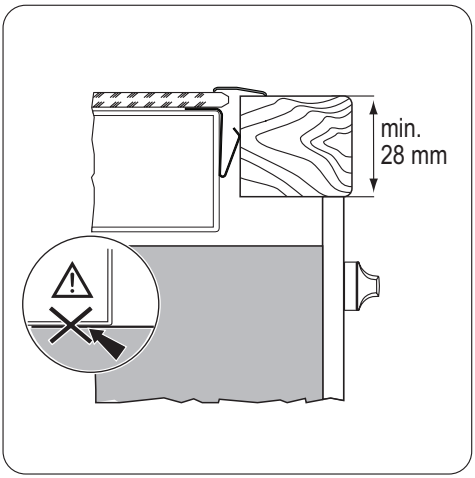

If you use a protection box (the additional accessory[1)]), the protective floor directly below the appliance is not necessary.
You can not use the protection box if you install the appliance above an oven.

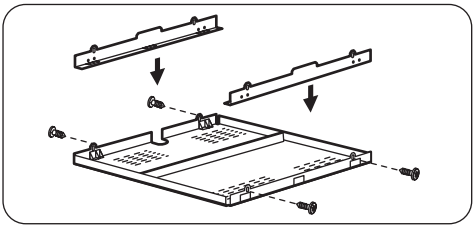

Product description

General overview

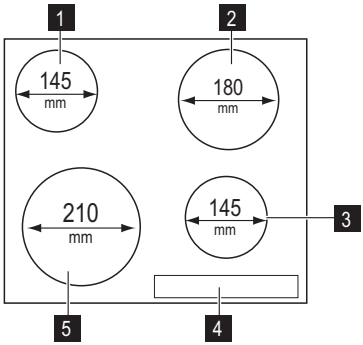

1 Cooking zone 1200 W
2 Cooking zone 1800 W
3 Cooking zone 1200 W
4 Control panel
5 Cooking zone 2300 W

1) The protection box accessory may not be available in some countries. Please contact your local supplier.

Control panel layout

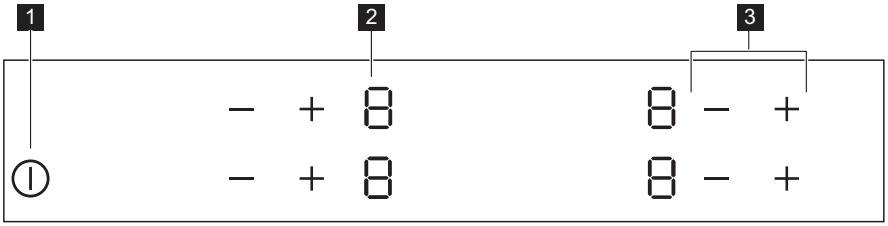

Use the sensor fields to operate the appliance. The displays and indicators tell which functions operate.

	sensor field	function
1	⏻	It activates and deactivates the appliance.
2	Heat setting display	It shows the heat setting.
3	+ / −	It increases or decreases the heat settings.

Heat setting displays

Display	Description
0	The cooking zone is deactivated.
1 - 9	The cooking zone operates.
E	There is a malfunction.
H	A cooking zone stay hot (residual heat).
L	Lock/The Child safety device operates.
-	The Automatic Switch Off operates.

Residual heat indicator

⚠ **Warning!** H The risk of burns from residual heat!

Operating instructions

Activation and deactivation

Touch ⏻ for 1 second to activate or deactivate the appliance.

Automatic Switch Off

The function stops the hob automatically if:

- all cooking zones are off 0 .
- you do not set the heat setting after you start the hob.
- you cover a sensor field with an object (a pan, a cloth, etc.) for longer than 10 seconds. Remove the object or clean the control panel.
- you do not stop a cooking zone or change the heat setting after some time. See the table. - comes on.

Automatic Switch Off times

Heat setting	1 - 2	3 - 4	5	6 - 9
Stops after	6 hours	5 hours	4 hours	1.5 hours

The heat setting

Touch + to increase the heat setting. Touch — to decrease the heat setting. The display shows the heat setting. Touch + and — at the same time to deactivate the cooking zone.

The child safety device

This function prevents an accidental operation of the appliance.

To activate the child safety device

- Activate the appliance with ⏻. **Do not set the heat settings**.
- Touch — of the two front cooking zones for 4 seconds. The symbol L comes on.
- Deactivate the appliance with ⏻.

To deactivate the child safety device

- Activate the appliance with ⏻. **Do not set the heat settings**. Touch — of the two front cooking zones for 4 seconds. The symbol L comes on.
- Deactivate the appliance with ⏻.

To override the child safety device for only one cooking time

- Activate the appliance with ⏻. The symbol L comes on.
- Touch — of the two front cooking zones for 4 seconds. **Set the heat setting in 10 seconds.** You can operate the appliance.
- When you deactivate the appliance with ⏻, the child safety device operates again.

Helpful hints and tips

Cookware

- The bottom of the cookware must be as thick and flat as possible.
- Cookware made of enamelled steel and with aluminium or copper bottoms can cause the color change on the glass-ceramic surface.

Energy saving

- If it is possible, always put the lids on the cookware.
- Put cookware on a cooking zone before you start it.
- Stop the cooking zones before the end of the cooking time to use residual heat.
- The bottom of pans and cooking zones must have the same dimension.

The Examples of cooking applications

The data in the table is for guidance only.

Heat setting	Use to:	Time	Hints
1	Keep warm the food you cooked	as required	Put a lid on a cookware
1-2	Hollandaise sauce, melt: butter, chocolate, gelatine	5-25 min	Mix from time to time
1-2	Solidify: fluffy omelettes, baked eggs	10-40 min	Cook with a lid on

Heat setting	Use to:	Time	Hints
2-3	Simmer rice and milkbased dishes, heating up ready-cooked meals	25-50 min	Add the minimum twice as much liquid as rice, mix milk dishes part procedure through
3-4	Steam vegetables, fish, meat	20-45 min	Add some tablespoons of liquid
4-5	Steam potatoes	20-60 min	Use max. ¼ l water for 750 g of potatoes
4-5	Cook larger quantities of food, stews and soups	60-150 min	Up to 3 l liquid plus ingredients
6-7	Gentle fry: escalope, veal cordon bleu, cutlets, rissoles, sausages, liver, roux, eggs, pancakes, doughnuts	as necessary	Turn halfway through
7-8	Heavy fry, hash browns, loin steaks, steaks	5-15 min	Turn halfway through
9	Boil large quantities of water, cook pasta, sear meat (goulash, pot roast), deep-fry chips		

Information on acrylamides

Important! According to the newest scientific knowledge, if you brown food (specially the one which contains starch), acrylamides can pose a health risk. Thus, we recommend that you cook at the lowest temperatures and do not brown food too much.

Care and cleaning

Clean the appliance after each use.
Always use cookware with clean bottom.

⚠ **Warning!** The sharp objects and abrasive cleaning agents can cause damage to the appliance.
For your safety, do **not** clean the appliance with steam cleaners or high-pressure cleaners.

ⓘ Scratches or dark stains on the glass-ceramic cause no effect on how the appliance operates.

To remove the dirt:

1. – **Remove immediately:** melted plastic, plastic foil, and food with sugar. If not, the dirt can cause damage to the appliance. Use a special scraper for the glass . Put the scraper on the glass surface at an acute angle and move the blade on the surface .
   – **Remove after the appliance is sufficiently cool:** limescale rings , water rings, fat stains, shiny metallic discolorations. Use a special cleaning agent for glass ceramic or stainless steel.
2. Clean the appliance with a moist cloth and some detergent.
3. At the end **rub the appliance dry with a clean cloth.**

What to do if…

Problem	Possible cause and remedy
You cannot activate the appliance or operate it.	• Activate the appliance again and set the heat setting in 10 seconds. • You touched 2 or more sensor fields at the same time. Only touch one sensor field. • The Child Safety Device operates. See the chapter Operating instructions. • There is water or fat stains on the control panel. Clean the control panel.

Problem	Possible cause and remedy
The appliance deactivates.	You put something on the ⏻ . Remove the object from the sensor field.
The residual heat indicator does not comes on.	The cooking zone is not hot because it operated only for a short time. If the cooking zone should be hot, speak to the service centre.
The sensor fields become hot.	The cookware is too large or you out it too near to the controls. Put large cookware on the rear cooking zones if it is necessary.
[-] comes on	The Automatic Switch Off operates. Deactivate the appliance and activate it again.
[E] and number comes on.	There is an error in the appliance. Disconnect the appliance from the electrical supply for some time. Disconnect the fuse from the electrical system of the house. Connect again. If [E] comes on again, speak to the service centre.

If you tried the above solutions and cannot repair the problem, speak to your dealer or the customer service. Give the data from the rating plate, three digit letter code for the glass ceramic (it is in the corner of the glass surface) and an error message that comes on.

Make sure, you operated the appliance correctly. If not the servicing by a customer service technician or dealer will not be free of charge, also during the warranty period. The instructions about the customer service and conditions of guarantee are in the guarantee booklet.

Environment concerns

The symbol on the product or on its packaging indicates that this product may not be treated as household waste. Instead it should be taken to the appropriate collection point for the recycling of electrical and electronic equipment. By ensuring this product is disposed of correctly, you will help prevent potential negative consequences for the environment and human health, which could otherwise be caused by inappropriate waste handling of this product. For more detailed information about recycling of this product, please contact your local council, your household waste disposal service or the shop where you purchased the product.

Packaging material

The packaging materials are friendly to the environment and can be recycled. The plastic components are identified by marking: >PE<,>PS<, etc. Discard the packaging materials as household waste at the waste disposal facilities in your municipality.



www.zanussi.com/shop



CE

892951929-A-462011