TOHO ELECTRONICS INC.

Operation Manual, Communications

(TOHO protocol and MODBUS)

Model : TTM-000 Series
Designation : Digital Controller

Thank you very much for purchasing a TTM-000 Series (with communications). Please read this operation manual carefully and use this product correctly.

Contents

1. Before using the product 4
   - 1.1 On this operation manual
   - 1.2 Conditions for communications
   - 1.3 What can be done with communications
   - 1.4 Positioning communications (priority ranking)
   - 1.5 Setting before communications

2. Settings regarding TOHO communications 5
   - 2.1 Overview
   - 2.2 Setting a data length
   - 2.3 Setting a stop bit length
   - 2.4 Setting a parity
   - 2.5 Setting whether to conduct a BCC check
   - 2.6 Setting a communications speed
   - 2.7 Setting an address
   - 2.8 Setting a response delay
   - 2.9 Switching communications mode

3. TOHO communications control 8
   - 3.1 Communications procedure
   - 3.2 Message types
   - 3.3 Composition of a request message (transmitted from a high-level computer to this product)
   - 3.4 Composition of a response message (transmitted from this product to a high-level computer)
   - 3.5 Description of codes
   - 3.6 Communications precautions

4. Examples of TOHO communications 15
   - 4.1 Examples of communications to be read
   - 4.2 Examples of communications to be written

5. Settings regarding MODBUS communications 17
   - 5.1 Overview
   - 5.2 Setting a data length
   - 5.3 Setting a stop bit length
   - 5.4 Setting a parity
   - 5.5 Setting a BCC check
   - 5.6 Setting a communications speed
   - 5.7 Setting an address
   - 5.8 Setting a response delay
   - 5.9 Switching communications mode

6. MODBUS communications control 20
6.1 Communications procedure
6.2 Message types
6.3 Composition of an RTU request message (transmitted from a high-level computer to this product)
6.4 Composition of an RTU response message (transmitted from this product to a high-level computer)
6.5 Description of RTU codes
6.6 Precautions on RTU communications
6.7 Example of CRC-16 calculations
6.8 Composition of an ASCII request message (transmitted from a high-level computer to this product)
6.9 Composition of ASCII response messages (transmitted from this product to a high-level computer)
6.10 Description of ASCII codes
6.11 Precautions on ASCII communications
6.12 Example of LRC calculations

7. Specifications 35
7.1 Communications standard category
7.2 Communications specifications

8. Connections 36

9. Table of identifiers (codes) 38

10. Table of ASCII codes 41

1. Before using the product

1.1 On this operation manual

This is an operation manual regarding communications with a TTM-000 Series (hereinafter referred to as "this product").

1.2 Conditions for communications

The communications function of this product is optionally specified. For that reason, you should specify a communications option (RS-485) in purchasing this product.

1.3 What can be done with communications

With this product, users can write and read items specified in "9. Table of identifiers (codes)," such as "reconfiguring, starting, or stopping items that are operable with the front keys" and "reading information displayable on the display."

However, reading and writing with ordinary commands are performed with regarding to the RAM in this product. Written data can be turned back into the values before the writing (the values stored on the EEPROM) by turning power off and on again. To store the written data on the EEPROM of this product, execute a store request message. (See "Communications precautions." in chapter 3.6, 6.6 and 6.11.)

Settings regarding options not added and other unnecessary settings cannot be read or written.

1.4 Positioning communications (priority ranking)

Data and parameters in this product can be changed with keys while in operation in the communications mode.

While this product is in operation in the RO (read-only) mode, no data or parameter setting can be changed by communications. (Provided that communications modes can be changed.)

1.5 Setting before communications

Before performing communications, this product must be set. See "2. Settings regarding TOHO communications" and "5. Settings regarding MODBUS communications."

2. Settings regarding TOHO communications

2.1 Overview

Before communications is performed, initial settings must be made on this product. Enter such settings with the keys on the front panel.

To switch to a series of setting screens, take the steps described below.

For details, see the operation manual furnished with this product.

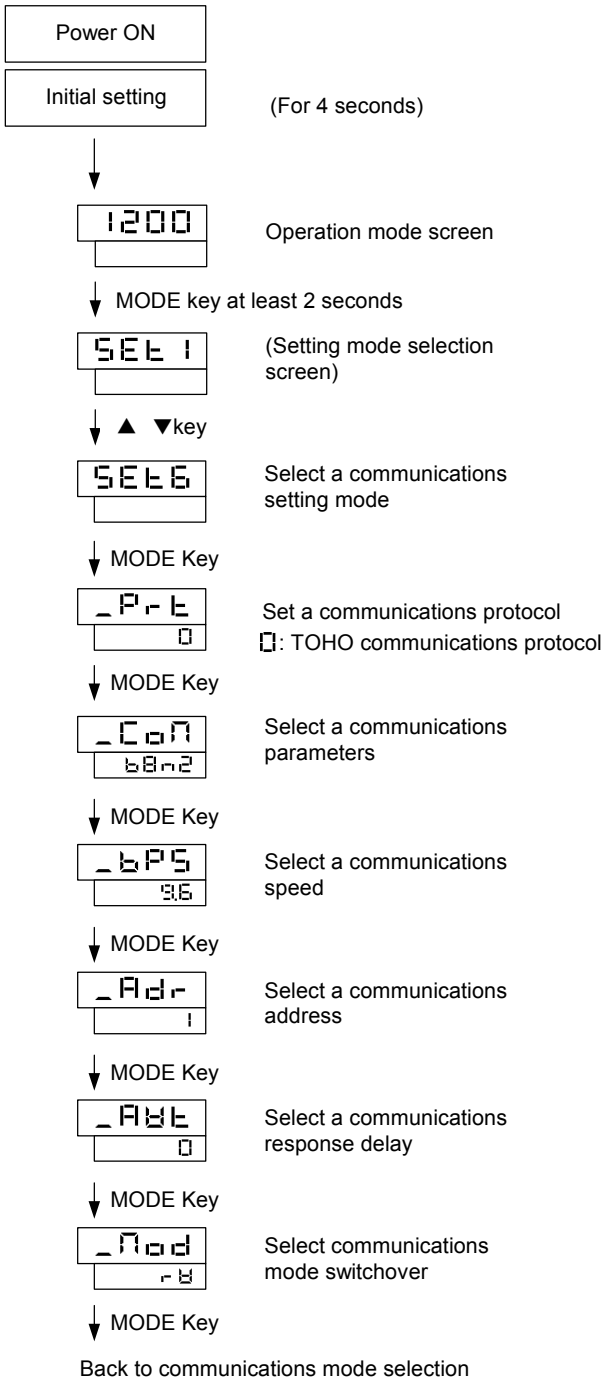

When the settings are over, press the MODE key at least 2 seconds to go back to the operation mode. The parameters indicated above are initial values.

2.2 Setting a data length

2.3 Setting a stop bit length

2.4 Setting a parity

2.5 Setting whether to conduct a BCC check

While in the "Set a communications parameter" screen on the preceding page, operate the ▲ and ▼ keys to make the settings. The initial value is 8n2.

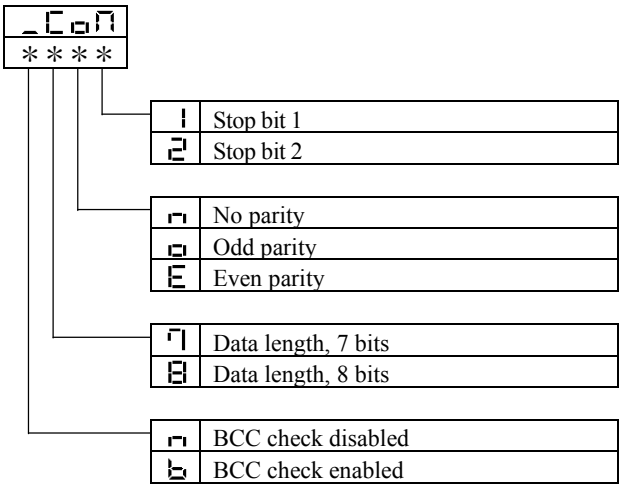

2.6 Setting a communications speed

While in the "Set a communications speed" screen on the preceding page, operate the ▲ and ▼ keys to make the settings. The initial value is 9.6.

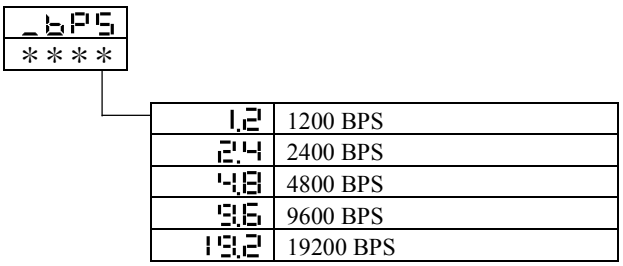

2.7 Setting an address

While in the "Set a communications address" screen on the preceding page, operate the ▲ and ▼ keys to make the settings. The initial value is 1.

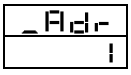

Setting range: 1 to 99 stations (It cannot be set to a 0.)

2.8 Setting a response delay

Set a time from the time when the high-level computer finished sending a "request message" until the time when it delivers the line and enters an input state.

While in the "Set a response delay" on the preceding page, operate the ▲ and ▼ keys to make the settings. The initial value is 0.

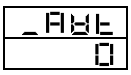

Setting range: 0 to 250msec

* If the response delay is set to a short setting, the communications may not be conducted normally.
* In a real operation, the processing time for this product will be added, in addition to the response delay.

2.9 Switching communications mode

While in the "Set communications mode switchover" screen on the preceding page, operate the ▲ and ▼ keys to make the settings.

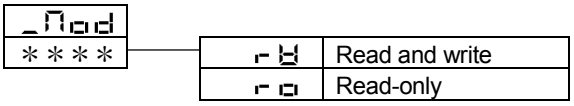

3. TOHO communications control

3.1 Communications procedure

This product returns a "response message" in response to a "request message" from a high-level computer. It therefore does not initiate a transmission.

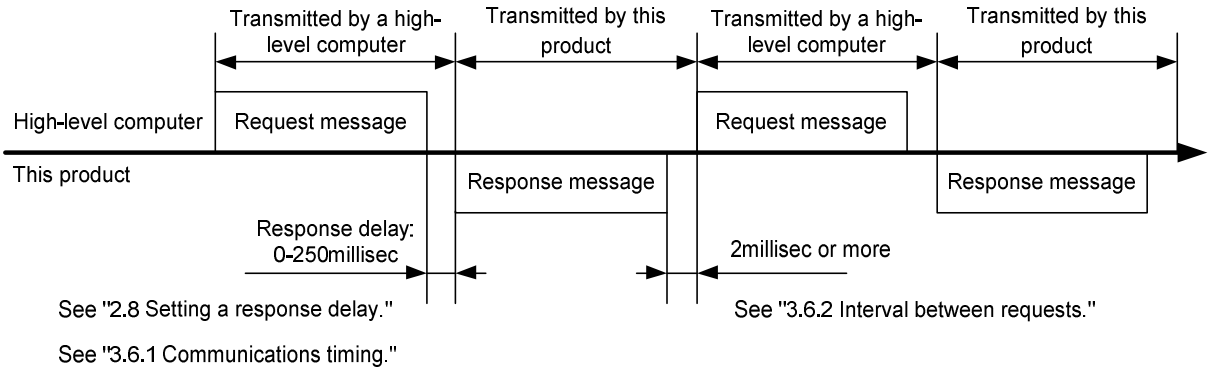

3.2 Message types

■ Messages are roughly divided into the following types:

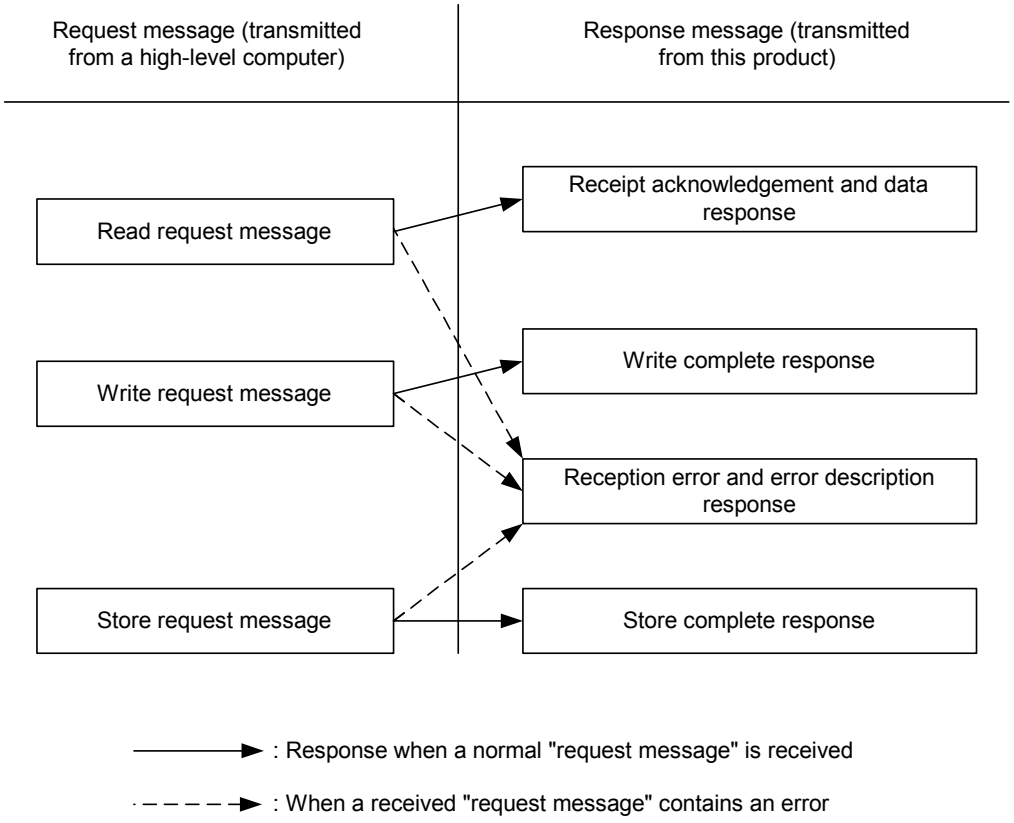

■ All codes (except for BCC) from STX and data to ETX are expressed in ASCII codes.

■ In assembling a program for a high-level computer, see "9. Table of identifiers (codes)" and "10. Table of ASCII codes" at the end of the book.

3.3 Composition of a request message
(transmitted from a high-level computer to this product)

- For codes ① to ⑩, see "3.5 Description of codes."
- For specific examples of request messages, see "4.1 Examples of communications to be read" and "4.2 Examples of communications to be written."

3.3.1 Composition of a read request message

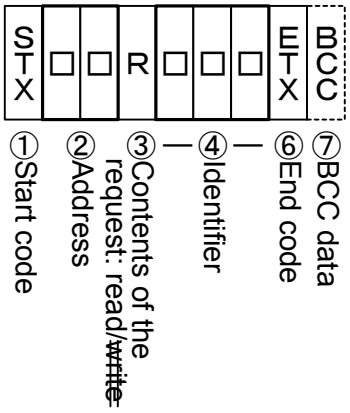

3.3.2 Composition of a write request message

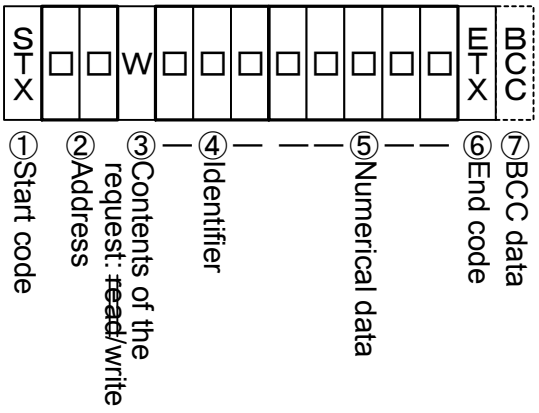

3.3.3 Composition of a store request message

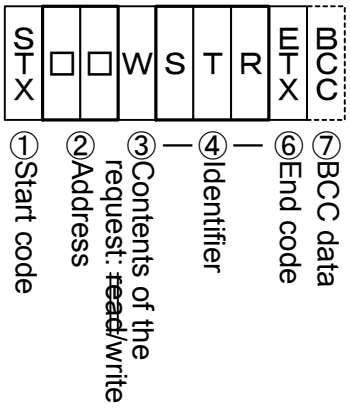

3.4 Composition of a response message (transmitted from this product to a high-level computer)

- For codes ① to ⑩, see "3.5 Description of codes."
- For specific examples of request messages, see "4.1 Examples of communications to be read" and "4.2 Examples of communications to be written."

3.4.1 Response message in response to a read request message

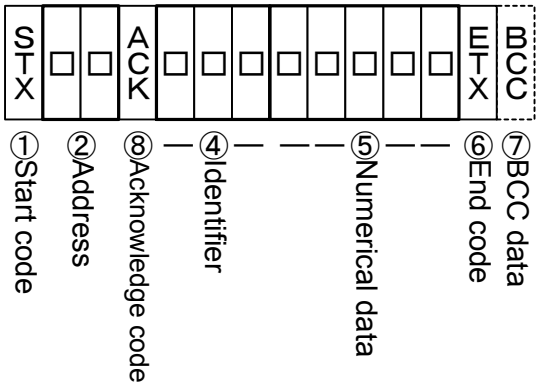

3.4.2 Response message in response to a write/store request message

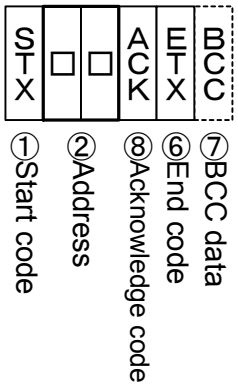

3.4.3 Response message in the case of an error

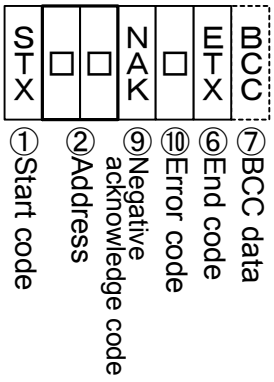

3.5 Description of codes

- The codes from ① STX, ② address to ⑩ ERR type as indicated below are expressed in ASCII codes.
- For the ASCII codes, see "10. Table of ASCII codes."
- For conversion to ASCII codes, see "4. Examples of TOHO communications."

① STX

This code is needed for the receiver to detect the top of the message. It is affixed to the top of a character string to be sent.

② Address

This is the address of the party (this product) with whom a high-level computer communicates. The address in the response message from this product indicates the sender of the response message.

③ Contents requested

Enter a code R or W.

R: to read data from this product

W: to write or store data in this product

④ Identifier

An identifier is a classification code (identifier) for data to be read or written and expressed in a three-digit alphanumerical ASCII code. See "9. Table of identifiers (codes)."

⑤ Numerical data

These are data to be read or written, and are all expressed in five digits regardless of the type.

Negative data: The "-" (minus) sign is in a single digit at the largest digit.

Position of the decimal point: 5-digit data does not include a decimal point.

Example: The table below indicates the significances of 5-digit numerical data -9999.

Setting		Meaning of Value
The data of which the decimal point position can be changed (PV/SV)	When decimal point position **[_dP *] is 0**	-9999
	When decimal point position **[_dp *] is 0.0**	-999.9
	When decimal point position **[_dp *] is 0.00**	-99.99
	When decimal point position **[_dp *] is 0.000**	-9.999

⑥ ETX

This code is needed for the receiver to detect the end of a message. It is affixed to the end of a character string to be sent (except for BCC).

⑦ BCC

This is a check code for error detection and is the exclusive OR (EX-OR) of all characters from STX to ETX.

If the BCC check is set to "Disabled" in the communications settings in this product, this code (BCC) will not be incorporated in the response message. See "2. Settings regarding TOHO communications."

⑧ ACK

It is an acknowledge code. If a message received by this product is error-free, this code will be incorporated in the "response message" from this product and returned.

⑨ NAK

It is a negative acknowledge code. If a "request message" received by this product is error-ridden, this code will be incorporated in the "response message" from this product and returned.

If the "request message" received is error-ridden, the error contents (⑩ ERR type) will be incorporated in the "response message" from this product, following NAK.

⑩ ERR type

If a "request message" received from this product is error-ridden, the error contents (either of the numbers in the table below) will be incorporated in the "response message" from this product, following "⑨ NAK."

The error number 0 is an instrument error (memory error or A/D conversion error). It will be incorporated in the "response message" regardless of whether there is an error in the "request message."

The error number 9 is an AT error. It will therefore be incorporated in the "response message" regardless of whether there is an error in the "request message." Remove the cause of the error immediately and start the AT again.

If there are two or more errors occurring at the same time, the largest error number will be incorporated.

The table below indicates the error contents and classifications.

Error No.	Error contents in the "request message" received by this product
0	Instrument error (memory error or A/D conversion error)
1	The numerical data deviated from the "range of settings designated specifically with setting items."
2	The change of requested items is disabled or there are no items to be read.
3	An ASCII code other than the numerical data was specified in the field of numerical data. An ASCII code other than "0" and "-" was specified in the field of codes.
4	Format error
5	BCC error
6	Overrun error
7	Framing error
8	Parity error
9	A PV error occurred during AT. Or AT will not end 3 hours later.

3.6 Communications precautions

3.6.1 Communications timing

Set a sufficient response delay to make sure that this product is switched over from transmission to reception with regard to a high-level computer in using an RS-485.

See the figure in "3.1 Communications procedure" and "2.8 Setting a response delay."

3.6.2 Interval between requests

In transmitting a series of "request messages" from a high-level computer, allow for an interval of 1msec or more from the reception of a "response message" from this product to a next transmission.

3.6.3 Response conditions

This product will not return a "response message" unless it receives a "request message" containing an STX and ETX (BCC).

If, therefore, the "request message" is error-ridden, this product will not return a "response message" (error reply) containing a NAK and ERR unless the conditions mentioned above are met.

Therefore, the high-level computer transmits the necessary "request message" again if a "request message" is sent to this product but the latter does not return a "response message" at the end of an appropriate period.

The moment this product receives an STX, it clears all codes received before that.

3.6.4 Errors in address specification

This product will not respond to any "request message" that specifies an address other than that specified for itself. If, therefore, the address portion of a "request message" is error-ridden, none of the mobile units will return a "response message."

Therefore, the high-level computer transmits the necessary "request message" again if a "request message" is sent to this product but the latter does not return a "response message" at the end of an appropriate period.

The moment this product receives an STX, it clears all codes received before that.

3.6.5 Number of digits in data and the decimal position

See "3.5 Description of codes, ⑤ Numerical data."

3.6.6 Operation after receiving a store request message

This product starts to store data after correctly receiving a store request message from a high-level computer.

This product only stores data different from the contents of the EEPROM (data that is changed). The time (TW) required for storing data is within 6 seconds.

This product transmits a storage-complete reply (ACK) when the data is stored.

This product will not guarantee that the data is stored if this product is turned off during a storage operation. Do not turn off this product for 6 seconds after transmitting a store request message.

3.6.7 Operation after turning on the power

This product will not perform communications (no response) for about 4 seconds after it is turned on. Allow for a delay until communications is started after this product is turned on.

3.6.8 Storing data other than a store request message

Store all parameters in the EEPROM in either of the two cases described below, even if no store request message is received.

1) If a parameter is changed by key operation
2) If auto-tuning is started and ends normally.

3.6.9 Changing the settings (SV or SV2) by communications during auto-tuning

Even if the settings (SV or SV2) used in control for auto-tuning are changed by communications, the settings (SV or SV2) will not be changed until the auto-tuning ends.

4. Examples of TOHO communications

4.1 Examples of communications to be read

Example: Request message: This requests this product set at address 27 to read the PV.
(High-level computer)

In response to that,

Response message: This returns PV data (00777).
(This product)

Read request message (transmitted from the high-level computer)

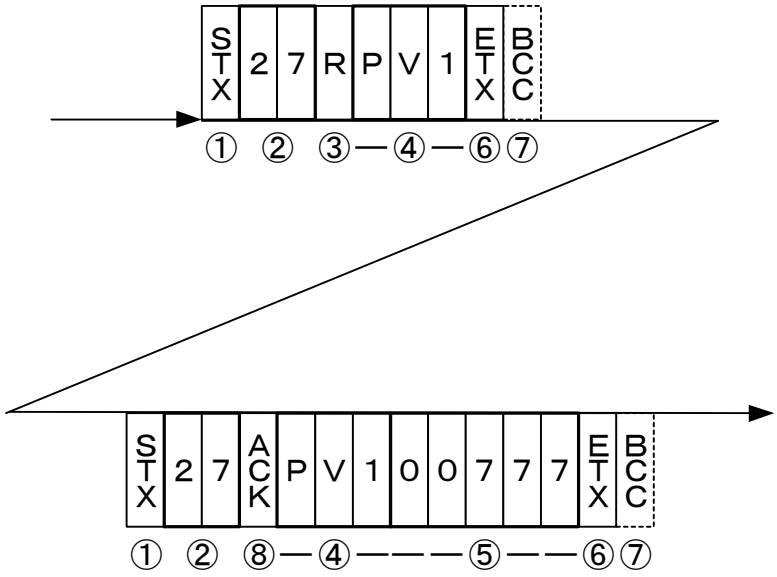

Code	Code, data	ASCII code, note 2)
① Start code	STX	02H
② Address	27	32H 37H
③ Request contents	R (Read)	52H
④ Identifier, note 1)	PV1	50H 56H 31H
⑤ Numerical data	00777	30H 30H 37H 37H 37H
⑥ End code	ETX	03H
⑦ BCC data request response		61H 02H
⑧ Acknowledge code	ACK	06H

Note 1): See "9. Table of identifiers (codes)."
Note 2): For the ASCII codes, see "10. Table of ASCII codes."

4.2 Examples of communications to be written

Example: Request message: (High-level computer) This requests this product set at address 03 to set "the E1F setting to 011" (write 011).
(This sets the function in event 1 to the deviation upper and lower limits + hold.)

In response to that,

Response message: (This product) This returns a notice that the request message has been received.
*Check that it has been written by reading the data separately.

Write request message (transmitted from a high-level computer)

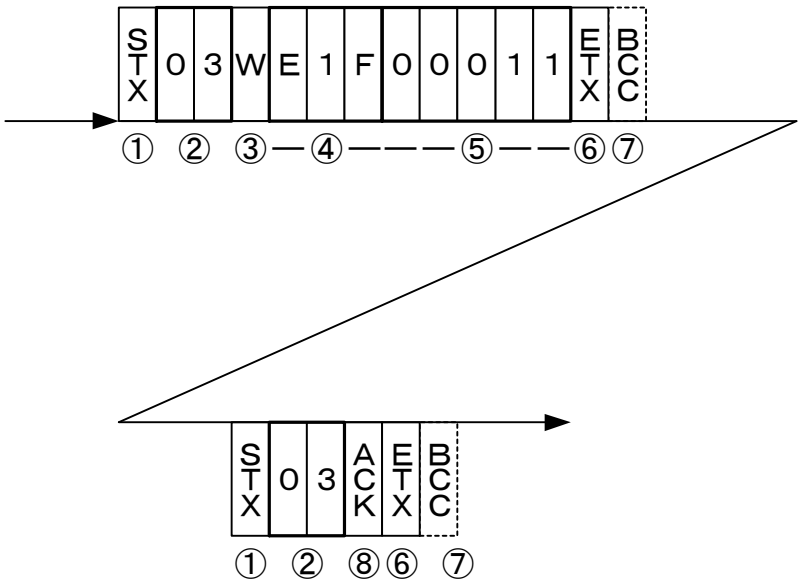

Code	Code, data	ASCII code, note 2)
① Start code	STX	02H
② Address	03	30H 33H
③ Request contents	W (Write)	57H
④ Identifier, note 1)	E1F	41H 34H 46H
⑤ Numerical data	00135	30H 30H 30H 31H 31H
⑥ End code	ETX	03H
⑦ BCC data request		53H
response		04H
⑧ Acknowledge code	ACK	06H

Note 1): See "9. Table of identifiers (codes)."
Note 2): For the ASCII codes, see "10. Table of ASCII codes."

5. Settings regarding MODBUS communications

5.1 Overview

Before communications is performed, initial settings must be made on this product. Enter such settings with the keys on the front panel.

To switch to a series of setting screens, take the steps described below.

For details, see the operation manual furnished with this product.

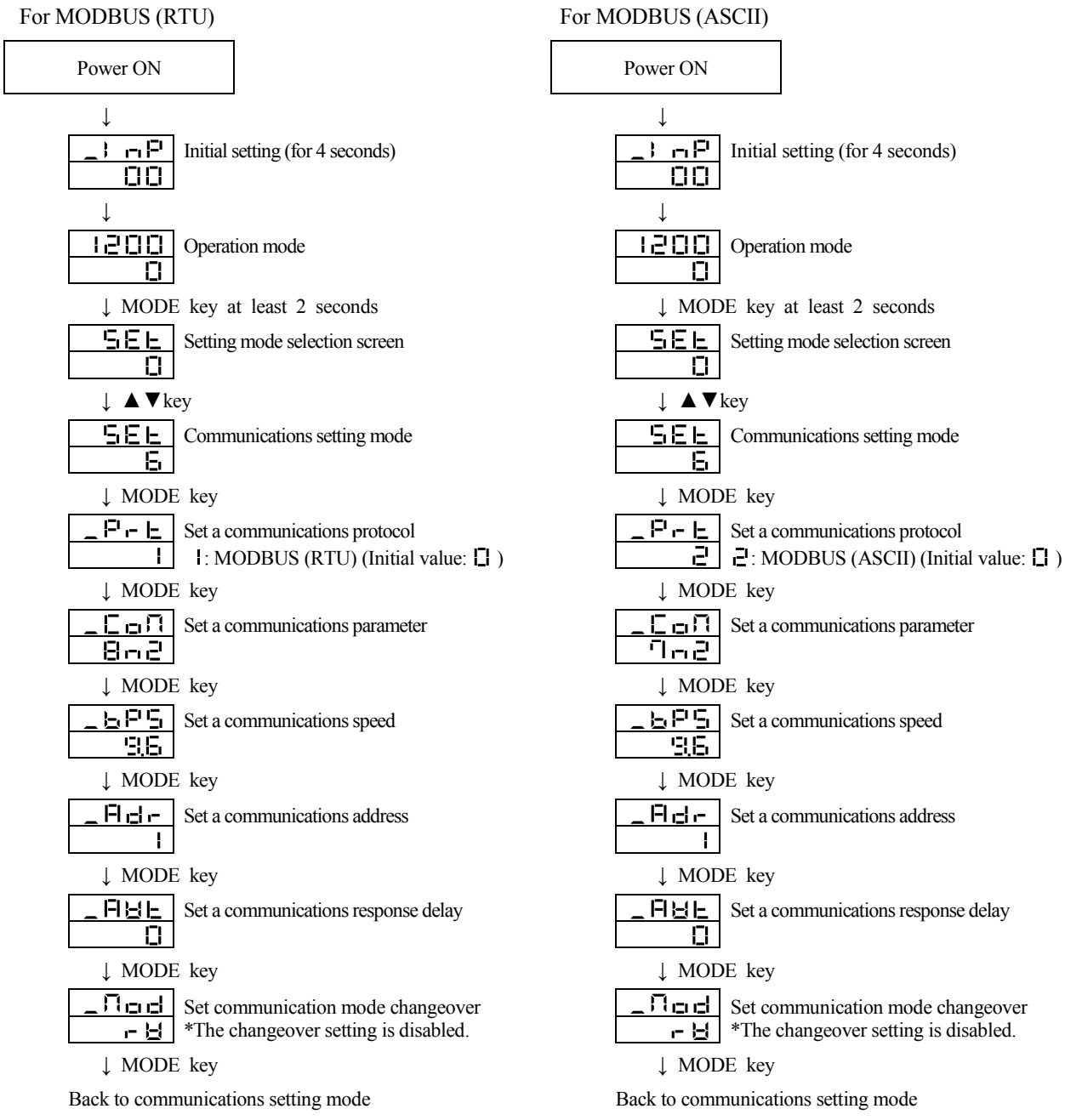

When the settings are over, press the MODE key at least 2 seconds to go back to the operation mode.

5.2 Setting a data length

5.3 Setting a stop bit length

5.4 Setting a parity

5.5 Setting a BCC check

The BCC check is disabled.
Initial value of MODBUS (RTU):8n2 Initial value of MODBUS (ASCII):7n2

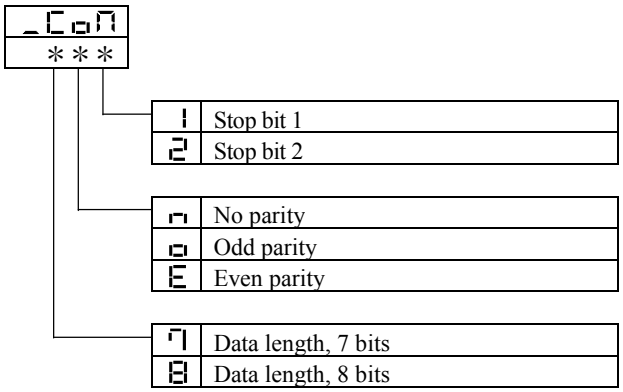

* The RTU mode settings come only in three types:8n2、8o 1、8E 1.
The ASCII mode settings come only in three types:7n2、7o 1、7E 1.

5.6 Setting a communications speed

While in the "Set a communications speed" screen on the preceding page, operate the ▲ and ▼ keys to make the settings. The initial value is 9.6.

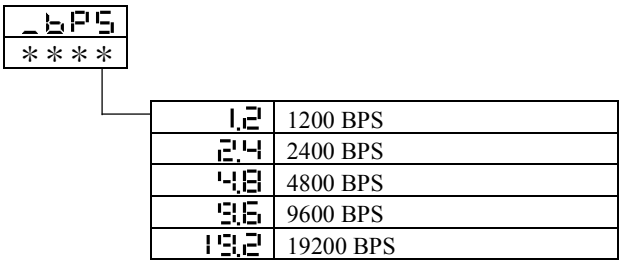

5.7 Setting an address

While in the "Set a communications address" screen on the preceding page, operate the ▲ and ▼ keys to make the settings. The initial value is 1.



Setting range: 1 to 247 stations (It cannot be set to a 0.)

5.8 Setting a response delay

Set a time from the time when the high-level computer finished sending a "request message" until the time when it delivers the line and enters an input state.

While in the "Set a response delay" on the preceding page, operate the ▲ and ▼ keys to make the settings. The initial value is 0.

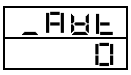

Setting range: 0 to 250msec

* If the response delay is set to a short setting, the communications may not be conducted normally.
* In a real operation, the processing time for this product will be added, in addition to the response delay.

5.9 Switching communications mode

While in the "Set communication mode changeover" screen on page 17, operate the ▲ and ▼ keys and make a setting.

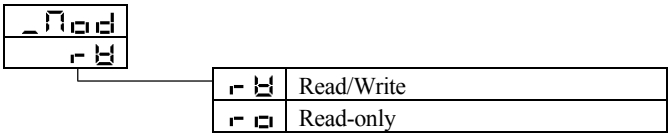

* The changeover setting is disabled.

6. MODBUS communications control

6.1 Communications procedure

This product returns a "response message" in response to a "request message" from a high-level computer. It therefore does not initiate a transmission.

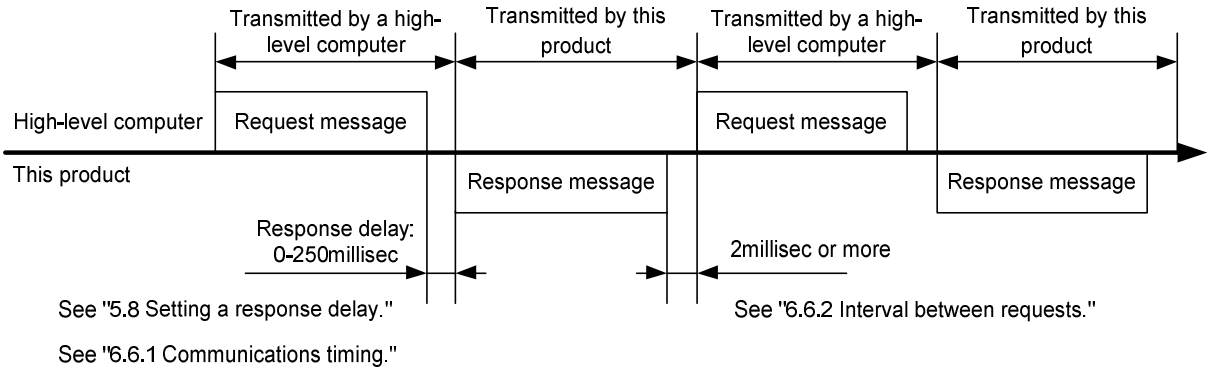

6.2 Message types

■ Messages are roughly divided into the following types:

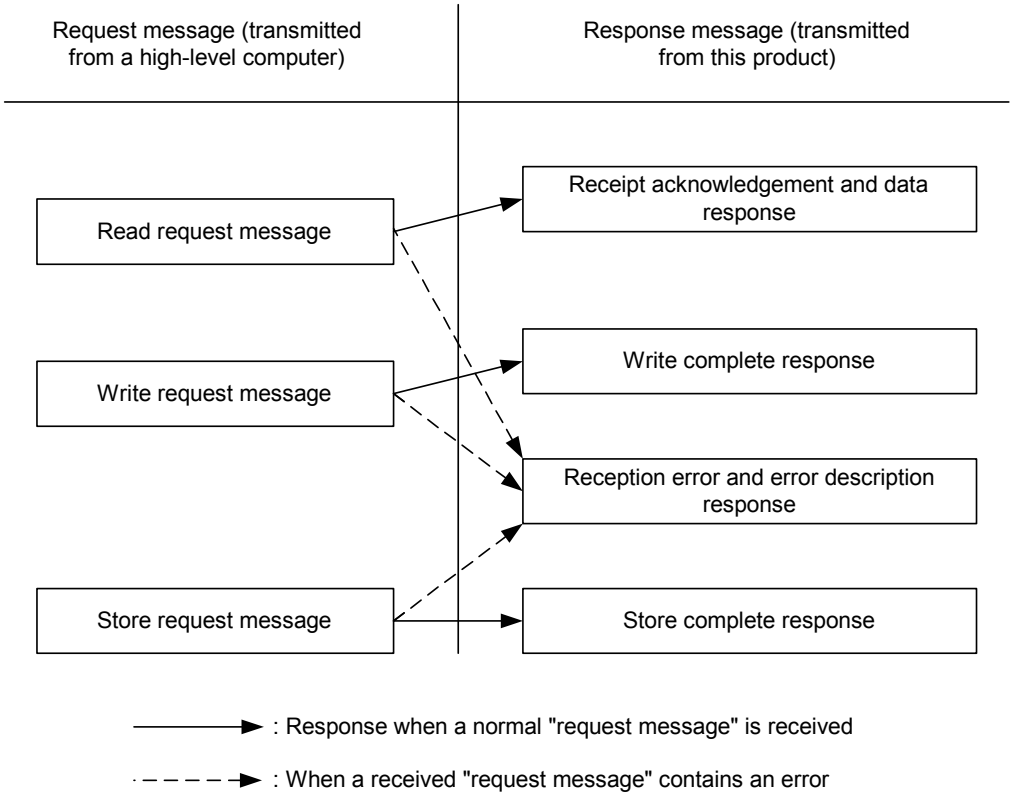

■ In RTU codes, the data is binary.

■ In ASCII codes, all codes are expressed in ASCII codes.

■ In assembling a program for a high-level computer, see "9. Table of identifiers (codes)" and "10. Table of ASCII codes" at the end of the book.

6.3 Composition of an RTU request message (transmitted from a high-level computer to this product)

■ For codes a) through i), see "6.5 Description of RTU codes."

6.3.1 Composition of a read request message

a)	Slave address		1BH	
b)	Function code		03H	
c)	Register address	High level	00H	First register address
		Low level	00H	
d)	Number of registers	High level	00H	Fixed at 2
		Low level	02H	
e)	CRC-16	Low level	31H	
		High level	C6H	

6.3.2 Composition of a write request message

a)	Slave address		03H	
b)	Function code		10H	
c)	Register address	High level	00H	First register address
		Low level	C0H	
d)	Number of registers	High level	00H	Fixed at 2
		Low level	02H	
f)	Number of data items		04H	Number of registers × 2
g)	Data for the first register (a low-level word)	High level	00H	③ When writing ①, ②, ③, and ④ H in the data, write them in the order described on the left-hand side. (① represents 1 byte.)
		Low level	6FH	④
	Data for the first register + 1 (a high-level word)	High level	00H	①
		Low level	00H	②
e)	CRC-16	Low level	5AH	
		High level	C4H	

6.3.3 Composition of a store request message

a)	Slave address		03H	
b)	Function code		10H	
c)	Register address	High level	02H	First register address
		Low level	0EH	
d)	Number of registers	High level	00H	Fixed at 2
		Low level	02H	
f)	Number of data items		04H	Number of registers × 2
g)	Data for the first register (a low-level word)	High level	00H	The data about the storage of settings is arbitrary.
		Low level	00H	
	Data for the first register + 1 (a high-level word)	High level	00H	
		Low level	00H	
e)	CRC-16	Low level	FBH	
		High level	60H	

6.4 Composition of an RTU response message (transmitted from this product to a high-level computer)

■ For codes a) through h), see "6.5 Description of RTU codes."

6.4.1 Response message for a read request message

a)	Slave address		1BH	
b)	Function code		03H	
d)	Number of data items		04H	Number of registers × 2
g)	Data for the first register (a low-level word)	High level	03H	③ When writing ①, ②, ③, and ④ H in the data, write them in the order described on the left-hand side. (① represents 1 byte.)
		Low level	09H	④
	Data for the first register + 1 (a high-level word)	High level	00H	①
		Low level	00H	②
e)	CRC-16	Low level	B4H	
		High level	91H	

6.4.2 Response message for a write/store request message

a)	Slave address		03H	
b)	Function code		10H	
c)	Register address	High level	00H	First register address
		Low level	00H	
d)	Number of registers	High level	00H	Fixed at 2
		Low level	02H	
e)	CRC-16	Low level	2AH	
		High level	40H	

6.4.3 Response message in the case of an error

a)	Slave address		1BH	
b)	Function code		83H	← In the case of an error, the function code for the request message + 80H is entered.
h)	Error code		02H	
e)	CRC-16	Low level	36H	
		High level	E1H	

6.5 Description of RTU codes

■ The codes from a) slave address to b) function code to h) error code shown below are expressed in 8-bit binary numbers.

a) Slave address

This is the address of the party (this product) with which the high-level computer communicates. The address in the response message from this product represents the source of the response message. Note that, when CH2 is used, 2 addresses are occupied. (When the ADR is set to 1, addresses 1 and 2 are occupied.)

b) Function code

Enter a code 03H or 10H.

03H: To read data from this product

10H: To write or store data in this product

c) Register address

The locations of the data to be read or that to be written are specified in 2 bytes.

For the addresses of the commands, see "9. Table of identifiers (codes)."

The data is written in the holding register.

d) Number of registers

This specifies the number of registers to be written in. Since this product has a fixed number of registers (which is 2), specify 0002H.

e) CRC-16

This error check code is for detecting message errors. This transmits a CRC-16 (tour redundancy code).

The multinomial for generating a CRC-16 used in this product is $X^{16}+X^{15}+X^{2}+1$.

To learn how to calculate the CRC-16, see "6.7 Example of CRC-16 calculations."

To affix an error code at the end of the message, affix the low-level byte first, then the high-level byte of the CRC.

f) Number of data

This specifies the number of registers to be read and written x 2. Since the number of registers in this product is fixed at 2, specify 04H here.

g) Data portion

This specifies data to be written in the register. The data is fixed at 4 bytes. This product will write data without the decimal point.

Example: In the case of numerical data

Example	Significance of the value
Proportional band (P) = 1.0 %	0000000AH
PV = 1200.0°C	00002EE0H
SV = -10.00°C	FFFFFC18H

Example: In the case of text data, write the ASCII code "□" (□ is a space)

Content of Communication	HEX Data
Priority Screen 0-1 = □ I N P	20494E50H
Priority Screen 0-2 = □M V 1	204D5631H
Priority Screen 0-3 = □□ P 1	20205031H

h) Error code

If a message from a high-level computer is error-ridden, it will be incorporated in the "response message" from this product and returned.

The error number "04" is an instrument error (memory error or A/D conversion error, AT error). It will be incorporated in the "response message" regardless of whether there is an error in the "request message."

If there are two or more errors occurring at the same time, the largest error number will be incorporated.

The table below indicates the error contents and classifications.

Error No.	Error contents in the "request message" received by this product
01	Received an unsupported function code.
02	Received an address other than the specified one.
03	The numerical data deviated from the "range of settings designated specifically with setting items."
04	Instrument error (memory error or A/D conversion error, AT error)

6.6 Precautions on RTU communications

6.6.1 Communications timing

Set a sufficient response delay to make sure that this product is switched over from transmission to reception with regard to a high-level computer in using an RS-485.

See the figure in "6.1 Communications procedure" and "5.8 Setting a response delay."

6.6.2 Interval between requests

In transmitting a series of "request messages" from a high-level computer, allow for an interval of 1msec or more or 3.5 character minutes, whichever the longer, from the reception of a "response message" from this product to a next transmission.

6.6.3 Response conditions

If there is a time interval of 3.5 characters or more between data items constituting a "request message," this product cannot recognize it as a "request message." It will therefore not return a "response message." If, therefore, the "request message" contains an error, this product will not return a "response message" (error reply) containing an ERR unless the above conditions are met.

Therefore, the high-level computer transmits the necessary "request message" again if a "request message" is sent to this product but the latter does not return a "response message" at the end of an appropriate period.

The moment a period of 3.5 characters or more has elapsed, it clears all codes received before that.

6.6.4 Errors in address specification

This product will not respond to any "request message" that specifies an address other than that specified for itself. If, therefore, the address portion of a "request message" is error-ridden, none of the mobile units will return a "response message."

Therefore, the high-level computer transmits the necessary "request message" again if a "request message" is sent to this product but the latter does not return a "response message" at the end of an appropriate period.

6.6.5 Number of digits in data and the decimal position

See "6.5 Description of RTU codes, g) Data portion."

6.6.6 Operation after receiving a store request message

This product starts to store data after correctly receiving a store request message from a high-level computer.

This product only stores data different from the contents of the EEPROM (data that is changed). The time (TW) required for storing data is within 6 seconds.

This product transmits a storage-complete reply after the data is stored.

This product will not guarantee that the data is stored if this product is turned off during a storage operation. Do not turn off this product for 6 seconds after transmitting a store request message.

6.6.7 Operation after turning on the power

This product will not perform communications (no response) for about 4 seconds after it is turned on. Allow for a delay until communications is started after this product is turned on.

6.6.8 Storing data other than a store request message

This product will store all parameters in the EEPROM in either of the two cases described below, even if no store request message is received.

1) If a parameter is changed by key operation
2) If auto-tuning is started and ends normally.

6.6.9 Changing the settings (SV or SV2) by communications during auto-tuning

Even if the settings (SV or SV2) used in control for auto-tuning are changed by communications, the settings (SV or SV2) will not be changed until the auto-tuning ends.

6.7 Example of CRC-16 calculations

Following is an example of calculating CRC-16 with VisualBasic6.0.

Variables are declared as shown below.
VisualBasic6.0 cannot use code-free variables. It therefore uses code-equipped 16-bit integer variables as data. Similarly, the CRC calculation results are entered into code-equipped 32-bit integer variables.

```
Dim CRC As Long
Dim i, j, arry_count As Integer

Dim c_next, c_carry As LongDim crc_arry(64) As Integer
```

Then enter calculable data into the crc_arry(), and enter the number of data items into the arry_count. After that, run the following program to cause the calculation results to enter the CRC.

```
i = 0
CRC = 65535
For i = 0 To arry_count
    c_next = crc_arry(i)
    CRC = (CRC Xor c_next) And 65535
    For j = 0 To 7
        c_carry = CRC And 1
        CRC = CRC ¥ 2
        If c_carry Then
            CRC = (CRC Xor &HA001) And 65535
        End If
    Next
Next
```

To affix an error code to the end of the message, affix first the low-level byte and then the high-level byte of the CRC.

6.8 Composition of an ASCII request message (transmitted from a high-level computer to this product)

■ For the codes a) through g), see "6.10 Description of ASCII codes."

6.8.1 Composition of a read request message

a)	Start code		":"	
b)	Slave address		"1" , "B"	
c)	Function code		"0" , "3"	
d)	Register address	High level	"0" , "0"	First register address
		Low level	"0" , "0"	
e)	Number of registers	High level	"0" , "0"	Fixed at 2
		Low level	"0" , "2"	
f)	LRC		"E" , "0"	
g)	End code		CR, LF	

6.8.2 Composition of a write request message

a)	Start code		":"		
b)	Slave address		"0" , "3"		
c)	Function code		"1" , "0"		
d)	Register address	High level	"0" , "0"	First register address	
		Low level	"C" , "0"		
e)	Number of registers	High level	"0" , "0"	Fixed at 2	
		Low level	"0" , "2"		
h)	Number of data items		"0" , "4"	Number of registers × 2	
i)	Data for the first register (a low-level word)	High level	"0" , "0"	③	When writing ①, ②, ③, and ④ H in the data, write them in the order described on the left-hand side. (① represents 1 byte.)
		Low level	"6" , "F"	④	
	Data for the first register + 1 (a high-level word)	High level	"0" , "0"	①	
		Low level	"0" , "0"	②	
f)	LRC		"E" , "0"		
g)	End code		CR, LF		

6.8.3 Composition of a store request message

a)	Start code		":"	
b)	Slave address		"0" , "3"	
c)	Function code		"1" , "0"	
d)	Register address	High level	"0" , "2"	First register address
		Low level	"0" , "E"	
e)	Number of registers	High level	"0" , "0"	Fixed at 2
		Low level	"0" , "2"	
h)	Number of data items		"0" , "4"	Number of registers × 2
i)	Data for the first register (a low-level word)	High level	"0" , "0"	The data about the storage of settings is arbitrary.
		Low level	"0" , "0"	
	Data for the first register + 1 (a high-level word)	High level	"0" , "0"	
		Low level	"0" , "0"	
f)	LRC		"D" , "7"	
g)	End code		CR, LF	

6.9 Composition of ASCII response messages (transmitted from this product to a high-level computer)

■ For the codes a) through g), see "6.10 Description of ASCII codes."

6.9.1 Response message for a read request message

a)	Start code		":"	
b)	Slave address		"1" , "B"	
c)	Function code		"0" , "3"	
h)	Number of data items		"0" , "4"	Number of registers × 2
i)	Data for the first register (a low-level word)	High level	"0" , "3"	③ When writing ①, ②, ③, and ④ H in the data, write them in the order described on the left-hand side. (① represents 1 byte.)
		Low level	"0" , "9"	④
	Data for the first register + 1 (a high-level word)	High level	"0" , "0"	①
		Low level	"0" , "0"	②
f)	LRC		"D" , "2"	
g)	End code		CR, LF	

6.9.2 Response message for a write/store request message

a)	Start code		":"	
b)	Slave address		"0" , "3"	
c)	Function code		"1" , "0"	
d)	Register address	High level	"0" , "0"	First register address
		Low level	"0" , "0"	
e)	Number of registers	High level	"0" , "0"	Fixed at 2
		Low level	"0" , "2"	
f)	LRC		"E" , "B"	
g)	End code		CR, LF	

6.9.3 Response message in the case of an error

a)	Start code	":"	
b)	Slave address	"1" , "B"	
h)	Function code	"8" , "3"	← In the case of an error, the function code for the request message + 80H is entered.
j)	Error code	"0" , "2"	
f)	LRC	"6" , "0"	
g)	End code	CR, LF	

6.10 Description of ASCII codes

- The codes from a) start code to b) slave address to j) error type described below are expressed in ASCII codes.
- For ASCII codes, see "10. Table of ASCII codes."
- For converting to ASCII codes, see 6.8 and 6.9 "Message composition."

a) Start code

The receiver side is the code required for detecting the top of the message. It is affixed to the top of a character string to be transmitted.

b) Slave address

This is the address of the party (this product) with which the high-level computer communicates. The address in the response message from this product represents the source of the response message. Note that, when CH2 is used, 2 addresses are occupied. (When the ADR is set to 1, addresses 1 and 2 are occupied.)

c) Function code

Enter a code 03H or 10H.

03H: To read data from this product

10H: To write or store data in this product

d) Number of registers

This specifies the number of registers to be written in. Since this product has a fixed number of registers (which is 2), specify 0002H.

e) Register address

The locations of the data to be read or that to be written are specified in 2 bytes.

For the addresses of the commands, see "9. Table of identifiers (codes)."

f) LRC

LRC is an error check code for detecting message errors. An LRC is transmitted. The LRC used in this product is the 2-complement of the sum of the data portions without a carry, except for the start code and end code of the message.

The parts of the data portions expressed as a "1" and "B" are considered as "1BH."

To learn how to calculate the LRC, see "6.12 Example of LRC calculations."

If 12H is calculated as an error code, affix a "1" or "2" at the end of the message.

g) End code

This code is required for the receiver to detect the end of a message. Affix CR (0DH) and LF (0AH) at the end of a character string to be transmitted.

h) Number of data

This specifies the number of registers to be read and written x 2. Since the number of registers in this product is fixed at 2, specify 04H here.

i) Data portion

This specifies data to be written in the register. The data is fixed at 4 bytes. This product will write data without the decimal point.

Example: In the case of numerical data

Example	Significance of the value
Proportional band (P) = 1.0 %	0000000AH
PV = 1200.0°C	00002EE0H
SV = -10.00°C	FFFFFC18H

Example: In the case of text data, write the ASCII code "□" (□ is a space)

Content of Communication	HEX Data
Priority Screen 0-1 ＝ □ I N P	20494E50H
Priority Screen 0-2 ＝ □M V 1	204D5631H
Priority Screen 0-3 ＝ □□ P 1	20205031H

j) Error code

If a message from a high-level computer is error-ridden, it will be incorporated in the "response message" from this product and returned.

The error number "04" is an instrument error (memory error or A/D conversion error, AT error). It will be incorporated in the "response message" regardless of whether there is an error in the "request message."

If there are two or more errors occurring at the same time, the largest error number will be incorporated.

The table below indicates the error contents and classifications.

Error No.	Error contents in the "request message" received by this product
01	Received an unsupported function code.
02	Received an address other than the specified one.
03	The numerical data deviated from the "range of settings designated specifically with setting items."
04	Instrument error (memory error or A/D conversion error, AT error)

6.11 Precautions on ASCII communications

6.11.1 Communications timing

Set a sufficient response delay to make sure that this product is switched over from transmission to reception with regard to a high-level computer in using an RS-485.

See the figure in "6.1 Communications procedure" and "5.8 Setting a response delay."

6.11.2 Interval between requests

In transmitting a series of "request messages" from a high-level computer, allow for an interval of 1msec or more or 3.5 character minutes, whichever the longer, from the reception of a "response message" from this product to a next transmission.

6.11.3 Response conditions

This product will not return a "response message" unless the "request message" contains a start code and end code.

If, therefore, the "request message" contains an error, this product will not return a "response message" (error reply) containing an error code unless the above conditions are met.

Therefore, high-level computer transmits the necessary "request message" again if a "request message" is sent to this product but the latter does not return a "response message" at the end of an appropriate period.

The moment a start code is received, this product clears all codes received before that.

6.11.4 Errors in address specification

This product will not respond to any "request message" that specifies an address other than that specified for itself. If, therefore, the address portion of a "request message" is error-ridden, none of the mobile units will return a "response message."

Therefore, the high-level computer transmits the necessary "request message" again if a "request message" is sent to this product but the latter does not return a "response message" at the end of an appropriate period.

The moment a start is received, this product clears all codes received before that.

6.11.5 Number of digits in data and the decimal position

See "6.10 Description of ASCII codes, i) Data portion."

6.11.6 Operation after receiving a store request message

This product starts to store data after correctly receiving a store request message from a high-level computer.

This product only stores data different from the contents of the EEPROM (data that is changed). The time (TW) required for storing data is within 6 seconds.

This product transmits a storage-complete reply after the data is stored.

This product will not guarantee that the data is stored if this product is turned off during a storage operation. Do not turn off this product for 6 seconds after transmitting a store request message.

6.11.7 Operation after turning on the power

This product will not perform communications (no response) for about 4 seconds after it is turned on. Allow for a delay until communications is started after this product is turned on.

6.11.8 Storing data other than a store request message

This product will store all parameters in the EEPROM in either of the two cases described below, even if no store request message is received.

1) If a parameter is changed by key operation
2) When the auto-tuning is activated and ends normally, only PID constant will be written.

6.11.9 Changing the settings (SV or SV2) by communications during auto-tuning

Even if the settings (SV or SV2) used in control for auto-tuning are changed by communications, the settings (SV or SV2) will not be changed until the auto-tuning ends.

6.12 Example of LRC calculations

Following is an example of calculating LRC with VisualBasic6.0.

Variables are declared as shown below.
VisualBasic6.0 cannot use code-free variables. It therefore uses code-equipped 16-bit integer variables as data. Similarly, the LRC calculation results are entered into code-equipped 16-bit integer variables.

```
Dim LRC As Integer
Dim i, arry_count As Integer

Dim lrc_arry(128) As Integer
```

Then enter calculable data into the 1rc_arry(), and enter the number of data items into the arry_count
After that, run the following program to cause the calculation results to enter the LRC.

```
For i = 0 To arry_count
    LRC = (LRC + lrc_arry(i)) And &HFF
Next

LRC = ((Not LRC) + 1) And &HFF
```

If the error code is calculated as 12H as an example, affix a "1" or "2" at the end of the message.

7. Specifications

7.1 Communications standard category

Compliant with EIA standard RS-485

7.2 Communications specifications

7.2.1 Communications system

Network: ..... Multi-drop system (up to 1 pair, 31 stations)
Direction of information: ..... Half duplex
Synchronization system: ..... Asynchronous
Transmission code: ..... ASCII, 7 bit code, except for BCC data
(highest-level bit = 0 in 8-bit code)

7.2.2 Interface system

Signal line: ..... 2 lines for transmission and reception
Communications speed: ..... 1,200, 2,400, 4,800, 9,600 and 19,200 bps and this product is set to it.
Communications distance: ..... 500m maximum
Provided that it varies somewhat depending on the cable and other ambient conditions.

7.2.3 Character

1) TOHO communications protocols
Start bit length: ..... Fixed at 1 bit
Stop bit length: ..... Either 1 or 2 bit is selected and this product is set to it.
Data length: ..... Either 7 or 8 bit is selected and this product is set to it.
Parity: ..... No. Either odd or even is selected and this product is set to it.
BCC check:..... Yes or no is selected and this product is set to it.
Communications address:..... 1-99

2) MODBUS communications (RTU) protocols
Start bit length: ..... Fixed at 1 bit
Stop bit length: ..... Either 1 or 2 bit is selected and this product is set to it.
(If parity-equipped, fixed at 1 bit.)
Data length: ..... Fixed at 8 bit.
Parity: ..... No. Either odd or even is selected and this product is set to it.
CRC-16 check: ..... Fixed at yes.
Communications address:..... 1-247

3) MODBUS communications (ASCII) protocols
Start bit length: ..... Fixed at 1 bit
Stop bit length: ..... Either 1 or 2 bit is selected and this product is set to it.
(If parity-equipped, fixed at 1 bit.)
Data length: ..... Fixed at 7 bit.
Parity: ..... No. Either odd or even is selected and this product is set to it.
LRC check:..... Fixed at yes.
Communications address:..... 1-247

4) MODBUS communications (RTU/ASCII) function codes
03H (reading the contents of the holding register)
10H (writing the contents of two or more holding registers)

8. Connections

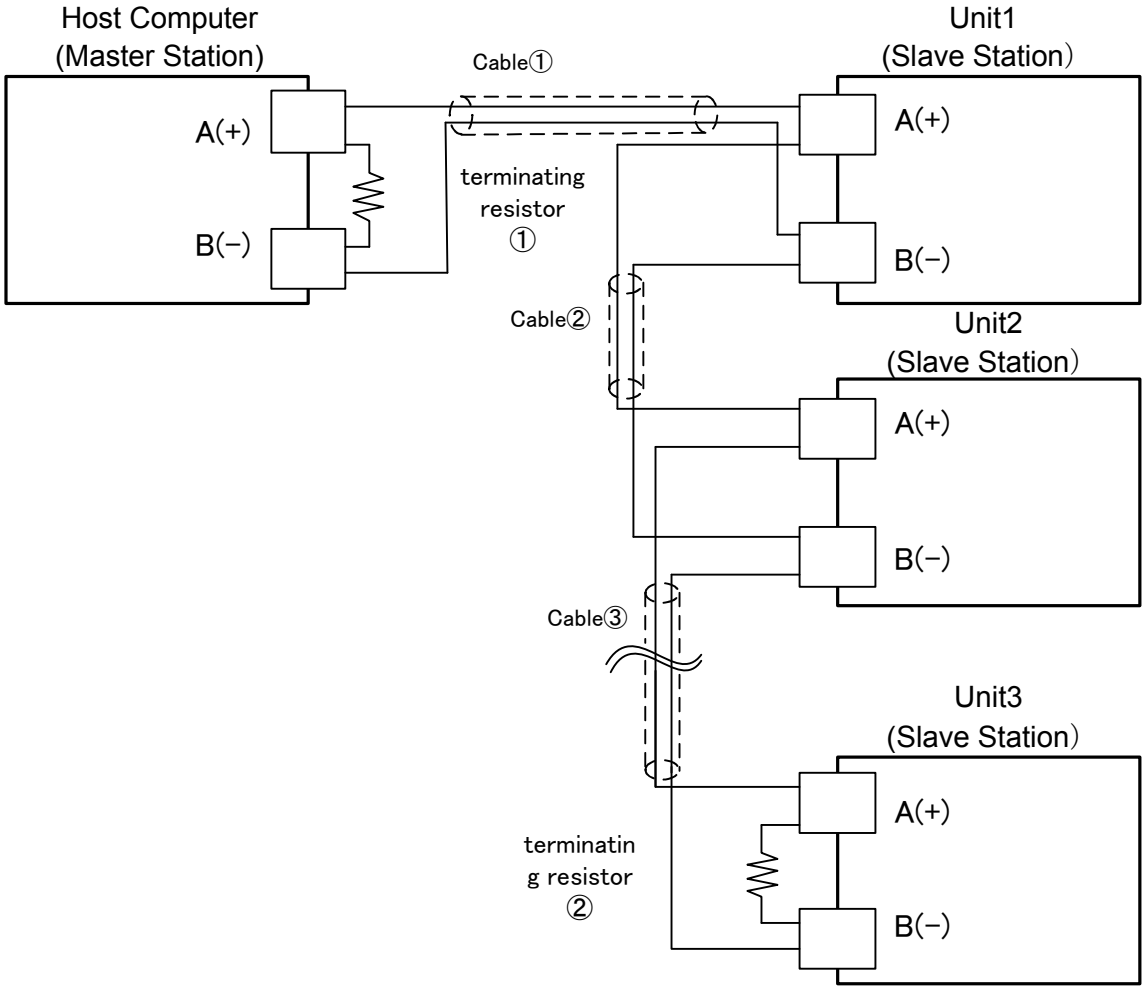

○Above drawing shows example of connecting 1 to 3 slave stations to a master station.

◇ Use cables with the same characteristic impedance for cables ① to ③.

- For slave station nos. 1 to 3, connect them dependently as shown in the drawing. The same characteristic impedance cables are used for the connections between the slave stations.

◇ Attach terminating resistor to both the master station side ① and the farthest ② ones among the slave stations (no. 3).

◇ Make sure to select terminating resistor in order that the [Characteristic Impedance from cables ① to ③] = [Resistance Value of ①] = [Resistance Value of ②]

- Furthermore, use characteristic impedance cable whose [Resistance Value of ①] // [Resistance Value of ②] (parallel combination resistance value) becomes above 75-ohms.

9. Table of identifiers (codes)

■ For the setting range, options, initial values, and similar parameters, see the operation manual for this system.

a) Identifier: This code represents an item. Enter this code in the identifier field in the message. The □ in the frame represents an SP (ASCII code: 20H).

b) Character: The character to be displayed on the system screen.

c) Name: Item name

d) R/W: This specifies which is possible: reading, writing, or both.

e) Description:

Note: The R/W to characters that do not meet the display conditions responds with "NAK2."

Example: If no EV2 option is selected, the R/W to the EV2 character becomes "NAK2."

Identifier	Relative address	Absolute address	Character	Name	R/W	Description
PV1	0000h	40001		Setting value (PV)	R	Use it as monitor for measurements (PV). When overscale: HHHHH When underscale: LLLLL
SV1	0002h	40003		Setting value (SV)	R/W	R/W the setting value (SV)
PR1	0004h	40005	Pr1 1	Setting for 1st Priority display	R/W	RW the priority screen function setting 1 Example: □□ INP (identifier)
PR2	0006h	40007	Pr1 2	Setting for 2nd Priority display	R/W	RW the priority screen function setting 2 Example: □□INP (identifier)
PR3	0008h	40009	Pr1 3	Setting for 3rd Priority display	R/W	RW the priority screen function setting 3 Example: □□INP (identifier)
PR4	000Ah	40011	Pr1 4	Setting for 4th Priority display	R/W	RW the priority screen function setting 4 Example: □□INP (identifier)
PR5	000Ch	40013	Pr1 5	Setting for 5th Priority display	R/W	RW the priority screen function setting 5 Example: □□INP (identifier)
PR6	000Eh	40015	Pr1 6	Setting for 6th Priority display	R/W	RW the priority screen function setting 6 Example: □□INP (identifier)
PR7	0010h	40017	Pr1 7	Setting for 7th Priority display	R/W	RW the priority screen function setting 7 Example: □□INP (identifier)
PR8	0012h	40019	Pr1 8	Setting for 8th Priority display	R/W	RW the priority screen function setting 8 Example: □□INP (identifier)
PR9	0014h	40021	Pr1 9	Setting for 9th Priority display	R/W	RW the priority screen function setting 9 Example: □□INP (identifier)
INP	0016h	40023	_1 inP	Input type setting	R/W	R/W the input type setting
PVG	0018h	40025	_PuG	PV correction gain	R/W	R/W the PV corrected gain setting
PVS	001Ah	40027	_PuS	Zero point setting for PV correction	R/W	R/W the PV corrected zero point setting
PDF	001Ch	40029	_PdF	Filter input	R/W	R/W the input filter setting
□DP	001Eh	40031	_ dP	Position for decimal point	R/W	R/W the decimal position setting No decimal point: 00000 Decimal point: 00001
□FU	0020h	40033	_ FU	FUNC key setting	R/W	R/W the function key function setting
LOC	0022h	40035	_LoC	Key lock setting	R/W	R/W the key lock setting
SLH	0024h	40037	_SLH	High limit setting in SV limiter	R/W	R/W the SV limiter upper limit setting
SLL	0026h	40039	_SLL	Low limit setting in SV limiter	R/W	R/W the SV limiter lower limit setting

Identifier	Relative address	Absolute address	Character	Name	R/W	Description
□MD	0028h	40041	_ Md	Control mode setting	R/W	R/W the control mode setting Control execution: 00000 Manual control: 00001 Control stop: 00002 Auto-tuning in progress: 00003
CNT	002Ah	40043	_Cnt	Selection of control type setting	R/W	R/W the control type setting
DIR	002Ch	40045	_dir	Change of normal or reverse	R/W	R/W the forward/reverse operation switchover setting
MV1	002Eh	40047	_Mv1	Manipulated value for output 1	R/W	R/W the output 1 operation amount
TUN	0030h	40049	_tUn	Set for PID tuning type	R/W	R/W the tuning type setting
ATG	0032h	40051	_AtG	AT coefficient setting	R/W	R/W the AT factor
ATC	0034h	40053	_AtC	AT sensitivity setting	R/W	R/W the AT sensitivity
□P1	0036h	40055	_ P1	Proportional band setting for output 1	R/W	R/W the output 1 proportional band setting
□I1	0038h	40057	_ I	Integral time setting	R/W	R/W the integral time setting
□D1	003Ah	40059	_ d	Derivative time setting	R/W	R/W the derivative time setting
□T1	003Ch	40061	_ t1	Proportional cycle setting For output 1	R/W	R/W the output 1 proportional frequency setting
ARW	003Eh	40063	_Arw	ARW(Anti-reset windup) setting	R/W	R/W the anti-reset windup
MH1	0040h	40065	_MH1	High limit setting of manipulated value for output 1	R/W	R/W the amount-of-operation limiter upper limit setting
ML1	0042h	40067	_ML1	Low limit setting of manipulated value for output 1	R/W	R/W the amount-of-operation limiter lower limit setting
□C1	0044h	40069	_ C1	Control sensitivity setting for output 1	R/W	R/W the output 1 control sensitivity setting
CP1	0046h	40071	_CP1	OFF position setting for output 1	R/W	R/W the output 1 off-point position setting
MV2	0048h	40073	_Mv2	Manipulated value for output 2	R/W	R/W the output 2 operation amount
□P2	004Ah	40075	_ P2	Proportional band setting for output 2	R/W	R/W the output 2 proportional band setting
□T2	004Ch	40077	_ t2	Proportional cycle setting for output 2	R/W	R/W the output 2 proportional frequency setting
MH2	004Eh	40079	_MH2	High limit setting of manipulated value for output 2	R/W	R/W the amount-of-operation limiter upper limit setting
ML2	0050h	40081	_ML2	Low limit setting of manipulated value for output 2	R/W	R/W the amount-of-operation limiter lower limit setting
□C2	0052h	40083	_ C2	Control sensitivity setting for output 2	R/W	R/W the output 2 control sensitivity setting
CP2	0054h	40085	_CP2	OFF position setting for output 2	R/W	R/W the output 2 off-point position setting
PBB	0056h	40087	_Pbb	Manual reset setting	R/W	R/W the manual reset
□DB	0058h	40089	_ db	Dead band setting	R/W	R/W the dead band setting
RP1	005Ah	40091	_rP1	SV Ramp variation setting	R/W	R/W the SV lamp time setting
RP2	005Ch	40093	_rP2	SV2 Ramp variation setting	R/W	R/W the SV2 lamp time setting
E1F	005Eh	40095	_E1F	Function setting for EV1	R/W	R/W the PV event output 1 function setting
E1H	0060h	40097	_E1H	High limit setting for EV1	R/W	R/W the event output 1 upper limit setting
E1L	0062h	40099	_E1L	Low limit setting for EV1	R/W	R/W the event output 1 lower limit setting
E1C	0064h	40101	_E1C	Control sensitivity setting for EV1	R/W	R/W the event output 1 sensitivity setting
E1T	0066h	40103	_E1t	Delay time setting for EV1	R/W	R/W the event output 1 delay timer setting

Identifier	Relative address	Absolute address	Character	Name	R/W	Description
E1B	0068h	40105	_E 1b	Abnormal for EV1	R/W	R/W the special event output 1 function setting
E1P	006Ah	40107	_E 1P	Polarity setting for EV1	R/W	R/W the event output 1 polarity setting
CM1	006Ch	40109	_ CE	CT input monitor for EV1	R	Read the CT input monitor
CT1	006Eh	40111	_CE 1	Abnormality current value of heater for EV1	R/W	R/W the event output 1 current abnormality setting
E2F	0070h	40113	_E2F	Function setting for EV2	R/W	R/W the PV event output 2 function setting
E2H	0072h	40115	_E2H	High limit setting for EV2	R/W	R/W the event output 2 upper limit setting
E2L	0074h	40117	_E2L	High limit setting for EV2	R/W	R/W the event output 2 lower limit setting
E2C	0076h	40119	_E2C	Control sensitivity setting for EV2	R/W	R/W the event output 2 sensitivity setting
E2T	0078h	40121	_E2t	Delay time setting for EV2	R/W	R/W the event output 2 delay timer setting
E2B	007Ah	40123	_E2b	Abnormal for EV2	R/W	R/W the special event output 2 function setting
E2P	007Ch	40125	_E2P	Polarity setting for EV2	R/W	R/W the event output 2 polarity setting
CM2	007Eh	40127	_ CE	CT input monitor for EV2	R	Read the CT input monitor
CT2	0080h	40129	_CE2	Abnormality current value of heater for EV2	R/W	R/W the event output 2 current abnormality setting
DIF	0082h	40131	_di F	Function setting for DI	R/W	R/W the DI input function setting
DIP	0084h	40133	_di P	Polarity setting for DI	R/W	R/W the DI polarity setting
SV2	0086h	40135	_Su2	Setting for SV2	R/W	R/W the control setting 2
PRT	0088h	40137	_Prt	Communications protocol setting	R/W	R/W the communications protocol setting Special-purpose protocol: 00000 MODBUS (RTU): 00001 MODBUS (ASCII): 00002
COM	008Ah	40139	_CoM	Parameter setting for communication	R/W	R/W the communications parameter setting Example: □B8N2
BPS	008Ch	40141	_bPS	Speed setting	R/W	R/W the communications speed setting Example: 00096 (if 9600 bps)
ADR	008Eh	40143	_Adr	Address setting	R/W	R/W the communications address setting
AWT	0090h	40145	_AWt	Response delay time setting	R/W	R/W the response delay setting
MOD	0092h	40147	_Mod	Mode selection setting	R/W	R/W the communications mode switchover setting RO: 00000 RW: 00001
TMO	0094h	40149	_tmo	Timer output setting	R/W	R/W the timer output destination setting
TMF	0096h	40151	_tMF	Timer function setting	R/W	R/W the timer function setting
H/M	0098h	40153	_HrM	Timer unit selection	R/W	R/W the timer unit switchover setting
TSV	009Ah	40155	_tSu	Timer SV start permissible range	R/W	R/W the timer SV start tolerance setting
TIM	009Ch	40157	_ti M	Timer time setting	R/W	R/W the timer time setting
TIA	009Eh	40159	_ti A	Timer residual time monitor setting	R	Read the timer remaining time monitor
TRF	00A0h	40161	_trF	Transfer output function setting	R/W	R/W the transmission output function setting

Identifier	Relative address	Absolute address	Character	Name	R/W	Description
TRP	00A2h	40163	_trP	Transfer output normal/reverse switch setting	R/W	R/W the forward/reverse operation switchover setting for transmission output
TRH	00A4h	40165	_trH	Transfer output scaling high limit setting	R/W	R/W the upper limit setting for transmission output scaling
TRL	00A6h	40167	_trL	Transfer output scaling low limit setting	R/W	R/W the lower limit setting for transmission output scaling
TST	00A8h	40169		Timer start/stop	R/W	R/W the timer start/stop Start: 00001 Stop: 00000
OM1	00AAh	40171		Output status monitor	R	Read the output monitor ①②③④⑤ ⑤: OUT1 (1:ON 0:OFF) ④: OUT2 (1:ON 0:OFF) ③: EV1 (1:ON 0:OFF) ②: EV2 (1:ON 0:OFF)
EM1	00ACh	40173		DI status monitor	R	Read the DI monitor ON: 00001 OFF: 00000
□AT	00AEh	40175		Start/release AT	R/W	R/W the start/release AT
STR	00B0h	40177		Store data	W	Store data

Identifiers used only in blind setting

Identifier	Relative address	Absolute address	Character	Name	L/B	Description
000			SEt0	SET0	L/B	Blinding enabled: 00000 Blinding disabled: 00001
001			SEt 1	SET1	L/B	Blinding enabled: 00000 Blinding disabled: 00001
002			SEt2	SET2	L/B	Blinding enabled: 00000 Blinding disabled: 00001
003			SEt3	SET3	L/B	Blinding enabled: 00000 Blinding disabled: 00001
004			SEt4	SET4	L/B	Blinding enabled: 00000 Blinding disabled: 00001
005			SEt5	SET5	L/B	Blinding enabled: 00000 Blinding disabled: 00001
006			SEt6	SET6	L/B	Blinding enabled: 00000 Blinding disabled: 00001
007			SEt7	SET7	L/B	Blinding enabled: 00000 Blinding disabled: 00001
008			SEt8	SET8	L/B	Blinding enabled: 00000 Blinding disabled: 00001

10. Table of ASCII codes

Upper / Lower	00h	10h	20h	30h	40h	50h	60h	70h
00h	**NUL**	**DEL**	**SPACE**	**0**	**@**	**P**	**`**	**p**
01h	**SOH**	**DC1**	**!**	**1**	**A**	**Q**	**a**	**q**
02h	**STX**	**DC2**	**"**	**2**	**B**	**R**	**b**	**r**
03h	**ETX**	**DC3**	**#**	**3**	**C**	**S**	**c**	**s**
04h	**EOT**	**DC4**	**$**	**4**	**D**	**T**	**d**	**t**
05h	**ENQ**	**NAK**	**%**	**5**	**E**	**U**	**e**	**u**
06h	**ACK**	**SYM**	**&**	**6**	**F**	**V**	**f**	**v**
07h	**BEL**	**ETB**	**'**	**7**	**G**	**W**	**g**	**w**
08h	**BS**	**CAN**	**(**	**8**	**H**	**X**	**h**	**x**
09h	**HT**	**EM**	**)**	**9**	**I**	**Y**	**i**	**y**
0Ah	**LF**	**SUB**	*****	**:**	**J**	**Z**	**j**	**z**
0Bh	**VT**	**ESC**	**+**	**;**	**K**	**[**	**k**	**{**
0Ch	**FF**	**FS**	**,**	**<**	**L**	**¥**	**l**	**|**
0Dh	**CR**	**GS**	**-**	**=**	**M**	**]**	**m**	**}**
0Eh	**SO**	**RS**	**.**	**>**	**N**	**^**	**n**	**~**
0Fh	**SI**	**US**	**/**	**?**	**O**	**_**	**o**	**DEL**

※How to look at ASCII Code table

(ASCII Code) = (Upper Level) + (Lower Level)

Ex. 1) In case of “A”: (41h) = (40h) + (01h)

Ex. 2) In case of “M”: (6Dh) = (60h) + (0Dh)

TOHO ELECTRONICS INC.

Head office: 1-13-21, Tanashioda, Chuo-ku, Sagamihara-shi, Kanagawa 252-0245 Japan.
Phone: +81-42-777-3316 Fax: +81-42-777-3751

49-7626-E