HybridKit Drive Quickstart Manual

Quick Start Guide for HYBRIDKIT DRIVE

About this document

This application note gives a quick start guide for both evaluation kits "*HybridKit Drive*" and "*HybridKit Drive Sense*". These evaluation kits are full inverter evaluation kits designed to support customers in their first steps in designing applications with the HybridPACK™ Drive.
The *HybridKit Drive Sense* is similar to the *HybridKit Drive* but comes in addition with a precise phase current sensor useable for advanced motor control.

Author: Tomas Reiter (IFAG ATV HP EDT MD).

Scope and purpose

A comprehensive quickstart guide for the *HybridKit Drive* and *HybridKit Drive Sense* is given in this application note. Within a few minutes and without any software and/or communication to external control units, it is possible to operate a basic open loop inverter operation. This is a special mode well suited for passive three phase inductive loads and simple load tests (DEMO-MODE) up to the power module maximum performance.
The evaluation kit is an open design. Therefore, the shipping content includes a CD with schematics, layout and bill of material (BOM) information of the gate driver board, the logic board and the interface PCB.

Before getting started it is mandatory to read and understand the safety warnings (section 1.1) and the features and limitations (chapter 3).

Intended audience

Experienced engineers evaluating HybridPACK™ Drive power modules.

Table of Contents

1 Introduction 2
1.1 Safety Warning for Evaluation KIT 2
2 How to order HYBRID KIT DRIVE (SENSE) 3
3 Feature and Limitations Overview 4
3.1 Block Diagram 4
3.2 Operating Conditions 5
3.3 Key Features 5
3.4 Limitations of the Evaluation Kit 6
3.5 Key Components List 6
4 Quickstart Guide (DEMO-MODE) 7
4.1 Recommended equipment for evaluation 7
4.2 Connecting the Evaluation Kit (supply and load) 7
4.3 Connecting the Evaluation Kit (cooling system) 8
4.4 How to enable DEMO-MODE (required connectors) 9
5 Explanation of DEMO-MODE functions 10
5.1 Adjusting the Modulation Index 10
5.2 Adjusting the Output Frequency 12
6 References and Revision History 13

1 Introduction

The evaluation kit *HybridKit Drive* and *HybridKit Drive* Sense are full inverter systems including B6 bridge power modules, gate driver board, micro-controller logic board, dc-link capacitor and cooling. The evaluation kits support the customers in their first steps designing applications with the HybridPACK™ Drive.

Please read and understand the manual and the following safety warnings (see section 1.1).
Main features and limitations are described in chapter 3. The quickstart guide in chapter 4 explains the DEMO-MODE which is a open loop inverter mode allowing only to change the modulation index and output frequency within pre-defined default values.

1.1 Safety Warning for Evaluation Kit

The design operates with unprotected high voltages. Therefore, the Evaluation Kit may only be handled by persons with sufficient electrical engineering training and experience. The customer assumes all responsibility and liability for its correct handling and/or use of the Evaluation Kit and undertakes to indemnify and hold Infineon Technologies harmless from any third party claim in connection with or arising out of the use and/or handling of the Evaluation Kit by the customer.
The Evaluation Kit is a sample to be used by the customer solely for the purpose of evaluation and testing. It is not a commercialized product and shall not be used for series production. The Evaluation Kit is thus not intended to meet any automotive qualifications. Due to the purpose of the system, it is not subjected to the same procedures regarding Returned Material Analysis (RMA), Process Change Notification (PCN) and Product Withdraw (PWD) as regular products. See Legal Disclaimer and Warnings for further restrictions on Infineon Technologies warranty and liability.
European legislation in relation to inter alia the restriction of hazardous substances (RoHS), waste from electrical and electronic equipment (WEEE), electromagnetic compatibility, as well as duties to comply with CE, FCC or UL standards do not apply to the Evaluation Kit and the Evaluation Kit may not fulfill such requirements.

LEGAL DISCLAIMER *THE INFORMATION GIVEN IN THIS DOCUMENT SHALL IN NO EVENT BE REGARDED AS A GUARNATEE OF CONDITIONS OR CHARACTERISTICS (“BESCHAFFENHEITSGARANTIE”). WITH RESPECT TO ANY EXAMPLES OR HINTS GIVEN HEREIN, ANY TYPICAL VALUES STATED HEREIN AND/OR ANY INFORMATION REGARDING THE APPLICATION OF THE EVALUATION KIT, INFINEON TECHNOLOGIES HEREBY DISCLAIMS ANY AND ALL WARRANTIES AND LIABILITIES OF ANY KIND, INCLUDING WITHOUT LIMITATION WARRANATIES OF NON_INFRINGEMENT OF INTELLECTUAL PROPERTY RIGHTS OF ANY THIRD PARTY.*

Information For further information on technology, delivery terms and conditions and prices, please contact the nearest Infineon Technologies Office (**www.infineon.com**).
Warnings Due to technical requirements, components may contain dangerous substances. For information on the types in question, please contact the nearest Infineon Technologies Office. Infineon Technologies components may be used in life-support devices or systems only with the express written approval of Infineon Technologies, if a failure of such components can reasonably be expected to cause the failure of that life-support device or system or to affect the safety or effectiveness of that device or system. Life support devices or systems are intended to be implanted in the human body or to support and/or maintain and sustain and/or protect human life. If they fail, it is reasonable to assume that the health of the user or other persons may be endangered.

2 How to order *HybridKit Drive* (Sense)

The evaluation kit HYBRID KIT DRIVE and HYBRID KIT DRIVE SENSE can be ordered via Infineon sales partners:

- SAP ordering number for **HybridKit Drive**: **SP001464622.**
- SAP ordering number for **HybridKit Drive Sense**: **SP001464626.**
- Both evaluation kits are also available at the webshop: http://www.ehitex.com

The shipping content of the **HybridKit Drive** include the:

- ✓ HybridPACK™ Drive power module **FS820R08A6P2B** (SP001499708)
- ✓ Reference alu cooler + recommended sealing ring
- ✓ Gate driver board **EVAL-6ED100HPDRIVE-AS** (SP001386654)
- ✓ Logic board (pre-installed basic SW)
- ✓ DC-Link capacitor
- ✓ Cables
- ✓ CD with documentation, design files and software

The shipping content of the **HybridKit Drive Sense** comes with following differences:

- ✓ HybridPACK Drive power module with long AC tabs (FS820R08A6P2**LB)**
- ✓ Additional LEM current sensor **HAH3DR 800-S07**

The typical appearances of the two evaluation kit versions are shown in Figure 1a and b, respectively.

a)

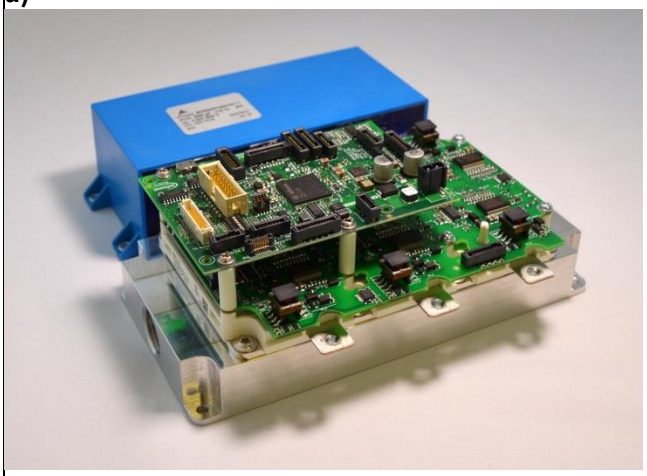

HybridKit Drive (typ appearance)
SP001464622

b)

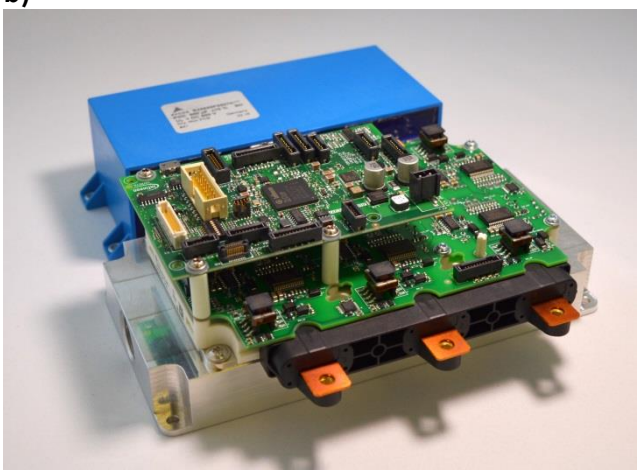

HybridKit Drive Sense (typ appearance)
SP001464626

Figure 1 Typical appearance of the two versions of the evaluation kits.

3 Feature and Limitations Overview

3.1 Block Diagram

The Figure 2 shows the block diagram with simplified signal and power flow connections as well as the implemented key components.

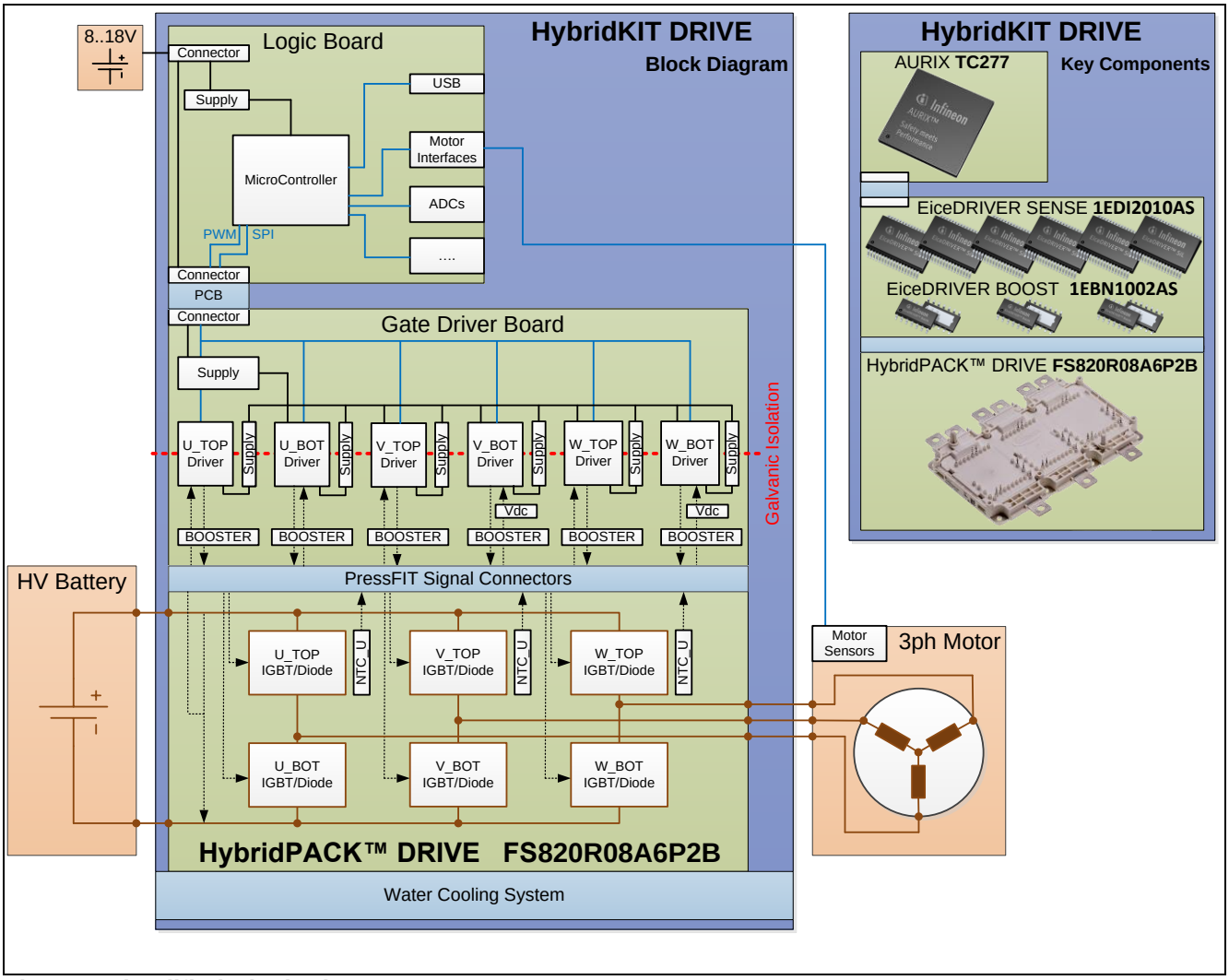

Figure 2 Simplified Block Diagram

3.2 Operating Conditions

The following recommended operating conditions describes the targeted lab testing environment.
The evaluation kit is not designed for a fixed specification and it cannot be regarded as a protected system, as it would require strict shutdown routines and would limit then the main evaluation purpose. Therefore, please respect the specifications of individual parts and especially the thermal limits.

Please see also the section 3.4 in order to understand the limitations.

Table 1 Operating Conditions

Type	Symb	Min	Max	Conditions
Gate Driver Board Supply	V_{supply}	8V	18V	
Working Voltage Capacitor DC-Link Voltage	V_{DC}	0V	500V*	*limited by capacitor
Transient Collector Phase Current	I_{ph}	-1640A	+1640A	limited by T_{vj,op_max}
Maximum IGBT/Diode Junction Temp	T_{vj,op_max}	-40°C	175°C	175°C for 10s See latest power module datasheet
Wait time after short circuit	SC	0.5s	-	
PCB Temperature	T_{PCB}		150°C	
Switching frequency	f_{sw}		12 kHz	Thermal limited by T_{PCB}. 8kHz @ 105°C ambient temperature and no active PCB cooling

3.3 Key Features

The key features can be summarized:

- Full inverter evaluation kit for xEV main inverter applications (up to 150 kW).
- Automotive power module HybridPACK™ Drive with 820A, 750V EDT2 IGBT/Diode chipset. FS820R08A6P2xx.
- Automotive isolated gate driver with programmable features.
  EICEDriver™ Sense 1EDI2010AS/Lite 1EDI2015AS and Boost 1EBN1002AE.
- IGBT desaturation (short circuit) detection.
- IGBT overvoltage protection via active collector gate clamping (<750Vces clamping).
- All programmable functions from the EiceDRIVER™ via SPI communication.
- Digital NTC temperature measurement with R2f converter featured by EiceDRIVER™ (requires SPI communication).
- 2x redundant digital DC-Link voltage measurement up to 550V_{DC}.
- AURIX™ family 32-bit microcontroller TC277: 32-Bit multi-core TriCoreTM microcontroller

3.4 Limitations of the Evaluation Kit

The evaluation kit should not be regarded as a protected system. It was designed for evaluation under lab conditions with minimum automatic shutdown routines. The design was intended to be usable also under extreme conditions where protection mechanism would limit the evaluation possibilities. The evaluation kit is e.g. not protected against:

- Over- & undervoltages on the signal connectors.
- Overvoltages of the HV working voltage
  (>500V for longer 10s should be avoided; >550V may damage the clamping diodes)
- Overtemperature of the PCB and Module.
  The power module NTC temperature info is readed as a digital signal, but no shutdown limit is set.
- Testing at higher switching frequencies than 8 kHz may require an active cooling of the gate driver board at higher ambient temperatures.

Please note that the list are giving examples and should not be seen exhaustive.

3.5 Key Components List

Some of the key components are not in the focus of this manual. Nevertheless besides the power module and gate driver other active and passive components can be tested/evaluated under real application conditions.

Table 2 Key components list.

Part Number	Manufacturer	Description / Implementation
FS820R08A6P2B (FS820R08A6P2LB for HybridKit Drive Sense)	Infineon	Automotive **HybridPACK™ Drive** power module with 750V EDT2 IGBT
1EDI2010AS & 1EDI2015AS	Infineon	Automotive Isolated Gate Driver EICEDriver™ Sense & Lite
1EBN1001AE OR 1EBN1002AE	Infineon	Automotive Booster Stage EICEDriver™ Boost Automotive Booster Stage EICEDriver™ Boost Lite
TC277	Infineon	Automotive AURIX™ micro-controller. 32-bit multi-core TriCore
B25655P5507K***	TDK/Epcos	Automotive PCC DC-Link Capacitor 500V, 500µF
P100403-A1	TDK/Epcos	Automotive Transformer 1:1.08 with large clearance creepage distances. PCB is also compatible to Epcos T7509_A1_01 transformer.
HAH3DR 800-S07 only for HybridKit Drive Sense	LEM	Automotive Current Transducer in Hall open loop technology

4 Quickstart Guide (DEMO-MODE)

This chapter explains briefly about the recommended lab equipment and how to enable the DEMO-MODE. This is a basic open loop inverter operation, which requires no additional software tools or communication. This mode is only recommended in combination with passive loads. Experienced engineers can drive also asynchronous machines, when special safety measures are applied at the lab testbench. E.g. all possible output voltages, frequencies and power must be compatible with the load. Please ensure an appropriate current/power/voltage limit of the source. It can happen at any time that the inverter changes the output condtions and/or stops immediatly.

4.1 Recommended equipment for evaluation

In order to perform evaluation tests with the HybridKit Drive following equipment is mimimum recommended.

- Power Supply: 8-18V, 2A.
- Power Source: minimum 40V/5A.
  up to 500V/500A depending on evaluation tests.
- Load: passive 3ph inductive load or alternative
  3ph asynchronous (induction) machine.
- Scope: 4 channel scope.
- Cooling system: Optional for light load tests.
  For high power tests use cooling with 10L/min and <2bar absolute pressure operation.

Note: Operation with synchronous machines may be possible but is not recommended in DEMO-MODE. Please use such machine types only with appropriate motor control.

4.2 Connecting the Evaluation Kit (supply and load)

The right connection of power supplies and loads is shown in Figure 3a. The high voltage source has to be connected at the capacitor. Depending on the required currents for the evaluation tests it can be required to mount a busbar over all DC-, DC+ connections. Some busbar examples for high power load tests are shown in Figure 3b and c. For low loads and high power short term operation it is typically enough to connect the highvoltage source only at the center DC-Link connections with the cable shoes included in the standard shipping content of the evaluation kit.

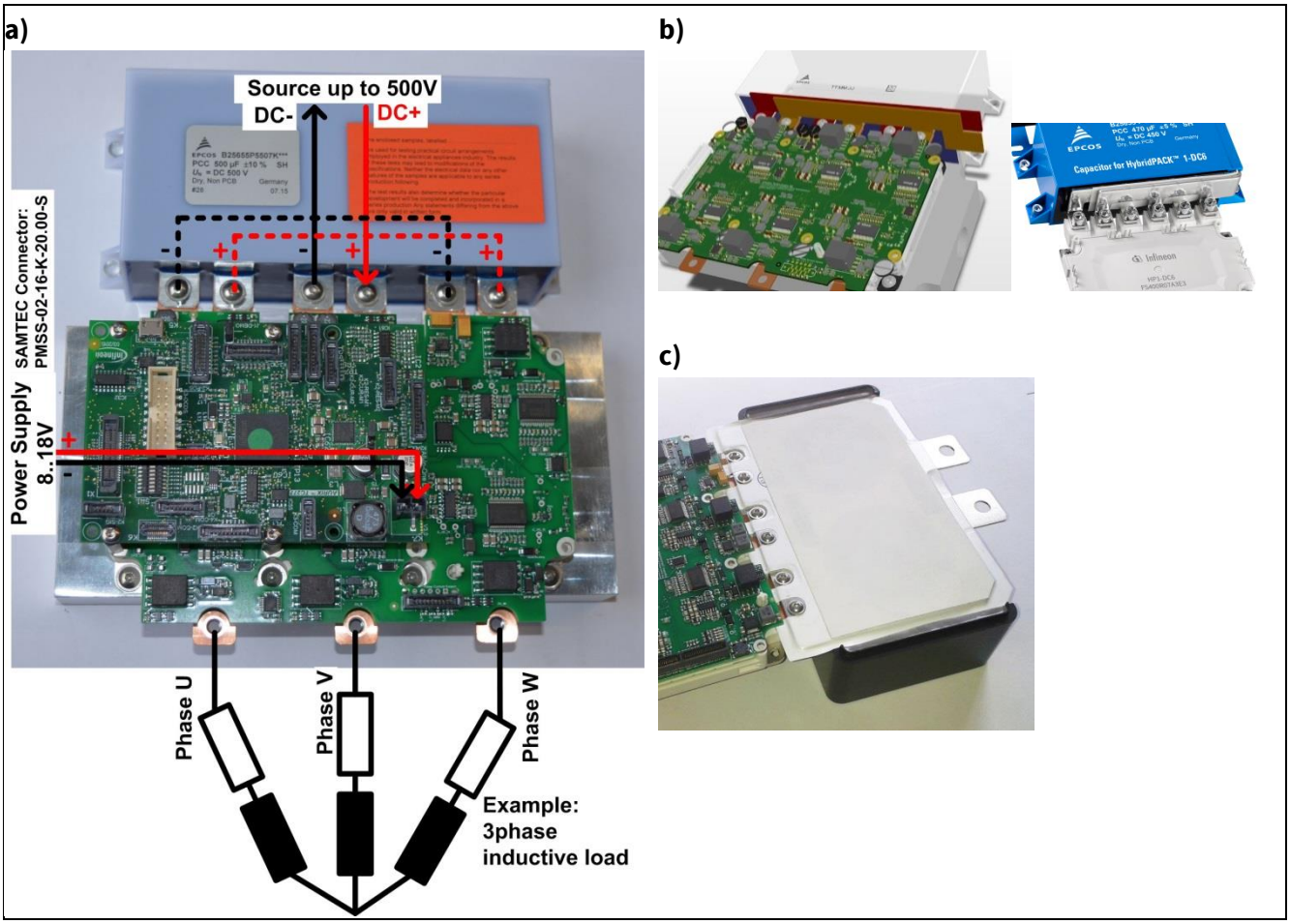

Figure 3 Typical apearance of the evaluation kit and required power supply and load connections (a). For long term high power load tests a busbar with appropriate current carriying capability may be required at the DC terminals. Concepts with additional external busbars are shown in (b), example shows solutions from TDK/Epcos [2]. Concepts with busbars integrated in the capacitor is shown in (c), example shows a solution from SB Electronics [3].

4.3 Connecting the Evaluation Kit (cooling system)

The cooler can be connected via the ½ inch G series British standard pipe interface as shown in Figure 4. Please use as cooling fluid 50% water / 50% ethylenglycol and ensure that the cooling fluid corrosion protection is compatible with aluminium cooler and Ni plated baseplate (like typical released automotive cooling mixtures). Do not use pure water cooling fluids as it might damage the power module and reference cooler.

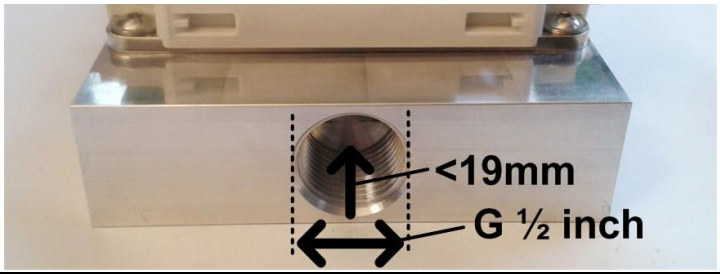

Figure 4 Typical apearance of the evaluation kit and the cooling system interface.

4.4 How to enable DEMO-MODE (required connectors)

For enabling the DEMO-MODE following conditions are required:

1) Turn-off all power supplies.
2) Connect power supplies to the HybridKit Drive (see Figure 3).
3) Place DEMO-ENABLE-PLUG (see Figure 5).
4) Place DEMO-CONTROL-PLUG (see Figure 6).
5) Turn potentiometers for modulation index and output frequency to low position. (i.e. pin 1 & pin2 are connected to GND; see Figure 6)
6) Turn-on logic supply (8..18V). Within the next 3 seconds the inverter starts the operation.
7) Turn-on high voltage supply (<500V).
8) **The inverter is fully operating and can now be controlled by the potis or external analog 0...5V signals (modulation index and output frequency).**

The section 5 explains the functionality of the DEMO-MODE based on a measured examples.

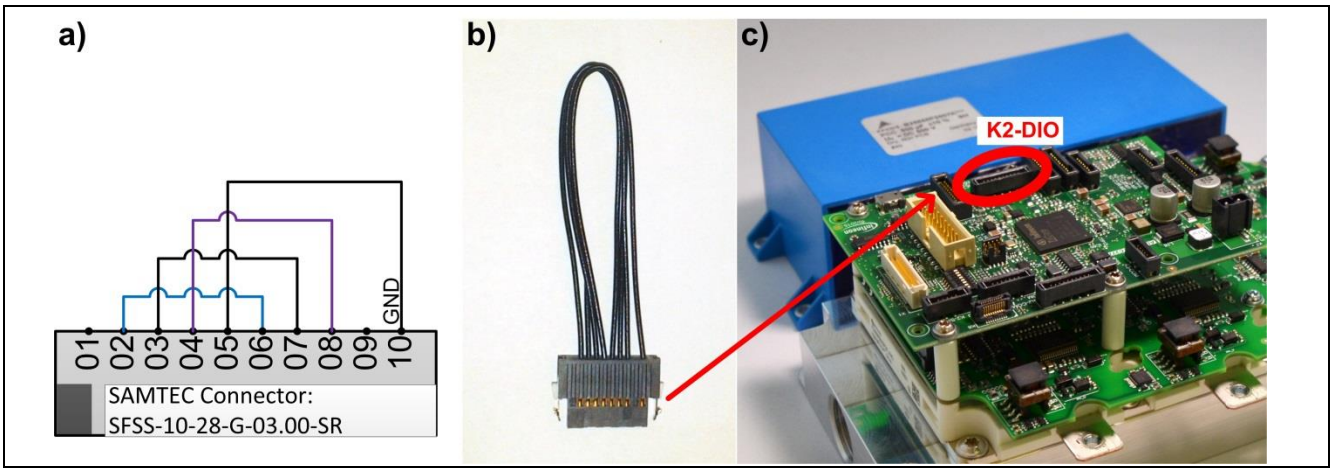

Figure 5 Required DEMO-ENABLE-PLUG. Circuit (a). Example (b). Plug has to be connected into the logic board connector K2-DIO (c).

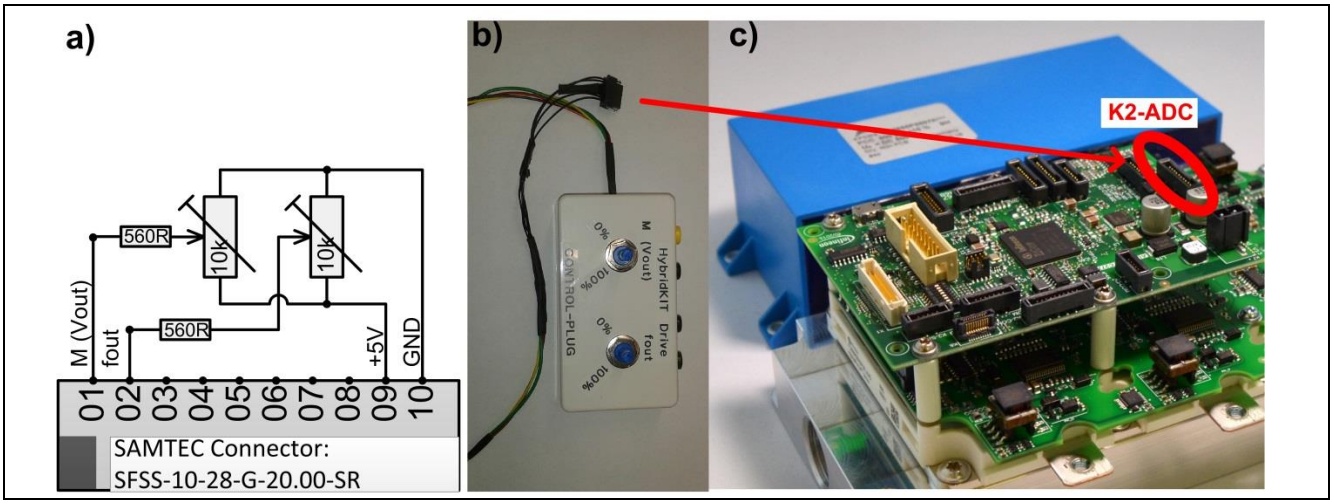

Figure 6 Recommended DEMO-CONTROL-PLUG (a) and (b). The right position of the plug on the logic board connector K2-ADC is indicated in (c).

With the DEMO-CONTROL-PLUG of Figure 6, the modulation index (and thus phase output voltage) as well as output frequency can be adjusted. Optional an external 0…5V analog signal can be used, which overrule the poti positions and is useful in case reproduceable operating conditions are desired for a test.

5 Explanation of DEMO-MODE functions

Only the modulation index and the output frequency can be adjusted in the DEMO-MODE. All other parameters, like switching frequency, dead times, gate driver setting, etc. are set to pre-defined default values from the evaluation kit software. Thus it should be clear that such default values should not be regarded as optimized parameters, but can be used as a system design starting point and would be compatible to most load and operating conditions.

5.1 Adjusting the Modulation Index

The modulation index can be adjusted by the analog 0..5V signal on pin 1 on the DEMO-CONTROL-PLUG. At the beginning this signal is always low, otherwise the logic board will not enter this DEMO-MODE. Than the signal can be adjusted between 0 and 5V and the modulation index of the space vector modulation follows linear from 0% and 100%. In order to ensure a smooth operation a simple ramp-up and ramp-down function is implemented as it can be seen in Figure 7.
At time 0ms the modulation set value is adjusted rapidly from 0V to 5V. The internal ramp function limits the speed and controls the modulation index within 4 seconds from 0% to 100%. In the zoom pictures the resulting phase to phase output voltage at 400V dc working voltage can be seen. At about 3.5 seconds it can be seen, that the space vector modulation comes in the so called overmodulation range resulting in a slight trapeziodial waveform. Not shown but similar would be a ramp down event.

In summary, the operator can adjust the phase to phase output voltage by the modulation index within the limits of the applied working voltage (i.e. DC-Link voltage). By adjusting the output voltage the currents are also changed depending on the impedance of the load.

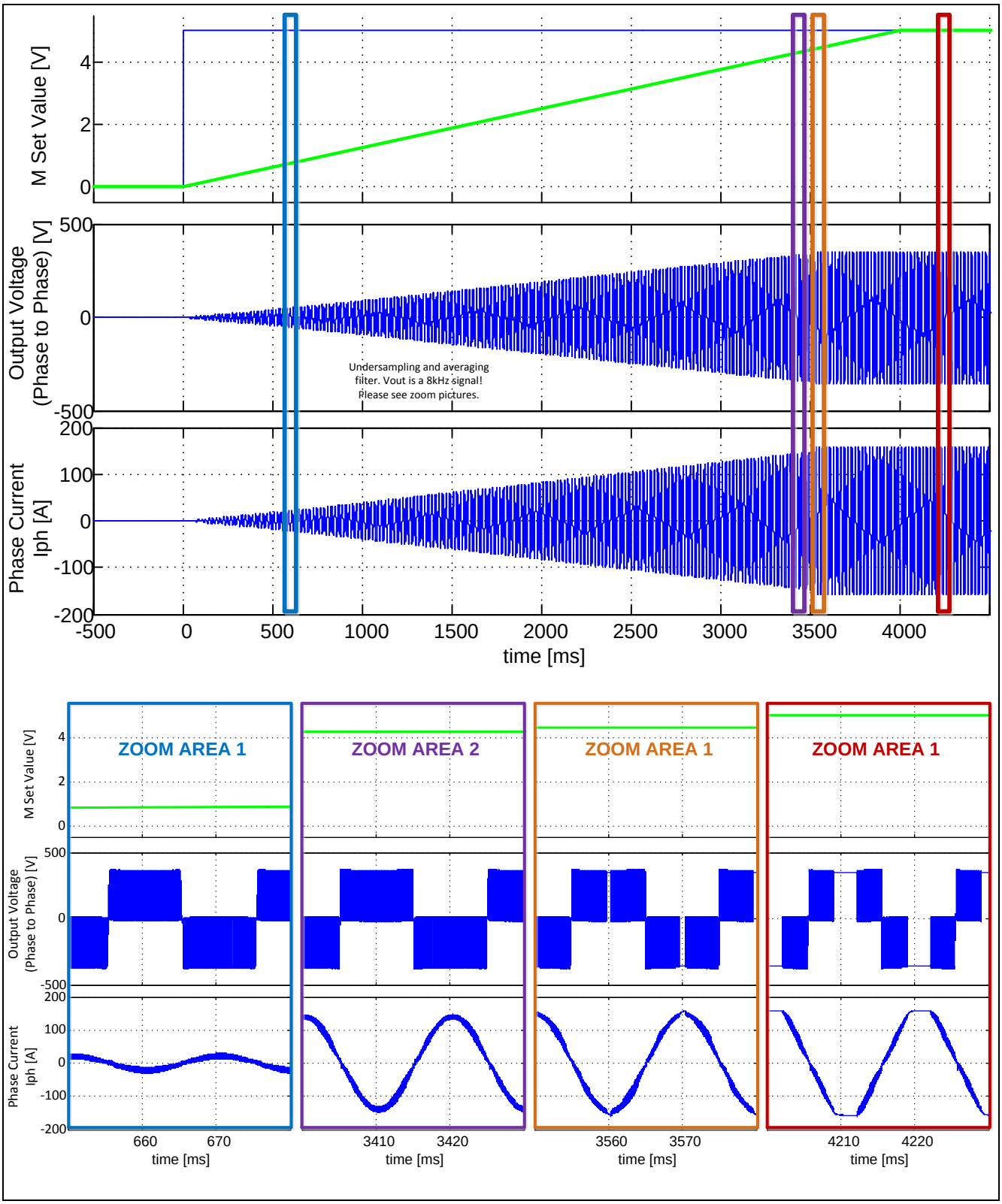

Figure 7 Measured event, where operator changes the modulation set value rapidly from 0V to 5V. The internal ramp function ensures a smooth transition from 0% to 100% modulation index. The modulated phase to phase output voltage is consequently increased within the limits of the applied system working voltage.

5.2 Adjusting the Output Frequency

The output frequency can be adjusted in similar way as the modulation index. An real example is shown in Figure 8. The 0..5V voltage signal on pin 2 of the DEMO-CONTROL-PLUG sets the output frequency to the load. A ramp function also ensure a smooth transition when a new setpoint is applied (see smooth actual fout value in green). The frequency is ramped within 10 seconds from nearly 0Hz to 100Hz, which are the pre-defined standard values in the software.

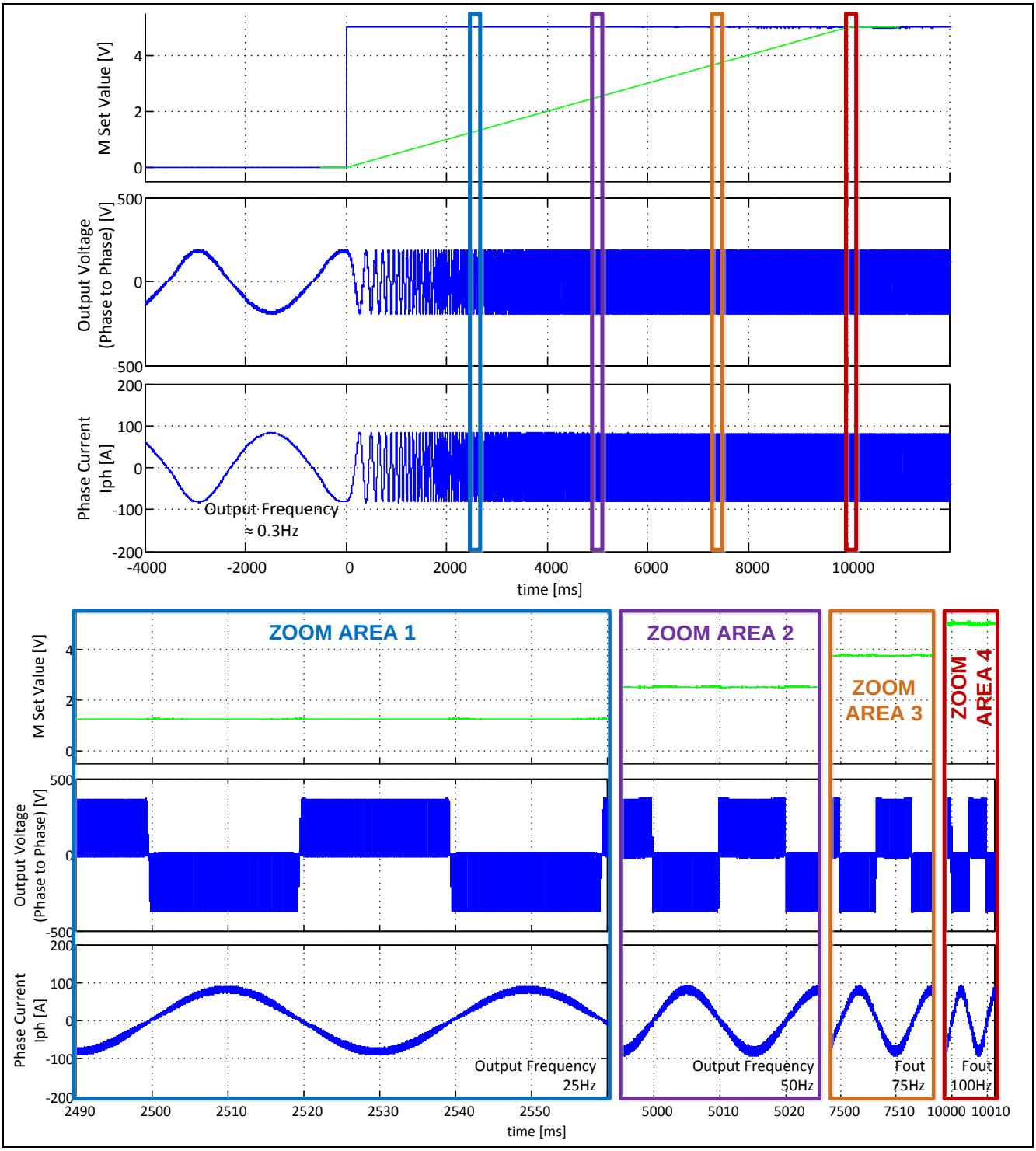

Figure 8 Measured event, where operator changes the output frequency set value rapidly from 0V to 5V. The internal ramp function ensures a smooth transition from nearly 0Hz to 100Hz output.

6 References and Revision History

The referenced application notes can be found at http://www.infineon.com

[1] Infineon Application Note AN-HPD-ASSEMBLY, “Assembly Instructions for the HybridPACK Drive”.

[2] TDK/Epcos Capacitor “B25655P5507K***” .

[3] SBE Electronics Capacitor “700D50794-204” OR “700D50795-186” .

Revision History

Date	Version	Changed By	Change Description
2015-10	0.1	Tomas Reiter (IFAG ATV HP EDT AE)	DRAFT Version
2015-11	0.2	T. Reiter	Extended draft. How to order chapter extended. Added info about busbar for high power loads. new appnote template
2016-02	0.3	T. Reiter	Updated pictures and minor revisions
2016-03	1.0	T. Reiter	Updated SP order numbers. Minor revisions and removed NDA.

Trademarks of Infineon Technologies AG
AURIX™, C166™, CanPAK™, CIPOS™, CoolGaN™, CoolMOS™, CoolSET™, CoolSiC™, CORECONTROL™, CROSSAVE™, DAVE™, DI-POL™, DrBlade™, EasyPIM™, EconoBRIDGE™, EconoDUAL™, EconoPACK™, EconoPIM™, EiceDRIVER™, eupec™, FCOS™, HITFET™, HybridPACK™, Infineon™, ISOFACE™, IsoPACK™, i-Wafer™, MIPAQ™, ModSTACK™, my-d™, NovalithIC™, OmniTune™, OPTIGA™, OptiMOS™, ORIGA™, POWERCODE™, PRIMARION™, PrimePACK™, PrimeSTACK™, PROFET™, PRO-SIL™, RASIC™, REAL3™, ReverSave™, SatRIC™, SIEGET™, SIPMOS™, SmartLEWIS™, SOLID FLASH™, SPOC™, TEMPFET™, thinQ!™, TRENCHSTOP™, TriCore™.

Trademarks updated August 2015

Other Trademarks
All referenced product or service names and trademarks are the property of their respective owners.

Edition <2016-03-24>

Published by

Infineon Technologies AG

81726 Munich, Germany

© 2016 Infineon Technologies AG. All Rights Reserved.

Do you have a question about this document?

Email: erratum@infineon.com

Document reference

AN-HPDKIT-QUICKSTART

IMPORTANT NOTICE

The information contained in this application note is given as a hint for the implementation of the product only and shall in no event be regarded as a description or warranty of a certain functionality, condition or quality of the product. Before implementation of the product, the recipient of this application note must verify any function and other technical information given herein in the real application. Infineon Technologies hereby disclaims any and all warranties and liabilities of any kind (including without limitation warranties of non-infringement of intellectual property rights of any third party) with respect to any and all information given in this application note.

The data contained in this document is exclusively intended for technically trained staff. It is the responsibility of customer's technical departments to evaluate the suitability of the product for the intended application and the completeness of the product information given in this document with respect to such application.

For further information on the product, technology, delivery terms and conditions and prices please contact your nearest Infineon Technologies office (**www.infineon.com**).

WARNINGS

Due to technical requirements products may contain dangerous substances. For information on the types in question please contact your nearest Infineon Technologies office.

Except as otherwise explicitly approved by Infineon Technologies in a written document signed by authorized representatives of Infineon Technologies, Infineon Technologies' products may not be used in any applications where a failure of the product or any consequences of the use thereof can reasonably be expected to result in personal injury.