Farnell AN AVNET COMPANY Newark AN AVNET COMPANY element14

EN - For pricing and availability in your local country please visit one of the below links:

DE - Informationen zu Preisen und Verfügbarkeit in Ihrem Land erhalten Sie über die unten aufgeführten Links:

FR - Pour connaître les tarifs et la disponibilité dans votre pays, cliquez sur l'un des liens suivants:

ADG901BRMZ . ADG902BRMZ . EVAL-ADG901EBZ. EVAL-ADG901EBZ EVAL-ADG902EBZ

ADG901BCPZ-500

EN
This Datasheet is presented by the manufacturer

DE
Dieses Datenblatt wird vom Hersteller bereitgestellt

FR
Cette fiche technique est présentée par le fabricant

Wideband, 40 dB Isolation at 1 GHz, CMOS 1.65 V to 2.75 V, SPST Switches

Data Sheet **ADG901/ADG902**

FEATURES

- Wideband switch: −3 dB at 4.5 GHz
- ADG901—absorptive switch
- ADG902—reflective switch
- High off isolation: 40 dB at 1 GHz
- Low insertion loss: 0.8 dB at 1 GHz
- Single 1.65 V to 2.75 V power supply
- CMOS/LVTTL control logic
- 8-lead MSOP and tiny 3 mm × 3 mm LFCSP packages
- Low power consumption (<1 µA)

APPLICATIONS

- Wireless communications
- General purpose RF switching
- Dual-band applications
- High speed filter selection
- Digital transceiver front-end switch
- IF switching
- Tuner modules
- Antenna diversity switching list

FUNCTIONAL BLOCK DIAGRAM

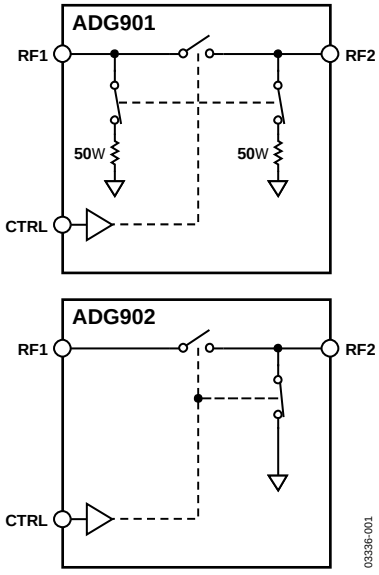

Figure 1.

GENERAL DESCRIPTION

The ADG901/ADG902 are wideband switches that use a CMOS process to provide high isolation and low insertion loss to 1 GHz. The ADG901 is an absorptive (matched) switch with 50 Ω terminated shunt legs, while the ADG902 is a reflective switch. These devices are designed such that the isolation is high over the dc to 1 GHz frequency range. They have on-board CMOS control logic, thus eliminating the need for external controlling circuitry. The control inputs are both CMOS and LVTTL compatible. The low power consumption of these CMOS devices makes them ideally suited to wireless applications and general-purpose high frequency switching.

PRODUCT HIGHLIGHTS

1. −40 dB Off Isolation at 1 GHz
2. 0.8 dB Insertion Loss at 1 GHz
3. Tiny 8-Lead MSOP/LFCSP Packages

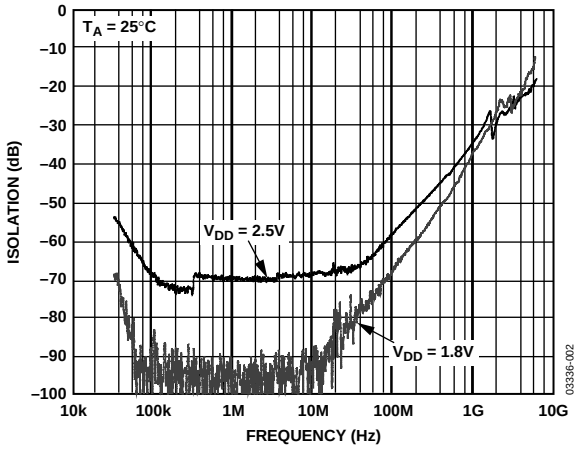

Figure 2. Off Isolation vs. Frequency

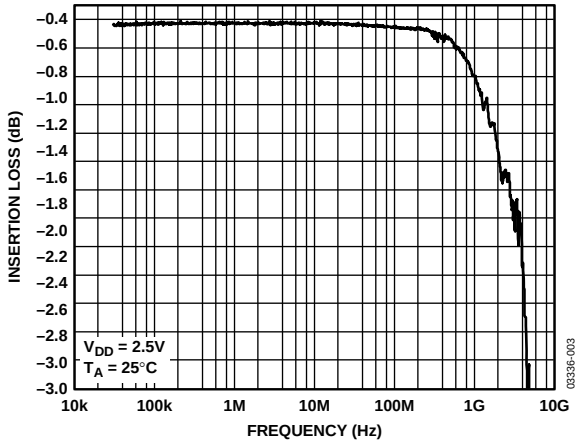

Figure 3. Insertion Loss vs. Frequency

Rev. C
Document Feedback

Information furnished by Analog Devices is believed to be accurate and reliable. However, no responsibility is assumed by Analog Devices for its use, nor for any infringements of patents or other rights of third parties that may result from its use. Specifications subject to change without notice. No license is granted by implication or otherwise under any patent or patent rights of Analog Devices. Trademarks and registered trademarks are the property of their respective owners.

One Technology Way, P.O. Box 9106, Norwood, MA 02062-9106, U.S.A.
Tel: 781.329.4700 ©2005–2016 Analog Devices, Inc. All rights reserved.
Technical Support www.analog.com

TABLE OF CONTENTS

Features 1
Applications 1
Functional Block Diagram 1
General Description 1
Product Highlights 1
Revision History 2
Specifications 3
Absolute Maximum Ratings 4
ESD Caution 4
Pin Configurations and Function Descriptions 5
Typical Performance Characteristics 6
Terminology 8
Test Circuits 9
Applications Information 10
Absorptive vs. Reflective Switches 10
ADG901/ADG902 Evaluation Board 11
Outline Dimensions 12
Ordering Guide 13

REVISION HISTORY

5/2016—Rev. B to Rev. C

Changes to Figure 4 and Table 3 5
Added Figure 5; Renumbered Sequentially 5
Updated Outline Dimensions 12
Changes to Ordering Guide 13

10/2005—Rev. A to Rev. B

Changes to Figure 1 1
Changes to Table 1 3
Changes to Ordering Guide 12

10/2004—Rev. 0 to Rev. A

Changes to Features 1
Changes to Product Highlights 1
Changes to Specifications 2
Changes to Ordering Guide 3
Change to ADG9xx Evaluation Board Section 9
Changes to Ordering Guide 10

8/2003—Revision 0: Initial Version

SPECIFICATIONS

V_{DD} = 1.65 V to 2.75 V, GND = 0 V, input power = 0 dBm, all specifications T_{MIN} to T_{MAX}, unless otherwise specified.[1]

Table 1.

Parameter	Symbol	Test Conditions/Comments	B Version Min	B Version Typ[2]	B Version Max	Unit
AC ELECTRICAL CHARACTERISTICS						
Operating Frequency[3]			DC		2.5	GHz
−3 dB Frequency[4]					4.5	GHz
Input Power[4]		0 V dc bias			7	dBm
		0.5 V dc bias			16	dBm
Insertion Loss	S_{21}, S_{12}	DC to 100 MHz; V_{DD} = 2.5 V ± 10%		0.4	0.7	dB
		500 MHz; V_{DD} = 2.5 V ± 10%		0.5	0.8	dB
		1000 MHz; V_{DD} = 2.5 V ± 10%		0.8	1.25	dB
Isolation—RF1 to RF2	S_{21}, S_{12}	100 MHz	60	61		dB
CP Package		500 MHz	43	45		dB
		1000 MHz	34	40		dB
Isolation—RF1 to RF2	S_{21}, S_{12}	100 MHz	51	60		dB
RM Package		500 MHz	37.5	47		dB
		1000 MHz	31	37		dB
Return Loss (On Channel)[4]	S_{11}, S_{22}	DC to 100 MHz	20	28		dB
		500 MHz	23	29		dB
		1000 MHz	25	28		dB
Return Loss (Off Channel)[4]	S_{11}, S_{22}	DC to 100 MHz	18	23		dB
		500 MHz	17	21		dB
		1000 MHz	15	19		dB
On Switching Time[4]	t_{ON}	50% CTRL to 90% RF		3.6	6	ns
Off Switching Time[4]	t_{OFF}	50% CTRL to 10% RF		5.8	9.5	ns
Rise Time[4]	t_{RISE}	10% to 90% RF		3.1	5.5	ns
Fall Time[4]	t_{FALL}	90% to 10% RF		6.0	8.5	ns
1 dB Compression[4]	$P_{-1\ dB}$	1000 MHz		17		dBm
Third-Order Intermodulation Intercept	IP3	900 MHz/901 MHz, 4 dBm	28.5	36		dBm
Video Feedthrough[5]				2.5		mV p-p
DC ELECTRICAL CHARACTERISTICS						
Input High Voltage	V_{INH}	V_{DD} = 2.25 V to 2.75 V	1.7			V
	V_{INH}	V_{DD} = 1.65 V to 1.95 V	0.65 V_{DD}			V
Input Low Voltage	V_{INL}	V_{DD} = 2.25 V to 2.75 V			0.7	V
	V_{INL}	V_{DD} = 1.65 V to 1.95 V			0.35 V_{DD}	V
Input Leakage Current	I_I	$0 \le V_{IN} \le 2.75$ V		±0.1	±1	µA
CAPACITANCE[4]						
RF1/RF2, RF Port On Capacitance	C_{RF} on	f = 1 MHz		1.2		pF
CTRL Input Capacitance	C_{CTRL}	f = 1 MHz		2.1		pF
POWER REQUIREMENTS						
V_{DD}			1.65		2.75	V
Quiescent Power Supply Current	I_{DD}	Digital inputs = 0 V or V_{DD}		0.1	1	µA

[1] Temperature range for B version: −40°C to +85°C.
[2] Typical values are at V_{DD} = 2.5 V and 25°C, unless otherwise specified.
[3] Point at which insertion loss degrades by 1 dB.
[4] Guaranteed by design, not subject to production test.
[5] The dc transience at the output of any port of the switch when the control voltage is switched from high to low or low to high in a 50 Ω test setup, measured with 1 ns rise time pulses and 500 MHz bandwidth.

ABSOLUTE MAXIMUM RATINGS

T_A = 25°C, unless otherwise specified.

Table 2.

Parameter	Rating
V_{DD} to GND	−0.5 V to +4 V
Inputs to GND	−0.5 V to V_{DD} + 0.3 V[1]
Continuous Current	30 mA
Input Power	18 dBm
Operating Temperature Range	
Industrial (B Version)	−40°C to +85°C
Storage Temperature Range	−65°C to +150°C
Junction Temperature	150°C
MSOP Package	
θ_{JA} Thermal Impedance	206°C/W
LFCSP Package	
θ_{JA} Thermal Impedance (2-Layer Board)	84°C/W
θ_{JA} Thermal Impedance (4-Layer Board)	48°C/W
Lead Temperature, Soldering (10 sec)	300°C
IR Reflow, Peak Temperature (<20 sec)	235°C
ESD	1 kV

[1] RF1/RF2 off port inputs to ground: −0.5 V to V_{DD} − 0.5 V.

Stresses at or above those listed under Absolute Maximum Ratings may cause permanent damage to the product. This is a stress rating only; functional operation of the product at these or any other conditions above those indicated in the operational section of this specification is not implied. Operation beyond the maximum operating conditions for extended periods may affect product reliability.

ESD CAUTION



ESD (electrostatic discharge) sensitive device. Charged devices and circuit boards can discharge without detection. Although this product features patented or proprietary protection circuitry, damage may occur on devices subjected to high energy ESD. Therefore, proper ESD precautions should be taken to avoid performance degradation or loss of functionality.

PIN CONFIGURATIONS AND FUNCTION DESCRIPTIONS

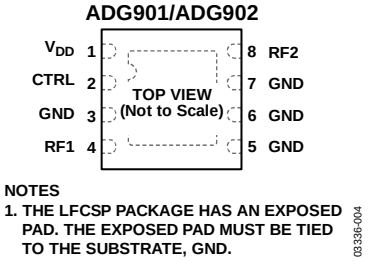

Figure 4. 8-Lead LFCSP Pin Configuration

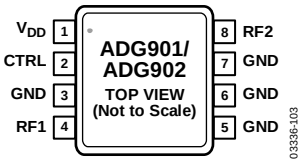

Figure 5. 8-Lead MSOP Pin Configuration

Table 3. Pin Function Descriptions

Pin No.	Mnemonic	Description
1	V_{DD}	Power Supply Input. These devices can be operated from 1.65 V to 2.75 V; decouple V_{DD} to GND.
2	CTRL	CMOS or LVTTL Logic Level. CTRL input must not exceed V_{DD}.
		Logic 0: RF1 isolated from RF2.
		Logic 1: RF1 to RF2.
3, 5, 6, 7	GND	Ground Reference Point for All Circuitry on the Device.
4	RF1	RF1 Port.
8	RF2	RF2 Port.
	EPAD	Exposed Pad. The LFCSP package has an exposed pad. The exposed pad must be tied to the substrate, GND.

Table 4. Truth Table

CTRL	Signal Path
0	RF1 isolated from RF2
1	RF1 to RF2

TYPICAL PERFORMANCE CHARACTERISTICS

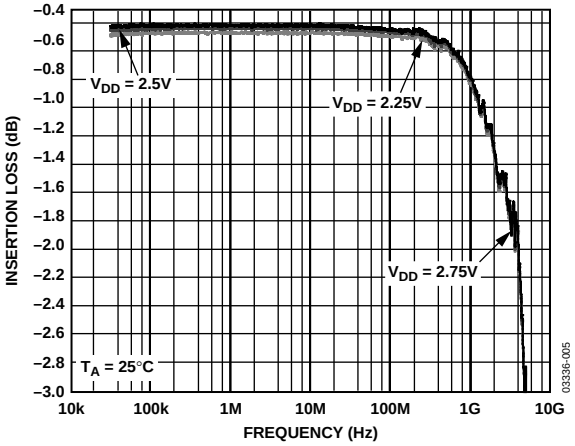

Figure 6. Insertion Loss vs. Frequency over Supplies (S12 and S21)

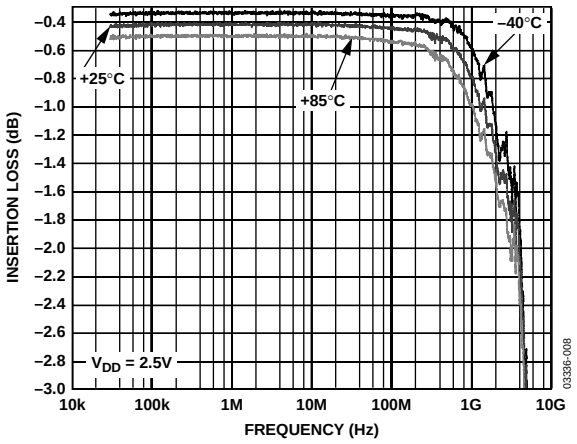

Figure 9. Insertion Loss vs. Frequency over Temperature (S12 and S21)

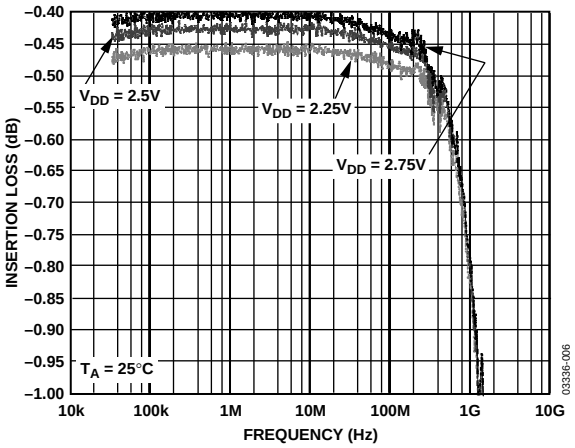

Figure 7. Insertion Loss vs. Frequency over Supplies (S12 and S21) (Zoomed Figure 5 Plot)

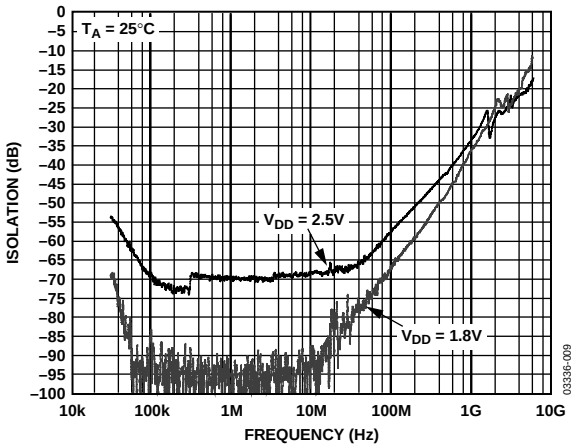

Figure 10. OFF Isolation vs. Frequency over Supplies (S12 and S21)

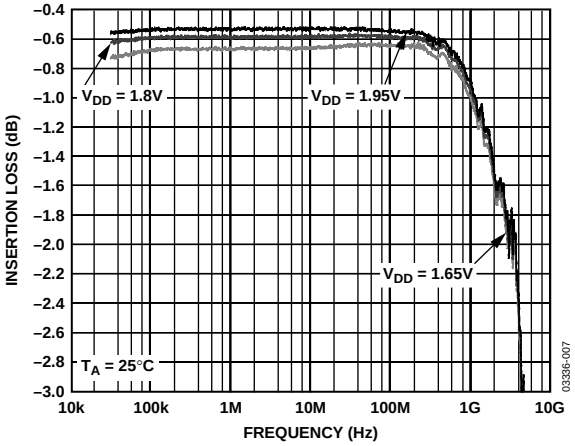

Figure 8. Insertion Loss vs. Frequency over Supplies (S12 and S21)

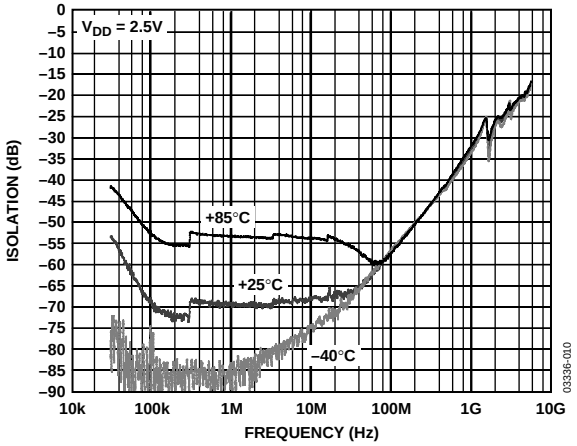

Figure 11. Off Isolation vs. Frequency over Temperature (S12 and S21)

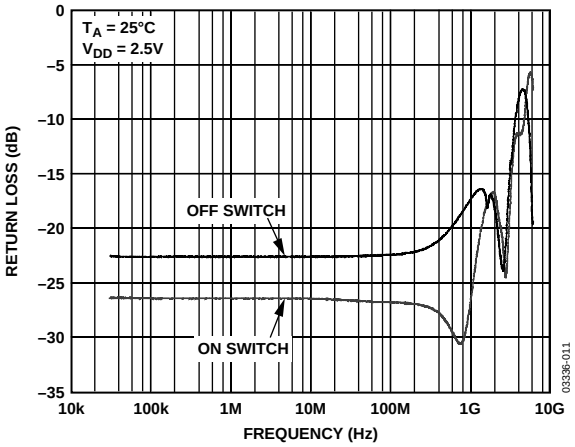

Figure 12. Return Loss vs. Frequency (S11)

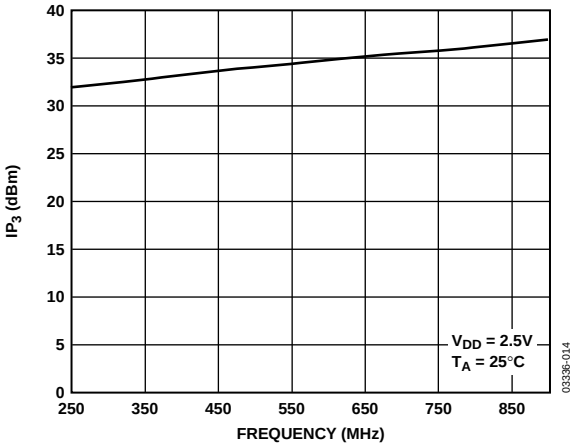

Figure 15. IP_3 vs. Frequency

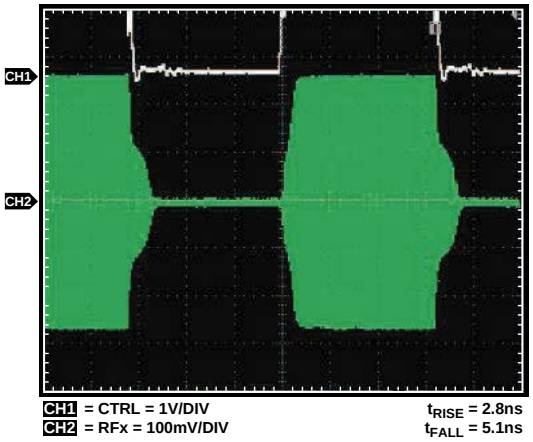

Figure 13. Switch Timing

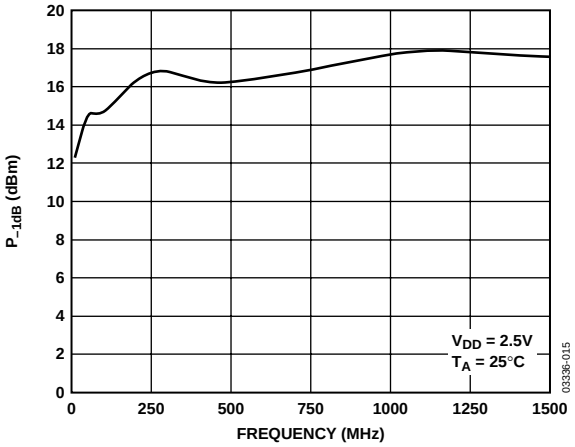

Figure 16. P_{-1dB} vs. Frequency

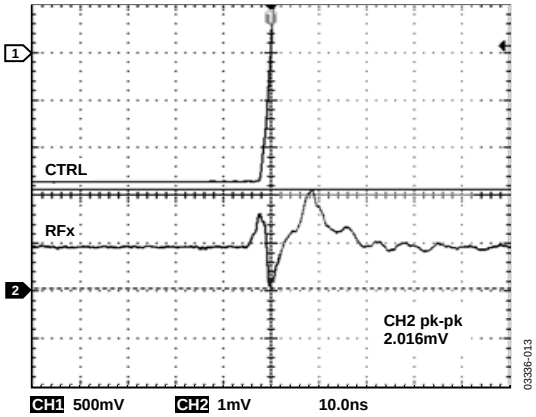

Figure 14. Video Feedthrough

TERMINOLOGY

V_{DD}
Most positive power supply potential.

I_{DD}
Positive supply current.

GND
Ground (0 V) reference.

CTRL
Logic control input.

V_{INL}
Maximum input voltage for Logic 0.

V_{INH}
Minimum input voltage for Logic 1.

$I_{IN}L$ (I_{INH})
Input current of the digital input.

C_{IN}
Digital input capacitance.

t_{ON}
Delay between applying the digital control input and the output switching on.

t_{OFF}
Delay between applying the digital control input and the output switching off.

t_{RISE}
Rise time. Time for the RF signal to rise from 10% to 90% of the on level.

t_{FALL}
Fall time. Time for the RF signal to fall from 90% to 10% of the on level.

Off Isolation
The attenuation between input and output ports of the switch when the switch control voltage is in the off condition.

Insertion Loss
The attenuation between input and output ports of the switch when the switch control voltage is in the on condition.

$P_{-1\ dB}$
1 dB compression point. The RF input power level at which the switch insertion loss increases by 1 dB over its low level value. It is a measure of how much power the on switch can handle before the insertion loss increases by 1 dB.

IP_3
Third-order intermodulation intercept. This is a measure of the power in false tones that occur when closely spaced tones are passed through a switch, whereby the nonlinearity of the switch causes these false tones to be generated.

Return Loss
The amount of reflected power relative to the incident power at a port. Large return loss indicates good matching. By measuring return loss the VSWR can be calculated from conversion charts. voltage standing wave ratio (VSWR) indicates the degree of matching present at a switch RF port.

Video Feedthrough
The spurious signals present at the RF ports of the switch when the control voltage is switched from high to low or low to high without an RF signal present.

TEST CIRCUITS

Similar setups for ADG902.

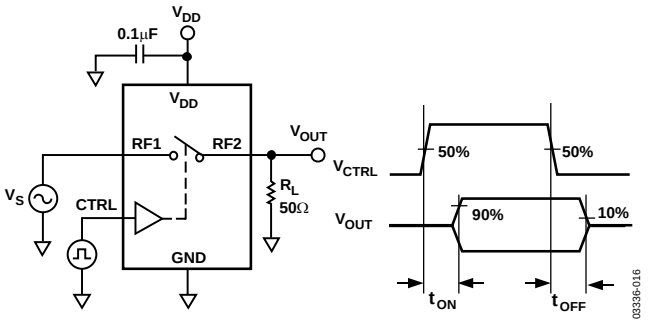

Figure 17. Switching Timing: t_{ON}, t_{OFF}

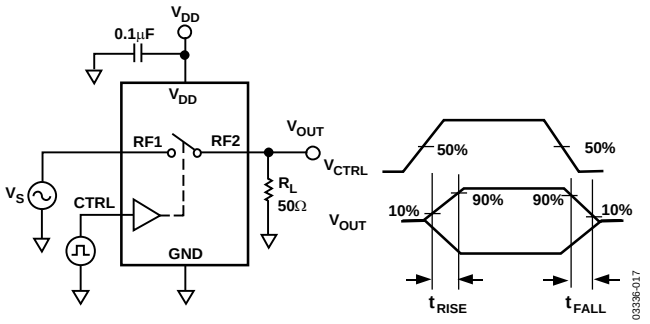

Figure 18. Switch Timing: t_{RISE}, t_{FALL}

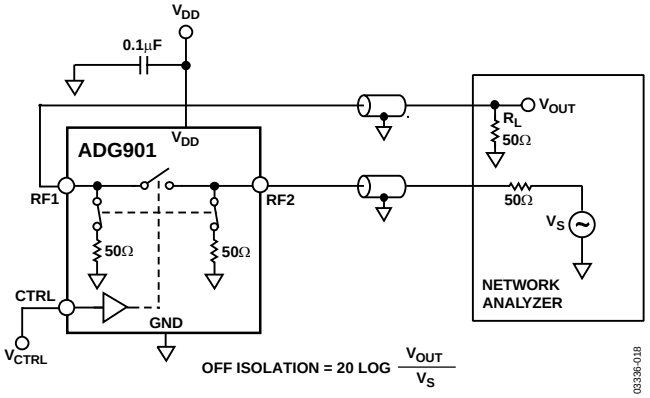

Figure 19. Off Isolation

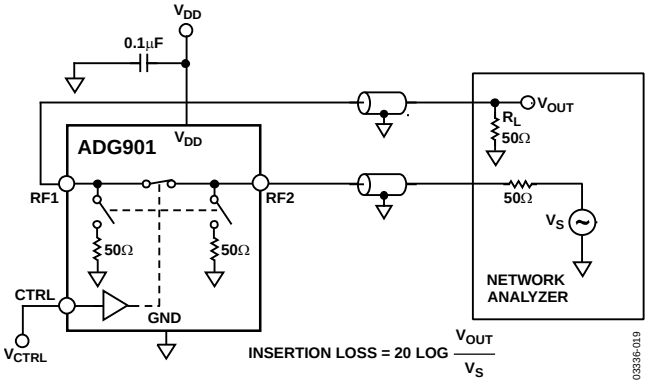

Figure 20. Insertion Loss

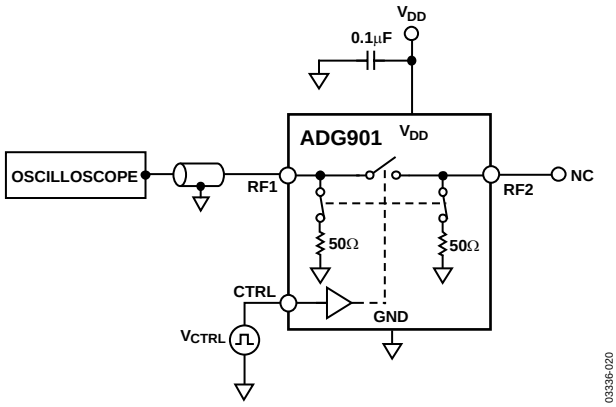

Figure 21. Video Feedthrough

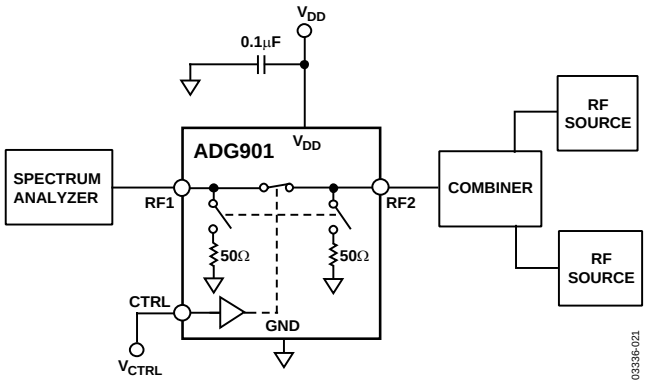

Figure 22. IP_3

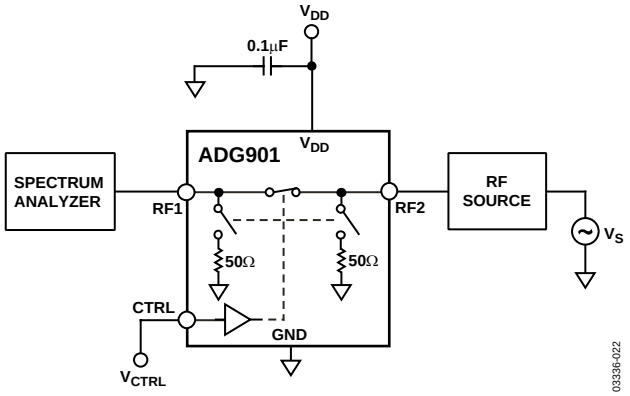

Figure 23. $P_{-1\ dB}$

APPLICATIONS INFORMATION

The ADG901/ADG902 are ideal solutions for low power, high frequency applications. The low insertion loss, high isolation between ports, low distortion, and low current consumption of these parts make them excellent solutions for many high frequency switching applications.

Applications include switching between high frequency filters, ASK generators, and FSK generators.

ABSORPTIVE vs. REFLECTIVE SWITCHES

The ADG901 is an absorptive (matched) switch with 50 Ω terminated shunt legs and the ADG902 is a reflective switch with 0 Ω terminated shunts to ground. The ADG901 absorptive switch has a good VSWR on each port, regardless of the switch mode. Use an absorptive switch when there is a need for a good VSWR that is looking into the port but not passing the through signal to the common port. The ADG901 is therefore ideal for applications that require minimum reflections back to the RF source. It also ensures that the maximum power is transferred to the load.

The ADG902 reflective switch is suitable for applications where high off port VSWR does not matter and the switch has some other desired performance feature. It can be used in many applications, including high speed filter selection. In most cases, an absorptive switch can be used instead of a reflective switch, but not vice versa.

ADG901/ADG902 EVALUATION BOARD

The ADG901/ADG902 evaluation board allows designers to evaluate the high performance wideband switches with a minimum of effort. To prove that these devices meet user requirements, the user requires only a power supply and a network analyzer along with the evaluation board. An application note is available with the evaluation board and provides complete information on operating the evaluation board.

The RF1 port (see Figure 24) is connected through a 50 Ω transmission line to the top left SMA Connector J1. RF2 is connected through a 50 Ω transmission line to the top SMA Connector J2. J3 is connected to GND. A through transmission line connects J4 and J5 and this transmission line is used to estimate the loss of the PCB over the environmental conditions being evaluated.

The board is constructed of a 4-layer, FR4 material with a dielectric constant of 4.3 and an overall thickness of 0.062 inches. Two ground layers with grounded planes provide ground for the RF transmission lines. The transmission lines were designed using a coplanar waveguide with ground plane model using a trace width of 0.052 inches, clearance to ground plane of 0.030 inches, dielectric thickness of 0.029 inches, and a metal thickness of 0.014 inches.

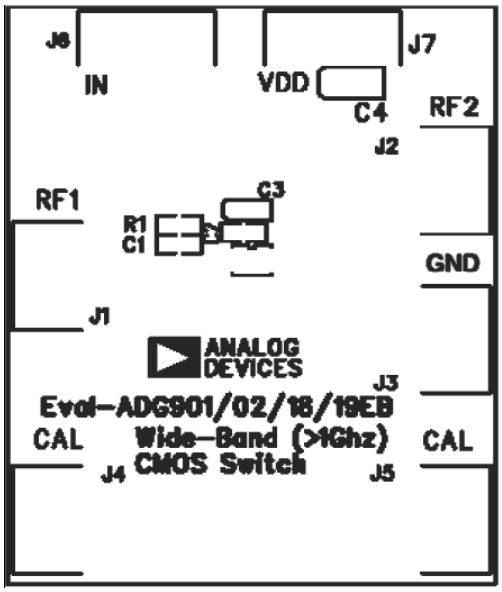

Figure 24. ADG901/ADG902 Evaluation Board Top View

OUTLINE DIMENSIONS

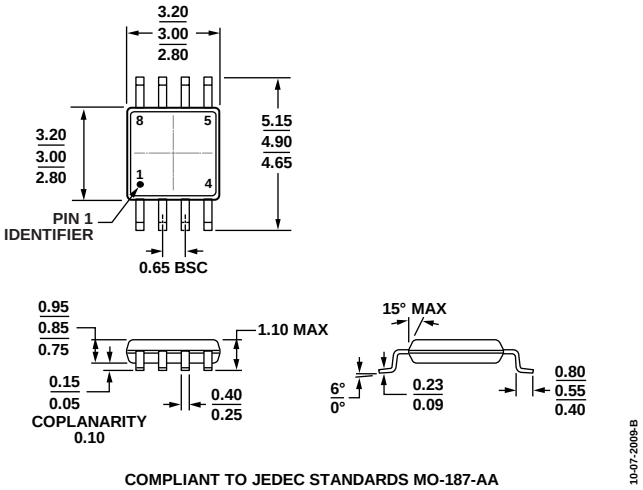

Figure 25. 8-Lead Mini Small Outline Package [MSOP]
(RM-8)
Dimensions shown in millimeters

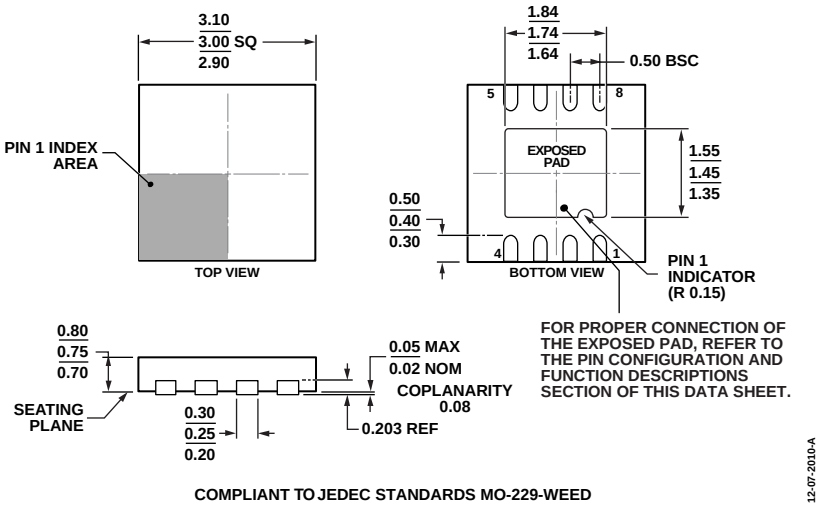

Figure 26. 8-Lead Lead Frame Chip Scale Package [LFCSP]
3 mm × 3 mm Body and 0.75 mm Package Height
(CP-8-13)
Dimensions shown in millimeters

ORDERING GUIDE

Model[1]	Temperature Range	Package Description	Package Option	Branding
ADG901BRM	−40°C to +85°C	8-Lead Mini Small Outline Package [MSOP]	RM-8	W6B
ADG901BRMZ	−40°C to +85°C	8-Lead Mini Small Outline Package [MSOP]	RM-8	S1T
ADG901BRMZ-REEL7	−40°C to +85°C	8-Lead Mini Small Outline Package [MSOP]	RM-8	S1T
ADG901BCPZ-500RL7	−40°C to +85°C	8-Lead Lead Frame Chip Scale Package [LFCSP]	CP-8-13	W6B
ADG902BRMZ	−40°C to +85°C	8-Lead Mini Small Outline Package [MSOP]	RM-8	S1V
EVAL-ADG901EBZ		Evaluation Board		
EVAL-ADG902EBZ		Evaluation Board		

[1] Z = RoHS Compliant Part.

NOTES

NOTES

NOTES

©2005–2016 Analog Devices, Inc. All rights reserved. Trademarks and registered trademarks are the property of their respective owners.
D03336-0-5/16(C)

RL7

Farnell AN AVNET COMPANY Newark AN AVNET COMPANY element14

EN - For pricing and availability in your local country please visit one of the below links:

DE - Informationen zu Preisen und Verfügbarkeit in Ihrem Land erhalten Sie über die unten aufgeführten Links:

FR - Pour connaître les tarifs et la disponibilité dans votre pays, cliquez sur l'un des liens suivants:

ADG901BRMZ . ADG902BRMZ . EVAL-ADG901EBZ. EVAL-ADG901EBZ EVAL-ADG902EBZ

ADG901BCPZ-500

EN
This Datasheet is presented by the manufacturer

DE
Dieses Datenblatt wird vom Hersteller bereitgestellt

FR
Cette fiche technique est présentée par le fabricant