LSU135/LSU135P/LSU155/LSU155P/LSU255/ LSU255P/LSU275/LSU275P/LSU375/LSU295/LSU395

Wet And Dry Vacuum Cleaner（干湿两用吸尘器）

OWNER'S MANUAL（使用说明书）

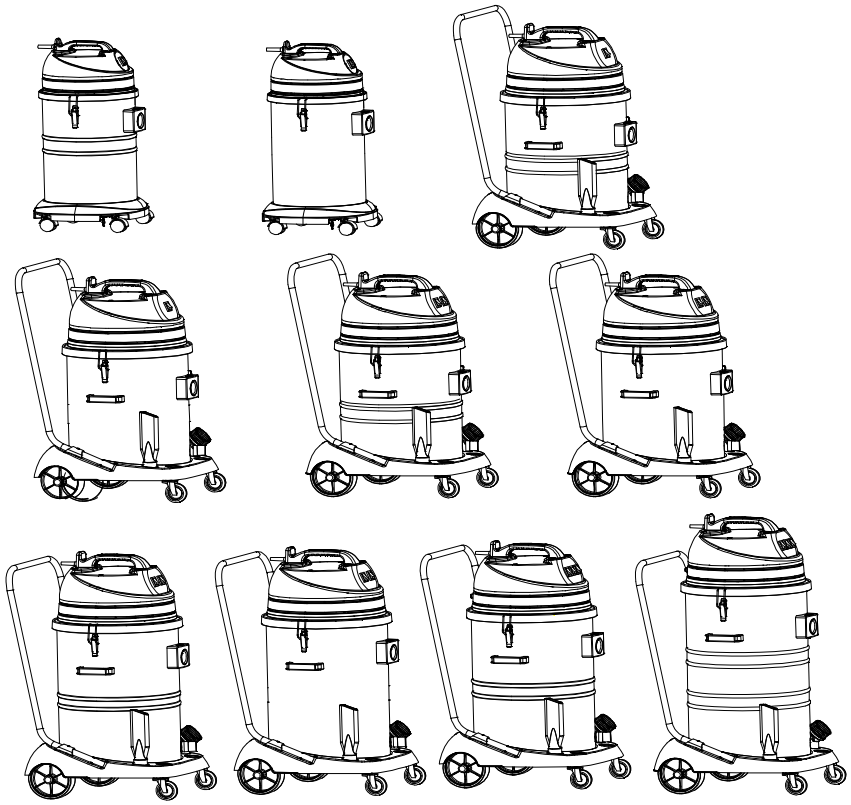

中文 操作指引.....3-7. 8-10

English Operation Instructions.....3-7. 11-13

VA80089 Rev. 2012(11-12)

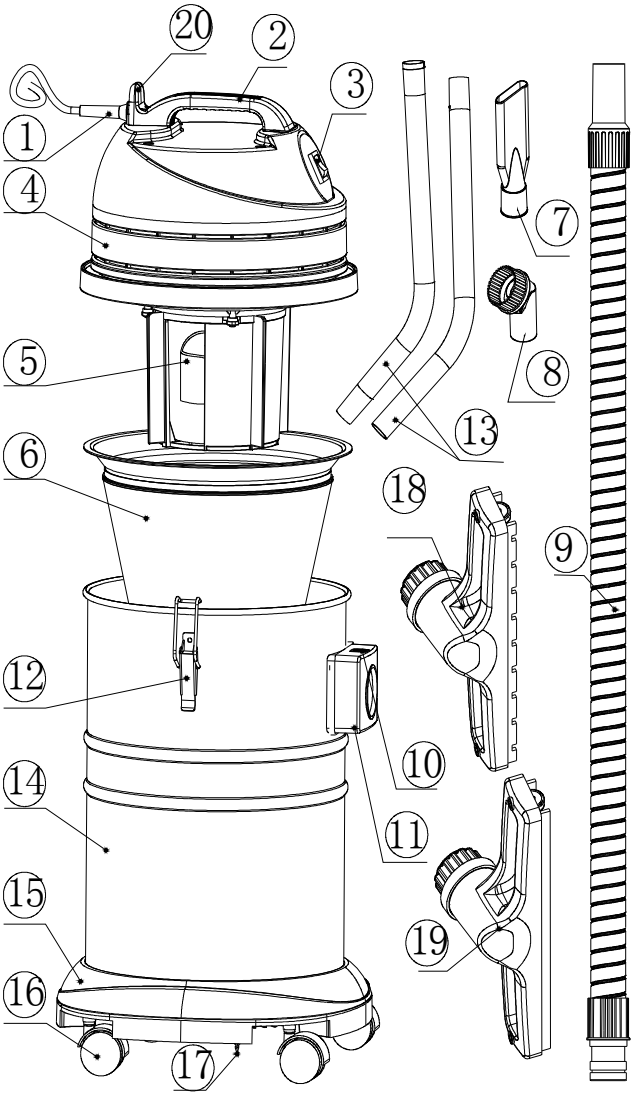

F1

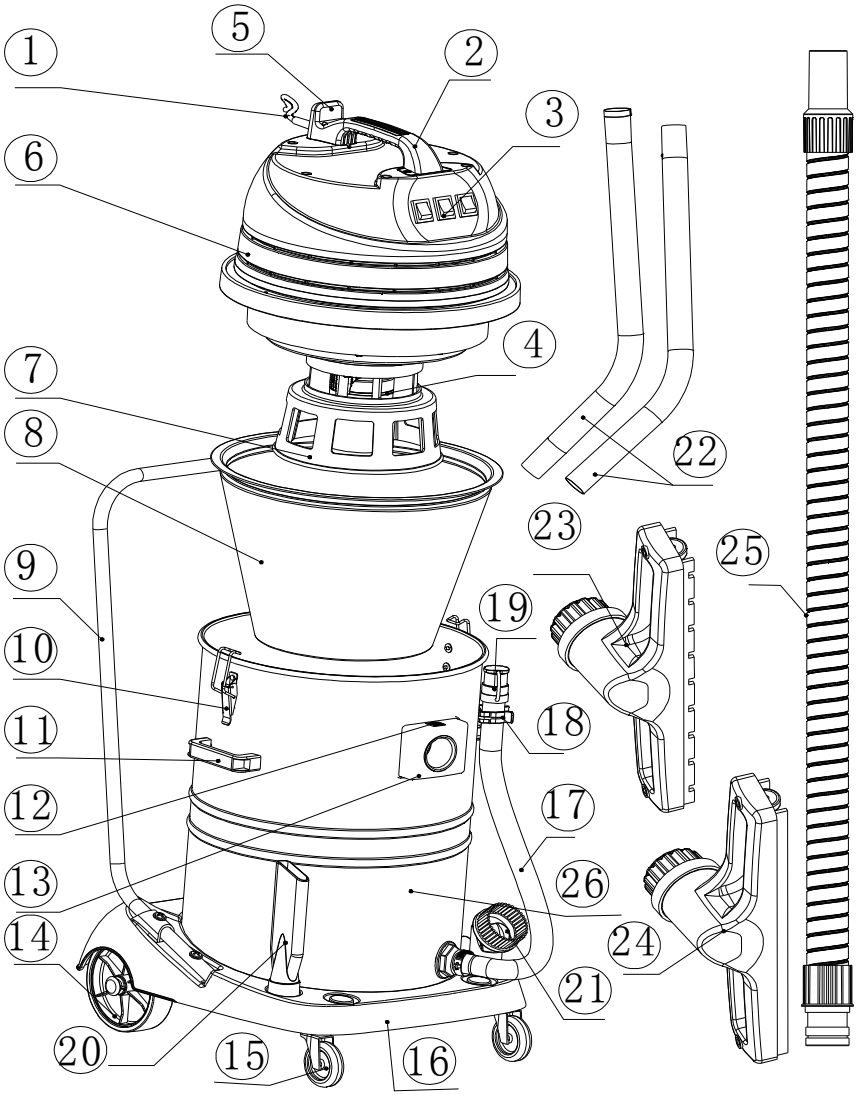

F 2

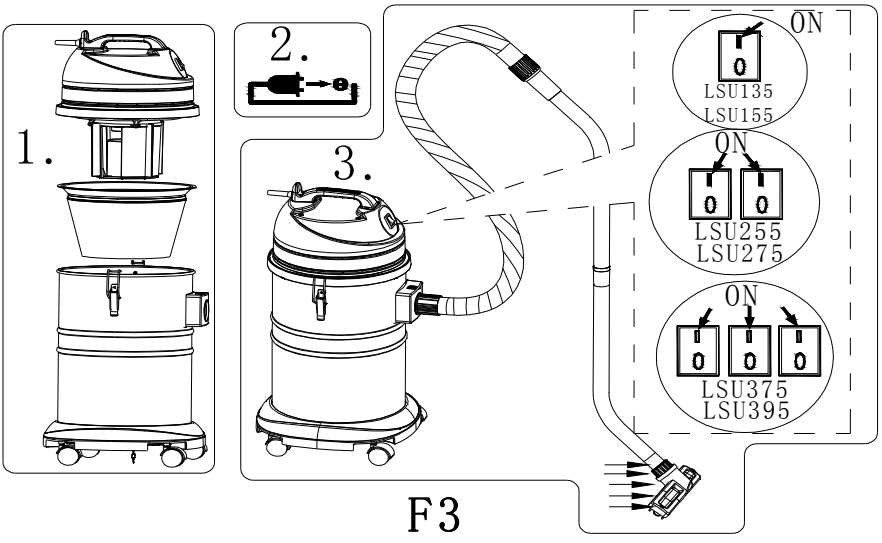
1.
2.
3.
ON
LSU135
LSU155
ON
LSU255
LSU275
ON
LSU375
LSU395

F3

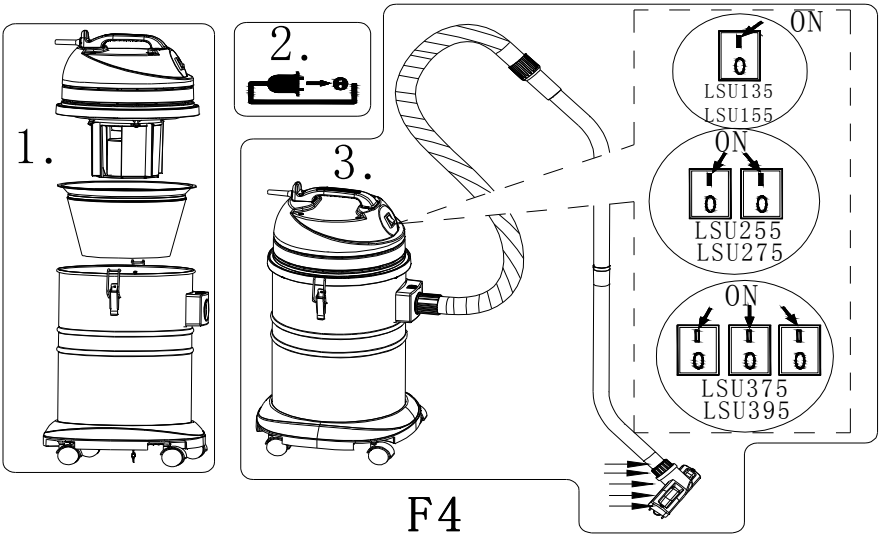
1.
2.
3.
ON
LSU135
LSU155
ON
LSU255
LSU275
ON
LSU375
LSU395

F4

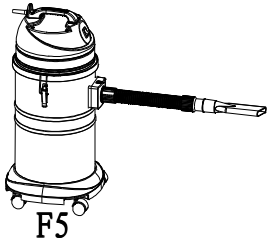

F5

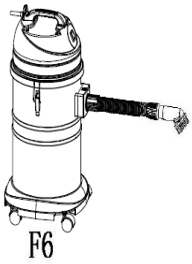

F6

LSU135 & LSU155线 路 图(图7 / Figure7)

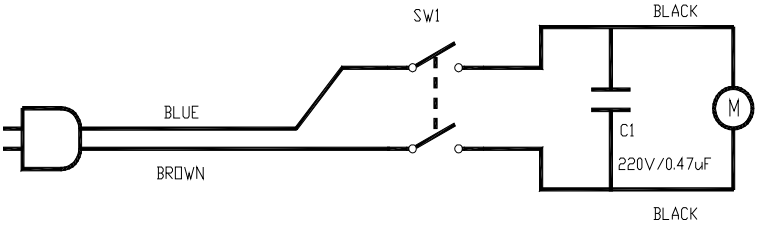

LSU255 & LSU275线路图(图8/Figure 8)

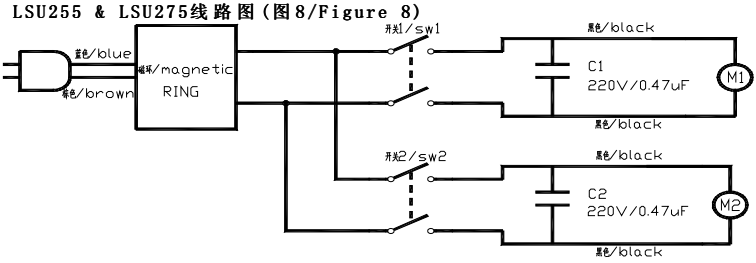

LSU375 & LSU395 线 路 图(图9 / Figure 9)

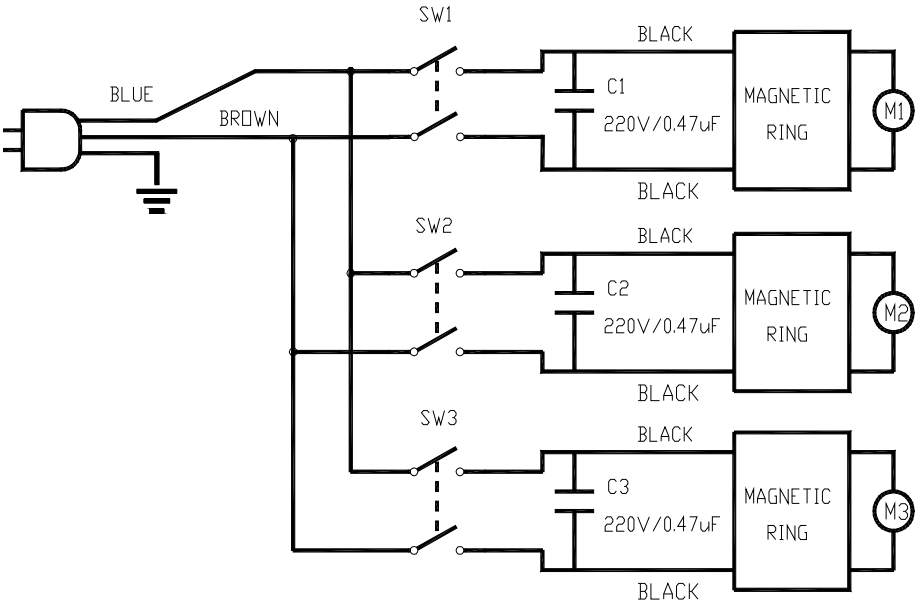

Product Specification Parameter/规格参数 (表 1/Form 1)

Model No.	Capacity (L)	Voltage (V)	Frequency (Hz)	Power(W)	Vacuum (mmH2O)	Air Flow (ltr/min)	Noise (dBA)
LSU135	35	220~240V	50/60	1000	1840	1869	74
LSU155	55	220~240V	50/60	1000	1923	2152	74
LSU255	55	220~240V	50/60	2000	2005	3115	78
LSU275	75	220~240V	50/60	2000	2005	3115	78
LSU375	75	220~240V	50/60	3000	2020	3540	79
LSU295	95	220~240	50/60	2000	2005	3115	78
LSU395	95	220~240V	50/60	3000	2020	3540	79

介绍：

此说明书用于了解威霸及掌握干湿两用吸尘器的操作。

在操作使用前，应通读本说明书。

此机器是做干湿两用吸水吸尘机，属于商用吸尘器。

机器结构描述

- **LSU135 结构名称描述，部件图参考第三页"F1"图.**

1. 电源线 2. 机头手柄 3. 电源开关 4. 机头总成 5. 浮杯 6. 吸尘过滤器 7. 长耙 8. 尘扫 9. 吸尘软管 10. 吸管座按扭 11. 吸管座 12. 水桶搭扣 13. 延长钢管 14. 不锈钢桶 15. 桶底座 16. 万向轮 17. 静电接地链 18. 吸尘耙 19. 吸水耙 20. 电源线放置挂勾

- **LSU155/LSU255/LSU275/LSU375/LSU395 结构名称描述，部件图参考第四页"F2"图.**

1. 电源线 2. 机头手柄 3. 电源开关 4. 浮杯 5. 电源线放置挂勾 6. 机头总成 7. 浮杯架 8. 吸尘过滤器 9. 底座扶手 10. 水桶搭扣 11. 桶身把手 12. 吸管座按扭 13. 吸管座 14. 后大轮 15. 万向轮 16. 水桶底座 17. 放污管 18. 污水管夹 19. 污水管堵头 20. 长耙 21. 尘扫 22. 延长钢管 23. 吸尘耙 24. 吸水耙 25. 吸尘软管 26. 不锈钢桶

操作说明

吸尘：吸尘时，应确保桶内无污水，尘袋和尘隔干燥洁净，吸尘时用带毛条的干式吸尘耙。

为保证良好过滤效果，请使用尘隔过滤器 ，每次使用前应确保桶内无污水, 尘隔和 尘袋干燥，洁净。

使用时若发生吸力下降应清理机器。此时应关闭红色电源开关，拔下电源插头，水桶搭扣，取下吸尘机机头部分，方可清理尘隔。为防止灰尘泄漏，不可拆卸吸尘机软管，不可将尘隔取出，此时轻轻拍打吸尘过滤器，待灰尘沉积于桶内后，方可将尘隔过滤器取出，再将桶清理干净，倒净尘袋内的灰尘。如灰尘过滤器污渍严重，可用水冲洗表面或者用水轻轻揉搓附着的灰尘（清洗干净后，再晒干使用）再装好机头，锁紧水桶搭扣，插上电源插头，按下红色电源开关，便可继续使用。若吸尘机吸力仍然较低，请检查吸尘机软管是否有阻塞的现象。**（吸尘控制和操作图片参考第五页“F3”图）**

当吸尘耙很难到达和吸尘的地方，如间隙，空间比较狭小的地方等，应更换使用长耙**（操作图片参考第六页“F5”图）**

当需要清洁窗帘及床单沙发时，考虑更换使用尘扫**（操作图片参考第六页“F6”图）**

吸水：吸水时必须使用带橡胶条的吸水耙。

干湿两用吸尘吸水机在作吸水使用时，应确保桶内无灰尘。

使用时应取出尘袋和尘隔过滤器，将桶内清理干净，装上机头，锁紧水桶搭扣，插上电源，取下吸管上吸尘用的干式吸尘耙，再换上吸水用，带橡胶水刮的专用吸水耙，按下红色开开关便可。如果在吸水过程中,有许多泡沫需要吸收,建议使用尘隔过滤器来吸水以免泡沫进入机头(控制和操作图片参考第五页“F4”图)

水满时，浮杯会上浮并堵住机头进气口，此时，机器无法正常吸水(吸力基本为零)，且噪声突然变大，应关闭电源开关，将机器推到下水管排水处，打开污水管将桶内污水排出干净。

保修条例

威霸系列工业吸尘吸水机产品在使用半年之内（自购买发票之日起计算），如发生非人为因素引起的故障，经我司检验属实，可免费修理或更换零部件（易损件除外），但以下情况不属保修范围：

1、 不正确操作造成产品损坏；
2、 自行拆卸更改产品及人为损坏；
3、 产品外观人为损坏变形。

若发生产品质量及操作问题，请及时与我公司分销点售点服务部联系。

维护与保养

⚠ 注意：保养、维护本机时，必须拔除电源线插头

4、 确保电源线无损伤或损坏。
5、 使用完毕，清理整机，确保桶内无污水，污物或灰尘。
6、 使用完毕，应用力拍打或用毛刷清理、清洁尘袋、灰尘过滤器。
7、 尘袋，灰尘过滤器清洗干净之后，再次使用前必须彻底干燥。
8、 电机碳刷因过度使用而磨损，应进行更换。
9、 使用时必须确保使用电压与机器铭牌标识相符。
10、 如果电源线损坏，为避免危险，必须联系售后服务部进行更换。

警告

使用电器设备任何时候都应注意安全，为确保设备安全运行，应对设备进行必要的定期维护与保养。

疏于维护与保养、未及时更换失效的零件而导致的任何安全事故本公司概不负责。

▶如下物质切勿使用本吸尘机

有害粉尘、灼热物质（譬如：燃烧的烟头，热灰等，易燃易爆的液体（石油，溶剂，酸碱等腐蚀液体），易燃易爆的粉尘（譬如：镁或者铝粉等）

电源线

⚠若外接插座与本机电源线附带的插头不配，必须剪掉本机附带的插头并安装合适的插头，电源线内电线的色标与下列规则相符：

蓝色电线 ————————————中性线（零线）

棕色电线 ————————————火线

蓝色线与标示为“N”的端子连接,棕色线与标示为“L”的端子连接机器、

零件或配件若有更改，恕不另行通知。

电路连接图:

电路连接图参考第五页和第六页“Figure7/Figure8/Figure9“。

产品规格参数

规格参数表参考第六页”Form1”.

INTRODUCTION

This manual will help you get the most from VIPER wet & dry vacuum cleaner.

Read it thoroughly before operating the machine.

This is a wet and dry vacuum cleaner machine,used for water suction and dust suction on the floor.It is recommended for commercial use.

MACHINE STRUCTURE DESCRIPTION

LSU135 Structure Description（Refer to page Three"F1"）

1.Power Cord 2.Machine Head Handle 3.Power Switch 4.Machine Head Assembly 5.Float Cup 6.Absorbing Dirt Filter Assembly 7.Crevice Tool 8.Dusting Tool 9.Soft Absorbing Tube 10.Absorb Tube Base Pressing Button 11.Absorb Tube Base 12.Tank Catch 13.Extension Iron Tube 14.Tank 15.Tank Bottom Base 16.Caster 17.Ground Chain 18.Dry Pick-up Tool 19.Wet Pick-up Tool 20.Power Cord Storage Hanger

LSU155/LSU255/LSU275/LSU375/LSU395 (Refer to page Four"F2"）

1.Power Cord 2.Machine Head Handle 3.Power Switch 4. Foam Guard 5.Power Cord Storage Hanger 6.Machine Head Assembly 7.Float Cup Bracket 8.Absorbing Dust Filter Assembly 9.Bottom Base Handle 10.Tank Catch 11.Tank Handle Lift 12.Absorb Tube Press Button13.Absorb Tube Base 14.Rear Wheel 15.Caster 16.Tank Bottom Base 17.Drain Hose 18.Drain Hose Clamp 19.Drain Hose Block Head 20.Crevice Tool 21.Dusting Tool 22.Extension Iron Tube 23.Dry Pick-up Tool24.Wet Pick-up Tool 25. Soft Absorb Tube 26. Tank

Operation Instructions

Dry Operation

The use of absorbing dirt filter assembly must be used. Always ensure that the container is emptied of any liquid before using for dry pick-up and that the cloth filter is in a clean and dry condition.

When the machine suction force is reducing or machine noise is becoming bigger. Switch off the machine and remove the power cord plug, loosen tank catch of tank's sides, take down machine head assembly. Shake and clean the absorbing filter assembly .This should be done while the hose is still connected to avoid dust exiting from the open dirt container connection. Having shaken the filter, allow a few moments for the dust to settle. Remove absorbing dust

filter assembly from machine and empty container. If the filter's surface appears to be heavily contaminated it is advisable to brush the filter material clean with an ordinary soft household brush. This ensures continued peak performance. Having emptied container, replace absorbing dust filter assembly, placed machine head assembly and lock tank catch. You are now ready to start again. If the above ways can't resolve the lower suction, please check if soft hose has blocking

(Dry Control and Operation can be referred Page Five"F3")

Use crevice tool to operate if dry pick-up tool is difficult to reach and operate , eg.gap(Control and Operation can be referred Page Six"F5")

Use Dusting tooling if clean curtain (Control and Operation can be referred Page Six"F6")

Wet Operation

Assure to empty any dry dust before using the machine for wet pick-up.

Always be sure to use wet pick-up tool with rubber blades.

If there is much water bubble to absorb, suggest to use Absorbing Dirt Filter Assembly for wet pick-up, which will prevent water bubble into machine head. (Wet Control and Operation can be referred Page Five"F4")

When the machine water is maximun or tank is full, machine has no suction and noise become bigger, Switch off the power cord. Remove the power head and float valve assembly.

Pull the machine to sewer and empty the liquid from the container.

MAINTENANCE

Machine can provide free of repairing and replacing parts if purchasing time is within half a year and non-fault beyond control.

If have product quality problem, please contact the nearest authorized service center.

Viper don't consider free of repairing and replacing parts if the below cause:

Improper operation make machine be fault.

Replace parts and cause fault by sabotage.

Machine structure is damaged by sabotage.

Attention!!! Before performing any cleaning and maintenance on

the vacuum cleaner, always disconnect the plug from the source of electricity.

Make sure that the cable is not cut or damaged.

Clean the tank, do not let it stand for a long time with dust or dirty water.

The cloth dust bag can be washed and must be dried again before re-use

The motor is built for maintenance-free operation and does not need any particular service. The carbon brushes may need to be replaced due to normal wear and tear caused by using the vacuum cleaner over time, and they can be replaced only by our **authorized service centers.**

WARNING

As with all electrical equipment care and attention must be exercised at all times during its use, in addition to ensuring that routing and preventative maintenance is carried out periodically in order to ensure its safe operation.

Failure to carry out maintenance as necessary, including the replacement of parts to the correct standard could render this equipment unsafe and he manufacturer can accept no responsibility or liability in this respect.

WARNING

The following material must not be picked up by the vacuum cleaner:

hazardous dust, hot materials(burning cigarettes, hot ash ,etc.), flammable,
explosive, aggressive liquids(e.g. Petrol, solvents, acids, alkalis ,etc.), flammable explosive dust(e.g. magnesium or aluminum dust, etc.)

IMPORTANT： If the socket outlets are not suitable for the plug

supplied with the appliance. It should be cut off and an appropriate plug fitted. The wires in this main lead are colored in accordance with the following code.

Blue-Neutral Brown-Live.

As the colors of the wires in the mains lead of this appliance may not correspond with the colored markings identifying the terminals of the plug proceed as follows. The wire, which is colored blue, must be connected to the terminal, which is marked which the letter N or colored black. The Wire, which is colored brown, must be connected to the terminal, which is marked with the letter L or colored red.

The manufacturer reserves the right to modify the machine and the included accessories without prior notice.

Wiring diagram refer to page6 and page7”Figure7/figure8/Figure9.

Product Specification Parameter

Product Specification can be referred to Page 7 “Form1”.

Carried Standard: QB1562-1992

VIPER INDUSTRIAL PRODUCTS
P.O.BOX 104 HAMILTON, MI 49419
(866) 418-4737
(866) 41-VIPER

VIPER CLEANING EQUIPMENT CO.,LTD
LIANG BIAN, LIAO BU, DONG GUAN,
GUANG DONG, CHINA
TEL：(0769) 83283988
FAX：(0769) 83280104