Document No.:KE-2021-00

KITZ

Operation Manual

For

PN10EJ TYPE BUTTERFLY VALVE

Thank you for having chosen KITZ products.
For safe and trouble-free function and performance of the product, make sure to read and understand all items of this manual before valve mounting and operation.
Keep this manual in a convenient place for your valve operators' easy access.

ADDRESS: 1-10-1 NAKASE MIHAMA-KU, CHIBA, JAPAN
PHONE: 043-299-0111
HOMEPAGE: www.kitz.co.jp

KITZ CORPORATION

Document No.:KE-2021-00

This manual applies to the KITZ manual PN10EJ type butterfly valve of wafer and lug type.

For actuators of automatically operated valve, refer to the operation manual of relevant actuators prepared by the manufacturers.

CAUTION AND WARNING

To ensure safe and trouble-free function and performance of the product, please read all items of this manual before handling, mounting and operation of the units.
The items listed here are indicated to prevent personal injury and product damage.

Please follow the cautions described here.

The signal words "WARNING" and "CAUTION" are defined as follows:

⚠ WARNING	Indicates an imminently hazardous situation which, if not avoided, will result in death or serious injury.
⚠ CAUTION	Indicates a potentially hazardous situation which, if not avoided, could result in minor or moderate injury and product damage.



Indicates mandatory implementation of an action.



Indicates prohibition of an action.

NOTES TO USERS

This manual is designed to show an appropriate usage of products for transportation, storage, installation, operation and maintenance.
Be sure to read the manual before starting any of transportation, storage, installation, operation, maintenance, and handling valves. Also be sure to read the operation manual (No. D33-V) enclosed with the product in the package.
This manual does not cover the whole scope of conceivable usage of products for transportation, storage, installation, operation and maintenance. If technical assistance beyond the scope of this manual is required, contact KITZ Corporation or its distributors.
The specifications for transportation, storage, installation, operation and maintenance described in this manual have been determined with valve maintenance taken into consideration. DO NOT use products beyond the specifications.

The illustrations given in this manual do not introduce all details. If more detailed data are required, refer to our relevant valve assembly drawings.

* Any information provided in this operation manual is subject to revision at without prior notice. This edition cancels all previous issues.

Document No.:KE-2021-00

CONTENTS

		Sheet
Ⅰ	Construction and Design Features	1
Ⅱ	Transportation and Storage of Valves	8
Ⅲ	Valve Installation	10
Ⅳ	Operation and Maintenance	15
Ⅴ	Periodic Inspection	21
Ⅵ	Disassembly and Reassembly of Valves	24

CHAPTER Ⅰ

Construction and Design Features

Ⅰ Construction and Design Features

PN10EJ Butterfly Valves

1. Construction and Function

1.1 The valve design and the name of the parts are shown below.

1.2 90° rotation of the stem opens and closes the valve.

1.3 Butterfly valve is serviceable in fully open, closed and intermediate position for flow control.

1.4 EJ type butterfly valve has center drive mechanism.

1.5 The bi-directional flow is available for butterfly valve.

Valve Size 50 to 200mm

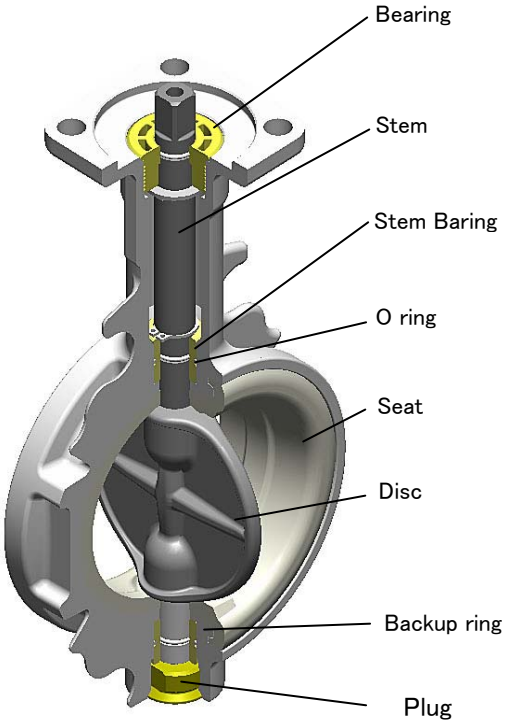

Valve Size 250 to 300mm

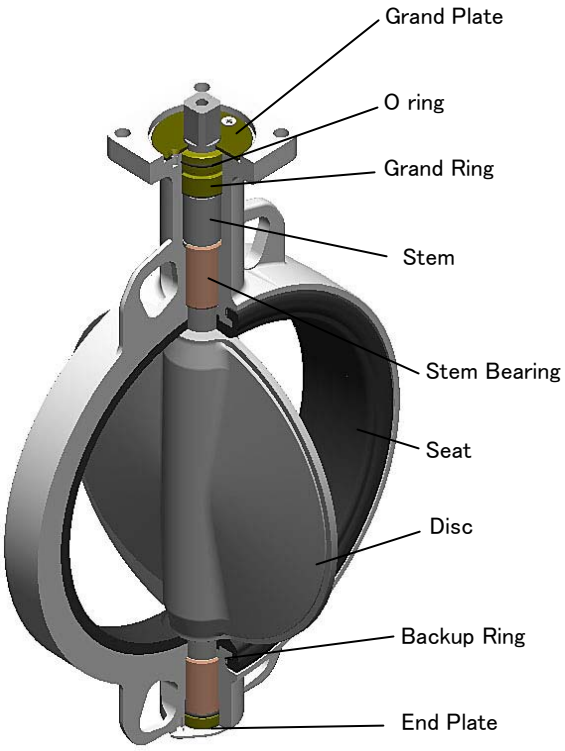

This drawing shows a typical construction of valve.

Ⅰ Construction and Design Features

2. General Feature

2.1 Face to face dimension should comply with EN 558 Basic series 20.

2.2 Actuator mounting flange should comply with ISO 5211 except outside diameter.

2.3 Lower operating torque ensure operability and durability of the valves.

2.4 Stem is designed to be blow-out proof.

2.5 Double seals are applied at the stem to prevent external leakage.

2.6 The valve has the longneck design for easier installation of 50mm insulation.

2.7 Lug type butterfly valves are available to use the pipe end service on following conditions.

a) Non-shock water
b) Lever or gear operated type (not automatic operated type)
c) Maximum pressure; Full working pressure of the valve
d) To be locked on full closed position
e) Within 4 days *1
*1 It is recommended to use the blank flange for long period of time beyond 4 days.

If the valve is used beyond of these conditions, it may cause the external leakage.

The PED applicable products (CE marking bearing products) are not available to use the pipe end service

Ⅰ Construction and Design Features

3. Valve Specification and Pressure-Temperature Rating

3.1. Valve Specification

3.1.1 Maximum service pressure:

PN 10 ····· 1.0MPa (10bar)

3.1.2 Service temperature range:

W-NBR seat ·····from 0℃ (*) to +80℃

VMQ seat ····· from −20℃ (*) to +180℃

FKM seat ·····from 0℃ (*) to +130℃

(Refer to P-T chart for more details)

* Media should not be frozen.

3.1.3 Shell test pressure

PN 10 ····· 1.5 MPa (15bar)

3.1.4 Seat test pressure

PN 10 ····· 1.1 MPa (11bar)

3.2. Pressure-Temperature Rating

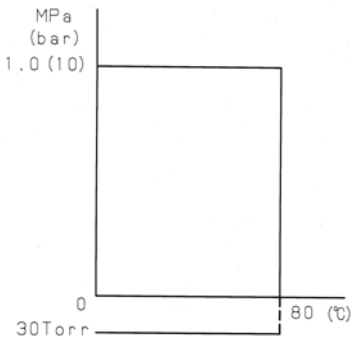

W-NBR seat

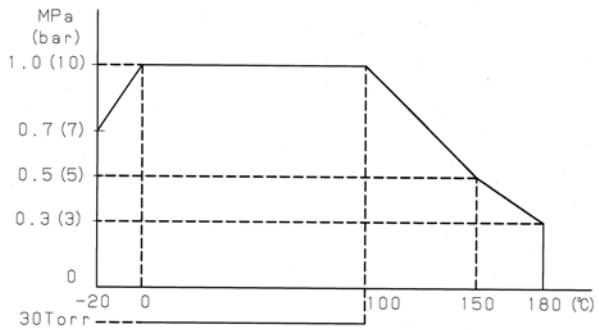

VMQ seat

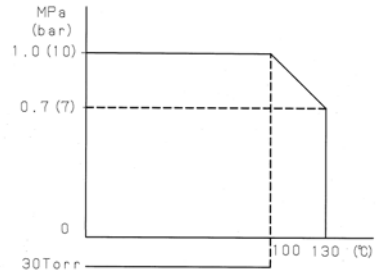

FKM seat

Note: Valves should not be used exceeding the P-T Rating.

Contact KITZ or its authorized distributors beforehand for advice in case of vacuum service

The lowest service temperature is −10℃ for PED applicable products (CE marking bearing products).

Ⅰ Construction and Design Features

4. Minimum Inside diameter of Applicable Pipes

Never apply the pipes with smaller inside diameter than the figures shown in the following table. That will cause contact of the valve disc with the pipe ends.

Valve nominal size		Pipe inside diameter (mm)
DN	NPS	
50	2	32
65	2-1/2	52
80	3	75
100	4	92
125	5	118
150	6	145
200	8	195
250	10	244
300	12	292

5 Size and Number of Mounting Bolt and Nut

Hexagonal Bolt and Nut (L=mm)

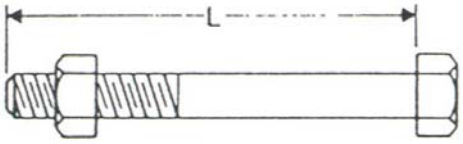

Flange : PN10 (Steel/Ductile Iron)			
DN	Bolt Size	Length(L)	No.
50	M16	105	4
65	M16	105	4
80	M16	105	8
100	M16	115	8
125	M16	115	8
150	M20	120	8
200	M20	130	8
250	M20	140	12
300	M20	155	12

Ⅰ Construction and Design Features

Both threaded bolt and nut (L=mm)

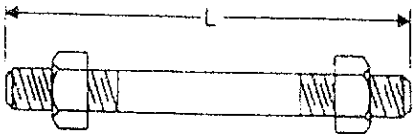

Flange : PN10 (Steel/Ductile Iron)			
DN	Bolt Size	Length(L)	No.
50	M16	125	4
65	M16	130	4
80	M16	130	8
100	M16	135	8
125	M16	140	8
150	M20	145	8
200	M20	155	8
250	M20	170	12
300	M20	185	12

Ⅰ Construction and Design Features

6. Chemical Resistance Guide

MATERIAL / FLUID	DISC				SEAT			
	AL-BRZ	DUCTILE	304	316	NBR W-NBR	EPDM HT-EPDM	FKM	VMQ
Acetic acid (10%)	×	△	◎	◎	×	○	×	◎
Air	◎	◎	◎	◎	◎	◎	◎	◎
Ammonia(anhydrous liquid)	×	○	◎	◎	△	○	×	△
Ammonia(solution)	×	○	◎	◎	○	○	×	–
Ammonium Sulfate	×	△	○	○	◎	◎	○	–
Animal Oil	○	◎	◎	◎	◎	○	○	–
Calcium Carbonate	×	×	○	○	◎	◎	◎	–
Carbonic Acid	–	×	○	○	○	○	◎	×
Chlorinated Water	×	–	–	△	○	–	◎	–
Ethane	–	○	○	○	◎	×	◎	×
Ethyl Alcohol	○	○	◎	◎	○	◎	○	◎
Freon 12	◎	○	–	◎	○	◎	△	×
Gasoline(refined/unleaded)	○	○	◎	◎	△	×	◎	×
Hydrochloric Acid	×	×	×	×	△	○	◎	–
Hydrogen Gas(cold)	◎	○	◎	◎	○	○	◎	–
Lubricating Oil(petroleum base)	○	◎	◎	◎	◎	×	◎	×
Methyl Alcohol	◎	○	◎	◎	○	◎	△	◎
Mineral Oil	○	○	◎	◎	◎	×	◎	○
Natural Gas	◎	◎	◎	◎	○	×	◎	◎
Oxygen(cold)	◎	○	◎	◎	○	○	◎	◎
Petroleum Oil(refined)	○	–	◎	◎	○	×	○	–
Propane Gas	–	○	○	◎	◎	×	◎	×
Sea Water	◎	×	○	○	◎	◎	◎	–
Soybean Oil	–	△	◎	◎	◎	△	◎	◎
Sulfuric Acid (7%)	×	×	△	○	○	○	◎	×
Sulfuric Acid (20%)	×	×	×	×	×	○	◎	×
Sulfurous Acid	×	×	○	○	△	△	◎	×
Steam(100℃)	◎	◎	◎	◎	×	○	△	–
Vegetable Oil	○	△	◎	◎	◎	△	◎	◎
Water(hot,150° F)	◎	△	◎	◎	×	○	◎	◎

◎ : Excellent ○: Good △: Poor ×: Very Poor –: Please Contact us

When fluid be used not listed here, contact us beforehand for advice.

Properties/applications shown are typical. Your specific application should not be undertaken without independent study and evaluation for suitability. While the utmost care has been used in compiling this date, We assume no responsibility for errors.

CHAPTER Ⅱ

Transportation and Storage of Valves

Ⅱ Transportation and Storage of Valves

Warnings and Cautions for Transportation and Storage

⚠ WARNING

① When moving a valve with a crane or other lifting devices, firmly hold the valve with a belt, paying an attention not to damage the valve stem and operator. Keep off the valve lifting area to protect injuries caused by unsecured valves.

①

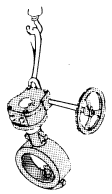

⚠ CAUTION

② Don't drop valves on the ground. Don't place other objects on top of valves, or don't step on them. Overloading may damage valves, or cause injury to those handling valves.

③ Don't stack valves high. Unstable stacking could result in damage to valves, or injury to those handling valves.

④ Don't leave valves uncrated. Take an appropriate measure to prevent intrusion of foreign objects into valves which may cause damage to valve internals during operation.

⑤ Don't place valves where they are directly exposed to dust, rain or sunlight.

⑥ Don't store valves in the corrosive environment, which may cause corrosion on threaded portions of valves.

②

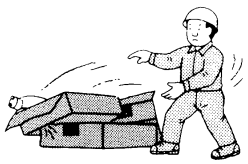

③

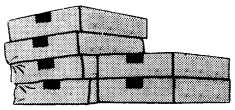

④

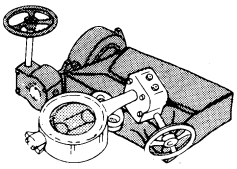

⑦ Store crated valves indoors in a dry and well ventilated place. Maximum humidity of 75% and maximum temperature of 60℃ are recommended.

⑧ For long term storage, leave the valve disc open approximately by 10° to prevent rubber liners from permanent deformation.

⑨ High humidity may deteriorate quality of carton cases used to pack valves. Care should be taken when handle such deteriorated carton cases.

⑩ Take care not to damage the valve painting surfaces during transportation, which may subsequently cause corrosion and get the valve rusty. Touch-up the damaged surfaces adequately.

⑧

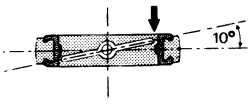

⑨

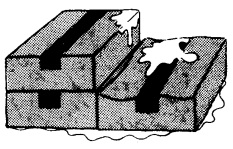

CHAPTER Ⅲ

Valve Installation

Ⅲ Valve Installation

1. Warnings and Cautions for Preparation of Valve installation

⚠ WARNING	
❗	① Check the valve specifications with the identification plate or tag and the relevant product catalog, to ensure that the exact valves specified in your piping arrangement plan are provided. The service fluid, pressure and temperature determine the compatibility of trim and sealing materials. Incorrect application of a specific valve could be hazardous.

⚠ CAUTION		
🚫	② Before mounting valves, ensure to weld flanges to pipes first, and wait until the welded areas have cooled down to an ambient temperature. It may cause a damage to rubber liners that flanges are first jointed with valves and then welded to pipes.	② 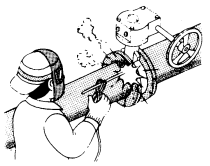
❗	③ Clean flanges with a synthetic detergent to make them rust-free. Also ensure that EPDM liners of valves are oil-free. ④ Flange faces are required to be free from scratches, distortion or unevenness. ⑤ Edges of flange welded areas shall be thoroughly chamfered to protect rubber liners of valves. ⑥ Prior to valve mounting, clean the pipe bores to remove rusts, dusts, scales, welding spatters and other foreign objects which may affect valve sealing performance.	③ 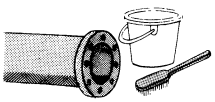 ④ 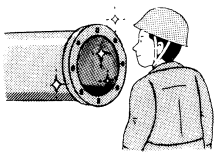 ⑤ 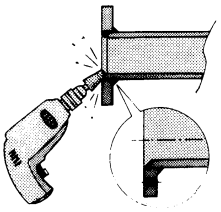

Ⅲ Valve Installation

2. Warnings and Cautions for Valve installation Position and Location.

⚠ CAUTION		
⃠	① A butterfly valve is provided with a disc shaped closure member, which is supported with a stem assembled in its core during opening and closing operation. This design, therefore, needs care for valve mounting position and location, to minimize an influence of the change of fluid velocity and line pressure.	③ 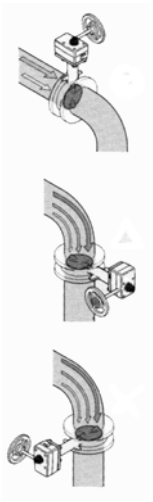
❗	② Ensure not to mount butterfly valves on the downstream side of elbows, reducers or control valves, where a considerable change of fluid velocity takes place. Should it be, however, found inevitable, ensure that valves shall be mounted 10 times as long as their nominal diameters apart. ③ Where the piping system turns, ensure to mount valves as illustrated here. ④ At the outlet of a pumping system, ensure to mount valves as illustrated here. ⑤ Take proper actions to prevent danger when valves are installed where the following conditions exist: (a). Questioned durability of valve materials against snow load or wind freezing. (b). Mechanical or electrical damage caused by flood. (c). Valve operation failure or wear caused by dust. (d). Material deterioration caused by radiation. (e). Electrical corrosion. (f). Bacterial corrosion. (g) Accelerated load when valves are installed on mobile equipment or apparatus to affect mechanical strength of valves. ⑥ Our valves are designed and constructed to have sufficient strength fro underground service. However, besides operation and maintenance difficulty, electric or galvanic corrosion and bacterial corrosion are inherent problems. Sufficient and adequate care must be taken beforehand to inhibit or prevent such type corrosions occurring on this kind of installation..	④ 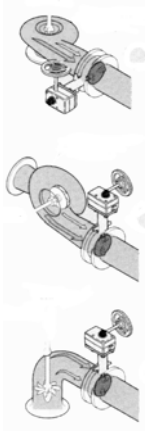

Ⅲ Valve Installation

3. Warnings and Cautions for Valve installation

⚠ CAUTION		
	① Don't use gaskets between valves and flanges. ② Don't directly joint butterfly valves with check valves or pumps, which may contact valve discs during service and damage them. ③ In case of valves larger than ND350, ensure that valve operators shall not be positioned downwards as illustrated here. This may cause an external fluid leakage.	① 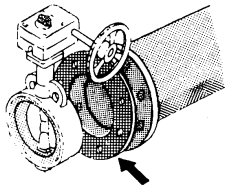 ② 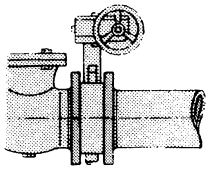 ③ 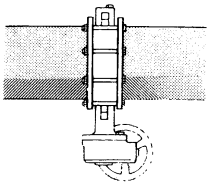
	④ Ensure that each couple of pipe flanges are parallel without slippage or inclination as illustrated here. ⑤ Support the upstream and downstream pipes and make a correct centering. Incorrect centering of pipes is a major cause for an external fluid leakage through piping connection areas. ⑥ Try not to install valves in the places where valve functions may be hampered by outer forces such as vibrations. ⑦ Keep the firm footing for valve installation and operation. ⑧ Use supports for firmly holding pipes if needed to avoid excessive load caused by valve mass or valve operation. ⑨ Prepare sufficient room and lighting for valve installation and operation, considering the valve height and the stem direction. ⑩ Safety measures shall be sufficiently taken for foreign object in fluid, which may cause seat damage and external leakage. ⑪ Customers shall be contact KITZ or its authorized distributors beforehand for deepwater service, advising all details of your technical requirements. ⑫ Customers shall be contact KITZ or its authorized distributors beforehand for automatic act function and system service, advising all details of your technical requirements.	④⑤ 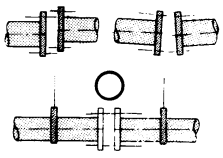

Ⅲ Valve Installation

4. Valve Installation Procedure

4.1 Set jack bolts under the pipes for flat support at the same height, and adjust the flange-to-flange distance so that some 6mm to 10mm room may be allowed beside the both sides of the valve body.

4.1

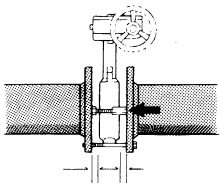

4.2 Ensure to leave the valve disc left open by 10° from the full closed position, when the valve is mounted on or dismantled from pipes.

4.3 Mount the valve carefully so that flange faces may not damage rubber liners and temporarily set a couple of boltings into lower bolt holes of two pipe flanges

4.3

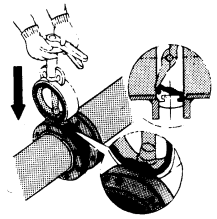

4.4 Then, set another couple of boltings into higher bolt holes of two flanges, make correct centering between pipes and the valve, and align them by temporary tightening of boltings.

4.5 Trially open the valve to check if there is no disturbing contact between the valve disc and the flanges.

4.5

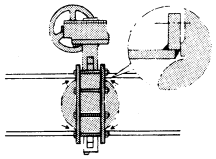

4.6 Remove the jack bolts, set all boltings around the valve body and tighten them alternately and diagonally till the flanges contact the valve body.

4.6

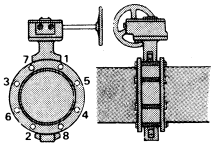

CHAPTER Ⅳ

Operation and Maintenance

Ⅳ Operation and Maintenance

1. Warnings and Cautions for Operation and Maintenance

⚠ WARNING

① When valves need to be dismantled, ensure to thoroughly relieve the line pressure beforehand. Loosening piping bolts under the line pressure causes a danger. Any residual fluid left inside the pipeline must be completely drained to prevent an injury caused to those handling valves.

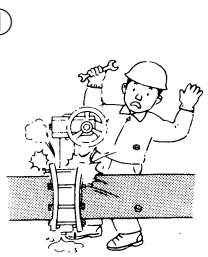

② Safety measures shall be sufficiently taken when valves used for toxic or explosive fluid service are dismantled or disassembled. Also safety measures shall be taken to store or dispose valves used for toxic or explosive fluid service. They need to be isolated not to allow any access by strangers.

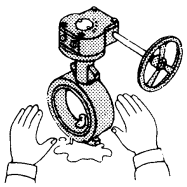

③ Handling pneumatically or electrically actuated valves needs a careful study and implementation of the contents of operation and maintenance manuals provided, prior to any action to be taken.

④ Safety measures shall be sufficiently taken for external fire, which may damage the function of valve sealing.

⑤ Safety measures shall be sufficiently taken for surface temperature in case of high fluid temperature.

⑥ The maximum flow velocity (m/s) shall be according to EN593 as follows:

PS (bar)	Flow Velocity	
	Liquid fluids	Gaseous fluids
10	3	30
16	4	35
25	5	40

Ⅳ Operation and Maintenance

⚠ CAUTION

⑦ Ensure to fully open valves when the piping systems are subjected to a loop test or leak detection with the test pressure higher than the nominal pressure of valves. Butterfly valves are not designed to play a role of gate valves. Application of high pressure to fully closed butterfly valves may damage rubber liners.

⑦

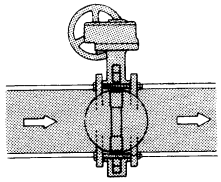

⑧ Valves equipped with manual operators such as levers, handwheels or gears must be only manually operated. Application of an excessive external force to operate valves may result in malfunction of valves and their operating devices.

⑧

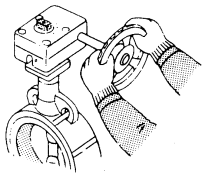

⑨ When a gear operator is provided with a locking device. Ensure to unlock the device by loosening a butterfly boft (Part No.132) before gear operation. If you have set a valve operating position for repeated use in the future. fix such a position with the locking device by tightening the butterfly bolt.

⑨

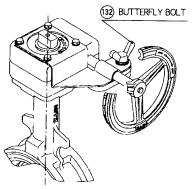

⑩ Don't manipulate the stopper bolts provided to gear operators. Incorrectly aligned valve operating positions may cause internal fluid leakage.

⑩

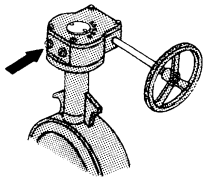

⑪ Throttling service with the disc opened by 30° or narrower may cause cavitation in the downstream pipe, resulting in vibration of the piping system and noise emission. Users are recommended to contact KITZ Corporation for technical advice when valves are used for throttling service.

⑫ Users are also recommended to carry out periodic inspections to check at least the following:

- To check the valve operating position.
- To check loosened boltings and consequent external fluid leakage.
- To check vibration and noise emission of piping system.

⑪

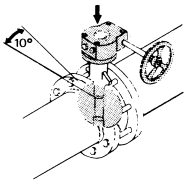

⑫

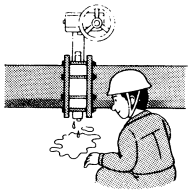

⑬ Wear the protective items such as goggle, gloves, and safety shoes.

⑭ Before dismantling valves from the pipe, mark the valve body and coupled pipe flanges with their original position. Reinstall the valve on pipelines according to the marks after reassembly.

Ⅳ Operation and Maintenance

2. Valve Operation

2.1 Lever Handle Type

2.1.1 The lever handle is directly mounted on the valve.

2.1.2 Turning the lever handle 90° clockwise will close the valve, and turning the lever handle 90° counterclockwise will open the valve.

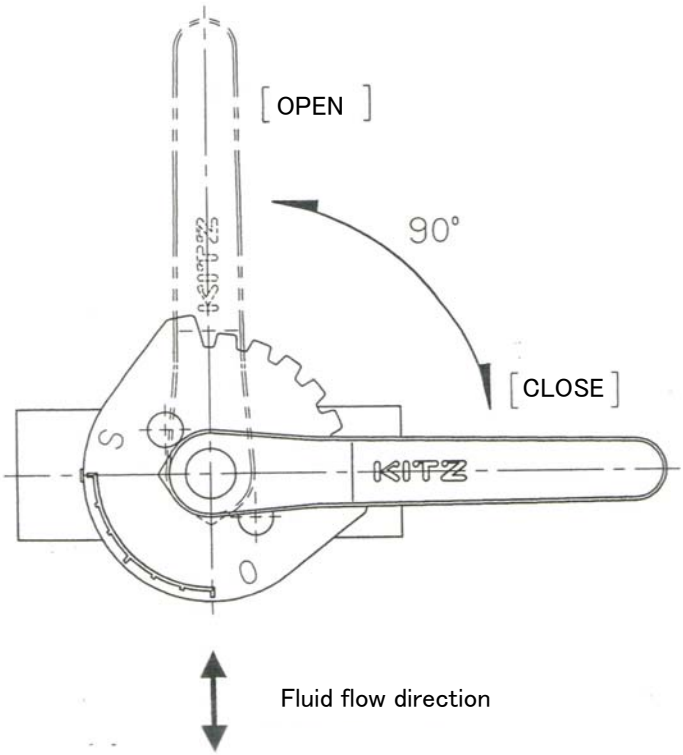

Ⅳ Operation and Maintenance

2.2 Gear Type

2.2.1 The worm gear operation device is mounted on the valve.

2.2.2 According to the letter or arrow on the handwheel, turning the handwheel clockwise will close the valve, and turning the handwheel counterclockwise will open the valve.

2.2.3 Hand wheel operating torque depends on the nominal size and opening position.

2.2.4 Worm gear operator is to transmit a large torque to valve stem, converting a torque from drive shaft by means of reduction gearing unit using worm gears.

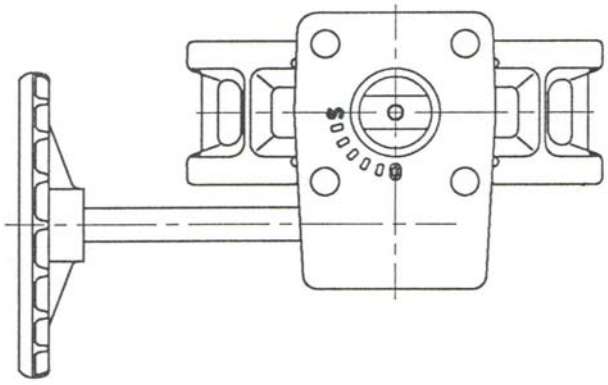

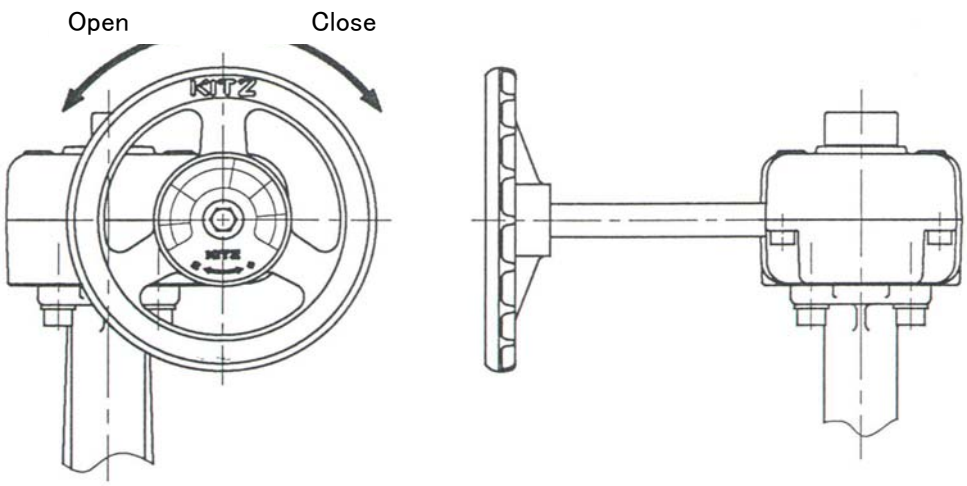

Ⅳ Operation and Maintenance

3. Valve Maintenance

In order to operate your valves safely and satisfactorily, the Valve Maintenance is very important. Here are the Items and Trouble solution.

Items	Areas to be inspected	Inspection Method	Countermeasures
External Leakage	Connection area	Visual check Soap water	Retighten piping bolts evenly and alternately in a star pattern.
	Body surface	Visual check Soap water	Change the valve.
Abnormal Noises	Valve body	Auditory check	Consult a piping engineer.
	Loosened bolts	Auditory check	Retighten bolts.
	Vibration of pipes	Auditory check	Contact a piping engineer
Loosened bolts and nuts	Bolts and nuts	Visual and Tactile check	Retighten bolts and nuts.
Seat leakage	—	—	Remove the foreign objects on seat rubber. Disassemble and inspect the valve. *1 Change the valve.
Valve operation	Valve position	Visual check	Make sure that the valve is in predetermined open/close position.
	Disturbed operation	Visual and tactile check	Inspect the dismantled valve. Change the valve.

CHAPTER V

Periodic Inspection

Ⅴ Periodic Inspection

1. Periodic Inspection

1.1 Carry out periodic inspection about once a year with the valve installed on pipelines.

1.2 Ensure the smooth operation and sufficient valve function to be inspected.

1.3 Refer to Section Ⅳ "Valve Maintenance" for the inspection items to be inspected and inspection methods.

1.4 Carry out the periodic inspection of valves, which are not operated for long period or not daily inspected. (Check all valves.)

1.5 It is extremely important to check valves when the valves are used under the following services or conditions:

a) Erosion and corrosion of valve interior are expected.
b) Choking of fluid is expected.
c) The valve is so important for the whole plant operation.

2. Warnings and Cautions for Periodic Inspection

Make sure to read and understand all items of Ⅳ.1 (Warnings and Cautions for Operation and Maintenance) before periodic inspection.

3. Disassembly and Reassembly

Disassemble and reassemble the valve according the instruction in Section Ⅵ of this manual.

4. Test and Inspection

The followings are the main items for test and inspection.

4.1 Operation test

(1) The valve should be operated smoothly by the lever handle or gear operator without galling or sticking.
(2) The stem should be firmly connected with the disc.
(3) In fully open position, the disc should be parallel to the fluid flow.

4.2 Shell test and seat leakage test

All valves should be subjected to a hydrostatic or pneumatic shell test and seat leakage test at the required pressure.

Refer to the EN 12266-1 for test methods.

Ⅴ Periodic Inspection

4.3 Cautions for shell test and seat leakage test

⚠ CAUTION	
	① Wear the protective items such as goggle, gloves and safety shoes. ② Take some precautions before shell test and seat leakage test for operators' safety. ③ Testing media should be used in according with EN12266-1. ④ Take care of safety issues such as visual inspection of tightened boltings and external leakage at each stage of pressure increment, when air or nitrogen gas is used as testing media.

CHAPTER Ⅵ

Disassembly and Reassembly of Valves

Ⅵ Disassembly and Reassembly of Valves

1. Disassembly

1.1 Warnings and Cautions for Safety

⚠ WARNING	
	① Operator should take an appropriate caution for not being exposed to the fluid or not to catch fire. ② Take attention to blow out the stem and bottom stem when disassembly the valve. Because line pressure may come into the stem hole on the disc during in service.

⚠ CAUTION	
	① Wear the protective items such as goggles, gloves and safety shoes. ② Take care not to catch fingers during disassembly. ③ When disassembling valves of big mass one, use an appropriate lifting machine for safety operation.

1.2 Before Disassembly

1.2.1 Place the valve in a dust-free area.

1.2.2 Take care not to damage the sealing surfaces such as disc seat surface and seat rubber.

Ⅵ Disassembly and Reassembly of Valves

1.3 Disassembly (DN 50 to DN 200)

1.3.1 Give adequate identification marks on edges of the operators (gear, pneumatic or electrical valve actuator) and the body (1) for right and easy reassembly. Remove the operators from the body by unscrewing the hexagon bolts and nuts.

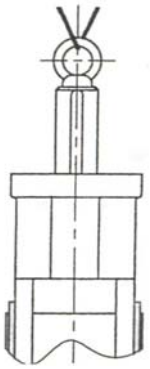

1.3.2 Remove the plug (85) from the body (1).

1.3.3 Remove the bearing (7) from the body (1), remove the stem (3) by making use of the tapped hole on the top of the stem.

1.3.4 Pull out the stem (3) from the body (1).
At this point, the stem (3) and O-ring (45B) are removed together.

1.3.5 Insert the rod into the bottom stem (103) and pull out the bottom stem (103) from the body (1).

1.3.6 Fix the body (1), and fully open the valve.
Remove the disc from the body (1) taking care not to damage the edge of the disc.

1.3.7 Remove the rubber seat (106) by inserting a flat blade screwdriver between the body and seat to make the space and putting the hand into that space to pull the seat out.

.

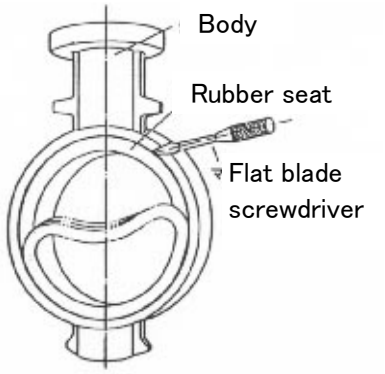

Ⅵ Disassembly and Reassembly of Valves

1.4 Disassembly (DN 250 and DN300)

1.4.1 Give adequate identification marks on edges of the operators (gear, pneumatic or electrical valve actuator) and the body (1) for right and easy reassembly. Remove the operators from the body by unscrewing the hexagon bolts and nuts.

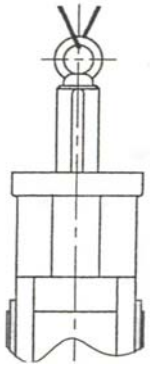

1.4.2 Unscrew the end plate bolts (35), and remove the end plate (147) from the body (1).

1.4.3 After unscrewing the gland plate bolts (36) and removing the gland plate (144) from the body (1), remove the stem (3) by making use of the tapped hole on the top of the stem.

1.4.4 Pull out the stem (3) from the body (1).
At this point, the stem (3), the grand ring (7) and O-ring (45A,45B) are removed together.

1.4.5 Insert the endplate bolt (35) into the O-ring block (147) and pull out the O-ring block (147) from the body (1).
At this point, O-ring block (147) and O-ring (45C) are removed together.

1.4.6 Insert the endplate bolt (35) into the bottom stem (103) and pull out the bottom stem (103) from the body (1).

1.4.7 Fix the body (1), and fully open the valve. Remove the disc (4) from the body (1) taking care not to damage the edge of the disc.

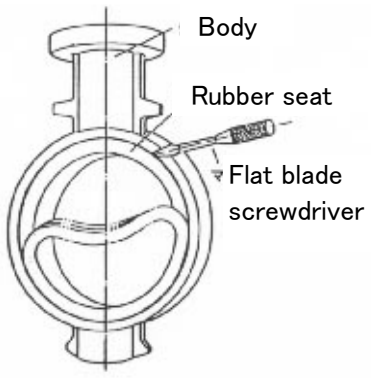

1.4.8 Remove the rubber seat (106) by inserting a flat blade screwdriver between the body and seat to make the space and putting the hand into that space to pull the seat out.

Ⅵ Disassembly and Reassembly of Valves

2 Reassembly

2.1 Cautions for safety

⚠ CAUTION	
	① Wear the protective items such as goggle, gloves and safety shoes. ② Take care not to catch fire during reassembly. ③ Take care not to catch, fingers during reassembly. ④ O-ring shall be used new one. The reuse of o-rings may cause leakage. ⑤ When reassembling valves of large size, use appropriate machine to lift up valves.

2.2 Before Reassembly

2.2.1 Check all necessary parts before reassembly. If the valve is found dissatisfactory in its function, replace the valve.

2.2.2 In case the parts are reused, ensure to clean the parts to completely remove the oil, dust and other foreign objects.

2.2.3 Reassemble the valve at a dust-free place.

2.2.4 Take care not to damage the seating area of the disc and rubber seat.

2.2.5 Tighten all bolts and nuts securely.

Ⅵ Disassembly and Reassembly of Valves

2.3 Reassembly (DN 50 to DN 200)

2.3.1 Assemble the backup ring (146) to the rubber seat (106).

2.3.2 Fix the body (1) upside down. Press down the rubber seat (106) with bottom up by the thumb, concaving the rubber seat to insert the rubber seat from top first then bottom into the body. Match the groove of the body with the projection of the rubber seat. Be sure to match the holes of the rubber seat into the holes of the body. Apply some grease (*1) to the holes on the body shaft for easy works.

2.3.3 After insertion, align the holes of the rubber seat (106) with those of the body

2.3.4 Press the disc (4) into the body (1) with fully opening position. Take care not to damage the disc edge. Apply a little grease (*1) to the top and the bottom of the disc, and the rubber seat, and its sealing area for easy works. Make sure that the holes of the body are correctly aligned with those of the disc by looking from the body top and bottom. (Before reassembly, make sure for the correct direction of the stem and disc.)

2.3.5 Hammer the bottom stem (103) into the body (1) with the wooden hammer.
Apply grease (*1) lightly to the stem.

2.3.6 Assemble the O-ring (45B) and the snap ring (48) to the stem (3)

2.3.7 Hammer the stem (3) with the wooden hammer into the body (1) matching the hole configuration (Square) of the disc (4). Apply grease (*1) lightly to the stem.

2.3.8 Install the bearing (7) and O-ring (45A) to the body (1).

2.3.9 Install the plug (85) to the body (1).

2.3.10 Adjust the disc (4) and the valve operation device to appropriate open/close position
Fix the body (1) and fix the operator with hexagon bolts and nuts. Match the marks provided before disassembly.

(*1) Shell Cassida Grease, "HTS 2" is recommended.

Ⅵ Disassembly and Reassembly of Valves

2. 4 Reassembly (DN 250 and DN 300)

2.4.1 Assemble the backup ring (146) to the rubber seat (106).

2.4.2 Fix the body (1) upside down. Press down the rubber seat (106) with bottom up by the thumb, concaving the rubber seat to insert the rubber seat from top first then bottom into the body. Match the groove of the body with the projection of the rubber seat. Be sure to match the holes of the rubber seat into the holes of the body. Apply some grease (*1) to the holes on the body shaft for easy works.

2.4.3 After insertion, align the holes of the rubber seat (106) with those of the body.

2.4.4 Press the disc (4) into the body (1) with fully opening position. Take care not to damage the disc edge. Apply a little grease (*1) to the top and the bottom of the disc, and the rubber seat, and its sealing area for easy works. Make sure that the holes of the body are correctly aligned with those of the disc by looking from the body top and bottom. (Before reassembly, make sure for the correct direction of the stem and disc.)

2.4.5 Hammer the bottom stem (103) into the body (1) with the wooden hammer.
Apply grease (*1) lightly to the stem.

2.4.6 Assemble the snap ring (48) to the stem (3).

2.4.7 Hammer the stem (3) with the wooden hammer into the body (1) matching the hole configuration (key way groove) of the disc (4). Apply grease (*1) lightly to the stem.

2.4.6 Assemble the O-ring (45A,45B) to the grand ring (7).

2.4.7 Install the grand ring (7) and the gland plate (144) to the body (1).

2.4.8 Assemble the O-ring (45C) to the O-ring block (147).

2.4.9 Install the O-ring block (147) and the end plate (147) to the body (1).

2.4.10 Adjust the disc (4) and the valve operation device to appropriate open/close position. Fix the body (1) and fix the operator with hexagon bolts and nuts. Match the marks provided before disassembly.

(*1) Shell Cassida Grease, "HTS 2" is recommended.

Ⅵ Disassembly and Reassembly of Valves

3. Cross-Sectional Assembly Drawing. (50mm to 200mm)

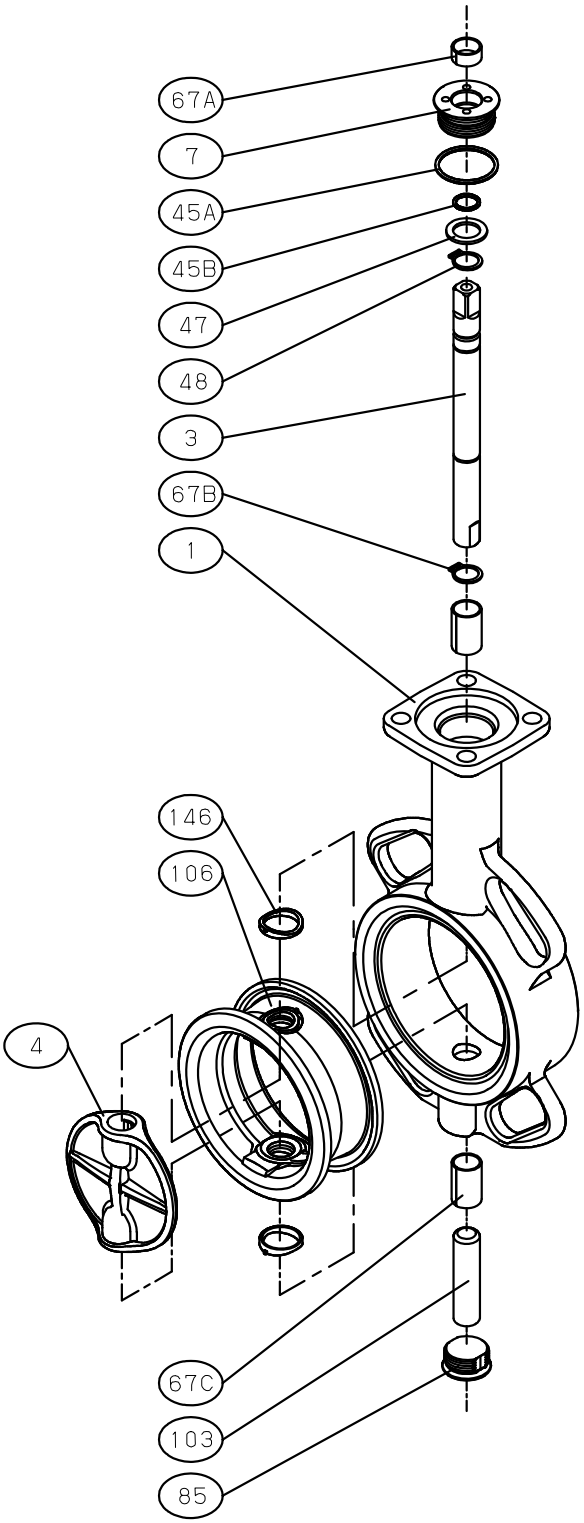

No.	Parts Name
1	Body
3	Stem
4	Disc
7	Bearing
45A	O ring
45B	O ring
47	Thrust bearing
48	Snap ring
67A	Stem bearing
67B	Stem bearing
67C	Stem bearing
85	Plug
103	Bottom stem
106	Rubber seat
146	Backup ring

This drawing indicates a typical construction of the valve.

Refer to the approval drawing before disassembly and assembly.

Ⅵ Disassembly and Reassembly of Valves

4. Cross-Sectional Assembly Drawing. (250mm and 300mm)

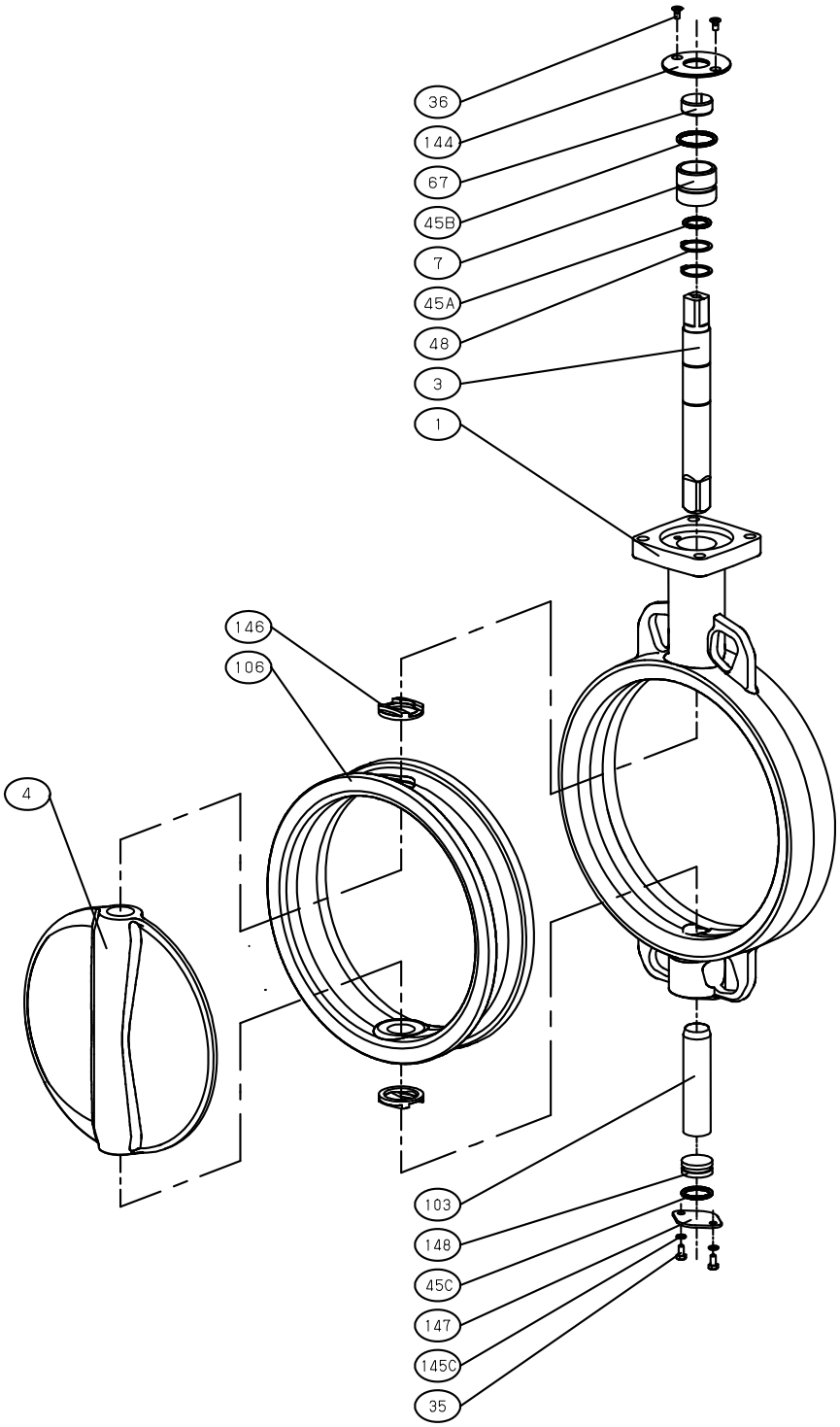

No.	Parts Name
1	Body
3	Stem
4	Disc
7	Grand ring
45A	O ring
45B	O ring
45C	O ring
47	Thrust bearing
48	Snap ring
67A	Stem bearing
67B	Stem bearing
67C	Stem bearing
103	Bottom stem
106	Rubber seat
144	Gland plate
145C	Spring washer
147	End plate
148	O ring block

This drawing introduces a typical construction of the valve.
Refer to the approval drawing before disassembly and assembly.