Analog to Digital Converters
- A/D Converters
- Audio A/D Converters
- Capacitance to Digital Converters
- Energy Measurement
- Isolated A/D Converters
- Synchro/Resolver to Digital Converters
- Temperature to Digital Converters
- Touchscreen Controllers
- Video Decoders
- Voltage to Frequency Converters

All Product Categories

Design Center

All Solutions/ Applications

Buy Online

AD9233 12-Bit, 80 MSPS/105 MSPS/125 MSPS, 1.8 V Analog-to-Digital Converter

Data Sheets

- Rev A, 08/2006 (pdf, 1262K) — Email PDF
- Lead(Pb) - Free Data — (Data Sheet Help)

Application Notes | Evaluation Boards | Price, Packaging, and Availability

Product Description

The AD9233 is a monolithic, single 1.8 V supply, 12-bit, 80 MSPS/ 105 MSPS/125 MSPS analog-to-digital converter (ADC), featuring a high performance sample-and-hold amplifier (SHA) and on-chip voltage ...More

Specifications

Resolution (Bits)	12bit
T-Put Rate	125MSPS
# Chan	1
Supply V	Multi(+1.8Anlg, +3.3Dig)
Pwr Diss (max)	425mW
Interface	Par
Ain Range	(2Vref) p-p, 2 V p-p
SNR (dB)	69.5dB
Pkg Type	CSP

Find Similar Products

Functional Block Diagram

Enlarge

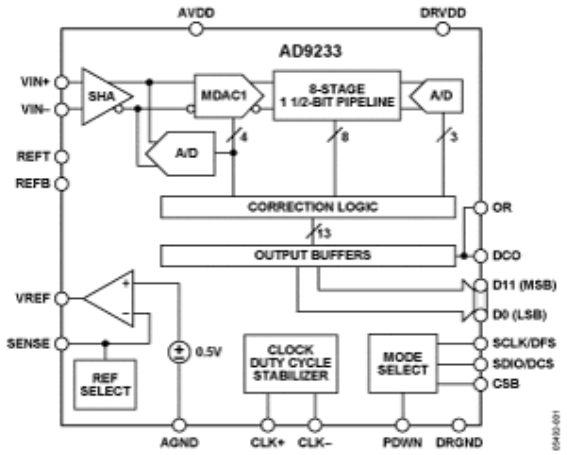

Symbols and Footprints

Other Diagrams: Pin Out Diagram

Features

- 1.8 V analog supply operation
- 1.8 V to 3.3 V output supply
- SNR = 69.5 dBc (70.5 dBFS) to 70 MHz input
- SFDR = 85 dBc to 70 MHz input
- Low power: 395 mW @ 125 MSPS
- Differential input with 650 MHz bandwidth
- On-chip voltage reference and sample-and-hold amplifier
- DNL = ±0.15 LSB
- Flexible analog input: 1 V p-p to 2 V p-p range
- Offset binary, Gray code, or twos complement data format
- Data output clock and clock duty cycle stabilizer
- Serial port control
  Built-in selectable digital test pattern generation
  Programmable clock and data alignment

New A/D Converters

AD7767 - 24-Bit, 8.5 mW, 109 dB, 128/64/32 kSPS ADCs

AD7980 - 16-Bit, 1 MSPS PulSAR® ADC in MSOP/QFN

AD7766 - 24-Bit, 8.5 mW, 109 dB, 128/64/32 kSPS ADCs

AD7366-5 - True Bipolar Input, 12-Bit, 2-Channel, Simultaneous Sampling SAR ADC

More...

Design Tools

ADIsimADC

IBIS Models

Evaluation Boards/ Tools

Related Tech Info

Seminars & Webcasts

Application Notes

Tutorials

More...

Resources

Seminars & Webcasts

Press Releases

Product Highlights

More...

Signal Chains

www.datasheet.live

Design Tools

High-Speed ADC FIFO Evaluation Kit

There are two high speed ADC evaluation kits available. The FIFO-based data acquisition board has a 32kB FIFO depth and acquires up to 133Msps on each channel. The FPGA-based data acquisition board has a 64kB FIFO depth and acquires up to 800Msps on each channel.

ADIsimADC

ADIsimADC simulates behavior using many critical specifications of data converters, including offset, gain, sample rate, bandwidth, jitter, latency, both AC and DC linearity. These models provide a way to validate performance of the converter at the system level to determine the applicability of a selected device. Users can run real-time FFT and time-domain analysis; analyze SNR, SINAD, SFDR, and harmonics; export data for additional analysis.

Price, Packaging, and Availability

Print Table

AD9233 Model Options

Model	Status	Package	Pins	Temp Range	Price* (1000 pcs.)	Available	RoHS Compliant	Samples Cart	Purchase Cart
AD80141BCPZ-140	Prodn	48 ld LFCSP (7x7x.85mm w/4.1mm Pad)	48	Ind	$17.40	9/21/2007	Y Material Declaration	Add to Cart	Add to Cart
AD9233-105EB	LAST TIME BUY	EVALUATION BOARDS	48	TBD	-	-	N	Contact ADI	Contact ADI
AD9233-105EBZ	Prodn	EVALUATION BOARDS	48	TBD	-	-	Y	Contact ADI	Add to Cart
AD9233-125EBZ	Prodn	EVALUATION BOARDS	48	TBD	$200.00	9/21/2007	Y	Contact ADI	Add to Cart
AD9233BCPZ-105	Prodn	48 ld LFCSP (7x7x.85mm w/4.1mm Pad)	48	Ind	$22.75	9/21/2007	Y Material Declaration	Add to Cart	Add to Cart
AD9233BCPZ-125	Prodn	48 ld LFCSP (7x7x.85mm w/4.1mm Pad)	48	Ind	$26.95	9/21/2007	Y Material Declaration	Add to Cart	Add to Cart
AD9233BCPZ-80	Prodn	48 ld LFCSP (7x7x.85mm w/4.1mm Pad)	48	TBD	$16.70	9/21/2007	Y Material Declaration	Add to Cart	Add to Cart
AD9233BCPZRL7-105	Prodn	48 ld LFCSP (7x7x.85mm w/4.1mm Pad)	48	Ind	$22.75	9/21/2007	Y Material Declaration	Contact ADI	Add to Cart
AD9233BCPZRL7-125	Prodn	48 ld LFCSP (7x7x.85mm w/4.1mm Pad)	48	Ind	$26.95	10/12/2007	Y Material Declaration	Contact ADI	Add to Cart

Interactive Signal Chains

The USA list pricing shown is for BUDGETARY USE ONLY, shown in United States dollars (FOB USA per unit for the stated volume), and is subject to change. International prices may differ due to local duties, taxes, fees and exchange rates. For volume-specific price or delivery quotes, please contact your local Analog Devices, Inc. sales office or authorized distributor. Pricing displayed for Evaluation Boards and Kits is based on 1-piece pricing.

View Sales and Distribution Offices

View Samples Cart

View Purchase Cart

Find Similar Products

Parametric Selection Table

Expand Table

Part#	Res	Throughput Rate	# of Inputs	Operating Pwr Diss
AD9233-125	12	125MSPS	1	425mW
AD9230-170	12	170MSPS	1	407mW
AD9211-200	10	200MSPS	1	356mW
AD9230-250	12	250MSPS	1	463mW
AD9430-170	12	170MSPS	1	1.43W
AD9433-125	12	125MSPS	1	1.5W
AD9233-105	12	105MSPS	1	350mW
AD9430-210	12	210MSPS	1	1.7W
AD9236	12	80MSPS	1	411mW
AD9237-65	12	65MSPS	1	270mW
AD9235-65	12	65MSPS	1	350mW

© 1995-2007 Analog Devices, Inc. All Rights Reserved
This site is **optimized for IE 6.0+, NN 7.1, and Mozilla**.