lenovo

ThinkCentre E73
User Guide



Machine Types: 10AS, and 10AV

Note: Before using this information and the product it supports, be sure to read and understand the “Important safety information” on page v and Appendix A “Notices” on page 115.

Second Edition (November 2013)

© Copyright Lenovo 2013.

LIMITED AND RESTRICTED RIGHTS NOTICE: If data or software is delivered pursuant a General Services Administration “GSA” contract, use, reproduction, or disclosure is subject to restrictions set forth in Contract No. GS-35F-05925.

Contents

Important safety information v
Service and upgrades v
Static electricity prevention v
Power cords and power adapters vi
Extension cords and related devices vi
Plugs and outlets vii
External devices vii
Heat and product ventilation vii
Operating environment viii
Modem safety information viii
Laser compliance statement ix
Power supply statement ix
Cleaning and maintenance ix

Chapter 1. Product overview 1
Features 1
Specifications 5
Lenovo programs 5
Accessing Lenovo programs on the Windows 7 operating system 5
Accessing Lenovo programs on the Windows 8 or Windows 8.1 operating system 7
An introduction to Lenovo programs 7
Locations 9
Locating connectors, controls, and indicators on the front of your computer 9
Locating connectors on the rear of your computer 10
Locating components 11
Locating parts on the system board 12
Locating internal drives 13
Machine type and model label 14

Chapter 2. Using your computer . . . 15
Frequently asked questions 15
Navigating among screens on the Windows 8 and Windows 8.1 operating systems 16
Navigating on Windows 8 16
Navigating on Windows 8.1 17
Accessing Control Panel on the Windows 8 or Windows 8.1 operating system 18
Using the keyboard 19
Using Windows shortcut keys 19
Using a fingerprint reader 19
Using the wheel mouse 20
Adjusting audio 20
About your computer audio 20
Setting the volume from the desktop 20
Setting the volume from Control Panel . . . 21
Using CDs and DVDs 21
Handling and storing CD and DVD media . . 22
Playing a CD or DVD 22
Recording a CD or DVD 22

Chapter 3. You and your computer . . 25
Accessibility and comfort 25
Arranging your workspace 25
Comfort 25
Glare and lighting 26
Air circulation 26
Electrical outlets and cable lengths 26
Registering your computer 27
Moving your computer to another country or region 27
Voltage-selection switch 27
Replacement power cords 28

Chapter 4. Security 29
Security features 29
Locking the computer cover 30
Attaching a Kensington-style cable lock 31
Using passwords 31
BIOS passwords 31
Windows passwords 32
Configuring the fingerprint reader 32
Using and understanding firewalls 32
Protecting data against viruses 32

Chapter 5. Installing or replacing hardware 35
Handling static-sensitive devices 35
Installing or replacing hardware 35
Installing external options 35
Removing the computer cover 36
Removing and reinstalling the front bezel . . 37
Installing or replacing a PCI Express card . . 38
Installing or replacing a memory module . . . 41
Replacing the battery 43
Replacing the primary hard disk drive 44
Replacing the optical drive 46
Replacing the power supply assembly . . . 48
Replacing the heat sink and fan assembly . . 50
Replacing the microprocessor 52
Replacing the front audio and USB assembly 54

© Copyright Lenovo 2013

Replacing the rear fan assembly 55
Replacing the WiFi units 57
Installing or removing the rear WiFi antenna . 63
Installing or removing the front WiFi antenna . 64
Replacing the keyboard or mouse 66
Completing the parts replacement 67

Chapter 6. Recovery information . . . 69
Recovery information for the Windows 7 operating system 69
Creating and using recovery media 69
Performing backup and recovery operations . 70
Using the Rescue and Recovery workspace . 71
Creating and using a rescue medium 72
Reinstalling preinstalled applications and device drivers 73
Reinstalling software programs 74
Reinstalling device drivers 74
Solving recovery problems 74
Recovery information for the Windows 8 or Windows 8.1 operating system 75
Refreshing your computer 75
Resetting your computer to the factory default settings. 75
Using the advanced startup options 75
Recovering your operating system if Windows 8 or Windows 8.1 fails to start 76

Chapter 7. Using the Setup Utility program 77
Starting the Setup Utility program 77
Viewing and changing settings 77
Using passwords. 77
Password considerations. 78
Power-On Password 78
Administrator Password 78
Hard Disk Password. 78
Setting, changing, and deleting a password . 78
Erasing lost or forgotten passwords (clearing CMOS) 79
Enabling or disabling a device 79
Selecting a startup device 80
Selecting a temporary startup device 80
Selecting or changing the startup device sequence 80
Enabling ErP compliance mode 80
Exiting the Setup Utility program 81

Chapter 8. Updating system programs 83
Using system programs 83
Updating (flashing) the BIOS from a disc 83
Updating (flashing) the BIOS from your operating system 84
Recovering from a POST/BIOS update failure . . 84

Chapter 9. Preventing problems . . . 85
Keeping your computer current 85
Getting the latest device drivers for your computer 85
Updating your operating system 85
Using System Update 86
Cleaning and maintenance 86
Basics 86
Cleaning your computer 87
Good maintenance practices 88
Moving your computer 88

Chapter 10. Troubleshooting and diagnostics 91
Basic troubleshooting 91
Troubleshooting procedure 92
Troubleshooting 92
Audio problems 93
CD problems 94
DVD problems 95
Intermittent problems 97
Keyboard, mouse, or pointing device problems 97
Monitor problems. 99
Networking problems 101
Option problems 103
Performance and lockup problems 104
Printer problems 106
Serial port problems. 106
Software problems 107
USB problems 108
Diagnostic programs 108
Lenovo Solution Center 109
Lenovo ThinkVantage Toolbox. 109
PC-Doctor for DOS 109

Chapter 11. Getting information, help, and service 111
Information resources 111
Lenovo ThinkVantage Tools 111
Lenovo Welcome 111
Help and Support. 111
Safety and Warranty. 111
Lenovo Web site 111
Lenovo Support Web site. 112
Help and service 112
Using the documentation and diagnostic programs 112

Calling for service 112
Using other services 113
Purchasing additional services 113

Appendix A. Notices 115
Trademarks 116

Appendix B. Regulatory information 117
Export classification notice 117
Television output notice 117
Electronic emissions notices 117
Federal Communications Commission Declaration of Conformity 117
Eurasian compliance mark 119
Additional regulatory information 119

Appendix C. WEEE and recycling information 121
Important WEEE information 121
Recycling information for Japan 121
Recycling information for Brazil 122
Battery recycling information for Taiwan 122
Battery recycling information for the European Union 122

Appendix D. Restriction of Hazardous Substances Directive (RoHS) 125
European Union RoHS 125
China RoHS 125
Turkish RoHS 125
Ukraine RoHS 126
India RoHS 126

Appendix E. China Energy Label . . 127

Index 129

© Copyright Lenovo 2013

Important safety information

CAUTION:
Before using this manual, be sure to read and understand all the related safety information for this product. Refer to the information in this section and the safety information in the *Safety, Warranty, and Setup Guide* **that you received with this product. Reading and understanding this safety information reduces the risk of personal injury and damage to your product.**

If you no longer have a copy of the *Safety, Warranty, and Setup Guide*, you can obtain a Portable Document Format (PDF) version from the Lenovo® Support Web site at http://support.lenovo.com. The Lenovo Support Web site also provides the *Safety, Warranty, and Setup Guide* and this *User Guide* in additional languages.

Service and upgrades

Do not attempt to service a product yourself unless instructed to do so by the Customer Support Center or your documentation. Only use a Service Provider who is approved to repair your particular product.

Note: Some computer parts can be upgraded or replaced by the customer. Upgrades typically are referred to as options. Replacement parts approved for customer installation are referred to as Customer Replaceable Units, or CRUs. Lenovo provides documentation with instructions when it is appropriate for customers to install options or replace CRUs. You must closely follow all instructions when installing or replacing parts. The Off state of a power indicator does not necessarily mean that voltage levels inside a product are zero. Before you remove the covers from a product equipped with a power cord, always make sure that the power is turned off and that the product is unplugged from any power source. For more information on CRUs, refer to Chapter 5 “Installing or replacing hardware” on page 35. If you have any questions or concerns, contact the Customer Support Center.

Although there are no moving parts in your computer after the power cord has been disconnected, the following warnings are required for your safety.

CAUTION:

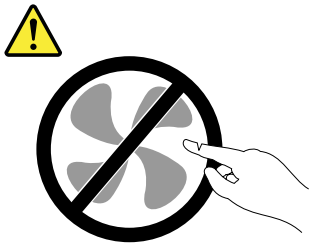

Hazardous moving parts. Keep fingers and other body parts away.

CAUTION:



Before replacing any CRUs, turn off the computer and wait three to five minutes to let the computer cool before opening the cover.

Static electricity prevention

Static electricity, although harmless to you, can seriously damage computer components and options. Improper handling of static-sensitive parts can cause damage to the part. When you unpack an option

© Copyright Lenovo 2013

or CRU, do not open the static-protective package containing the part until the instructions direct you to install it.

When you handle options or CRUs, or perform any work inside the computer, take the following precautions to avoid static-electricity damage:

- Limit your movement. Movement can cause static electricity to build up around you.
- Always handle components carefully. Handle adapters, memory modules, and other circuit boards by the edges. Never touch exposed circuitry.
- Prevent others from touching components.
- When you install a static-sensitive option or CRU, touch the static-protective package containing the part to a metal expansion-slot cover or other unpainted metal surface on the computer for at least two seconds. This reduces static electricity in the package and your body.
- When possible, remove the static-sensitive part from the static-protective packaging and install the part without setting it down. When this is not possible, place the static-protective packaging on a smooth, level surface and place the part on it.
- Do not place the part on the computer cover or other metal surface.

Power cords and power adapters

Use only the power cords and power adapters supplied by the product manufacturer.

The power cords shall be safety approved. For Germany, it shall be H05VV-F, 3G, 0.75 mm^2, or better. For other countries, the suitable types shall be used accordingly.

Never wrap a power cord around a power adapter or other object. Doing so can stress the cord in ways that can cause the cord to fray, crack, or crimp. This can present a safety hazard.

Always route power cords so that they will not be walked on, tripped over, or pinched by objects.

Protect power cord and power adapters from liquids. For instance, do not leave your power cord or power adapter near sinks, tubs, toilets, or on floors that are cleaned with liquid cleansers. Liquids can cause a short circuit, particularly if the power cord or power adapter has been stressed by misuse. Liquids also can cause gradual corrosion of power cord terminals and/or the connector terminals on a power adapter, which can eventually result in overheating.

Always connect power cords and signal cables in the correct order and ensure that all power cord connectors are securely and completely plugged into receptacles.

Do not use any power adapter that shows corrosion at the ac input pins or shows signs of overheating (such as deformed plastic) at the ac input or anywhere on the power adapter.

Do not use any power cords where the electrical contacts on either end show signs of corrosion or overheating or where the power cord appears to have been damaged in any way.

Extension cords and related devices

Ensure that extension cords, surge protectors, uninterruptible power supplies, and power strips that you use are rated to handle the electrical requirements of the product. Never overload these devices. If power strips are used, the load should not exceed the power strip input rating. Consult an electrician for more information if you have questions about power loads, power requirements, and input ratings.

Plugs and outlets

If a receptacle (power outlet) that you intend to use with your computer equipment appears to be damaged or corroded, do not use the outlet until it is replaced by a qualified electrician.

Do not bend or modify the plug. If the plug is damaged, contact the manufacturer to obtain a replacement.

Do not share an electrical outlet with other home or commercial appliances that draw large amounts of electricity; otherwise, unstable voltage might damage your computer, data, or attached devices.

Some products are equipped with a three-pronged plug. This plug fits only into a grounded electrical outlet. This is a safety feature. Do not defeat this safety feature by trying to insert it into a non-grounded outlet. If you cannot insert the plug into the outlet, contact an electrician for an approved outlet adapter or to replace the outlet with one that enables this safety feature. Never overload an electrical outlet. The overall system load should not exceed 80 percent of the branch circuit rating. Consult an electrician for more information if you have questions about power loads and branch circuit ratings.

Be sure that the power outlet you are using is properly wired, easily accessible, and located close to the equipment. Do not fully extend power cords in a way that will stress the cords.

Be sure that the power outlet provides the correct voltage and current for the product you are installing.

Carefully connect and disconnect the equipment from the electrical outlet.

External devices

Do not connect or disconnect any external device cables other than Universal Serial Bus (USB) and 1394 cables while the computer power is on; otherwise, you might damage your computer. To avoid possible damage to attached devices, wait at least five seconds after the computer is shut down to disconnect external devices.

Heat and product ventilation

Computers, power adapters, and many accessories can generate heat when turned on and when batteries are charging. Always follow these basic precautions:

- Do not leave your computer, power adapter, or accessories in contact with your lap or any part of your body for an extended period when the products are functioning or when the battery is charging. Your computer, power adapter, and many accessories produce some heat during normal operation. Extended contact with the body could cause discomfort or, potentially, a skin burn.
- Do not charge the battery or operate your computer, power adapter, or accessories near flammable materials or in explosive environments.
- Ventilation slots, fans, and heat sinks are provided with the product for safety, comfort, and reliable operation. These features might inadvertently become blocked by placing the product on a bed, sofa, carpet, or other flexible surface. Never block, cover, or disable these features.

Inspect your desktop computer for dust accumulation at least once every three months. Before inspecting your computer, turn off the power and unplug the computer's power cord from the electrical outlet; then remove any dust from vents and perforations in the bezel. If you notice external dust accumulation, then examine and remove dust from the inside of the computer including heat sink inlet fins, power supply vents, and fans. Always turn off and unplug the computer before opening the cover. If possible, avoid operating your computer within two feet of high-traffic areas. If you must operate your computer in or near a high-traffic area, inspect and, if necessary, clean your computer more frequently.

© Copyright Lenovo 2013

For your safety and to maintain optimum computer performance, always follow these basic precautions with your desktop computer:

- Keep the cover closed whenever the computer is plugged in.
- Regularly inspect the outside of the computer for dust accumulation.
- Remove dust from vents and any perforations in the bezel. More frequent cleanings might be required for computers in dusty or high-traffic areas.
- Do not restrict or block any ventilation openings.
- Do not store or operate your computer inside furniture, as this might increase the risk of overheating.
- Airflow temperatures into the computer should not exceed 35°C (95°F).
- Do not install air filtration devices. They may interfere with proper cooling.

Operating environment

The optimal environment in which to use your computer is 10°C-35°C (50°F-95°F) with humidity ranging between 35% and 80%. If your computer is stored or transported in temperatures less than 10°C (50°F), allow the cold computer to rise slowly to an optimal operating temperature of 10°C-35°C (50°F-95°F) before use. This process could take two hours in extreme conditions. Failure to allow your computer to rise to an optimal operating temperature before use could result in irreparable damage to your computer.

If possible, place your computer in a well-ventilated and dry area without direct exposure to sunshine.

Keep electrical appliances such as an electric fan, radio, high-powered speakers, air conditioner, and microwave oven away from your computer because the strong magnetic fields generated by these appliances can damage the monitor and data on the hard disk drive.

Do not place any beverages on top of or beside the computer or other attached devices. If liquid is spilled on or in the computer or an attached device, a short circuit or other damage might occur.

Do not eat or smoke over your keyboard. Particles that fall into your keyboard can cause damage.

Modem safety information

CAUTION:
To reduce the risk of fire, use only No. 26 AWG or larger (for example, No. 24 AWG) telecommunication line cord listed by Underwriters Laboratories (UL) or certified by the Canadian Standards Association (CSA).

To reduce the risk of fire, electrical shock, or injury when using telephone equipment, always follow basic safety precautions, such as:

- Never install telephone wiring during a lightning storm.
- Never install telephone jacks in wet locations unless the jack is specifically designed for wet locations.
- Never touch uninsulated telephone wires or terminals unless the telephone line has been disconnected at the network interface.
- Use caution when installing or modifying telephone lines.
- Avoid using a telephone (other than a cordless type) during an electrical storm. There may be a remote risk of electric shock from lightning.
- Do not use the telephone to report a gas leak in the vicinity of the leak.

Laser compliance statement

CAUTION:
When laser products (such as CD-ROMs, DVD drives, fiber optic devices, or transmitters) are installed, note the following:

- **Do not remove the covers. Removing the covers of the laser product could result in exposure to hazardous laser radiation. There are no serviceable parts inside the device.**
- **Use of controls or adjustments or performance of procedures other than those specified herein might result in hazardous radiation exposure.**

DANGER

Some laser products contain an embedded Class 3A or Class 3B laser diode. Note the following:

Laser radiation when open. Do not stare into the beam, do not view directly with optical instruments, and avoid direct exposure to the beam.

Power supply statement

Never remove the cover on a power supply or any part that has the following label attached.



Hazardous voltage, current, and energy levels are present inside any component that has this label attached. There are no serviceable parts inside these components. If you suspect a problem with one of these parts, contact a service technician.

Cleaning and maintenance

Keep your computer and workspace clean. Shut down the computer and then disconnect the power cord before cleaning the computer. Do not spray any liquid detergent directly on the computer or use any detergent containing flammable material to clean the computer. Spray the detergent on a soft cloth and then wipe the computer surfaces.

© Copyright Lenovo 2013

Chapter 1. Product overview

This chapter provides information about the computer features, specifications, software programs provided by Lenovo, and locations of connectors, components, parts on the system board, and internal drives.

Features

This section introduces the computer features. The information covers a variety of models.

To view the information about your specific model, do one of the following:

- Go into the Setup Utility program by following the instructions in Chapter 7 “Using the Setup Utility program” on page 77. Then, select **Main → System Summary** to view the information.
- On the Microsoft® Windows® 7 operation system, click **Start**, right-click **Computer**, and select **Properties** to view the information.
- On the Microsoft Windows 8 or Windows 8.1 operating system, go to the desktop and move your pointer to the top-right or bottom-right corner of the screen to display the charms. Then click **Settings → PC info** to view the information.

Microprocessor

Your computer comes with one of the following microprocessors (internal cache size varies by model type):

- Intel® Core™ i3 microprocessor
- Intel Core i5 microprocessor
- Intel Core i7 microprocessor
- Intel Celeron® microprocessor
- Intel Pentium® microprocessor

Memory

Your computer supports up to two double data rate 3 unbuffered dual inline memory modules (DDR3 UDIMMs).

Internal drives

- Optical drive: DVD-ROM or DVD-R (available in some models)
- Hybrid hard disk drive (available in some models)
- Serial Advanced Technology Attachment (SATA) hard disk drive
- SATA solid-state drive (available in some models)

Video subsystem

- Integrated graphics for a Video Graphics Array (VGA) connector and a DisplayPort connector
- Peripheral Component Interconnect (PCI) Express x16 graphics card slot on the system board for a discrete graphics card

Audio subsystem

- Integrated high-definition (HD) audio
- Audio line-in connector, audio line-out connector, and microphone connector on the rear panel

© Copyright Lenovo 2013

- Microphone connector and headphone connector on the front panel
- Internal speaker (installed in some models)

Connectivity

- PCI Express Fax modem (some models)

System management features

- Ability to store power-on self-test (POST) hardware test results
- Desktop Management Interface (DMI)

  Desktop Management Interface provides a common path for users to access information about all aspects of a computer, including processor type, installation date, attached printers and other peripherals, power sources, and maintenance history.
- ErP compliance mode

  The energy-related products directive (ErP) compliance mode reduces the consumption of electricity when your computer is in standby or off mode. For more information, see “Enabling ErP compliance mode” on page 80.
- Intel Standard Manageability

  Intel Standard Manageability is hardware and firmware technology that builds certain functionality into computers in order to make them easier and less expensive for businesses to monitor, maintain, update, upgrade, and repair.
- Preboot Execution Environment (PXE)

  The Preboot Execution Environment is an environment to start computers using a network interface independent of data storage devices (such as the hard disk drive) or installed operating systems.
- System Management (SM) Basic Input/Output System (BIOS) and SM software

  The SM BIOS specification defines data structures and access methods in a BIOS that allows a user or application to store and retrieve information specific about the computer in question.
- Wake on LAN

  Wake on LAN is an Ethernet computer networking standard that allows a computer to be turned on or woken up by a network message. The message is usually sent by a program running on another computer on the same local area network.
- Wake on Ring

  Wake on Ring, sometimes referred to as Wake on Modem, is a specification that allows supported computers and devices to resume from sleep or hibernation mode.
- Windows Management Instrumentation (WMI)

  Windows Management Instrumentation is a set of extensions to the Windows Driver Model. It provides an operating system interface through which instrumented components provide information and notification.

Input/Output (I/O) features

- One DisplayPort connector
- One Ethernet connector
- One 9-pin serial port (optional)
- One VGA monitor connector
- Six Universal Serial Bus (USB) connectors
  - Two USB 2.0 connectors on the front panel
  - Two USB 2.0 connectors on the rear panel
  - Two USB 3.0 connectors on the rear panel
- Three audio connectors on the rear panel (audio line-in connector, audio line-out connector, and microphone connector)
- Two audio connectors on the front panel (microphone connector and headphone connector)

For more information, see “Locating connectors, controls, and indicators on the front of your computer” on page 9 and “Locating connectors on the rear of your computer” on page 10.

Expansion

- One hard disk drive bay
- One optical drive bay
- One secondary solid-state drive bay (optional)
- One slim card reader drive bay
- One PCI Express x16 graphics card slot
- Two PCI Express x1 card slots

Power supply

Your computer comes with one of the following power supplies:

- 180-watt power supply with a manual voltage-selection switch

Security features

- Computrace Agent software embedded in firmware
- Ability to enable or disable a device
- Ability to enable and disable USB connectors individually
- Power-on password (POP), administrator password, and hard disk drive password to deter unauthorized use of your computer
- Startup sequence control
- Startup without keyboard or mouse
- Support for a Kensington-style cable lock
- Support for a padlock

For more information, see Chapter 4 “Security” on page 29.

Preinstalled software programs

Your computer is preinstalled with software programs to help you work more easily and securely. For more information, see “Lenovo programs” on page 5.

Preinstalled operating system

Your computer is preinstalled with one of the following operating systems:

- Microsoft Windows 7 operating system
- Microsoft Windows 8 operating system
- Microsoft Windows 8.1 operating system

Operating system(s), certified or tested for compatibility[1] (varies by model type)

- Linux®

1. The operating system(s) listed here are being certified or tested for compatibility at the time this publication goes to press. Additional operating systems might be identified by Lenovo as compatible with your computer following the publication of this manual. This list is subject to change. To determine if an operating system has been certified or tested for compatibility, check the Web site of the operating system vendor.

Specifications

This section lists the physical specifications for your computer.

Dimensions

Width: 160 mm (6.3 inches)

Height: 396.5 mm (15.6 inches)

Depth: 399.6 mm (15.7 inches)

Weight

Maximum configuration as shipped: 7.5 kg (16.5 lb) (without package)

Maximum configuration as shipped: 10.5 kg (23.1 lb) (with package)

Environment

- Air temperature:

  Operating: 10°C to 35°C (50°F to 95°F)

  Storage in original shipping package: -40°C to 60°C (-40°F to 140°F)

  Storage without package: -10°C to 60°C (14°F to 140°F)
- Humidity:

  Operating: 20% to 80% (non-condensing)

  Storage: 20% to 90% (non-condensing)
- Altitude:

  Operating: -50 to 10 000 ft (-15.2 to 3048 m)

  Storage: -50 to 35 000 ft (-15.2 to 10 668 m)

Electrical input

- Input voltage:
  - Low range:

    Minimum: 100 V ac

    Maximum: 127 V ac

    Input frequency range: 50 to 60 Hz

    Voltage-selection switch setting: 115 V ac
  - High range:

    Minimum: 200 V ac

    Maximum: 240 V ac

    Input frequency range: 50 to 60 Hz

    Voltage-selection switch setting: 230 V ac

Lenovo programs

Your computer comes with Lenovo programs to help you work more easily and securely. Depending on the Windows operating system preinstalled, the programs might vary.

Accessing Lenovo programs on the Windows 7 operating system

On the Windows 7 operating system, you can access Lenovo programs from either the Lenovo ThinkVantage® Tools program or from Control Panel.

Accessing Lenovo programs from the Lenovo ThinkVantage Tools program

To access Lenovo programs from the Lenovo ThinkVantage Tools program, click **Start → All Programs → Lenovo ThinkVantage Tools**. Then double-click a program icon to access the program.

Note: If a program icon in the Lenovo ThinkVantage Tools program navigation window is dimmed, it indicates that you need to install the program manually. To install the program manually, double-click the program icon. Then, follow the instructions on the screen. When the installation process completes, the program icon will be activated.

Table 1. Programs in the Lenovo ThinkVantage Tools program

Program	Icon name
Communications Utility	Web Conferencing
Fingerprint Software	Fingerprint Reader
Lenovo Solution Center	System Health and Diagnostics
Password Manager	Password Vault
Power Manager	Power Controls
Recovery Media	Factory Recovery Disks
Rescue and Recovery®	Enhanced Backup and Restore
System Update	Update and Drivers
View Management Utility	Screen Layout

Note: Depending on your computer model, some of the programs might not be available.

Accessing Lenovo programs from Control Panel

To access Lenovo programs from Control Panel, click **Start → Control Panel**. Then depending on the program you want to access, click the corresponding section and then click the corresponding green text.

Note: If you do not find the program you need in Control Panel, open the Lenovo ThinkVantage Tools program navigation window and double-click the dimmed icon to install the program you need. Then, follow the instructions on the screen. When the installation process completes, the program icon will be activated, and you can find the program in Control Panel.

The programs and the corresponding sections and green texts in Control Panel are listed in the following table.

Table 2. Programs in Control Panel

Program	Control Panel section	Green text in Control Panel
Communications Utility	Hardware and Sound	Lenovo - Web Conferencing
Fingerprint Software	System and Security Hardware and Sound	Lenovo - Fingerprint Reader
Lenovo Solution Center	System and Security	Lenovo - System Health and Diagnostics
Password Manager	System and Security User Accounts and Family Safety	Lenovo - Password Vault
Power Manager	Hardware and Sound System and Security	Lenovo - Power Controls
Recovery Media	System and Security	Lenovo - Factory Recovery Disks

Table 2. Programs in Control Panel (continued)

Program	Control Panel section	Green text in Control Panel
Rescue and Recovery	System and Security	Lenovo - Enhanced Backup and Restore
System Update	System and Security	Lenovo - Update and Drivers
View Management Utility	System and Security	Lenovo View Management Utility

Note: Depending on your computer model, some of the programs might not be available.

Accessing Lenovo programs on the Windows 8 or Windows 8.1 operating system

If your computer is preinstalled with the Windows 8 or Windows 8.1 operating system, you can access Lenovo programs by doing one of the following:

- On the Windows 8 operating system, press the Windows key to go to the Start screen. Click a Lenovo program to launch it. If you cannot find the program you need, move the pointer to the bottom-right corner of the screen to display the charms. Then click the **Search** charm to search for the desired program.
- On the Windows 8.1 operating system, press the Windows key to go to the Start screen. Click a Lenovo program to launch it. If you cannot find the program you need, click the arrow icon in the bottom-left corner of the screen to go to the Apps screen. Find the desired program in the apps list or search for it in the search box in the top-right corner of the screen.

Depending on your computer model, your computer supports some of the following Lenovo programs:

- Fingerprint Software
- Lenovo Cloud Storage
- Lenovo Companion
- Lenovo Reach
- Lenovo Solution Center
- Lenovo Support
- Password Manager
- System Update

An introduction to Lenovo programs

This topic provides a brief introduction to some Lenovo programs.

Note: Depending on your computer model, some of the programs might not be available.

- **Communications Utility**

  The Communications Utility program provides a central location for integrated camera and microphone settings. It controls advanced settings for the integrated microphone and camera to optimize Web conferencing and Voice over IP (VOIP) experience.

- **Fingerprint Software**

  The integrated fingerprint reader provided on some keyboards enables you to enroll your fingerprint and associate it with your power-on password, hard disk password, and Windows password. As a result, fingerprint authentication can replace passwords and enable simple and secure user access. A fingerprint reader keyboard is available with select computers or can be purchased for computers that support this option.

- **Lenovo Cloud Storage**

  The Lenovo Cloud Storage program is a cloud storage solution that enables you to store your files, such as documents and pictures, on a server. You can access the stored files through the Internet from different devices such as personal computers, smart phones, or tablets. For more information about the Lenovo Cloud Storage program, go to http://www.lenovo.com/cloud.

- **Lenovo Companion**

  Through the Lenovo Companion program, you can get the information about the accessories for your computer, view bolgs and articles about your computer, and check for other recommended programs.

- **Lenovo Reach**

  Use the Lenovo Reach program to enhance your cloud experience. Lenovo Reach keeps you connected at all times and enables you to access all your favorite items from personal computers, smartphones, or tablets. With Lenovo Reach, you can add your favorite Web services to your cloud desktop; stay logged in to Web sites with the cloud password manager; and access, edit, and share your files from anywhere.

- **Lenovo Solution Center**

  The Lenovo Solution Center program enables you to troubleshoot and resolve computer problems. It combines diagnostic tests, system information collection, security status, and support information, along with hints and tips for maximum system performance.

- **Lenovo Support**

  The Lenovo Support program enables you to register your computer with Lenovo, check the computer health condition and battery status, download and view user manuals for your computer, get the warranty information of your computer, and explore help and support information.

- **Lenovo ThinkVantage Tools**

  The Lenovo ThinkVantage Tools program guides you to a host of information sources and provides easy access to various tools to help you work more easily and securely.

- **Lenovo Welcome**

  The Lenovo Welcome program introduces you to some innovative built-in features of Lenovo and guides you through a few important setup tasks to help you make the most of your computer.

- **Password Manager**

  The Password Manager program automatically captures and fills in authentication information for Windows programs and Web sites.

- **Power Manager**

  The Power Manager program provides convenient, flexible, and complete power management for your computer. It enables you to adjust your computer power settings to achieve the best balance between performance and power saving.

- **Recovery Media**

  The Recovery Media program enables you to restore the contents of the hard disk drive to the factory default settings.

- **Rescue and Recovery**

  The Rescue and Recovery program is a one-button recovery and restore solution that includes a set of self-recovery tools to help you diagnose computer problems, get help, and recover from system crashes, even if you cannot start the Windows operating system.

- **System Update**

  The System Update program helps you keep the software on your computer up-to-date by downloading and installing software update packages (Lenovo programs, device drivers, UEFI BIOS updates, and other third party programs).

- **View Management Utility**

The View Management Utility program enables you to easily organize your open windows. It divides your screen into multiple parts and then resizes and positions open windows into different parts to make the best use of your desktop. The program also is able to work across multiple monitors to improve your productivity.

Locations

This section provides information to help you locate the connectors on the front and rear of your computer, parts on the system board, and components and internal drives in your computer.

Locating connectors, controls, and indicators on the front of your computer

Figure 1 “Front connector, control, and indicator locations” on page 9 shows the locations of the connectors, controls, and indicators on the front of your computer.

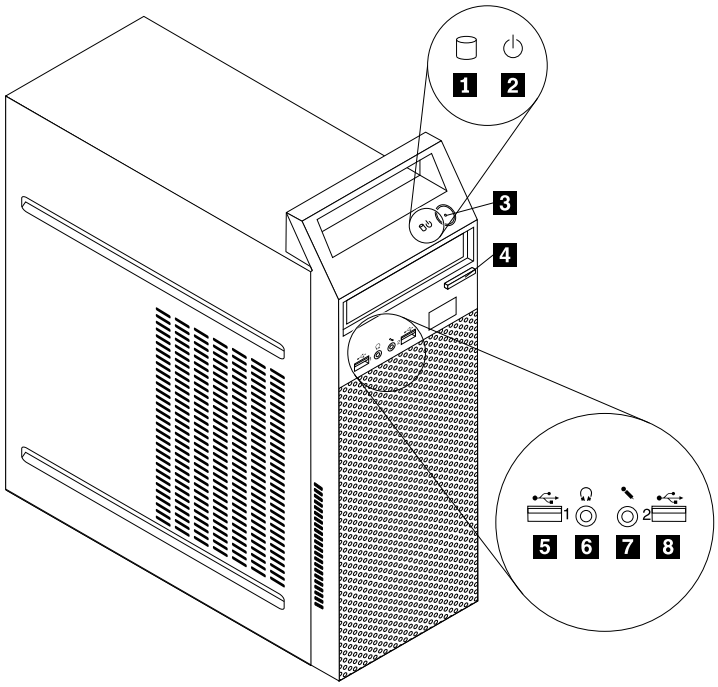

Figure 1. Front connector, control, and indicator locations

1 Hard disk drive activity indicator

2 Power indicator

3 Power switch

4 Optical drive eject/close button

5 USB 2.0 connector (USB port 1)

6 Headphone connector

7 Microphone connector

8 USB 2.0 connector (USB port 2)

Locating connectors on the rear of your computer

Figure 2 “Rear connector locations” on page 10 shows the locations of the connectors on the rear of your computer. Some connectors on the rear of your computer are color-coded to help you determine where to connect the cables on your computer.

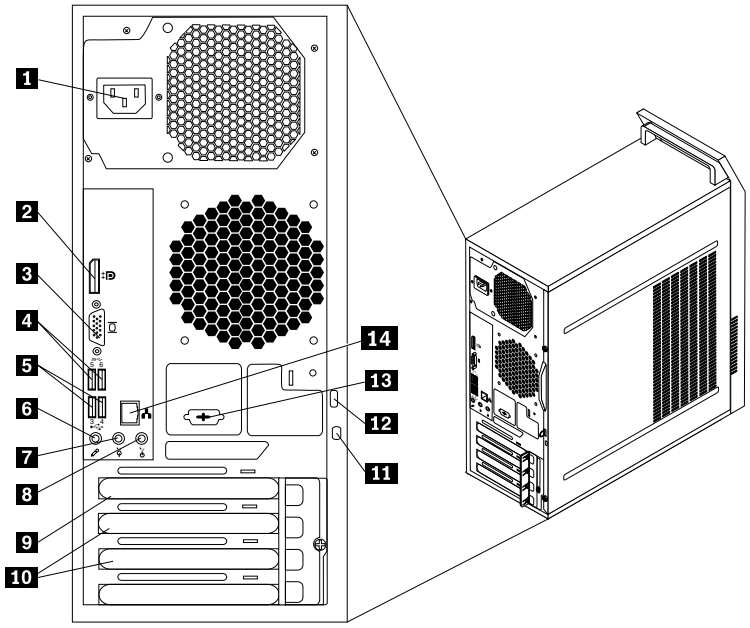

Figure 2. Rear connector locations

1 Power cord connector
2 DisplayPort connector
3 VGA monitor connector
4 USB 3.0 connectors
5 USB 2.0 connectors
6 Microphone connector
7 Audio line-out connector
8 Audio line-in connector
9 PCI Express x16 graphics card slot
10 PCI Express x1 card slots (2)
11 Security-lock slot
12 Padlock loop
13 Optional serial port
14 Ethernet connector

Connector	Description
Audio line-in connector	Used to receive audio signals from an external audio device, such as a stereo system. When you attach an external audio device, a cable is connected between the audio line-out connector of the device and the audio line-in connector of the computer.
Audio line-out connector	Used to send audio signals from the computer to external devices, such as powered stereo speakers (speakers with built-in amplifiers), headphones, multimedia keyboards, or the audio line-in connector on a stereo system or other external recording device.
DisplayPort connector	Used to attach a high-performance monitor, a direct-drive monitor, or other devices that use a DisplayPort connector.
Ethernet connector	Used to attach an Ethernet cable for a local area network (LAN). **Note:** To operate the computer within FCC Class B limits, use a Category 5 Ethernet cable.

Connector	Description
Microphone connector	Used to attach a microphone to your computer when you want to record sound or if you use speech-recognition software.
USB 2.0 connector	Used to attach a device that requires a USB 2.0 connection, such as a keyboard, a mouse, a scanner, a printer, or a personal digital assistant (PDA).
USB 3.0 connector	Used to attach a device that requires a USB 2.0 or 3.0 connection, such as a keyboard, a mouse, a scanner, a printer, or a personal digital assistant (PDA). A USB 3.0 connector provides high transmission speeds to reduce the time that is required for data transmission.
VGA monitor connector	Used to attach a VGA monitor or other devices that use a VGA monitor connector.

Locating components

Figure 3 “Component locations” on page 11 shows the locations of the various components in your computer. To remove the computer cover, see “Removing the computer cover” on page 36.

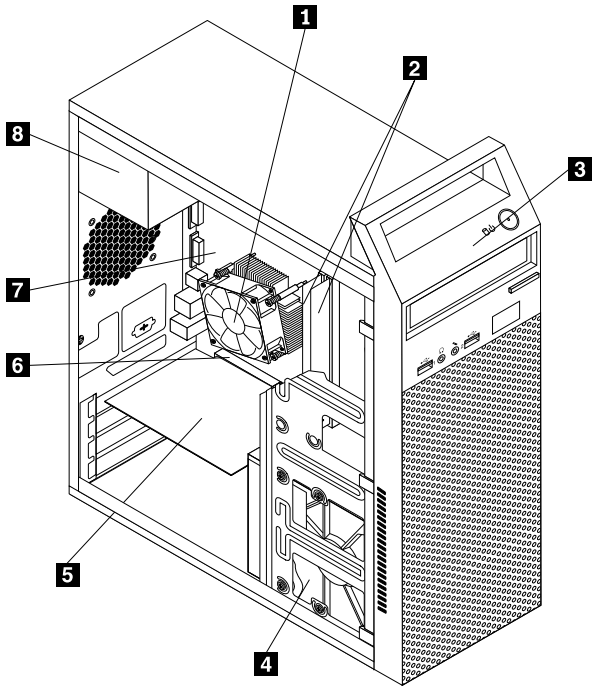

Figure 3. Component locations

1 Heat sink and fan assembly
2 Memory modules (2)
3 Front bezel
4 Hard disk drive
5 PCI Express card (installed in some models)
6 PCI Express x16 graphics card slot
7 System board
8 Power supply assembly

Locating parts on the system board

Figure 4 “System board part locations” on page 12 shows the locations of the parts on the system board.

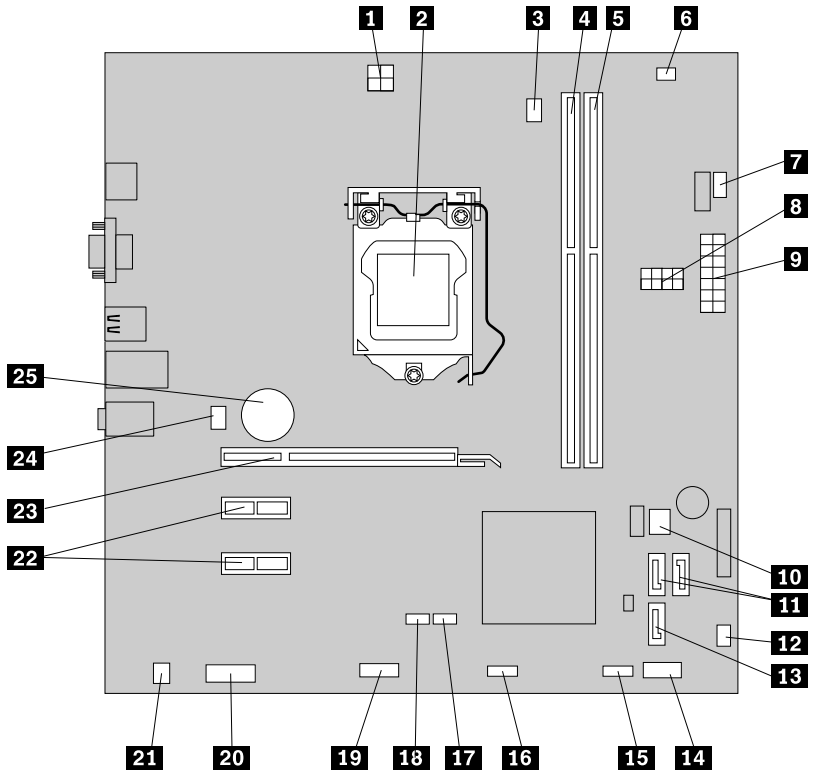

Figure 4. System board part locations

1 4-pin power connector

2 Microprocessor

3 Microprocessor fan connector

4 Memory slot 1 (DIMM1)

5 Memory slot 2 (DIMM2)

6 Thermal sensor connector

7 Power fan connector

8 Hard disk drive/ Optical drive power connectors

9 24-pin power connector

10 BIOS ROM

11 SATA 3.0 connectors

12 Power supply fan connector

13 SATA 2.0 connector

14 Front panel connector (for connecting LED indicators and the power switch)

15 Front USB connector 1 (for connecting USB ports 1 and 2 on the front bezel)

16 Front USB connector 2 (for connecting an additional USB device)

17 Clear CMOS (Complementary Metal Oxide Semiconductor) /Recovery jumper

18 Clear CMOS /Recovery jumper

19 Serial (COM2) connector

20 Front audio connector

21 Internal speaker connector

22 PCI Express x1 card slots (2)

23 PCI Express x16 graphics card slot

24 System fan connector

25 Battery

Locating internal drives

Internal drives are devices that your computer uses to read and store data. You can add drives to your computer to increase storage capacity and enable your computer to read other types of media. Internal drives are installed in bays. In this manual, the bays are referred to as bay 1, bay 2, and so on.

When installing or replacing an internal drive, it is important to note the type and size of the drive that you can install or replace in each bay and correctly connect the cables to the drive installed. Refer to the appropriate section in “Installing or replacing hardware” on page 35 for instructions on how to install or replace internal drives for your computer.

Figure 5 “Drive bay locations” on page 13 shows the locations of the drive bays.

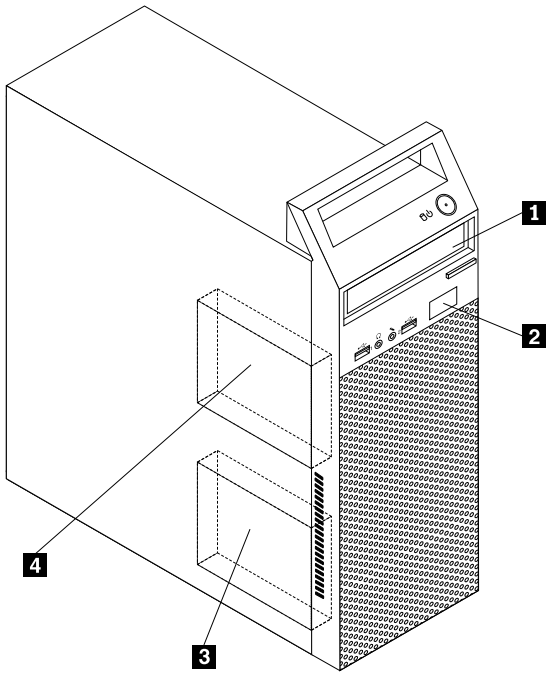

Figure 5. Drive bay locations

1 Bay 1 - Optical drive bay (with an optical drive installed on some models)

2 Bay 2 - Slim card reader drive bay

3 Bay 3 - Primary hard disk drive bay (with a 3.5-inch SATA hard disk drive installed)

4 Bay 4 - Secondary hard disk drive bay (with a SATA solid-state drive or a hybrid hard disk drive installed in some models)

Machine type and model label

The machine type and model label identifies your computer. When you contact Lenovo for help, the machine type and model information helps support technicians to identify your computer and provide faster service.

The following is a sample of the machine type and model label.

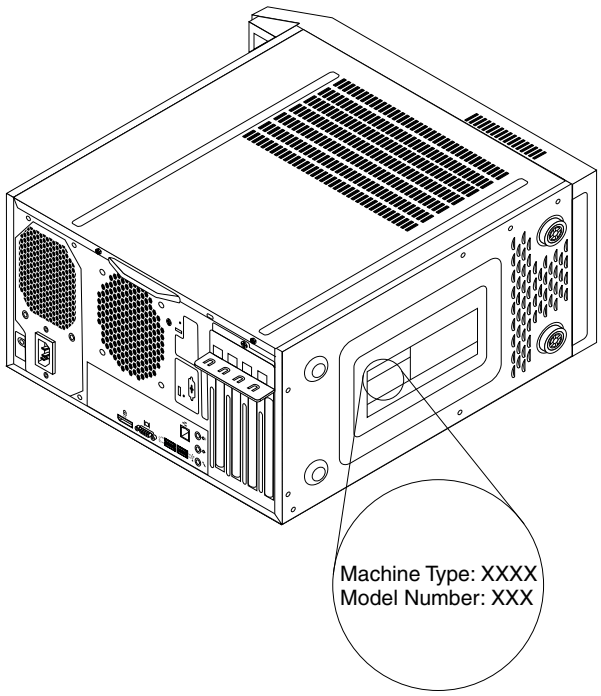

Figure 6. Machine type and model label

Chapter 2. Using your computer

This chapter provides information on using some of the computer components.

Frequently asked questions

The following are a few tips that will help you optimize the use of your computer.

Can I get my user guide in another language?

The user guide is available in various languages on the Lenovo Support Web site at:
http://www.lenovo.com/UserManuals

Where are my recovery discs?

Lenovo provides a program that enables you to create recovery discs. For details about creating recovery discs, see “Creating recovery media” on page 70.

Additionally, in case of a hard disk failure, you can order Product Recovery discs from the Lenovo Customer Support Center. For information about contacting the Customer Support Center, see Chapter 11 “Getting information, help, and service” on page 111. Before using the Product Recovery discs, refer to the documentation that comes with the discs.

Attention: A Product Recovery disc package might contain multiple discs. Make sure you have all of the discs ready before starting the recovery process. During the recovery process, you might be prompted to change discs.

Where can I find help about the Windows operating system?

The Windows Help and Support information system provides you with detailed information about using the Windows operating system to help you get the most of your computer. To access the Windows Help and Support information system, do one of the following:

- On the Windows 7 operating system, click **Start → Help and Support**.
- On the Windows 8 or Windows 8.1 operating system, move your pointer to the top-right or bottom-right corner of the screen to display the charms. Then click **Settings → Help**. Additionally, the Windows 8.1 operating system provides a **Help+Tips** application that you can open from the Start screen or Apps screen.

Can I change the Windows 8.1 startup behavior to open either the desktop or the Start screen?

On the Windows 8.1 operating system, you can set the computer to open either the desktop or the Start screen by default. To set the default startup screen, do the following:

1. On the desktop, move your pointer to the taskbar at the bottom of the screen and right-click on the taskbar.
2. Click **Properties**. The Taskbar and Navigation properties window is displayed.
3. On the **Navigation** tab, locate the **Start screen** section, and then do one of the following:
   - To set the desktop as your default startup screen, select **When I sign in or close all apps on a screen, go to the desktop instead of Start** so a check is visible.
   - To set the Start screen as your default startup screen, remove the check from the **When I sign in or close all apps on the screen, go to desktop instead of Start** checkbox.
4. Click **OK** to save the new setting.

This feature is not available on the Windows 8 operating system.

© Copyright Lenovo 2013

Navigating among screens on the Windows 8 and Windows 8.1 operating systems

This section provides instructions on how to navigate among the desktop, the Start screen, and applications that were opened from the Start screen on the Windows 8 and Windows 8.1 operating systems. For detailed instructions, see “Navigating on Windows 8” on page 16 or “Navigating on Windows 8.1” on page 17.

Navigating on Windows 8

To navigate among the desktop, the Start screen, and applications that were opened from the Start screen on the Windows 8 operating system, do one of the following:

- From the Start screen, do one of the following to navigate to the most recently accessed workspace (application, PC settings, or desktop):
  - Using a pointing device: Move the pointer to the extreme bottom-left corner of the screen until a small representation of the workspace is displayed; then click the representation.
  - Using a touch screen: Swipe in and out on the left edge of the screen. Representations of all available workspaces are displayed along the left edge of the screen. Tap the representation of the workspace at the bottom.

    Note: The representation of a workspace is displayed only if you have at least one active workspace in the background of the system.
- From the desktop or any other workspace that is opened from the Start screen, do one of the following to navigate to the Start screen:
  - Using a pointing device: Move the pointer to the extreme bottom-left corner of the screen until a small representation of the Start screen is displayed; then click the representation.
  - Using a touch screen: Do one of the following:
    - Swipe in and out on the left edge of the screen. Representations of all available workspaces are displayed along the left edge of the screen. Tap the representation of the Start screen at the bottom.
    - Swipe in from the right edge of the screen to display the charms; then tap **Start**.
- From any workspace (Start screen, desktop, PC settings, or application opened from the Start screen), use any of the following procedures to go to another workspace that you have previously opened:
  - To navigate to a previously accessed workspace (application, PC settings, or desktop), do one of the following:
    - Using a pointing device:
      1. Do one of the following:
         - Move the pointer to the extreme top-left corner of the screen and then move the pointer downward along the left edge of the screen.
         - Move the pointer to the extreme bottom-left corner of the screen and then move the pointer upward along the left edge of the screen.

         Representations of all available workspaces are displayed along the left edge of the screen.

         Note: Only active workspaces that you have accessed during the current Windows session are displayed along the left edge. If you close an active workspace, its representation does not display along the left edge of the screen.
      2. Click the representation.
    - Using a touch screen:
      - Method 1

1. Swipe in and out on the left edge of the screen. Representations of all available workspaces are displayed along the left edge of the screen.
2. Tap the desired workspace.

- Method 2
  1. Swipe in from the left edge of the screen to navigate to the next available workspace.
  2. Repeat step 1 until you navigate to the desired workspace.

– To navigate to the most recently accessed workspace (application, PC settings, or desktop), do one of the following:

  – Using a pointing device: Move the pointer to the extreme top-left corner of the screen until a small representation of the workspace is displayed; then click the representation.
  – Using a touch screen: Swipe in from the left edge of the screen.

For information about using other features of the Windows 8 operating system, refer to the Windows Help and Support information system. For more information, see “Help and Support” on page 111.

Navigating on Windows 8.1

To navigate among the desktop, the Start screen, and applications that were opened from the Start screen on the Windows 8.1 operating system, do one of the following:

- From the Start screen, do one of the following to navigate to the most recently accessed workspace (application, setting, or desktop):
  – Using a pointing device: Move the pointer to the extreme bottom-left corner of the screen until the Windows screen-control icon is displayed; then click the icon.
  – Using a touch screen: Swipe in and out on the left edge of the screen. Representations of all available workspaces are displayed along the left edge of the screen. Tap the Windows screen-control icon at the bottom.

    Note: The Windows screen-control icon is displayed only if you have at least one active workspace in the background of the system.
- From the desktop or any other workspace that is opened from the Start screen, do one of the following to navigate to the Start screen:
  – Using a pointing device:
    – From the desktop, click the Windows screen-control icon in the bottom-left corner of the screen.
    – From any other workspace, move the pointer to the extreme bottom-left corner of the screen until the Windows screen-control icon is displayed; then click the icon.
  – Using a touch screen: Do one of the following:
    – From the desktop, tap the Windows screen-control icon in the bottom-left corner of the screen.
    – From any other workspace, do one of the following:
      - Swipe in and out on the left edge of the screen. Representations of all available workspaces are displayed along the left edge of the screen. Tap the Windows screen-control icon at the bottom.
      - Swipe in from the right edge of the screen to display the charms; then tap **Start**.
- From any workspace (Start screen, desktop, PC settings, or application opened from the Start screen), use any of the following procedures to go to another workspace that you have previously opened:
  – To navigate to a previously accessed workspace (application, setting, or desktop), do one of the following:

- Using a pointing device:
  1. Do one of the following:
     - Move the pointer to the extreme top-left corner of the screen and then move the pointer downward along the left edge of the screen.
     - Move the pointer to the extreme bottom-left corner of the screen and then move the pointer upward along the left edge of the screen.

     Representations of all available workspaces are displayed along the left edge of the screen.

     Note: Only active workspaces that you have accessed during the current Windows session are displayed along the left edge. If you close an active workspace, its representation does not display along the left edge of the screen.
  2. Click the representation.
- Using a touch screen:
  - Method 1
    1. Swipe in and out on the left edge of the screen. Representations of all available workspaces are displayed along the left edge of the screen.
    2. Tap the desired workspace.
  - Method 2
    1. Swipe in from the left edge of the screen to navigate to the next available workspace.
    2. Repeat step 1 until you navigate to the desired workspace.

- To navigate to the most recently accessed workspace (application, PC settings, or desktop), do one of the following:
  - Using a pointing device: Move the pointer to the extreme top-left corner of the screen until the Windows screen-control icon is displayed; then click the icon.
  - Using a touch screen: Swipe in from the left edge of the screen.

For information about using other features of the Windows 8.1 operating system, open the **Help+Tips** application from the Start screen or Apps screen, or refer to the Windows Help and Support information system. For more information, see “Help and Support” on page 111.

Accessing Control Panel on the Windows 8 or Windows 8.1 operating system

On the Windows operating system, you can view and change computer settings through Control Panel. To access Control Panel on the Windows 8 or Windows 8.1 operating system, do one of the following:

- From the desktop
  1. Move the pointer to the top-right or bottom-right corner of the screen to display the charms.
  2. Click **Settings**.
  3. Click **Control Panel**.
- From the Start screen
  - For Windows 8:
    1. Move the pointer to the top-right or bottom-right corner of the screen to display the charms.
    2. Click **Search**.
    3. On the Apps screen, scroll to the right side, and click **Control Panel** in the **Windows System** section.

– For Windows 8.1:
  1. Click the arrow icon in the bottom-left corner of the screen to go to the Apps screen.
  2. Scroll to the right side, and click **Control Panel** in the **Windows System** section.

Using the keyboard

Depending on your model, your computer comes with either a standard keyboard or a fingerprint reader keyboard. The Microsoft Windows shortcut keys are provided on both keyboard types.

This section provides information about the following topics:

- "Using Windows shortcut keys" on page 19
- "Using a fingerprint reader" on page 19

Using Windows shortcut keys

Both the standard keyboard and the fingerprint reader keyboard provide three keys you can use with your Microsoft Windows operating system.

- The two Windows logo keys are located beside the Alt key on either side of the spacebar. They feature the Windows logo. On the Windows 7 operating system, press the Windows key to open the **Start** menu. On the Windows 8 or Windows 8.1 operating system, press the Windows key to switch between the current workspace and the Start screen. The style of the Windows logo varies depending on the keyboard type.
- The context-menu key is located next to the Ctrl key on the right side of the Spacebar. Pressing the context-menu key opens the context menu for the active program, icon, or object.

Note: You can use the mouse or the Up and Down arrow keys to highlight menu selections. On the Windows 7 operating system, you can close the **Start** menu or the context menu by clicking the mouse or pressing Esc.

Using a fingerprint reader

Some computers might come with a keyboard that has a fingerprint reader. For more information about the fingerprint reader, see "An introduction to Lenovo programs" on page 7.

To open the ThinkVantage Fingerprint Software program and use the fingerprint reader, see "Lenovo programs" on page 5.

Follow the instructions on the screen. For additional information, refer to the ThinkVantage Fingerprint Software help system.

Using the wheel mouse

The wheel mouse has the following controls:

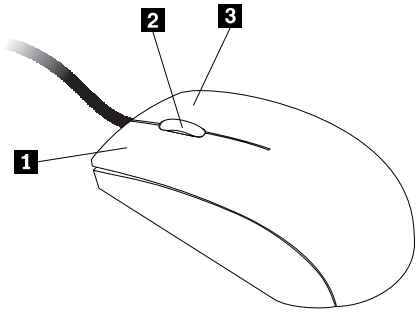

1 Primary mouse button	Use this button to select or start a program or menu item.
2 Wheel	Use the wheel to control the scrolling action of the mouse. The direction in which you rotate the wheel controls the direction of the scrolling action.
3 Secondary mouse button	Use this button to display a menu for the active program, icon, or object.

You can switch the function of the primary and secondary mouse buttons and change other default behavior through the mouse properties function in the Windows Control Panel.

Adjusting audio

Sound is an important part of the computer experience. Your computer has a digital audio controller built into the system board. Some models also have a high-performance audio adapter installed in one of the PCI Express card slots.

About your computer audio

If a factory-installed, high-performance audio adapter is installed in your computer, the system-board audio connectors on the rear of the computer are typically disabled; use the connectors provided on the audio adapter.

Each audio solution provides at least three audio connectors: audio line-in connector, audio line-out connector, and Microphone connector. On some models, a fourth connector is provided for the attachment of unpowered stereo speakers (speakers that do not require an ac power source). The audio adapter provides you with the ability to record and play back sound and music, as well as to enjoy sound with multimedia applications and work with speech-recognition software.

Optionally, you can connect a set of powered stereo speakers to the audio line-out connector to enjoy better sound with multimedia applications.

Setting the volume from the desktop

The desktop volume control is accessible through the volume icon in the taskbar, which is at the bottom-right corner of the Windows desktop. Click the volume icon and move the slider up or down to control the volume, or click the **Mute** icon to turn off the audio. If the volume icon is not in the taskbar, see “Adding the volume icon to the taskbar” on page 20.

Adding the volume icon to the taskbar

To add the volume icon to the taskbar on the Windows 7 operating system, do the following:

1. From the Windows desktop, click **Start → Control Panel → Appearance and Personalization**.
2. In the **Taskbar and Start Menu** section, click **Customize icons on the taskbar**.
3. Click **Turn system icons on or off** and change the volume behaviors from **Off** to **On**.
4. Click **OK** to save the new settings.

To add the volume icon to the taskbar on the Windows 8 or Windows 8.1 operating system, do the following:

1. Open Control Panel, and click **Appearance and Personalization**.

   Note: For detailed information on how to open Control Panel on Windows 8 and Windows 8.1, see "Accessing Control Panel on the Windows 8 or Windows 8.1 operating system" on page 18.
2. Do one of the following:
   - For Windows 8:

     In the **Taskbar** section, click **Customize icons on the taskbar**.
   - For Windows 8.1:

     In the **Taskbar and Navigation** section, click **Customize icons on the taskbar**.
3. Click **Turn system icons on or off** and change the volume behavior from **Off** to **On**.
4. Click **OK** to save the new settings.

Setting the volume from Control Panel

You can set the computer volume from Control Panel. To set the computer volume from Control Panel, do the following:

1. On the Windows 7 operating system, click **Start → Control Panel → Hardware and Sound**. On the Windows 8 or Windows 8.1 operating system, open Control Panel, and click **Hardware and Sound**.

   Note: For detailed information on how to open Control Panel on Windows 8 and Windows 8.1, see "Accessing Control Panel on the Windows 8 or Windows 8.1 operating system" on page 18.
2. In the **Sound** section, click **Adjust system volume**.
3. Move the sliders up or down to raise or lower the volume of your computer.

Using CDs and DVDs

Your computer might have a DVD ROM drive or recordable DVD drive installed. DVD drives use industry-standard, 12 cm (4.75-inch) CD media or DVD media. If your computer comes with a DVD drive, the drive can read DVD-ROM discs, DVD-R discs, DVD-RAM discs, DVD-RW discs, and all types of CDs, such as CD-ROM discs, CD-RW discs, CD-R discs, and audio CDs. If you have a recordable DVD drive, it can also record on DVD-R discs, DVD-RW discs, type II DVD-RAM discs, CD-RW standard and high speed discs, and CD-R discs.

Follow these guidelines when using the DVD drive:

- Do not place the computer in a location where the drive is exposed to the following:
  - High temperature
  - High humidity
  - Excessive dust
  - Excessive vibration or sudden shock
  - An inclined surface
  - Direct sunlight

- Do not insert any object other than a CD or DVD into the drive.
- Before moving the computer, remove the CD or DVD from the drive.

Handling and storing CD and DVD media

CD and DVD media are durable and reliable, but they do require some care and special handling. When handling and storing a CD or DVD, follow these guidelines:

- Hold the disc by its edges. Do not touch the surface of the side that is not labeled.
- To remove dust or fingerprints, wipe the disc with a clean, soft cloth from the center to the outside. Wiping the disc in a circular direction might cause loss of data.
- Do not write or stick paper on the disc.
- Do not scratch or mark the disc.
- Do not place or store the disc in direct sunlight.
- Do not use benzene, thinners, or other cleaners to clean the disc.
- Do not drop or bend the disc.
- Do not insert damaged discs into the drive. Warped, scratched, or dirty discs can damage the drive.

Playing a CD or DVD

If your computer comes with a DVD drive, you can listen to audio CDs or watch DVD movies. To play a CD or DVD, do the following:

1. Press the Eject/Load button on the DVD drive to open the tray.
2. With the tray fully extended, insert the CD or DVD into the tray. Some DVD drives have a snap hub in the center of the tray. If your drive has a snap hub, support the tray with one hand and then push the center of the CD or DVD until it snaps into place.
3. Press the Eject/Load button again or gently push the tray forward to close the tray. The CD or DVD player program starts automatically. For additional information, refer to the CD or DVD player program help system.

To remove a CD or DVD from the DVD drive, do the following:

1. With the computer on, press the Eject/Load button. When the tray slides out automatically, carefully remove the disc.
2. Close the tray by pressing the Eject/Load button or by gently pushing the tray forward.

Note: If the tray does not slide out of the drive when you press the Eject/Load button, insert a straightened paper clip into the emergency-eject hole on the front of the DVD drive. Be sure that the drive is powered off when using the emergency eject. Use the Eject/Load button instead of the emergency eject except in an emergency.

Recording a CD or DVD

If your computer comes with a recordable DVD drive, you can use the drive to record CDs or DVDs.

To record a CD or DVD, do one of the following:

- On the Windows 7 operating system, you have either the Corel DVD MovieFactory Lenovo Edition program or the Power2Go program installed on your computer.
  - To run the Corel DVD MovieFactory Lenovo Edition program, click **Start → All Programs → Corel DVD MovieFactory Lenovo Edition → Corel DVD MovieFactory Lenovo Edition**. Follow the instructions on the screen.

- To run the Power2Go program, click **Start** ➙ **All Programs** ➙ **PowerDVD Create** ➙ **Power2Go**. Follow the instructions on the screen.

- On the Windows 8 operating system, run the Power2Go program by doing the following:
  1. Move the pointer to the top-right or bottom-right corner of the screen to display the charms. Then click **Search** and type `Power2Go`.
  2. Click **Power2Go** in the left panel to open the program.
  3. Follow the instructions on the screen.
- On the Windows 8.1 operating system, run the Power2Go program by doing the following:
  1. On the start screen, click the arrow icon  in the bottom-left corner to go to the Apps screen. Then type `Power2Go` in the search box in the top-right corner of the screen..
  2. Click **Power2Go** in the search result to open the program.
  3. Follow the instructions on the screen.

You also can use Windows Media® Player to record CDs and data DVDs. For more information, see “Help and Support” on page 111.

Chapter 3. You and your computer

This chapter provides information about accessibility, comfort, and relocating your computer to other countries or regions.

Accessibility and comfort

Good ergonomic practice is important to get the most from your personal computer and to avoid discomfort. Arrange your workplace and the equipment you use to suit your individual needs and the kind of work that you perform. In addition, use healthy work habits to maximize your performance and comfort while using your computer.

The following topics provide information about arranging your work area, setting up your computer equipment, and establishing healthy work habits.

Lenovo is committed to providing people with disabilities greater access to information and technology. As a result, the following information provides ways to help users that have hearing, vision, and mobility limitations get the most out of their computer experience.

Assistive technologies enable users to access information in the most appropriate way. Some of these technologies are already provided in your operating system, others can be purchased through vendors, or accessed through the World Wide Web:
http://www.lenovo.com/healthycomputing

Arranging your workspace

To get the most from your computer, arrange both the equipment you use and your work area to suit your needs and the kind of work you do. Your comfort is of foremost importance, but light sources, air circulation, and the location of electrical outlets can also affect the way you arrange your workspace.

Comfort

Although no single working position is ideal for everyone, here are a few guidelines to help you find a position that suits you best.

Sitting in the same position for a long time can cause fatigue. The backrest and seat of your chair should adjust independently and provide good support. The seat should have a curved front to relieve pressure on the thighs. Adjust the seat so that your thighs are parallel to the floor and your feet are either flat on the floor or on a footrest.

When using the keyboard, keep your forearms parallel to the floor and your wrists in a comfortable position. Use a light touch on the keyboard and your hands and fingers relaxed. Change the angle of the keyboard for maximum comfort by adjusting the position of the keyboard feet.

© Copyright Lenovo 2013

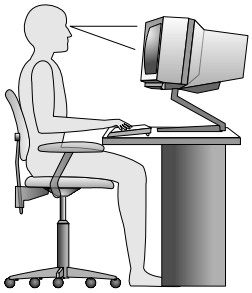

Adjust the monitor so the top of the screen is at, or slightly below, eye level. Place the monitor at a comfortable viewing distance, usually 51 to 61 cm (20 to 24 inches), and position it so you can view it without having to twist your body. Also, position other equipment you use regularly, such as the telephone or a mouse, within easy reach.

Glare and lighting

Position the monitor to minimize glare and reflections from overhead lights, windows, and other light sources. Reflected light from shiny surfaces can cause annoying reflections on your monitor screen. Place the monitor at right angles to windows and other light sources, when possible. Reduce overhead lighting, if necessary, by turning off lights or using lower wattage bulbs. If you install the monitor near a window, use curtains or blinds to block the sunlight. You can adjust the brightness and contrast controls on the monitor as the room lighting changes throughout the day.

Where it is impossible to avoid reflections or to adjust the lighting, an antiglare filter placed over the screen might be helpful. However, these filters might affect the clarity of the image on the screen; try them only after you have exhausted other methods of reducing glare.

Dust buildup compounds problems associated with glare. Remember to clean your monitor screen periodically using a soft cloth as directed in your monitor documentation.

Air circulation

Your computer and monitor produce heat. The computer has a fan that pulls in fresh air and forces out hot air. The monitor lets hot air escape through vents. Blocking the air vents can cause overheating, which might result in a malfunction or damage. Place the computer and monitor so that nothing blocks the air vents; usually, 51 mm (2 inches) of air space is sufficient. Also, make sure that the vented air is not blowing on people.

Electrical outlets and cable lengths

The location of electrical outlets, the length of power cords and cables that connect to the monitor, printer, and other devices might determine the final placement of your computer.

When arranging your workspace:

- Avoid the use of extension cords. When possible, plug the computer power cord directly into an electrical outlet.
- Keep power cords and cables neatly routed away from walkways and other areas where they might get kicked accidentally.

For more information about power cords, see “Power cords and power adapters” on page vi.

Registering your computer

When you register your computer, information is entered into a database, which enables Lenovo to contact you in case of a recall or other severe problem. After you register your computer with Lenovo, you will receive quicker service when you call Lenovo for help. In addition, some locations offer extended privileges and services to registered users.

To register your computer with Lenovo, do one of the following:

- Go to http://www.lenovo.com/register and follow the instructions on the screen to register your computer.
- Connect your computer to the Internet and register your computer through a preinstalled registration program:
  - For Windows 7: The preinstalled Lenovo Product Registration program launches automatically after you have used your computer for a time. Follow the instructions on the screen to register your computer.
  - For Windows 8 or Windows 8.1: On the Start screen, open the Lenovo Support program. Then click **Registration** and follow the instructions on the screen to register your computer.

Moving your computer to another country or region

When you move your computer to another country or region, you must take local electrical standards into consideration. This section provides information on the following:

- "Voltage-selection switch" on page 27
- "Replacement power cords" on page 28

Voltage-selection switch

Some computers are equipped with a voltage-selection switch located near the power-cord connection point on the computer and some computers do not have a voltage-selection switch. Before you install your computer or relocate your computer to another country or region, you must be certain that you have matched your computer to the voltage available at your electrical outlet.

CAUTION:
You must know the voltage of the electrical connection (outlet) where your computer will be connected. If you do not know the voltage, contact your local electric company or refer to official Web sites or other literature for travelers to the country or region where you are located.

If your computer has a voltage-selection switch, you must set the switch to match the voltage available at your electrical outlet. Setting the voltage-selection switch incorrectly will cause the computer to malfunction and might cause permanent damage to the computer. Do not connect the computer to an electrical outlet until you have verified that the voltage-selection switch setting matches the voltage available at the electrical outlets.

If your computer does not have a voltage-selection switch, inspect the voltage-rating label on the bottom of the computer and note the following:

- If the voltage-rating label shows a range of either "100-127 V" or "200-240 V," you must ensure that the voltage provided at the electrical outlet matches the voltage rating on the computer label. If it does not match, do not attempt to connect the computer to the electrical outlet, unless an external device such as a voltage-converting transformer is used.
- If the voltage-rating label shows a dual range of "100-127 V" and "200-240 V," this signifies that the computer is suitable for worldwide operation and the computer will automatically adjust to the voltage at the electrical outlet regardless of the country or region where the computer is being connected.

Replacement power cords

If you relocate your computer to a country or region that uses an electrical outlet style different from the type you are currently using, you will have to purchase either electrical plug adapters or new power cords. You can order power cords directly from Lenovo.

For power cord information and part numbers, go to:
http://www.lenovo.com/powercordnotice

Chapter 4. Security

This chapter provides information about how to protect your computer from theft and unauthorized use.

Security features

The following security features are available on your computer:

- Computrace Agent software embedded in firmware

  The Computrace Agent software is an IT asset management and computer theft recovery solution. The software detects if changes have been made on the computer, such as hardware, software, or the computer call-in location.

  Note: You might have to purchase a subscription to activate the Computrace Agent software.
- Ability to enable and disable devices and USB connectors

  For more information, see “Enabling or disabling a device” on page 79.
- Integrated fingerprint reader (available on some models)

  Depending on the models of your computer, the keyboard may have an integrated fingerprint reader. By enrolling your fingerprint and associating it with a Power-on Password, a Hard Disk Password, or both passwords beforehand, you can start the computer, log on to the system, and enter the Setup Utility program by swiping your finger over the reader, without typing a password. Thus fingerprint authentication can replace passwords and enable simple and secure user access.
- Startup sequence control

  For more information, see “Selecting or changing the startup device sequence” on page 80.
- Startup without keyboard or mouse

  Your computer is able to log in to the operating system without keyboard or mouse connected.

© Copyright Lenovo 2013

Locking the computer cover

Locking the computer cover helps prevent unauthorized people from gaining access to the inside of your computer. Your computer comes with a padlock loop so that the computer cover cannot be removed when a padlock is installed.

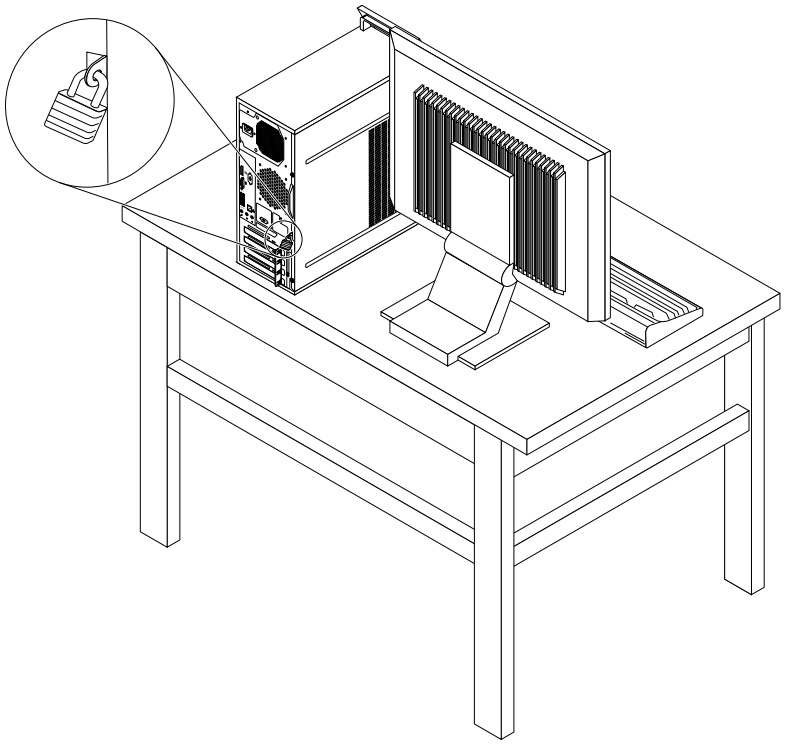

Figure 7. Installing a padlock

Attaching a Kensington-style cable lock

You can use a Kensington-style cable lock to secure your computer to a desk, table, or other non-permanent fixture. The cable lock attaches to the security-lock slot at the rear of your computer and is operated with a key or combination depending on the type selected. The cable lock also locks the buttons used to open the computer cover. This is the same type of lock used with many notebook computers. You can order such a cable lock directly from Lenovo by searching for *Kensington* at:
http://www.lenovo.com/support

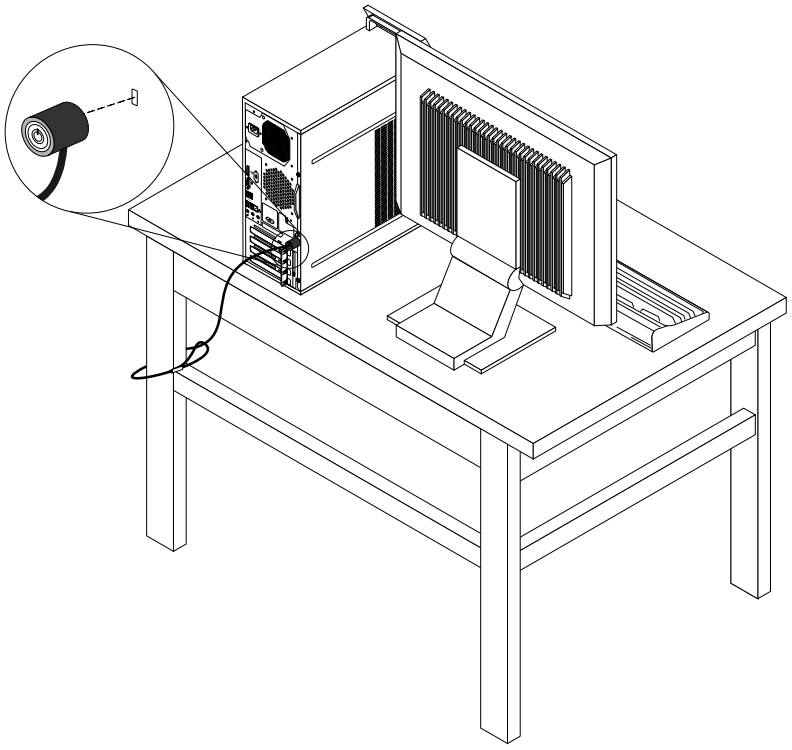

Figure 8. Kensington-style cable lock

Using passwords

You can set a variety of passwords through the Microsoft Windows operating system and through the BIOS of your computer to help deter unauthorized use of your computer.

BIOS passwords

You can use the BIOS Setup Utility program to set passwords to prevent unauthorized access to your computer and data. The following types of passwords are available:

- Power-On Password: When a Power-On Password is set, you are prompted to type a valid password each time the computer is turned on. The computer cannot be used until the valid password is typed in. For more information, see “Power-On Password” on page 78.
- Hard Disk Password: Setting a Hard Disk Password prevents unauthorized access to the data on the hard disk drive. When a Hard Disk Password is set, you are prompted to type a valid password each time you try to access the hard disk drive. For more information, see “Hard Disk Password” on page 78.

- Administrator Password: Setting an Administrator Password deters unauthorized users from changing configuration settings. If you are responsible for maintaining the configuration settings of several computers, you might want to set an Administrator Password. For more information, see “Administrator Password” on page 78.

You do not have to set any passwords to use your computer. However, using passwords improves computing security.

Windows passwords

Depending on your version of the Windows operating system, you can use passwords for a variety of features, including controlling login access, access to shared resources, network access, and individual user settings. For more information, see “Help and Support” on page 111.

Configuring the fingerprint reader

If your keyboard has a fingerprint reader, you can configure the fingerprint reader in the Setup Utility program.

The **Fingerprint Setup** submenu under the **Security** menu of the Setup Utility program provides the following options:

- **Preboot Authentication**: enables or disables the fingerprint authentication for accessing the BIOS.
- **Erasing Fingerprint Data**: clears the fingerprint data stored in a fingerprint reader.

To configure the fingerprint reader, do the following:

1. Start the Setup Utility program. See “Starting the Setup Utility program” on page 77.
2. From the Setup Utility program main menu, select **Security → Fingerprint Setup**, and press Enter. The Fingerprint Setup window opens.
3. Select **Preboot Authentication** or **Erasing Fingerprint Data** as desired, and press Enter.
4. Select the desired settings and press Enter.
5. Press F10 to save changes and exit the Setup Utility program. Press Enter when prompted to confirm the exit.

Using and understanding firewalls

A firewall can be hardware, software, or a combination of both depending on the level of security required. Firewalls work on a set of rules to determine which inbound and outbound connections are authorized. If your computer is preintalled with a firewall program, it helps protect against computer Internet security threats, unauthorized access, intrusions, and Internet attacks. It also protects your privacy. For more information about how to use the firewall program, refer to the help system of your firewall program.

The Windows operating system preinstalled on your computer provides the Windows Firewall. For details on using the Windows Firewall, refer to “Help and Support” on page 111.

Protecting data against viruses

Your computer is preinstalled with an antivirus program to help you guard against, detect, and eliminate viruses.

Lenovo provides a full version of antivirus software on your computer with a free 30-day subscription. After 30 days, you must renew the license to continue receiving the antivirus software updates.

Note: Virus definition files must be kept up-to-date to guard against new viruses.

For more information about how to use your antivirus software, refer to the help system of your antivirus software.

Chapter 5. Installing or replacing hardware

This chapter provides instructions on how to install or replace hardware for your computer.

Handling static-sensitive devices

Do not open the static-protective package containing the new part until the defective part has been removed from the computer and you are ready to install the new part. Static electricity, although harmless to you, can seriously damage computer components and parts.

When you handle parts and other computer components, take these precautions to avoid static-electricity damage:

- Limit your movement. Movement can cause static electricity to build up around you.
- Always handle parts and other computer components carefully. Handle PCI Express cards, memory modules, system boards, and microprocessors by the edges. Never touch any exposed circuitry.
- Prevent others from touching the parts and other computer components.
- Before you replace a new part, touch the static-protective package containing the part to a metal expansion-slot cover or other unpainted metal surface on the computer for at least two seconds. This reduces static electricity from the package and your body.
- When possible, remove the new part from the static-protective packaging, and install it directly in the computer without setting the part down. When this is not possible, place the static-protective package that the part came in on a smooth, level surface and place the part on it.
- Do not place the part on the computer cover or other metal surface.

Installing or replacing hardware

This section provides instructions on how to install or replace hardware for your computer. You can expand the capabilities of your computer and maintain your computer by installing or replacing hardware.

Attention:
Do not open your computer or attempt any repair before reading and understanding the “Important safety information” on page v.

Notes:

1. Use only computer parts provided by Lenovo.
2. When installing or replacing an option, use the appropriate instructions in this section along with the instructions that come with the option.

Installing external options

You can connect external options to your computer, such as external speakers, a printer, or a scanner. For some external options, you must install additional software in addition to making the physical connection. When installing an external option, see “Locating connectors, controls, and indicators on the front of your computer” on page 9 and “Locating connectors on the rear of your computer” on page 10 to identify the required connector. Then, use the instructions that come with the option to help you make the connection and install any software or device drivers that are required for the option.

© Copyright Lenovo 2013

Removing the computer cover

Attention:
Do not open your computer or attempt any repair before reading and understanding the “Important safety information” on page v.

This section provides instructions on how to remove the computer cover.

CAUTION:



Turn off the computer and wait three to five minutes to let the computer cool before removing the computer cover.

To remove the computer cover, do the following:

1. Remove any media from the drives and turn off all attached devices and the computer.
2. Disconnect all power cords from electrical outlets.
3. Disconnect the power cords, Input/Output cables, and any other cables that are connected to the computer. See “Locating connectors, controls, and indicators on the front of your computer” on page 9 and “Locating connectors on the rear of your computer” on page 10.
4. Remove any locking device that secures the computer cover, such as a padlock or a Kensington-style cable lock. See “Locking the computer cover” on page 30 and “Attaching a Kensington-style cable lock” on page 31.
5. Remove the two screws that secure the computer cover and slide the computer cover to the rear to remove it.

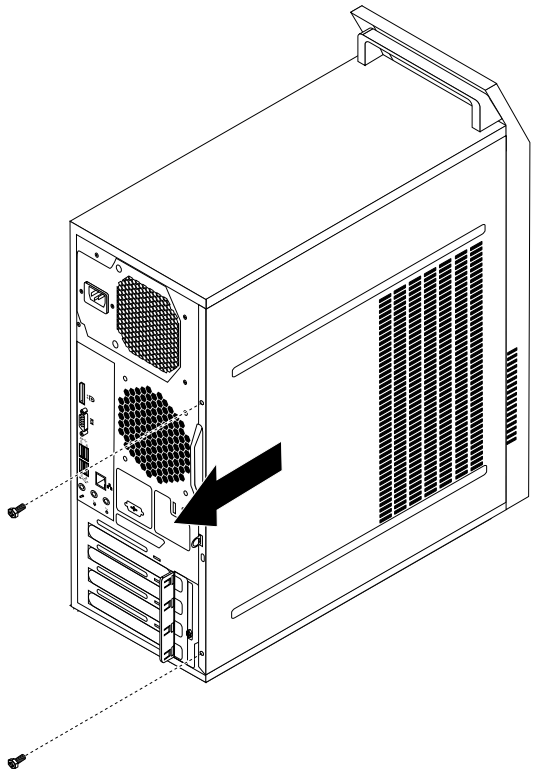

Figure 9. Removing the computer cover

Removing and reinstalling the front bezel

Attention:
Do not open your computer or attempt any repair before reading and understanding the “Important safety information” on page v.

This section provides instructions on how to remove and reinstall the front bezel.

To remove and reinstall the front bezel, do the following:

1. Turn off the computer and disconnect all power cords from electrical outlets.
2. Remove the computer cover. See “Removing the computer cover” on page 36.
3. Remove the front bezel by releasing the three plastic tabs on the left side and pivoting the front bezel outward.

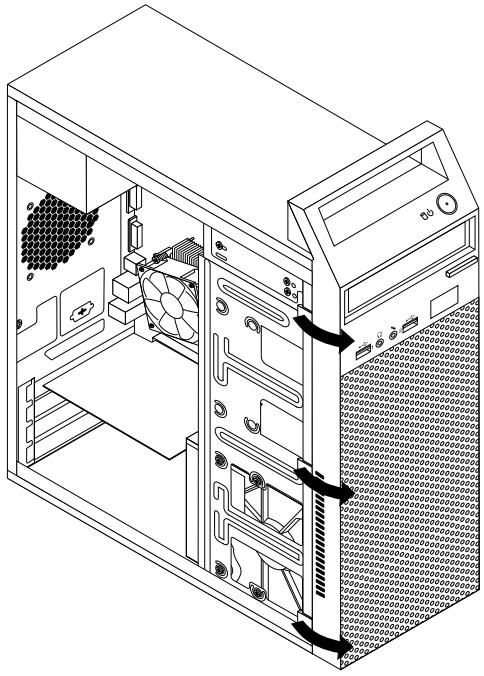

Figure 10. Removing the front bezel

4. To reinstall the front bezel, align the three plastic tabs on the right side of the front bezel with the corresponding holes in the chassis, then pivot the front bezel inwards until it snaps into position on the left side.

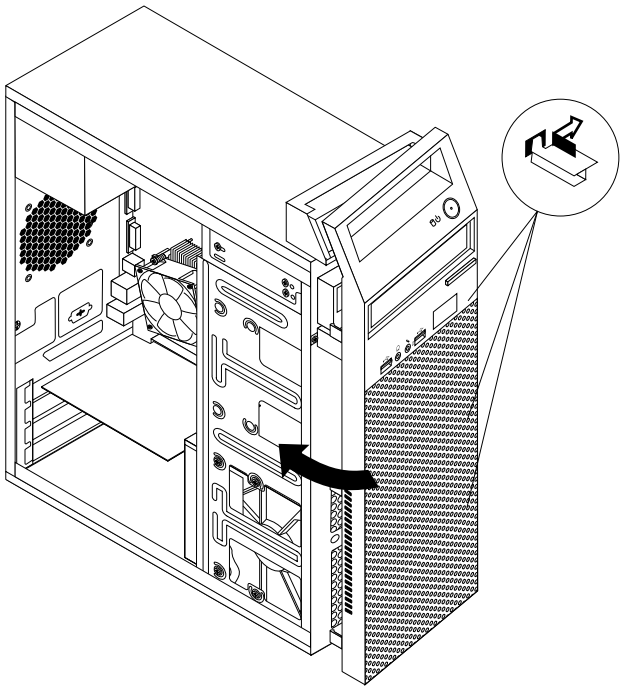

Figure 11. Reinstalling the front bezel

What to do next:

- To work with another piece of hardware, go to the appropriate section.
- To complete the installation or replacement, go to “Completing the parts replacement” on page 67.

Installing or replacing a PCI Express card

Attention:
Do not open your computer or attempt any repair before reading and understanding the “Important safety information” on page v.

This section provides instructions on how to install or replace a PCI Express card. Your computer has two PCI Express x1 card slots and one PCI Express x16 graphics card slot.

To install or replace a PCI Express card, do the following:

1. Turn off the computer and disconnect all power cords from electrical outlets.
2. Remove the computer cover. See “Removing the computer cover” on page 36.

3. At the rear of the computer, remove the screw that secures the PCI Express card latch.

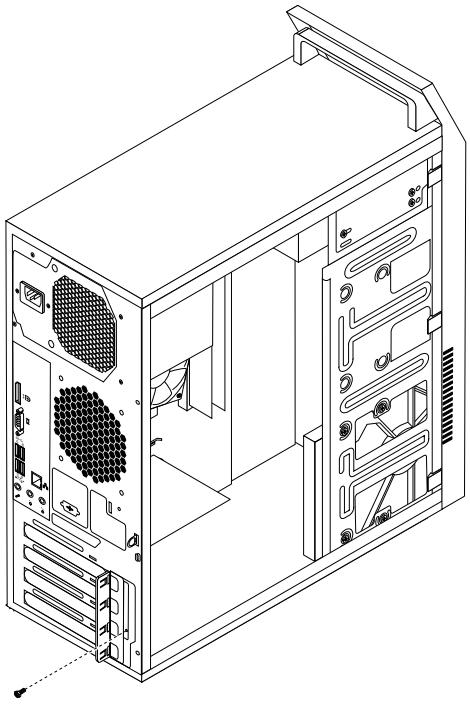

Figure 12. Removing the screw that secures the PCI Express card latch

4. Depending on whether you are installing or replacing a PCI Express card, do one of the following:
   - If you are installing a PCI Express card, remove the appropriate metal slot cover.

- If you are replacing an old PCI Express card, grasp the old card that is currently installed and gently pull it out of the slot.

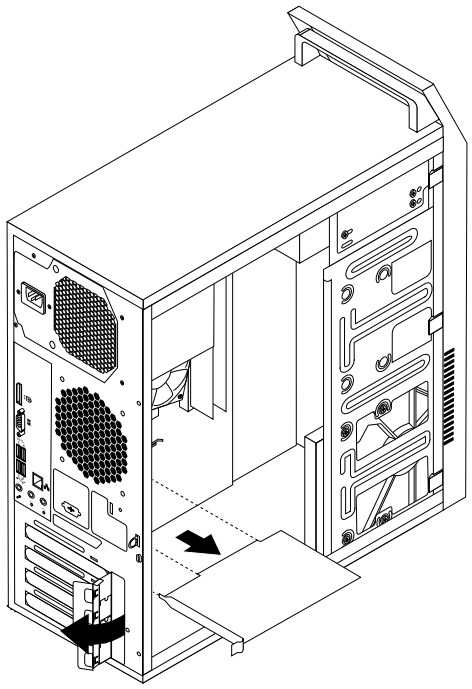

Figure 13. Removing a PCI Express card

Notes:

a. The card fits tightly into the card slot. If necessary, alternate moving each side of the card a small amount until it is removed from the card slot.

b. If the card is held in place by a retaining latch, press the card retaining latch **1** as shown to disengage the latch. Grasp the card and gently pull it out of the slot.

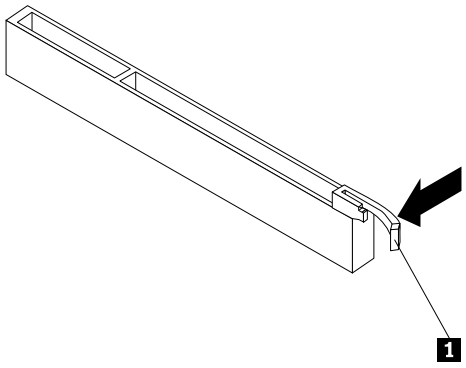

5. Remove the new PCI Express card from its static-protective package.
6. Install the new PCI Express card into the appropriate slot on the system board. See “Locating parts on the system board” on page 12.

   Note: If you are installing a PCI Express x16 graphics card, make sure that the memory slot retaining clips are closed before you install the graphics card.

7. Pivot the card latch to the closed position to secure the PCI Express card.

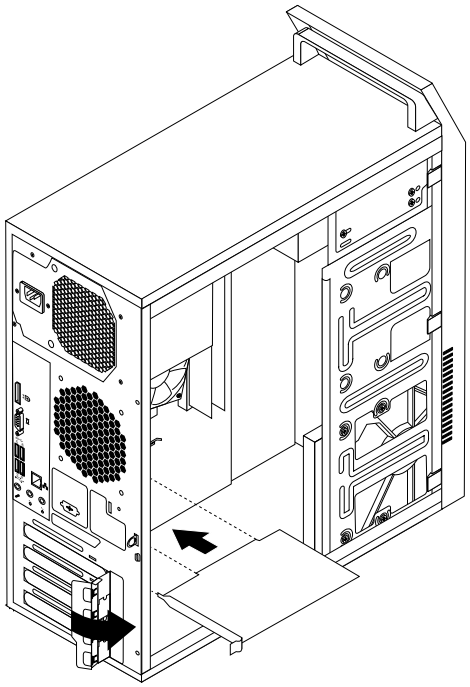

Figure 14. Installing a PCI Express card

8. Reinstall the screw to secure the PCI Express card latch in place.

What to do next:

- To work with another piece of hardware, go to the appropriate section.
- To complete the installation or replacement, go to "Completing the parts replacement" on page 67.

Installing or replacing a memory module

Attention:
Do not open your computer or attempt any repair before reading and understanding the "Important safety information" on page v.

This section provides instructions on how to install or replace a memory module.

Your computer has two slots for installing or replacing DDR3 UDIMMs that provide up to a maximum of 8 GB system memory. When installing or replacing a memory module, use 1 GB, 2 GB, or 4 GB DDR3 UDIMMs in any combination up to a maximum of 8 GB.

To install or replace a memory module, do the following:

1. Turn off the computer and disconnect all power cords from electrical outlets.
2. Remove the computer cover. See "Removing the computer cover" on page 36.
3. Lay the computer on its side for easier access to the system board.
4. Locate the memory slots. See "Locating parts on the system board" on page 12.
5. Remove any parts that might prevent your access to the memory slots. Depending on your computer model, you might need to remove the PCI Express x16 graphics card for easier access to the memory slots. See "Installing or replacing a PCI Express card" on page 38.

6. Depending on whether you are installing or replacing a memory module, do one of the following:
   - If you are replacing an old memory module, open the retaining clips and gently pull the memory module out of the memory slot.

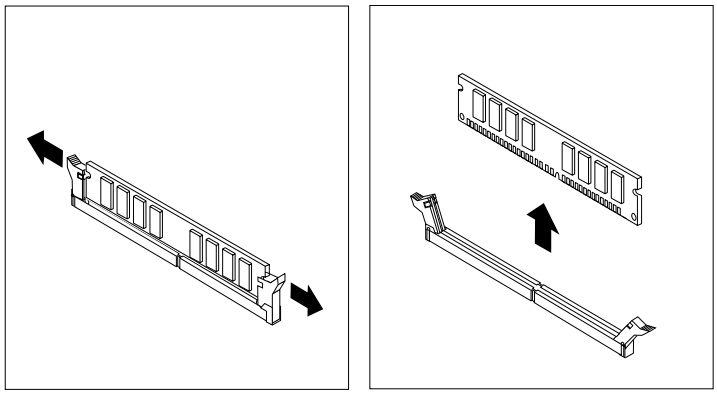

Figure 15. Removing a memory module

   - If you are installing a memory module, open the retaining clips of the memory slot into which you want to install the memory module.

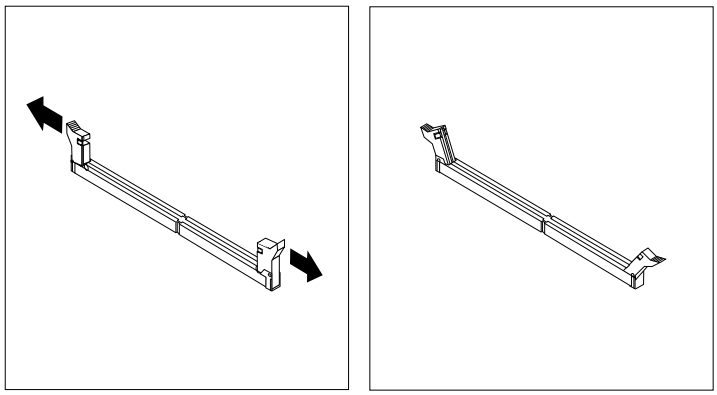

Figure 16. Opening the retaining clips

7. Position the new memory module over the memory slot. Make sure that the notch 1 on the memory module aligns correctly with the slot key 2 on the system board. Push the memory module straight down into the slot until the retaining clips close.

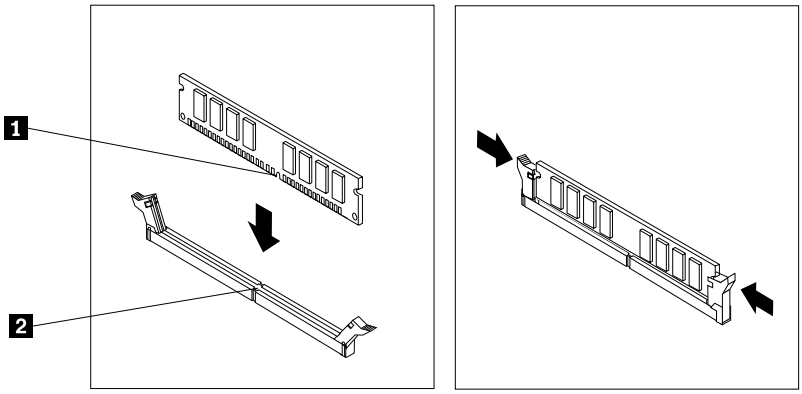

Figure 17. Installing a memory module

8. Reinstall the PCI Express x16 graphics card if you have removed it.

What to do next:

- To work with another piece of hardware, go to the appropriate section.
- To complete the installation or replacement, go to "Completing the parts replacement" on page 67.

Replacing the battery

Attention:
Do not open your computer or attempt any repair before reading and understanding the "Important safety information" on page v.

Your computer has a special type of memory that maintains the date, time, and settings for built-in features, such as parallel-port assignments (configuration). A battery keeps this information active when you turn off the computer.

The battery normally requires no charging or maintenance throughout its life; however, no battery lasts forever. If the battery fails, the date, time, and configuration information (including passwords) are lost. An error message is displayed when you turn on the computer.

Refer to the "Lithium battery notice" in the *Safety, Warranty, and Setup Guide* for information about replacing and disposing of the battery.

To replace the battery, do the following:

1. Turn off the computer and disconnect all power cords from electrical outlets.
2. Remove the computer cover. See "Removing the computer cover" on page 36.
3. Locate the battery. See "Locating parts on the system board" on page 12.

4. Remove the old battery.

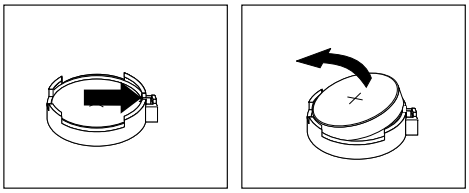

Figure 18. Removing the old battery

5. Install a new battery.

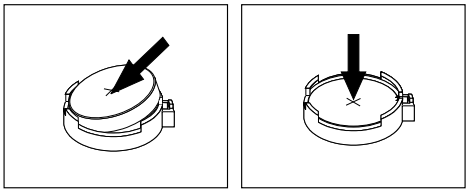

Figure 19. Installing a new battery

6. Reinstall the computer cover and connect the cables. See “Completing the parts replacement” on page 67.

   Note: When the computer is turned on for the first time after replacing the battery, an error message might be displayed. This is normal after replacing the battery.
7. Turn on the computer and all attached devices.
8. Use the Setup Utility program to set the date, time, and any passwords. See Chapter 7 “Using the Setup Utility program” on page 77.

Replacing the primary hard disk drive

Attention:
Do not open your computer or attempt any repair before reading and understanding the “Important safety information” on page v.

This section provides instructions on how to replace the primary hard disk drive.

To replace the primary hard disk drive, do the following:

1. Turn off the computer and disconnect all power cords from electrical outlets.
2. Remove the computer cover. See “Removing the computer cover” on page 36.
3. Locate the primary hard disk drive. See “Locating internal drives” on page 13.

   Note: There is also a secondary hard disk drive bay for you to purchase and install a secondary hard disk drive by yourself. If you want to install a secondary hard disk drive, use the same way of installing the primary hard disk drive.
4. Disconnect the signal cable and the power cable from the hard disk drive.
5. Remove the four screws that secure the hard disk drive. Then, slide the hard disk drive out of the chassis.

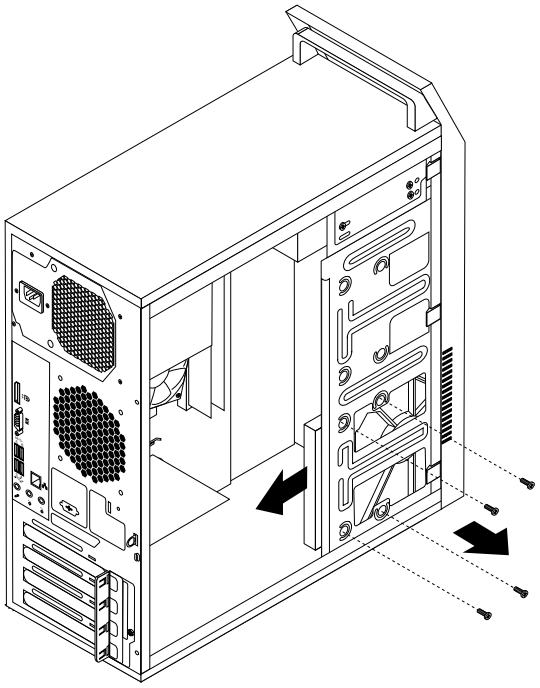

Figure 20. Removing the primary hard disk drive

6. Slide the new hard disk drive into the hard disk drive bay and align the screw holes in the new hard disk drive with the corresponding holes in the drive bay. Then, install the four screws to secure the new hard disk drive in place.

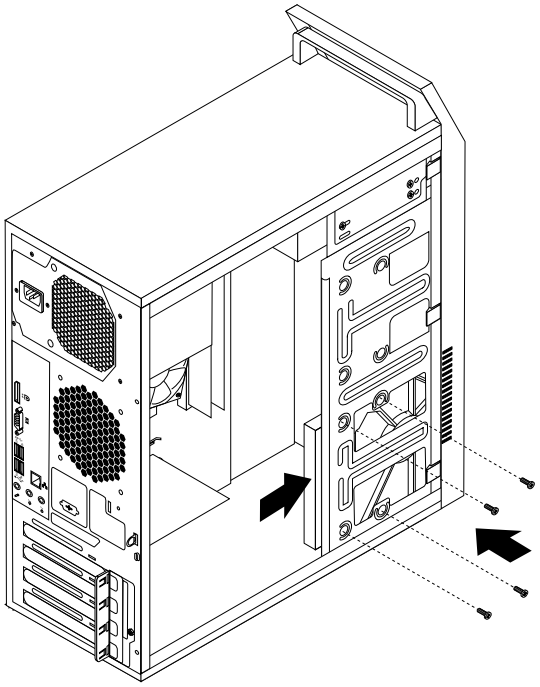

Figure 21. Installing the hard disk drive

7. Connect one end of the signal cable to the rear of the new hard disk drive and the other end to an available SATA connector on the system board. See “Locating parts on the system board” on page 12. Then, locate an available five-wire power connector and connect it to the rear of the new hard disk drive.

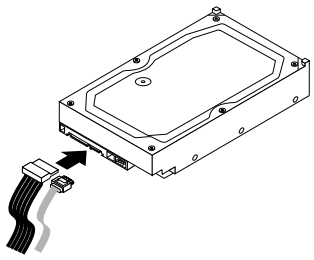

Figure 22. Connecting a SATA hard disk drive

What to do next:

- To work with another piece of hardware, go to the appropriate section.
- To complete the installation or replacement, go to “Completing the parts replacement” on page 67.

Replacing the optical drive

Attention:
Do not open your computer or attempt any repair before reading and understanding the “Important safety information” on page v.

This section provides instructions on how to install or replace the optical drive.

Note: The optical drive is only available in some models.

To replace an optical drive, do the following:

1. Turn off the computer and disconnect all power cords from electrical outlets.
2. Remove the computer cover. See “Removing the computer cover” on page 36.
3. Remove the front bezel. See “Removing and reinstalling the front bezel” on page 37.
4. Remove the three screws that secure the optical drive. Then, slide the optical drive out of the front of the computer.

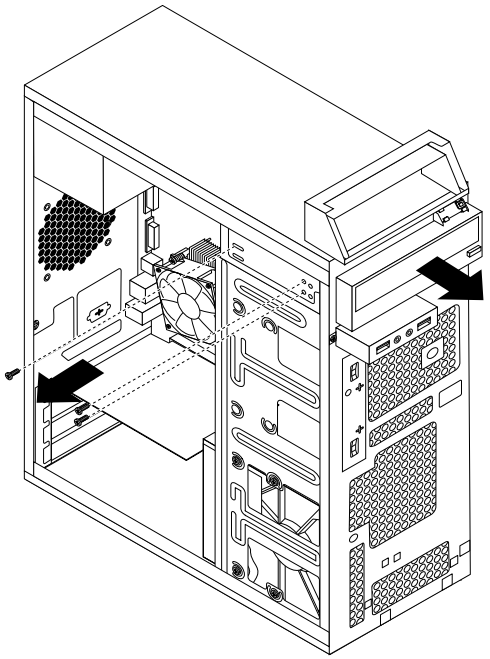

Figure 23. Removing the optical drive

5. Slide the new optical drive into the drive bay from the front and align the screw holes in the new optical drive with the corresponding holes in the drive bay. Then, install the three screws to secure the new optical drive in place.

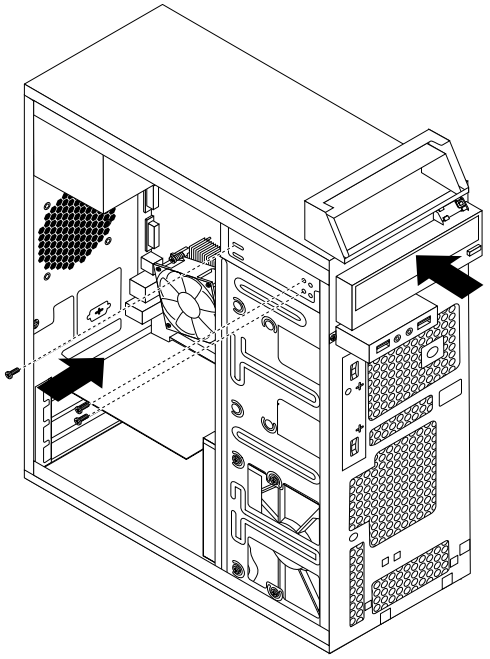

Figure 24. Installing the optical drive

6. Connect one end of the signal cable to the rear of the new optical drive and the other end to an available SATA connector on the system board. See “Locating parts on the system board” on page 12. Then, locate an available five-wire power connector and connect it to the rear of the new optical drive.

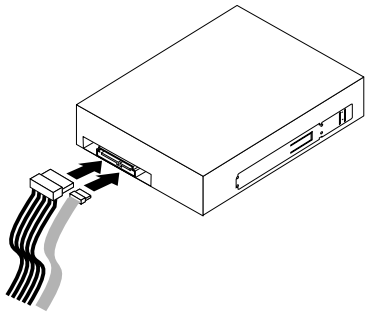

Figure 25. Connecting the optical drive

What to do next:

- To work with another piece of hardware, go to the appropriate section.
- To complete the installation or replacement, go to “Completing the parts replacement” on page 67.

Replacing the power supply assembly

Attention:
Do not open your computer or attempt any repair before reading and understanding the “Important safety information” on page v.

This section provides instructions on how to replace the power supply assembly.

Although there are no moving parts in your computer after the power cord has been disconnected, the following warnings are required for your safety and proper Underwriters Laboratories (UL) certification.

CAUTION:

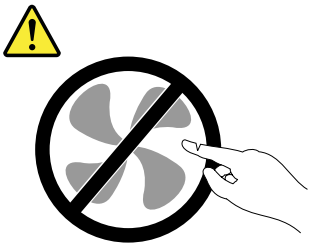

Hazardous moving parts. Keep fingers and other body parts away.

CAUTION:
Never remove the cover on a power supply or any part that has the following label attached.

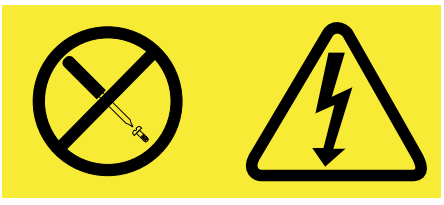

Hazardous voltage, current, and energy levels are present inside any component that has this label attached. There are no serviceable parts inside these components. If you suspect a problem with one of these parts, contact a service technician.

To replace the power supply assembly, do the following:

1. Turn off the computer and disconnect all power cords from electrical outlets.
2. Remove the computer cover. See “Removing the computer cover” on page 36.
3. Disconnect the power supply assembly cables from all drives and from the 24-pin power connector and 4-pin power connector on the system board. See “Locating parts on the system board” on page 12.
4. Lay the computer on its side and remove the four screws at the rear of the chassis that secure the power supply assembly.

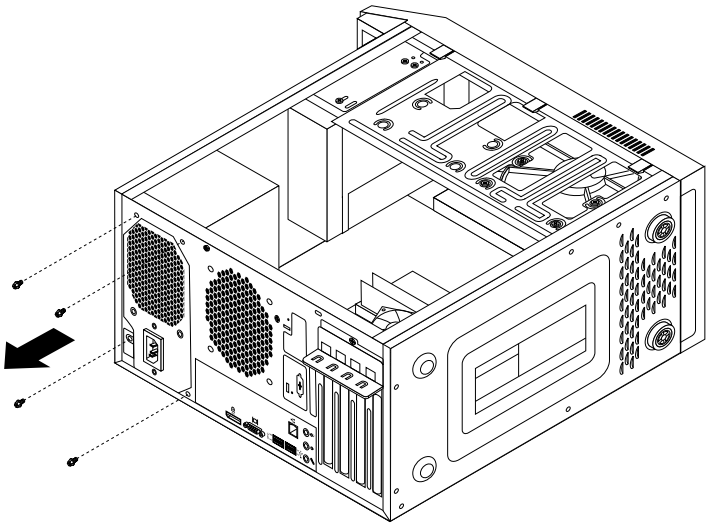

Figure 26. Removing the screws for the power supply assembly

5. Slide the power supply assembly to the front of the computer and then lift it out of the chassis.
6. Make sure that the new power supply assembly is the correct replacement. Some power supply assemblies automatically sense the voltage, some power supply assemblies are voltage specific, and some power supply assemblies have a voltage-selection switch. If your power supply assembly has a voltage-selection switch, make sure that you set the voltage-selection switch to match the voltage available at your electrical outlet. If necessary, use a ballpoint pen to slide the voltage-selection switch to the correct position.
   - If the voltage supply range in your local country or region is 100–127 V ac, set the voltage-selection switch to 115 V.
   - If the voltage supply range in your local country or region is 200–240 V ac, set the voltage-selection switch to 230 V.
7. Install the new power supply assembly into the chassis so that the screw holes in the power supply assembly align with those in the chassis.
8. Install and tighten the four screws to secure the power supply assembly.

   Note: Use only screws provided by Lenovo.
9. Reconnect the power supply assembly cables to the system board and each of the drives.
10. Secure the power supply assembly cables with the cable clips and ties in the chassis.

What to do next:

- To work with another piece of hardware, go to the appropriate section.
- To complete the installation or replacement, go to “Completing the parts replacement” on page 67.

Replacing the heat sink and fan assembly

Attention:
Do not open your computer or attempt any repair before reading and understanding the “Important safety information” on page v.

This section provides instructions on how to replace the heat sink and fan assembly.

CAUTION:



The heat sink and fan assembly might be very hot. Turn off the computer and wait three to five minutes to let the computer cool before removing the computer cover.

To replace the heat sink and fan assembly, do the following:

1. Turn off the computer and disconnect all power cords from electrical outlets.
2. Remove the computer cover. See “Removing the computer cover” on page 36.
3. Lay the computer on its side for easier access to the system board.
4. Locate the heat sink and fan assembly. See “Locating components” on page 11.
5. Disconnect the heat sink and fan assembly cable from the microprocessor fan connector on the system board. See “Locating parts on the system board” on page 12.

6. Follow this sequence to remove the four screws that secure the heat sink and fan assembly to the system board:
   a. Partially remove screw 1, then fully remove screw 2, and then fully remove screw 1.
   b. Partially remove screw 3, then fully remove screw 4, and then fully remove screw 3.

   Note: Carefully remove the four screws from the system board to avoid any possible damage to the system board. The four screws cannot be removed from the heat sink and fan assembly.

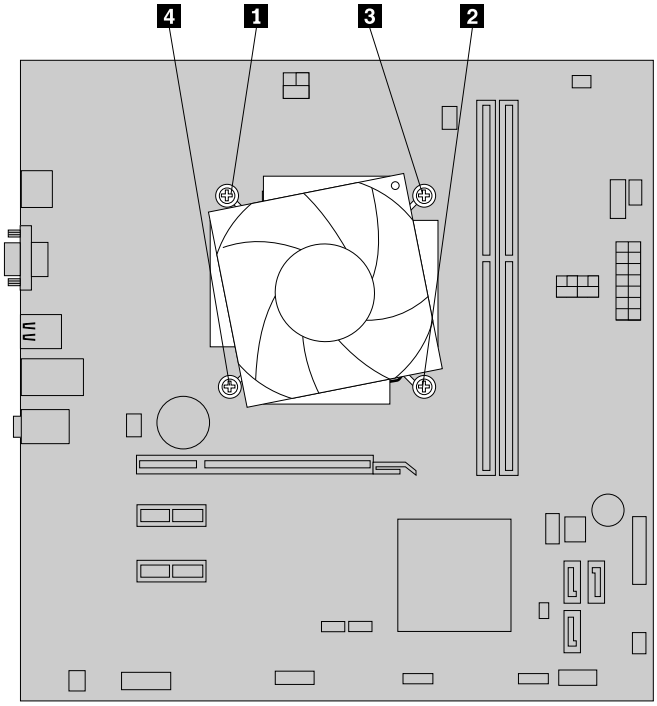

Figure 27. Removing the heat sink and fan assembly

7. Lift the failing heat sink and fan assembly off the system board.

   Notes:
   a. You might have to gently twist the heat sink and fan assembly to free it from the microprocessor.
   b. When handling the heat sink and fan assembly, do not touch the thermal grease on the bottom of the heat sink and fan assembly.
8. Place the new heat sink and fan assembly on the system board so that the four screws are aligned with the corresponding holes in the system board.

   Note: Position the new heat sink and fan assembly so that the heat sink and fan assembly cable is toward the microprocessor fan connector on the system board.
9. Follow the following sequence to install the four screws to secure the new heat sink and fan assembly. Do not over-tighten the screws.
   a. Partially tighten screw 1, then fully tighten screw 2, and then fully tighten screw 1.
   b. Partially tighten screw 3, then fully tighten screw 4, and then fully tighten screw 3.
10. Connect the new heat sink and fan assembly cable to the microprocessor fan connector on the system board. See “Locating parts on the system board” on page 12.

What to do next:

- To work with another piece of hardware, go to the appropriate section.

- To complete the installation or replacement, go to “Completing the parts replacement” on page 67.

Replacing the microprocessor

Attention:
Do not open your computer or attempt any repair before reading and understanding the “Important safety information” on page v.

This section provides instructions on how to replace the microprocessor.

CAUTION:



The heat sink and microprocessor might be very hot. Turn off the computer and wait three to five minutes to let the computer cool before removing the computer cover.

To replace the microprocessor, do the following:

1. Turn off the computer and disconnect all power cords from electrical outlets.
2. Remove the computer cover. See “Removing the computer cover” on page 36.
3. Lay the computer on its side for easier access to the system board.
4. Remove the heat sink and fan assembly. See “Replacing the heat sink and fan assembly” on page 50.

   Note: Place the heat sink and fan assembly on its side so that the thermal grease on the bottom of it does not get in contact with anything.
5. Lift the small handle 1 and open the retainer 2 to access the microprocessor 3.

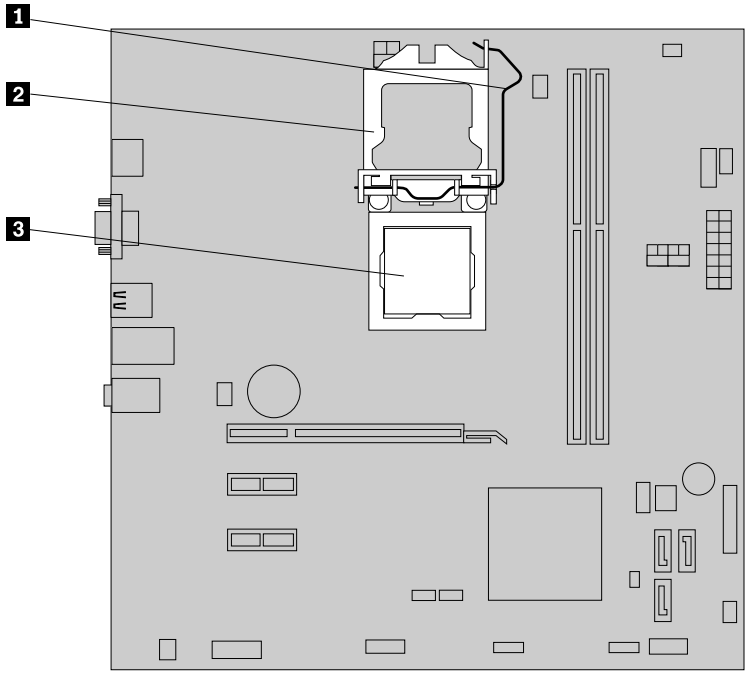

Figure 28. Accessing the microprocessor

6. Lift the microprocessor straight up and out of the microprocessor socket.

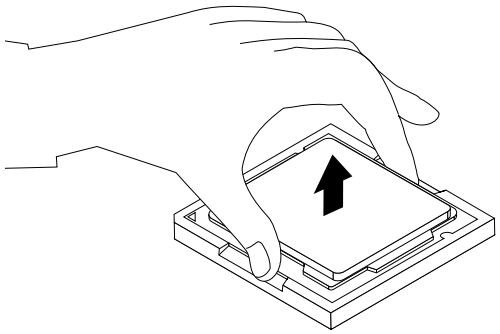

Figure 29. Removing the microprocessor

Notes:

a. Your microprocessor and socket might look different from the one illustrated.

b. Note the orientation of the microprocessor in the socket. You can either look for the small triangle **1** on one corner of the microprocessor or note the orientation of the notches **2** on the microprocessor. This is important when installing the new microprocessor on the system board.

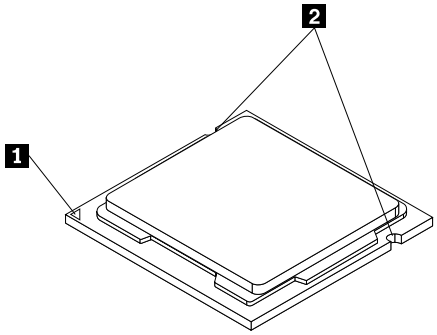

c. Touch only the edges of the microprocessor. Do not touch the gold contacts on the bottom.

d. Do not drop anything onto the microprocessor socket while it is exposed. The socket pins must be kept as clean as possible.

7. Make sure that the small handle is in the raised position and the microprocessor retainer is fully open.
8. Remove the protective cover that protects the gold contacts of the new microprocessor.
9. Hold the new microprocessor by its sides and align the small triangle on one corner of the new microprocessor with the corresponding small triangle on one corner of the microprocessor socket.

10. Lower the new microprocessor straight down into the microprocessor socket on the system board.

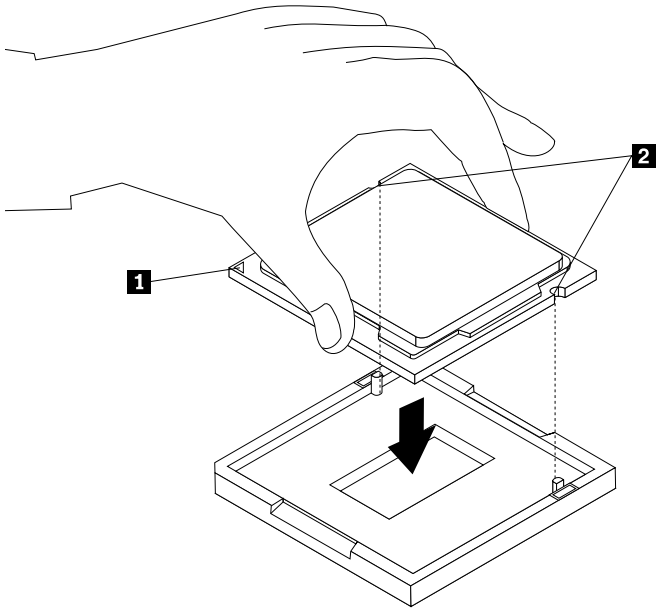

Figure 30. Installing the microprocessor

11. Close the microprocessor retainer and lock it into position with the small handle to secure the new microprocessor in the socket.
12. Reinstall the heat sink and fan assembly. See “Replacing the heat sink and fan assembly” on page 50.
13. Reconnect all cables that were disconnected from the system board.

What to do next:

- To work with another piece of hardware, go to the appropriate section.
- To complete the replacement, go to “Completing the parts replacement” on page 67.

Replacing the front audio and USB assembly

Attention:
Do not open your computer or attempt any repair before reading and understanding the “Important safety information” on page v.

This section provides instructions on how to replace the front audio and USB assembly.

To replace the front audio and USB assembly, do the following:

1. Turn off the computer and disconnect all power cords from electrical outlets.
2. Remove the computer cover. See “Removing the computer cover” on page 36.
3. Remove the front bezel. See “Removing and reinstalling the front bezel” on page 37.
4. Locate the front audio and USB assembly.
5. Disconnect the front audio and USB assembly cables from the system board. See “Locating parts on the system board” on page 12.

   Note: Make sure that you note the locations of the cables when you disconnect the cables from the system board.

6. Remove the screw that secures the front audio and USB assembly bracket to the chassis to remove the bracket from the chassis.

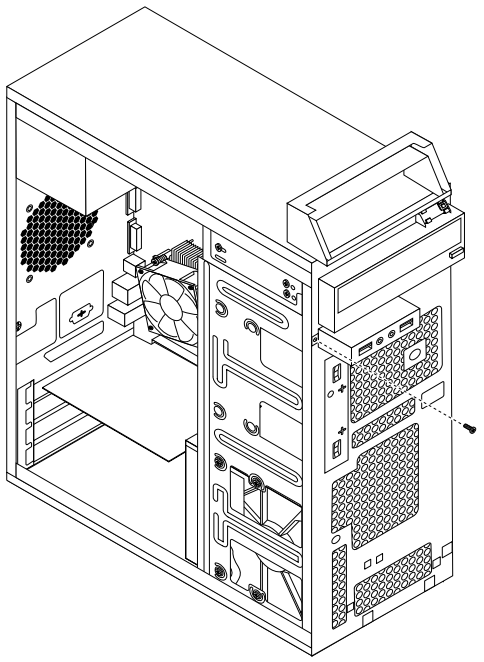

Figure 31. Removing the front audio and USB assembly

7. Install the new front audio and USB assembly into the chassis and align the screw hole in the bracket with the corresponding hole in the chassis.
8. Install the screw to secure the new front audio and USB assembly to the chassis.
9. Reconnect the front audio and USB assembly cables to the front audio connector and the front USB connector on the system board. See “Locating parts on the system board” on page 12.

What to do next:

- To work with another piece of hardware, go to the appropriate section.
- To complete the installation or replacement, go to “Completing the parts replacement” on page 67.

Replacing the rear fan assembly

Attention:
Do not open your computer or attempt any repair before reading and understanding the “Important safety information” on page v.

This section provides instructions on how to replace the rear fan assembly.

To replace the rear fan assembly, do the following:

1. Turn off the computer and disconnect all power cords from electrical outlets.
2. Remove the computer cover. See “Removing the computer cover” on page 36.
3. Locate the rear fan assembly. See “Locating components” on page 11.
4. Disconnect the rear fan assembly cable from the system fan connector on the system board. See “Locating parts on the system board” on page 12.

5. The rear fan assembly is attached to the chassis by four rubber mounts. Remove the rear fan assembly by breaking or cutting the rubber mounts and gently pulling the rear fan assembly out of the chassis.

   Note: The new rear fan assembly will have four new rubber mounts attached.

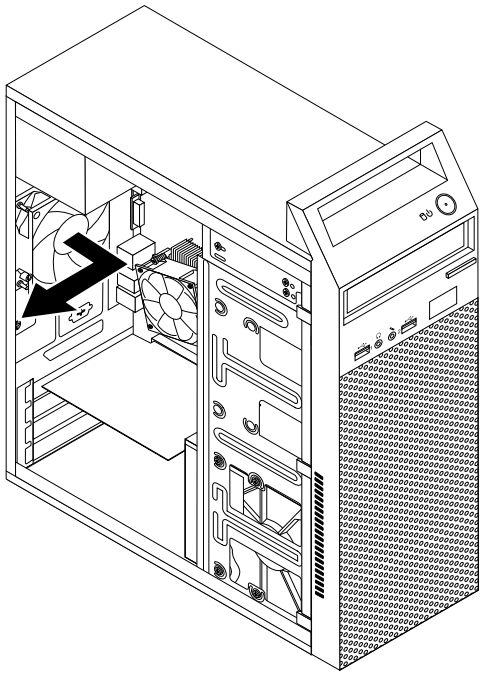

Figure 32. Removing the rear fan assembly

6. Install the new rear fan assembly by aligning the new rubber mounts with the corresponding holes in the chassis and push the rubber mounts through the holes.

7. Pull on the tips of the rubber mounts until the rear fan assembly is secured in place.

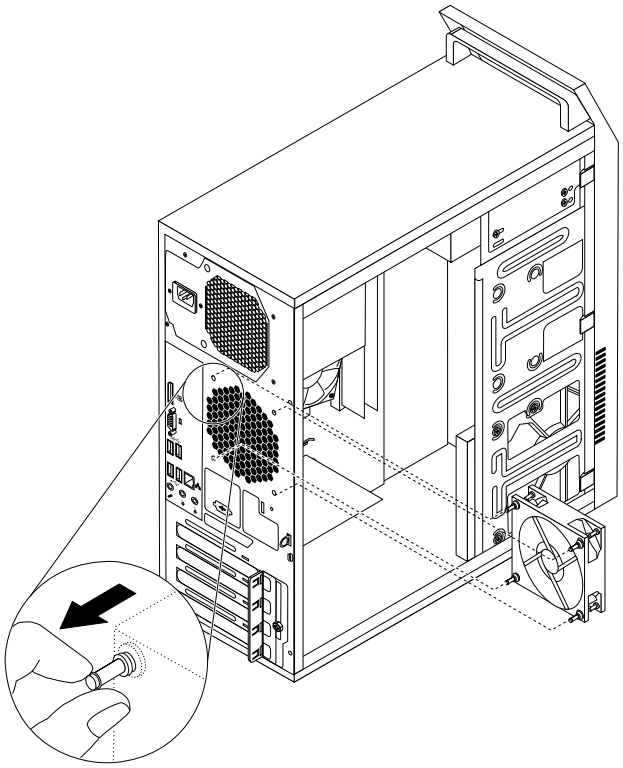

Figure 33. Installing the rear fan assembly

8. Connect the rear fan assembly cable to the system fan connector on the system board.

What to do next:

- To work with another piece of hardware, go to the appropriate section.
- To complete the replacement, go to "Completing the parts replacement" on page 67.

Replacing the WiFi units

Attention:
Do not open your computer or attempt any repair before reading and understanding the "Important safety information" on page v.

This section provides instructions on how to replace the WiFi units. The WiFi units include a WiFi adapter card, a WiFi card module, and a rear WiFi antenna cable.

Replacing the WiFi units involves the following operations:

- "Removing the WiFi adapter card" on page 57
- "Removing the WiFi card module" on page 58
- "Installing the WiFi units" on page 60

Removing the WiFi adapter card

To remove a WiFi adapter card, do the following:

1. Turn off the computer and disconnect all power cords from electrical outlets.

2. Remove the computer cover. See “Removing the computer cover” on page 36.
3. At the rear of the computer, remove the screw that secures the PCI Express card latch.
4. Grasp the WiFi adapter card that is currently installed and gently pull it out of the slot.

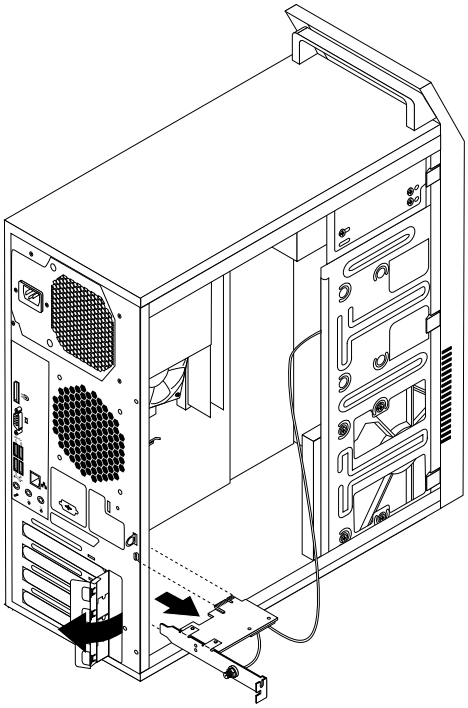

Figure 34. Removing the WiFi adapter card

Note: The card fits tightly into the card slot. If necessary, alternate moving each side of the card a small amount until it is removed from the card slot.

Removing the WiFi card module

To remove the WiFi card module, do the following:

1. Remove the WiFi adapter card from the computer, and then disconnect the front and rear WiFi antenna cables from the WiFi card module.

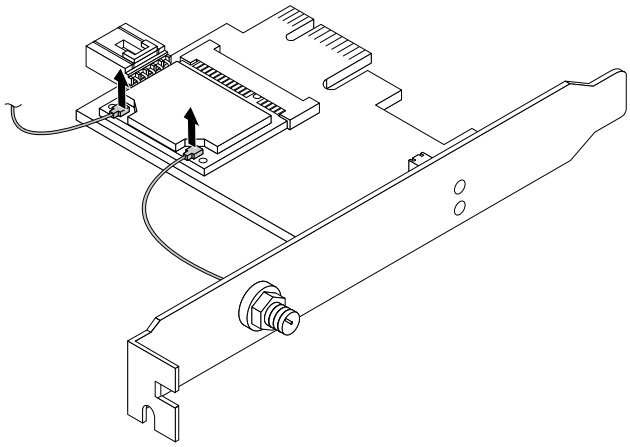

Figure 35. Removing the WiFi antenna cables

2. Remove the two screws that secure the WiFi card module to the WiFi adapter card.

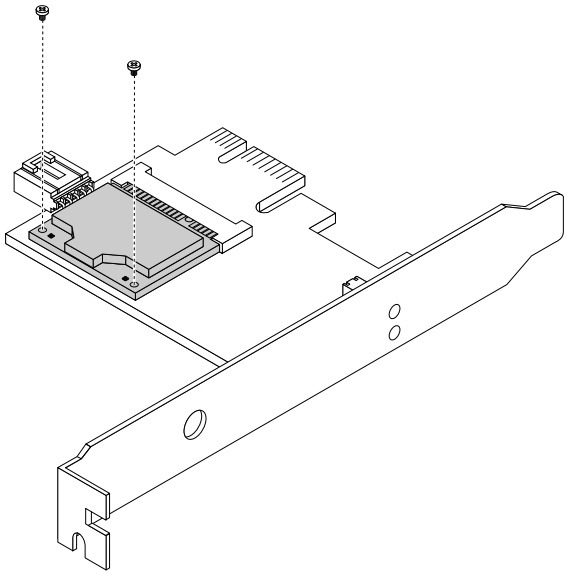

Figure 36. Removing the screws that secure the WiFi card module

3. Pull the WiFi card module out of the mini PCI Express slot to remove it from the WiFi adapter card.

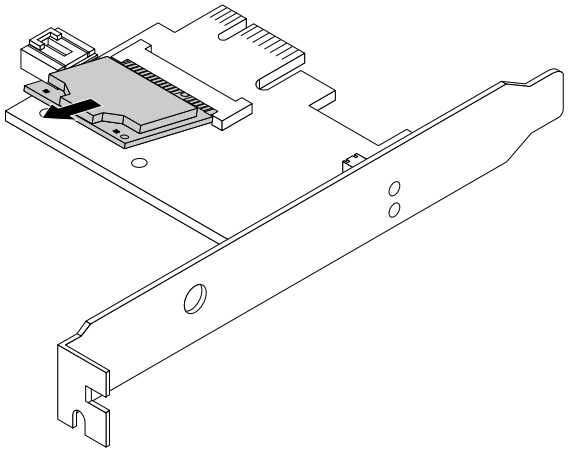

Figure 37. Removing the WiFi card module

Installing the WiFi units

To install the WiFi units, do the following:

1. Insert the WiFi card module into the mini PCI Express slot, and then install the two screws to secure the WiFi card module to the WiFi adapter card.

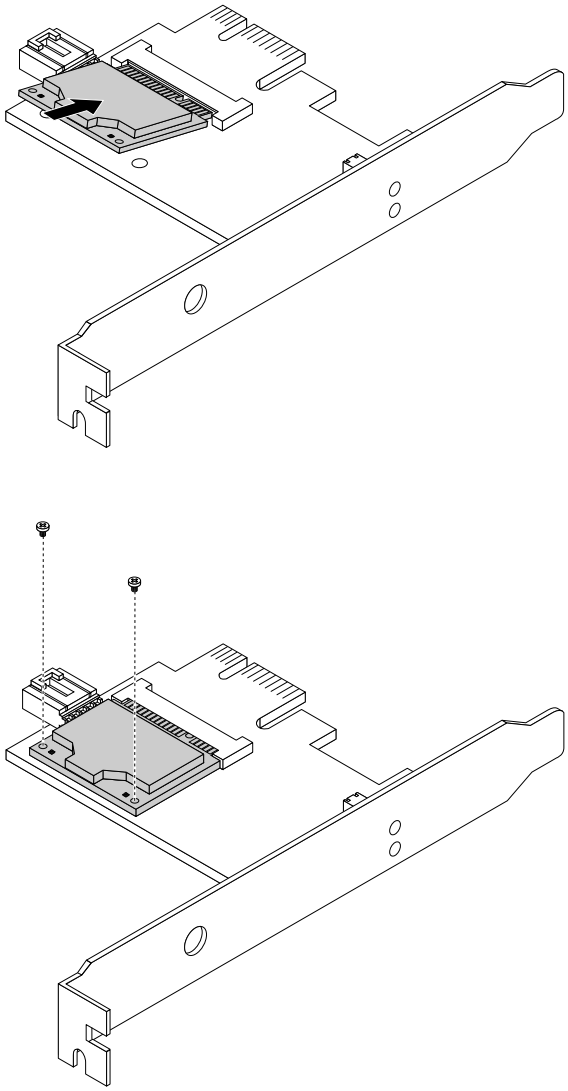

Figure 38. Installing the WiFi card module

2. Connect the front antenna cable and rear antenna cable to the WiFi card module.

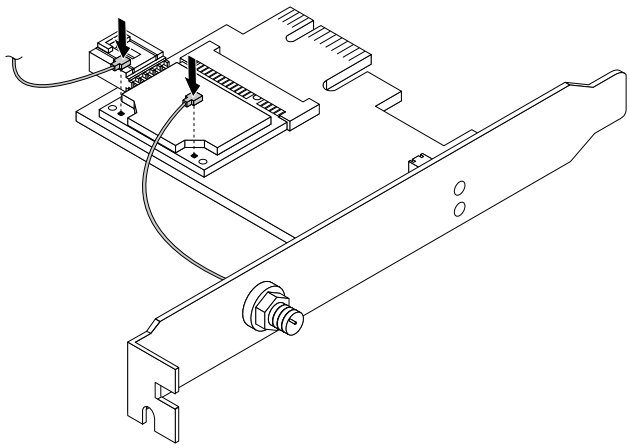

Figure 39. Installing the WiFi antenna cables

3. Install the WiFi adapter card into the PCI Express x1 slot on the system board. See “Locating parts on the system board” on page 12.
4. Pivot the card latch to the closed position to secure the WiFi adapter card.

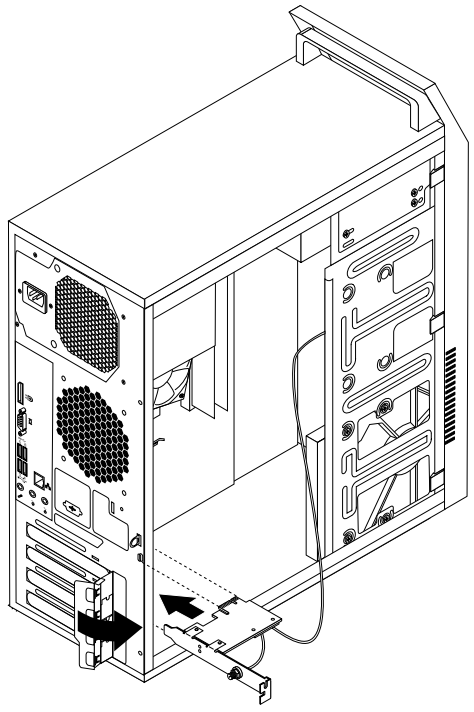

Figure 40. Installing the WiFi adapter card

What to do next:

- To work with another piece of hardware, go to the appropriate section.
- To complete the installation or replacement, go to “Completing the parts replacement” on page 67.

Installing or removing the rear WiFi antenna

Attention:
Do not open your computer or attempt any repair before reading and understanding the “Important safety information” on page v.

This section provides instructions on how to install or remove the rear WiFi antenna.

Installing the rear WiFi antenna

To install the rear WiFi antenna, do the following:

1. Turn off the computer and disconnect all power cords from electrical outlets.
2. Install the rear WiFi antenna to the rear WiFi antenna cable connector attached on the rear of the computer.
3. Adjust the angle of the rear antenna to lower the risk of breaking the antenna by accident.

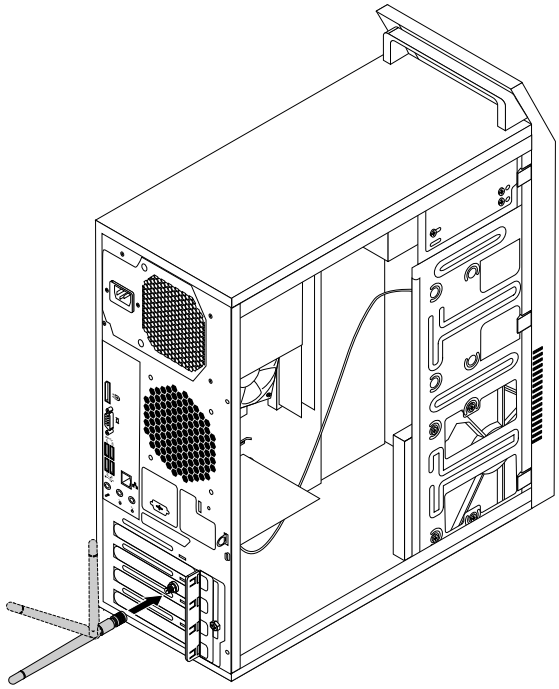

Figure 41. Installing the rear WiFi antenna

What to do next:

- To work with another piece of hardware, go to the appropriate section.
- To complete the installation or replacement, go to “Completing the parts replacement” on page 67.

Removing the rear WiFi antenna

To remove the rear WiFi antenna, do the following:

1. Turn off the computer and disconnect all power cords from electrical outlets.
2. Straighten the rear WiFi antenna so that it can be more easily twisted.

3. Hold the thicker end of the rear WiFi antenna and unscrew the WiFi antenna from the rear of the computer.

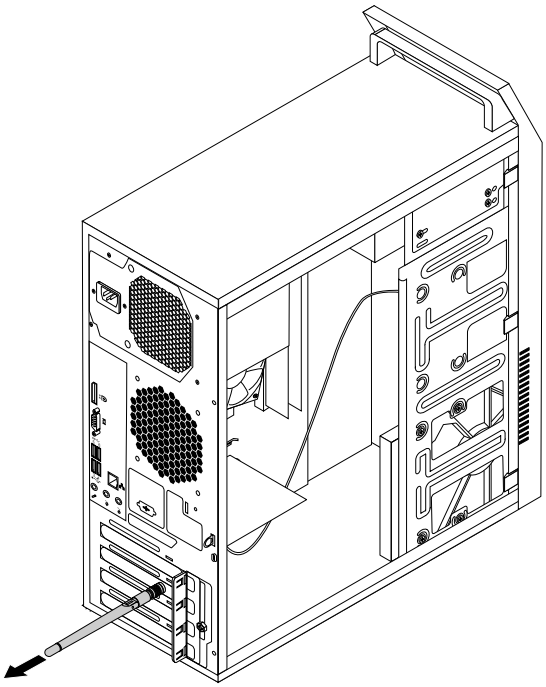

Figure 42. Removing the rear WiFi antenna

What to do next:

- To work with another piece of hardware, go to the appropriate section.
- To complete the installation or replacement, go to "Completing the parts replacement" on page 67.

Installing or removing the front WiFi antenna

Attention:
Do not open your computer or attempt any repair before reading and understanding the "Important safety information" on page v.

This section provides instructions on how to install or remove the front WiFi antenna.

Installing the front WiFi antenna

To install the front WiFi antenna, do the following:

1. Turn off the computer and disconnect all power cords from electrical outlets.
2. Remove the computer cover. See "Removing the computer cover" on page 36.
3. Remove the front bezel. See "Removing and reinstalling the front bezel" on page 37.
4. Peel off the paper that protects the stickers on the front antenna.

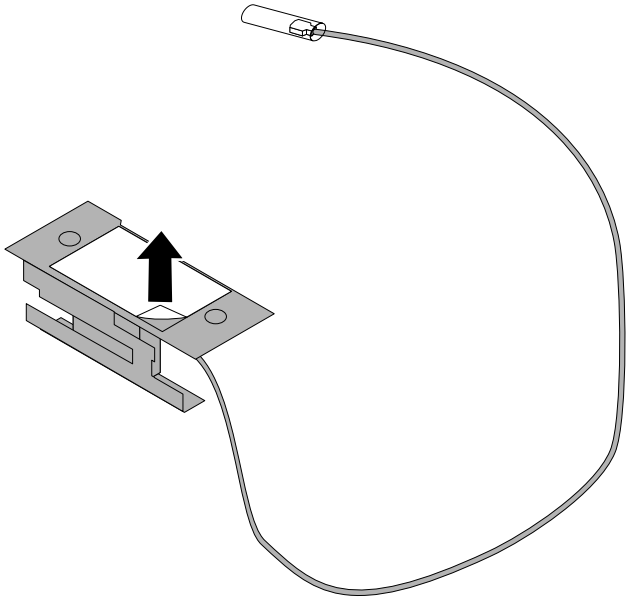

Figure 43. Peeling off the paper that protects the stickers

5. Stick the front antenna to the front panel as shown. Then insert the front antenna cable through the hole in the front panel.

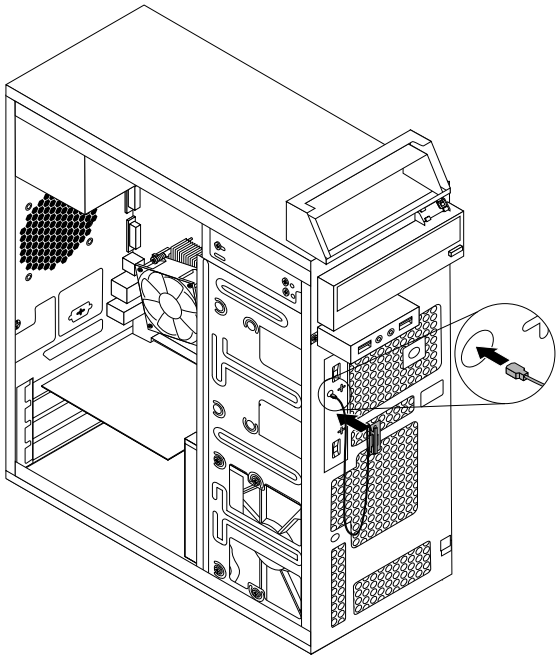

Figure 44. Installing the front WiFi antenna

6. Connect the front antenna cable to the WiFi card module.

What to do next:

- To work with another piece of hardware, go to the appropriate section.

- To complete the installation or replacement, go to “Completing the parts replacement” on page 67.

Removing the front WiFi antenna

To remove the front WiFi antenna, do the following:

1. Turn off the computer and disconnect all power cords from electrical outlets.
2. Remove the computer cover. See “Removing the computer cover” on page 36.
3. Remove the front bezel. See “Removing and reinstalling the front bezel” on page 37.
4. Disconnect the front antenna cable from the WiFi card module.
5. Remove the front antenna and cable from the front of the computer.

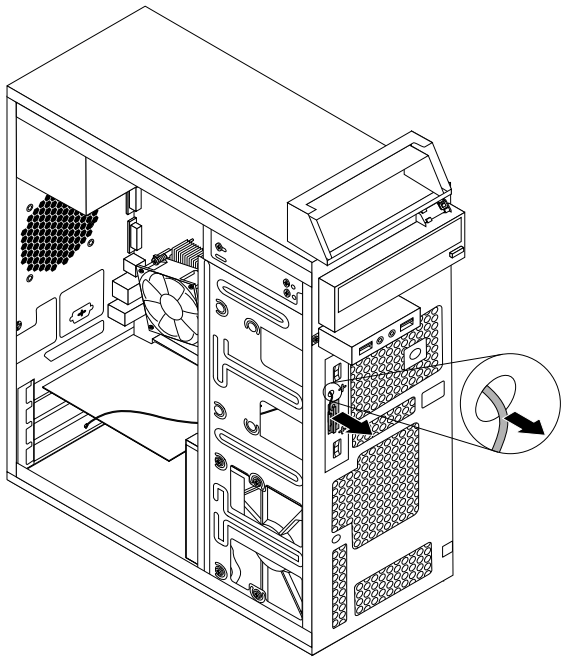

Figure 45. Removing the front WiFi antenna

What to do next:

- To work with another piece of hardware, go to the appropriate section.
- To complete the installation or replacement, go to “Completing the parts replacement” on page 67.

Replacing the keyboard or mouse

Attention:
Do not open your computer or attempt any repair before reading and understanding the “Important safety information” on page v.

This section provides instructions on how to replace the keyboard or mouse.

To replace the keyboard or mouse, do the following:

1. Disconnect the old keyboard cable or mouse cable from the computer.

2. Connect a new keyboard or mouse to one of the USB connectors on the computer. Depending on where you want to connect the new keyboard or mouse, see “Locating connectors, controls, and indicators on the front of your computer” on page 9 or “Locating connectors on the rear of your computer” on page 10.

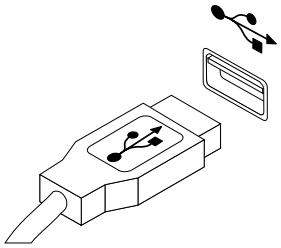

Figure 46. Connecting the USB keyboard or mouse

What to do next:

- To work with another piece of hardware, go to the appropriate section.
- To complete the installation or replacement, go to “Completing the parts replacement” on page 67.

Completing the parts replacement

After completing the installation or replacement for all parts, you need to reinstall the computer cover and reconnect cables. Depending on the parts you installed or replaced, you might need to confirm the updated information in the Setup Utility program. Refer to Chapter 7 “Using the Setup Utility program” on page 77.

To reinstall the computer cover and reconnect cables to your computer, do the following:

1. Make sure that all components have been reassembled correctly and that no tools or loose screws are left inside your computer. See “Locating components” on page 11 for the locations of various components in your computer.
2. Make sure that the cables are routed correctly. Keep cables clear of the hinges and sides of the computer chassis to avoid interference with closing the computer cover.
3. If you have removed the front bezel, reinstall it.

4. Position the computer cover on the chassis so that the rail guides on the bottom of the computer cover engage the rails on the chassis. Then, push the cover to the front of the computer until it snaps into position.

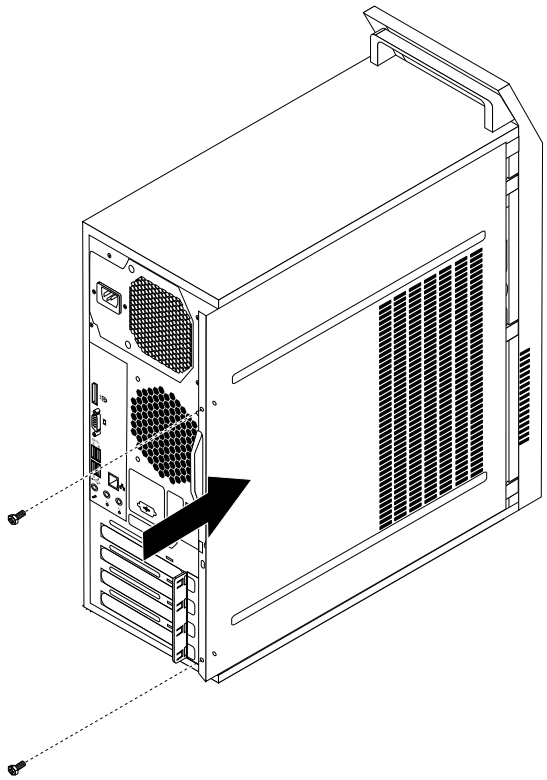

Figure 47. Reinstalling the computer cover

5. If there is a padlock available, lock the computer cover. See “Locking the computer cover” on page 30.
6. If there is a Kensington-style cable lock available, lock the computer. See “Attaching a Kensington-style cable lock” on page 31.
7. Reconnect the external cables and power cords to the computer. See “Locating connectors on the rear of your computer” on page 10.
8. To update your configuration, refer to Chapter 7 “Using the Setup Utility program” on page 77.

Note: In most areas of the world, Lenovo requires the return of the defective Customer Replaceable Unit (CRU). Information about this will come with the CRU or will come a few days after the CRU arrives.

Obtaining device drivers

You can obtain device drivers for operating systems that are not preinstalled at http://support.lenovo.com. Installation instructions are provided in readme files with the device-driver files.

Chapter 6. Recovery information

This chapter provides information about the recovery solutions provided by Lenovo.

- “Recovery information for the Windows 7 operating system” on page 69
- “Recovery information for the Windows 8 or Windows 8.1 operating system” on page 75

Recovery information for the Windows 7 operating system

This section contains the following topics:

- Creating and using recovery media
- Performing backup and recovery operations
- Using the Rescue and Recovery workspace
- Creating and using a rescue medium
- Installing or reinstalling device drivers
- Solving recovery problems

Notes:

1. The recovery information in this chapter only applies to the computers that have the Rescue and Recovery program or the Product Recovery program installed. If the **Enhanced Backup and Restore** icon in the Lenovo ThinkVantage Tools program is dimmed, it indicates that you need to install the Rescue and Recovery program manually before enabling its features. To install the Rescue and Recovery program, do the following:
   a. Click **Start → All Programs → Lenovo ThinkVantage Tools**, and double-click **Enhanced Backup and Restore**.
   b. Follow the instructions on the screen.
   c. When the installation process completes, the **Enhanced Backup and Restore** icon is activated.
2. There are a variety of methods to choose from when considering how to recover in the event of a software- or hardware-related problem. Some methods vary depending on the type of operating system that is installed.
3. The product on the recovery media may be used only for the following purposes:
   - Restore the product preinstalled on your computer
   - Reinstall the product
   - Modify the product using the Additional Files

Creating and using recovery media

You can use recovery media to restore the hard disk drive to the factory default state. Recovery media are useful if you transfer the computer to another area, sell the computer, recycle the computer, or put the computer in an operational state after all other methods of recovery have failed. As a precautionary measure, it is important to create recovery media as early as possible.

Note: The recovery operations you can perform using recovery media vary depending on the operating system from which the recovery media were created. The recovery media might contain a boot medium and a data medium. Your Microsoft Windows license permits you to create only one data medium, so it is important that you store the recovery media in a safe place after you have made them.

© Copyright Lenovo 2013

Creating recovery media

This section provides instructions on how to create recovery media on different operating systems.

Note: On the Windows 7 operating system, you can create recovery media using discs or external USB storage devices. On the Windows Vista operating system, you can create recovery media using only discs, so this operation is also called “creating Product Recovery discs.”

To create recovery media on the Windows 7 operating system, click **Start → All Programs → Lenovo ThinkVantage Tools → Factory Recovery Disks**. Then, follow the instructions on the screen.

Using recovery media

This section provides instructions on how to use recovery media on different operating systems.

On the Windows 7 operating system, you can use recovery media to restore the contents of the hard disk drive to the factory default state. Also, you can use recovery media to put the computer in an operational state after all other methods of hard disk drive recovery have failed.

Attention: When you use recovery media to restore the contents of the hard disk to the factory default state, all the files currently on the hard disk drive will be deleted and replaced by the factory default files.

To use recovery media on the Windows 7 operating system, do the following:

1. Depending on the type of your recovery media, connect the boot medium (memory key or other USB storage device) to the computer, or insert the boot disc into the optical drive.
2. Repeatedly press and release the F12 key when turning on the computer. When the Please select boot device window opens, release the F12 key.
3. Select the desired startup device and press Enter. The restore process begins.
4. Follow the instructions on the screen to complete the operation.

Note: After restoring your computer hard disk drive to the factory default state, you might have to reinstall device drivers for some devices. See “Reinstalling device drivers” on page 74.

Performing backup and recovery operations

The Rescue and Recovery program enables you to back up all your hard disk drive contents including the operating system, data files, software programs, and personal settings. You can designate where the Rescue and Recovery program stores the backup:

- In a protected area of your hard disk drive
- On the secondary hard disk drive if a secondary hard disk drive is installed in your computer
- On an attached external USB hard disk drive
- On a network drive
- On recordable discs (a recordable optical drive is required for this option)

After you have backed up the contents of the hard disk drive, you can restore the complete contents of the hard disk drive, restore selected files only, or restore the Windows operating system and applications only while keeping the other data on your hard disk drive.

Performing a backup operation

This section provides instructions on how to perform a backup operation using the Rescue and Recovery program on different operating systems.

- To perform a backup operation using the Rescue and Recovery program on the Windows 7 operating system, do the following:

1. From the Windows desktop, click **Start → All Programs → Lenovo ThinkVantage Tools → Enhanced Backup and Restore**. The Rescue and Recovery program opens.
2. In the Rescue and Recovery main window, click the **Launch advanced Rescue and Recovery** arrow.
3. Click **Back up your hard drive** and select backup operation options. Then, follow the instructions on the screen to complete the backup operation.

Performing a recovery operation

This section provides instructions on how to perform a recovery operation using the Rescue and Recovery program on different operating systems.

To perform a recovery operation using the Rescue and Recovery program on the Windows 7 operating system, do the following:

1. From the Windows desktop, click **Start → All Programs → Lenovo ThinkVantage Tools → Enhanced Backup and Restore**. The Rescue and Recovery program opens.
2. In the Rescue and Recovery main window, click the **Launch advanced Rescue and Recovery** arrow.
3. Click the **Restore your system from a backup** icon.
4. Follow the instructions on the screen to complete the recovery operation.

For more information about performing a recovery operation from the Rescue and Recovery workspace, see “Using the Rescue and Recovery workspace” on page 71.

Using the Rescue and Recovery workspace

The Rescue and Recovery workspace resides in a protected, hidden area of your hard disk drive that operates independently from the Windows operating system. This enables you to perform recovery operations even if you cannot start the Windows operating system. You can perform the following recovery operations from the Rescue and Recovery workspace:

- Rescue files from your hard disk drive or from a backup: The Rescue and Recovery workspace enables you to locate files on your hard disk drive and transfer them to a network drive or other recordable media, such as a USB device or a disc. This solution is available even if you did not back up your files or if changes were made to the files since your last backup operation. You can also rescue individual files from a Rescue and Recovery backup on your local hard disk drive, a USB device, or a network drive.
- Restore your hard disk drive from a Rescue and Recovery backup: If you have backed up your hard disk drive using the Rescue and Recovery program, you can restore the hard disk drive from a Rescue and Recovery backup, even if you cannot start the Windows operating system.
- Restore your hard disk drive to the factory default state: The Rescue and Recovery workspace enables you to restore the complete contents of your hard disk drive to the factory default state. If you have multiple partitions on your hard disk drive, you have the option to restore the C: partition and leave the other partitions intact. Because the Rescue and Recovery workspace operates independently from the Windows operating system, you can restore the hard disk drive to the factory default state even if you cannot start the Windows operating system.

Attention: If you restore the hard disk drive from a Rescue and Recovery backup or restore the hard disk drive to the factory default settings, all files on the primary hard disk drive partition (usually drive C:) will be deleted in the recovery process. If possible, make copies of important files. If you are unable to start the Windows operating system, you can use the rescue files feature of the Rescue and Recovery workspace to copy files from your hard disk drive to other media.

To start the Rescue and Recovery workspace, do the following:

1. Make sure that the computer is turned off.

2. Turn on your computer. When you see the logo screen, press Enter, and then press F11 to enter the Rescue and Recovery workspace.
3. If you have set a Rescue and Recovery password, type your password when prompted. The Rescue and Recovery workspace opens after a short delay.

   Note: If the Rescue and Recovery workspace fails to open, see “Solving recovery problems” on page 74.
4. Do one of the following:
   - To rescue files from your hard disk drive, click **Rescue files** and follow the instructions on the screen.
   - To restore your hard disk drive from a Rescue and Recovery backup or to restore your hard disk drive to the factory default settings, click **Full Restore** and follow the instructions on the screen.

For more information about the features of the Rescue and Recovery workspace, click **Help**.

Note: After restoring your hard disk drive to the factory default state, you might have to reinstall device drivers for some devices. See “Reinstalling device drivers” on page 74.

Creating and using a rescue medium

With a rescue medium, such as a disc or a USB hard disk drive, you can recover the computer from failures that prevent you from gaining access to the Rescue and Recovery workspace on your hard disk drive.

Notes:

1. The recovery operations you can perform using a rescue medium vary depending on the operating system.
2. The rescue disc can be started in all types of optical drives.

Creating a rescue medium

This section provides instructions on how to create a rescue medium on different operating systems.

To create a rescue medium on the Windows 7 operating system, do the following:

1. From the Windows desktop, click **Start → All Programs → Lenovo ThinkVantage Tools → Enhanced Backup and Restore**. The Rescue and Recovery program opens.
2. In the Rescue and Recovery main window, click the **Launch advanced Rescue and Recovery** arrow.
3. Click the **Create Rescue Media** icon. The Create Rescue and Recovery Media window opens.
4. In the **Rescue Media** area, select the type of the rescue medium you want to create. You can create a rescue medium using a disc, a USB hard disk drive, or a secondary internal hard disk drive.
5. Click **OK** and follow the instructions on the screen to create a rescue medium.

Using a rescue medium

This section provides instructions on how to use the rescue medium you have created.

- If you have created a rescue medium using a disc, use the following instructions to use the rescue medium:
  1. Turn off your computer.
  2. Repeatedly press and release the F12 key when turning on the computer. When the Please select boot device window opens, release the F12 key.
  3. In the Please select boot device window, select the desired optical drive as the first boot device. Then, insert the rescue disc into the optical drive and press Enter. The rescue medium starts.
- If you have created a rescue medium using a USB hard disk drive, use the following instructions to use the rescue medium:
  1. Attach the USB hard disk drive to one of the USB connectors on your computer.

2. Repeatedly press and release the F12 key when turning on the computer. When the Please select boot device window opens, release the F12 key.
3. In the Please select boot device window, select the USB hard disk drive as the first boot device and press Enter. The rescue medium starts.

When the rescue medium starts, the Rescue and Recovery workspace opens. The help information for each feature is available from the Rescue and Recovery workspace. Follow the instructions to complete the recovery process.

Reinstalling preinstalled applications and device drivers

Your computer has provisions that enable you to reinstall selected factory-installed applications and device drivers.

Reinstalling preinstalled applications

This section provides instructions on how to reinstall preinstalled applications.

To reinstall the selected applications preinstalled on your Lenovo computer, do the following:

1. Turn on the computer.
2. Go to the C:\SWTOOLS directory.
3. Open the apps folder. Within the apps folder, there are several subfolders named for various applications installed in your computer.
4. Open the appropriate application subfolder.
5. In the application subfolder, look for a SETUP.EXE file or other appropriate EXE files for setup. Double-click the file and follow the instructions on the screen to complete the installation.

Reinstalling preinstalled device drivers

This section provides instructions on how to reinstall preinstalled device drivers.

Attention: When you reinstall device drivers, you are changing the current configuration of your computer. Reinstall device drivers only when it is necessary to correct a problem with your computer.

To reinstall the device driver for a factory-installed device, do the following:

1. Turn on the computer.
2. Go to the C:\SWTOOLS directory.
3. Open the DRIVERS folder. Within the DRIVERS folder, there are several subfolders named for various devices installed in your computer, such as AUDIO or VIDEO.
4. Open the appropriate device subfolder.
5. Do one of the following:
   - In the device subfolder, look for a SETUP.exe file. Double-click the file and follow the instructions on the screen to complete the installation.
   - In the device subfolder, look for a README.txt file or a file with the .txt extension. This file might be named after the operating system, such as WIN98.txt. The TXT file contains information about how to install the device driver. Follow the instructions to complete the installation.
   - If the device subfolder contains a file with the .inf extension and you want to install the device driver using the INF file, refer to your Windows Help and Support information system for detailed information about how to install the device driver.

Note: If you need updated device drivers, see “Getting the latest device drivers for your computer” on page 85 for more information.

Reinstalling software programs

If a software program you installed on your computer is not working correctly, you might need to remove and reinstall it. Reinstalling overwrites the existing programs files and usually fixes any problems that you might have had with that program.

To remove a program in your system, see Microsoft Windows help system for detailed information.

To reinstall the program, do one of the following:

Note: The method of reinstalling a program varies from program to program. Refer to the documentation provided with the program to see if your program has special installation instructions.

- To reinstall most commercially available programs in your system, see Microsoft Windows help system for more information.
- To reinstall selected application programs that came preinstalled from Lenovo, do the following:
  1. Turn on the computer.
  2. Go to the `C:\SWTOOLS` directory.
  3. Open the APPS folder. Within the APPS folder, there are several subfolders named for various applications installed in your computer.
  4. Open the appropriate application subfolder.
  5. In the application subfolder, look for a SETUP.EXE file or other appropriate EXE files for setup. Double-click the file and follow the instructions on the screen to complete the installation.

Reinstalling device drivers

To reinstall a device driver for an option you installed, refer to the documentation that comes with the option.

When you reinstall device drivers, you are changing the current configuration of your computer. Reinstall device drivers only when it is necessary to correct a problem with your computer.

For more information about reinstalling device drivers that came with your computer, see “Reinstalling preinstalled applications and device drivers” on page 73.

Solving recovery problems

If you are unable to access the Rescue and Recovery workspace or the Windows environment, do one of the following:

- Use a rescue medium to start the Rescue and Recovery workspace. See “Creating and using a rescue medium” on page 72.
- Use recovery media if all other methods of recovery have failed and you need to restore the hard disk drive to the factory default settings. See “Creating and using recovery media” on page 69.

Note: If you are unable to access the Rescue and Recovery workspace or the Windows environment from a rescue medium or recovery media, you might not have the rescue device (an internal hard disk drive, a disc, a USB hard disk drive, or other external devices) set as the first boot device in the startup device sequence. You must first make sure that your rescue device is set as the first boot device in the startup device sequence in the Setup Utility program. See “Selecting a startup device” on page 80 for detailed information about temporarily or permanently changing the startup device sequence. For more information about the Setup Utility program, see Chapter 7 “Using the Setup Utility program” on page 77.

It is important to create a rescue medium and a set of recovery media as early as possible and store them in a safe place for future use.

Recovery information for the Windows 8 or Windows 8.1 operating system

This section provides information about the recovery solutions provided on computers preinstalled with the Windows 8 or Windows 8.1 operating system.

Refreshing your computer

If your computer does not perform well and the problem might be caused by a recently installed program, you can refresh your computer without losing your personal files or changing your settings.

Attention: If you refresh your computer, the programs that came with your computer and the programs that you installed from Windows Store will be reinstalled, but all other programs will be removed.

To refresh your computer, do one of the following:

- For Windows 8:
  1. Move the pointer to the top-right or bottom-right corner of the screen to display the charms. Click **Settings** → **Change PC settings** → **General**.
  2. In the **Refresh your PC without affecting your files** section, click **Get started**.
- For Windows 8.1:
  1. Move the pointer to the top-right or bottom-right corner of the screen to display the charms. Click **Settings** → **Change PC settings** → **Update and recovery** → **Recovery**.
  2. In the **Refresh your PC without affecting your files** section, click **Get started**.

Resetting your computer to the factory default settings

You can reset your computer to the factory default settings. Resetting the computer will reinstall the operating system, and reinstall all the programs and settings that came with your computer.

Attention: If you reset your computer, all your personal files and settings will be deleted. To avoid data loss, make a backup copy of all the data that you want to keep.

To reset your computer, do one of the following:

- For Windows 8:
  1. Move the pointer to the top-right or bottom-right corner of the screen to display the charms. Click **Settings** → **Change PC settings** → **General**.
  2. In the **Remove everything and reinstall Windows** section, click **Get started**.
- For Windows 8.1:
  1. Move the pointer to the top-right or bottom-right corner of the screen to display the charms. Click **Settings** → **Change PC settings** → **Update and recovery** → **Recovery**.
  2. In the **Remove everything and reinstall Windows** section, click **Get started**.

Using the advanced startup options

Advanced startup options enable you to change the startup settings of your Windows operating system, start the computer from an external device, or restore the Windows operating system from a system image.

To use the advanced startup options, do the following:

- For Windows 8:

1. Move the pointer to the top-right or bottom-right corner of the screen to display the charms. Click **Settings** → **Change PC settings** → **General**.
2. In the **Advanced startup** section, click **Restart now** → **Troubleshoot** → **Advanced options**.
3. Restart your computer following the instructions on the screen.

- For Windows 8.1:
  1. Move the pointer to the top-right or bottom-right corner of the screen to display the charms. Click **Settings** → **Change PC settings** → **Update and recovery** → **Recovery**.
  2. In the **Advanced startup** section, click **Restart now** → **Troubleshoot** → **Advanced options**.
  3. Restart your computer following the instructions on the screen.

Recovering your operating system if Windows 8 or Windows 8.1 fails to start

The Windows recovery environment on your computer is capable of operating independently from the Windows 8 or Windows 8.1 operating system. This enables you to recover or repair the operating system even if the Windows 8 or Windows 8.1 operating system fails to start.

After two consecutive failed boot attempts, the Windows recovery environment starts automatically. Then you can choose repair and recovery options by following the instructions on the screen.

Note: Ensure that your computer is connected to ac power during the recovery process.

For more details about the recovery solutions provided on computers preinstalled with the Windows 8 or Windows 8.1 operating system, refer to the help information system of the Windows 8 or Windows 8.1 operating system.

Chapter 7. Using the Setup Utility program

The Setup Utility program is used to view and change the configuration settings of your computer, regardless of which operating system you are using. However, the operating system settings might override any similar settings in the Setup Utility program.

Starting the Setup Utility program

To start the Setup Utility program, do the following:

1. Make sure that your computer is turned off.
2. Repeatedly press and release the F1 key when turning on the computer. When you hear multiple beeps or see a logo screen, release the F1 key.

   Note: If a Power-On Password or an Administrator Password has been set, the Setup Utility program menu will not be displayed until you type the correct password. For more information, see “Using passwords” on page 77.

When the POST detects that the hard disk drive has been removed from your computer or the memory module size has decreased, an error message will be displayed when you start the computer and you will be prompted to do one of the following:

- Press F1 to enter the Setup Utility program.

  Note: After you enter the Setup Utility program, press F10 to save changes and exit the Setup Utility program. Press Enter when prompted to confirm the exit. The error message will not be displayed again.
- Press F2 to bypass the error message and log in to the operating system.

Note: You have to enable the configuration change detection feature for the POST to detect the removal of the hard disk drive. To enable the configuration change detection feature, do the following:

1. Start the Setup Utility program.
2. From the Setup Utility program main menu, select **Security → Configuration Change Detection**, and press Enter.
3. Select **Enabled** and press Enter.
4. Press F10 to save changes and exit the Setup Utility program. Press Enter when prompted to confirm the exit.

Viewing and changing settings

The Setup Utility program menu lists various items about the system configuration. To view or change settings, start the Setup Utility program. See “Starting the Setup Utility program” on page 77. Then, follow the instructions on the screen.

You can use either the keyboard or the mouse to navigate through BIOS menu choices. The keys used to perform various tasks are displayed at the bottom of each screen.

Using passwords

By using the Setup Utility program, you can set passwords to prevent unauthorized access to your computer and data. The following types of passwords are available:

- Power-On Password

© Copyright Lenovo 2013

- Administrator Password
- Hard Disk Password

You do not have to set any passwords to use your computer. However, using passwords improves computing security. If you decide to set any passwords, read the following sections.

Password considerations

A password can be any combination of up to 64 alphabetic and numeric characters. For security reasons, it is recommended to use a strong password that cannot be easily compromised. To set a strong password, use the following guidelines:

- Have at least eight characters in length
- Contain at least one alphabetic character and one numeric character
- Setup Utility program and hard disk drive passwords are not case sensitive
- Not be your name or your user name
- Not be a common word or a common name
- Be significantly different from your previous passwords

Power-On Password

When a Power-On Password is set, you are prompted to type a valid password each time the computer is turned on. The computer cannot be used until the valid password is typed in.

Administrator Password

Setting an Administrator Password deters unauthorized users from changing configuration settings. If you are responsible for maintaining the configuration settings of several computers, you might want to set an Administrator Password.

When an Administrator Password is set, you are prompted to type a valid password each time you try to access the Setup Utility program. The Setup Utility program cannot be accessed until a valid password is typed in.

If both the Power-On Password and Administrator Password are set, you can type either password. However, you must use your Administrator Password to change any configuration settings.

Hard Disk Password

Setting a Hard Disk Password prevents unauthorized access to the data on the hard disk drive. When a Hard Disk Password is set, you are prompted to type a valid password each time you try to access the hard disk drive.

Notes:

- After you set a Hard Disk Password, your data on the hard disk drive is protected even if the hard disk drive is removed from one computer and installed in another.
- If the Hard Disk Password is forgotten, there is no way to reset the password or recover data from the hard disk drive.

Setting, changing, and deleting a password

To set, change, or delete a password, do the following:

1. Start the Setup Utility program. See “Starting the Setup Utility program” on page 77.

2. From the Setup Utility program main menu, select **Security**.
3. Depending on the password type, select **Set Power-On Password**, **Set Administrator Password**, or **Hard Disk Password**.
4. Follow the instructions on the right side of the screen to set, change, or delete a password.

   Note: A password can be any combination of up to 64 alphabetic and numeric characters. For more information, see "Password considerations" on page 78.

Erasing lost or forgotten passwords (clearing CMOS)

This section provides instructions on how to erase lost or forgotten passwords, such as a user password.

To erase a lost or forgotten password, do the following:

1. Remove all media from the drives and turn off all attached devices and the computer. Then, disconnect all power cords from electrical outlets and disconnect all cables that are connected to the computer.
2. Remove the computer cover. See "Removing the computer cover" on page 36.
3. Locate the Clear CMOS /Recovery jumper on the system board. See "Locating parts on the system board" on page 12.
4. Move the jumper from the standard position (pin 1 and pin 2) to the maintenance position (pin 2 and pin 3).
5. Reinstall the computer cover and connect the power cord. See "Completing the parts replacement" on page 67.
6. Turn on the computer and leave it on for approximately 10 seconds. Then, turn off the computer by holding the power switch for approximately five seconds.
7. Repeat step 1 through step 3.
8. Move the Clear CMOS /Recovery jumper back to the standard position (pin 1 and pin 2).
9. Reinstall the computer cover and connect the power cord. See "Completing the parts replacement" on page 67.

Enabling or disabling a device

This section provides information on how to enable or disable user access to the following devices:

USB Setup	Use this option to enable or disable a USB connector. When a USB connector is disabled, the device connected to the USB connector cannot be used.
SATA Controller	When this feature is set to **Disable**, all devices connected to the SATA connectors (such as hard disk drives or the optical drive) are disabled and cannot be accessed.

To enable or disable a device, do the following:

1. Start the Setup Utility program. See "Starting the Setup Utility program" on page 77.
2. From the Setup Utility program main menu, select **Devices**.
3. Depending on the device you want to enable or disable, do one of the following:
   - Select **USB Setup** to enable or disable a USB device.
   - Select **ATA Drives Setup → SATA Controller** to enable or disable a SATA device.
4. Select the desired settings and press Enter.
5. Press F10 to save and exit the Setup Utility program. See "Exiting the Setup Utility program" on page 81.

Selecting a startup device

If your computer does not start up from a device such as the disc or hard disk drive as expected, do one of the following to select the startup device you want.

Selecting a temporary startup device

Use this procedure to select a temporary startup device.

Note: Not all discs and hard disk drives are bootable.

1. Turn off your computer.
2. Repeatedly press and release the F12 key when turning on the computer. When the Please select boot device window displays, release the F12 key.
3. Select the desired startup device and press Enter. The computer will start up from the device you selected.

Note: Selecting a startup device from the Please select boot device window does not permanently change the startup sequence.

Selecting or changing the startup device sequence

To view or permanently change the configured startup device sequence, do the following:

1. Start the Setup Utility program. See “Starting the Setup Utility program” on page 77.
2. From the Setup Utility program main menu, select **Startup**.
3. Select the devices for the Primary Startup Sequence, the Automatic Startup Sequence, and the Error Startup Sequence. Read the information displayed on the right side of the screen.
4. Press F10 to save and exit the Setup Utility program. See “Exiting the Setup Utility program” on page 81.

Enabling ErP compliance mode

You can enable the energy-related products directive (ErP) compliance mode through the **Power** menu in the Setup Utility program to reduce the consumption of electricity when your computer is in standby or off mode.

To enable ErP compliance mode in the Setup Utility program, do the following:

1. Start the Setup Utility program. See “Starting the Setup Utility program” on page 77.
2. From the Setup Utility program main menu, select **Power → Enhanced Power Saving Mode**, and press Enter.
3. Select **Enabled** and press Enter.
4. From the **Power** menu, select **Automatic Power On** and press Enter.
5. Select **Wake on Lan** and press Enter.
6. Select **Disabled** and press Enter.
7. Press F10 to save changes and exit the Setup Utility program. Press Enter when prompted to confirm the exit.

Note: When ErP compliance mode is enabled, you can wake up your computer by doing one of the following:

- Pressing the power switch
- Enabling the wake up on alarm feature

  The wake up on alarm feature enables your computer to wake up at a set time. To enable the wake up on alarm feature, do the following:

1. Start the Setup Utility program. See “Starting the Setup Utility program” on page 77.
2. From the Setup Utility program main menu, select **Power → Automatic Power On**, and press Enter.
3. Select **Wake Up on Alarm** and press Enter. Then follow the instructions on the screen.
4. Press F10 to save changes and exit the Setup Utility program. Press Enter when prompted to confirm the exit.

- Enabling the after power loss feature

  The after power loss feature enables your computer to wake up when the power supply resumes after a sudden loss of electricity. To enable the after power loss feature, do the following:

  1. Start the Setup Utility program. See “Starting the Setup Utility program” on page 77.
  2. From the Setup Utility program main menu, select **Power → After Power Loss**, and press Enter.
  3. Select **Power On** and press Enter.
  4. Press F10 to save changes and exit the Setup Utility program. Press Enter when prompted to confirm the exit.

Exiting the Setup Utility program

After you finish viewing or changing settings, press Esc to return to the Setup Utility program main menu. You might have to press Esc several times. Do one of the following:

- If you want to save the new settings, press F10 to save and exit the Setup Utility program.
- If you do not want to save the settings, select **Exit → Discard Changes and Exit**, and then press Enter. When the Reset Without Saving window opens, select **Yes**, and then press Enter to exit the Setup Utility program.
- If you want to return to the default settings, press F9 to load the default settings, and then press F10 to save and exit the Setup Utility program.

Chapter 8. Updating system programs

This chapter provides information about updating the POST and BIOS, and how to recover from a POST and BIOS update failure.

Using system programs

System programs are the basic layer of software built into your computer. System programs include the POST, the BIOS, and the Setup Utility program. The POST is a set of tests and procedures that are performed each time you turn on your computer. The BIOS is a layer of software that translates instructions from other layers of software into electrical signals that the computer hardware can execute. You can use the Setup Utility program to view or change the configuration settings of your computer. See Chapter 7 “Using the Setup Utility program” on page 77 for detailed information.

Your computer system board has a module called electrically erasable programmable read-only memory (EEPROM, also referred to as flash memory). You can easily update the POST, the BIOS, and the Setup Utility program by starting your computer with a system-program-update disc or running a special update program from your operating system.

Lenovo might make changes and enhancements to the POST and BIOS. When updates are released, they are available as downloadable files on the Lenovo Web site at http://www.lenovo.com. Instructions for using the POST and BIOS updates are available in a TXT file that is included with the update files. For most models, you can download either an update program to create a system-program-update disc or an update program that can be run from the operating system.

Updating (flashing) the BIOS from a disc

This section provides instructions on how to update (flash) the BIOS from a disc.

Note: You can download a self-starting bootable disc image (known as an ISO image) with the system program updates to create a system-program-update disc. Go to:
http://support.lenovo.com

To update (flash) the BIOS from a disc, do the following:

1. Turn off your computer.
2. Repeatedly press and release the F12 key when turning on the computer. When the Startup Device Menu window opens, release the F12 key.
3. From the Startup Device Menu window, select the desired optical drive as the startup device. Then, insert the disc into this optical drive and press Enter. The update begins.
4. When prompted to change the serial number, it is suggested that you do not make this change by pressing N. However, if you do want to change the serial number, press Y, then type in the serial number and press Enter.
5. When prompted to change the machine type and model, it is suggested that you do not make this change by pressing N. However, if you do want to change the machine type and model, press Y, then type in the machine type and model and press Enter.
6. Follow the instructions on the screen to complete the update. After the update is completed, remove the disc from the optical drive.

© Copyright Lenovo 2013

Updating (flashing) the BIOS from your operating system

Note: Because Lenovo makes constant improvements to its Web sites, the Web page contents are subject to change without notice, including the contents referenced in the following procedure.

To update (flash) the BIOS from your operating system, do the following:

1. Go to http://www.lenovo.com/support.
2. Click **Download Drivers & Software**.
3. Click **Use Quick Path**.
4. Type the 4-digit machine type for your computer in the **Quick Path** field and then click **Find My Product**.
5. Click **BIOS**.
6. Locate the BIOS version that you want to download.
7. Click **Click for files**. All available files will be displayed.
8. Click the link for the readme file that contains the instructions for updating (flashing) the BIOS from your operating system.
9. Print these instructions. This is very important because these instructions will not be displayed on the screen after the download begins.
10. Follow the printed instructions to download, extract, and install the update.

Recovering from a POST/BIOS update failure

If the power to your computer is interrupted while the POST and BIOS is being updated, your computer might not restart correctly. If this happens, perform the following procedure to recover from the POST and BIOS update failure. This procedure is commonly called Boot-block Recovery.

1. Remove all media from the drives and turn off all attached devices and the computer. Then, disconnect all power cords from electrical outlets and disconnect all cables that are connected to the computer.
2. Remove the computer cover. See “Removing the computer cover” on page 36.
3. Locate the Clear CMOS /Recovery jumper on the system board. See “Locating parts on the system board” on page 12.
4. Remove any cables that impede access to the Clear CMOS /Recovery jumper.
5. Move the jumper from the standard position (pin 1 and pin 2) to the maintenance position (pin 2 and pin 3).
6. Reconnect any cables that were disconnected and reinstall the PCI Express card if removed.
7. Reinstall the computer cover and reconnect the power cords for the computer and monitor to electrical outlets. See “Completing the parts replacement” on page 67.
8. Turn on the computer and then insert the POST and BIOS update (flash update) disc into the optical drive. Wait a few minutes. Then, the recovery session begins. The recovery session will take two to three minutes. During this time, a warning message will be displayed and no action is needed from you.
9. After the recovery session is completed, there will be no video, and your computer will automatically turn off.
10. Repeat step 1 through step 4.
11. Move the Clear CMOS /Recovery jumper back to the standard position (pin 1 and pin 2).
12. Reconnect any cables that were disconnected and reinstall the PCI Express card if removed.
13. Reinstall the computer cover and reconnect any cables that were disconnected.
14. Turn on the computer to restart the operating system.

Chapter 9. Preventing problems

This chapter provides information that can help you avoid common problems and keep your computer running smoothly.

Keeping your computer current

In some situations you may find it necessary to have the most current software programs, device drivers, or operating system. This section explains how to get the latest updates for your computer.

Select any of the following topics:

- “Getting the latest device drivers for your computer” on page 85
- “Updating your operating system” on page 85
- “Using System Update” on page 86

Getting the latest device drivers for your computer

You can download and install updated device drivers from the Lenovo Web site by doing the following:

Note: Because Lenovo makes constant improvements to its Web sites, the Web page contents are subject to change without notice, including the contents referenced in the following procedure.

Attention: Do not download updated device drivers from the Windows Update Web site. The device drivers provided on the Windows Web site have not been tested by Lenovo and using them might cause unexpected problems. Obtain updated device drivers from Lenovo.

1. Go to http://support.lenovo.com.
2. Click **Download & Drivers**.
3. Select the machine type of your computer from the machine type list.
4. Click the category of device for which you need the device driver.
5. Click the appropriate device driver.
6. Download and install the device driver.

Updating your operating system

Microsoft makes updates available for the various Windows operating systems through the Microsoft Windows Update Web site. The Web site automatically determines what Windows updates are available for your specific computer and lists those updates only. Updates could include security fixes, new versions of Windows components (such as Media Player), fixes to other portions of the Windows operating system, or enhancements.

Attention: Do not download updated device drivers from the Windows Web site. The device drivers provided on the Windows Web site have not been tested by Lenovo and using them might cause unexpected problems. Obtain updated device drivers from Lenovo. See “Getting the latest device drivers for your computer” on page 85 for more information.

To access the Microsoft Windows Update site, do the following:

1. Go to http://windowsupdate.microsoft.com/.
2. Follow the instructions on the screen.

© Copyright Lenovo 2013

Using System Update

The System Update program helps you keep the software on your computer up-to-date. Update packages are stored on Lenovo servers and can be downloaded from the Lenovo Support Web site. Update packages can contain applications, device drivers, BIOS flashes, or software updates. When the System Update program connects to the Lenovo Support Web site, the System Update program automatically recognizes the machine type and model of your computer, the installed operating system, and the language of the operating system to determine what updates are available for your computer. The System Update program then displays a list of update packages and categorizes each update as critical, recommended, and optional to help you understand the importance. You have complete control of which updates to download and install. After you select the update packages you want, the System Update program automatically downloads and installs the updates without any further intervention from you.

The System Update program is preinstalled on most Lenovo computers and is ready to run. The only prerequisite is an active Internet connection. You can start the program manually, or you can use the schedule feature to enable the program to search for updates automatically at specified intervals. You also can predefine scheduled updates to search by severity (critical updates, critical and recommended updates, or all updates) so the list you choose from contains only those update types that are of interest to you.

To open the System Update program, see “Accessing Lenovo programs on the Windows 7 operating system” on page 5 or “Accessing Lenovo programs on the Windows 8 or Windows 8.1 operating system” on page 7.

If the System Update program is not currently installed on your computer, you can download it from the Lenovo Support Web site at http://www.lenovo.com/support.

Cleaning and maintenance

With appropriate care and maintenance your computer will serve you reliably. The following topics offer information to help you keep your computer in top working order.

- “Basics” on page 86
- “Cleaning your computer” on page 87
  - “Computer” on page 87
  - “Keyboard” on page 87
  - “Optical mouse” on page 87
  - “Display screen” on page 87
- “Good maintenance practices” on page 88

Basics

Here are some basic points about keeping your computer functioning properly:

- Keep your computer in a clean, dry environment. Make sure that it rests on a flat, steady surface.
- Do not place items on top of the monitor or cover any of the vents in the monitor or computer. These vents provide airflow to keep your computer from overheating.
- Keep food and drinks away from all parts of your computer. Food particles and spills might make the keyboard and mouse stick and unusable.
- Do not get the power switches or other controls wet. Moisture can damage these parts and cause an electrical hazard.
- Always disconnect a power cord by grasping the plug, but not the cord.

Cleaning your computer

It is a good practice to clean your computer periodically to protect the surfaces and ensure trouble-free operation.

CAUTION:
Be sure to turn off the computer and monitor power switches before cleaning the computer and monitor screen.

Computer

Use only mild cleaning solutions and a damp cloth to clean the painted surfaces of the computer.

Keyboard

To clean your computer keyboard, do the following:

1. Apply some isopropyl rubbing alcohol to a soft, dust-free cloth.
2. Wipe each keytop surface with the cloth. Wipe the keys one by one; if you wipe several keys at a time, the cloth may hook onto an adjacent key, and possibly damage it. Make sure that no liquid drips onto or between the keys.
3. To remove any crumbs or dust from beneath the keys, you can use a camera blower with a brush or cool air from a hair dryer.

Note: Avoid spraying cleaner directly onto the display or the keyboard.

Optical mouse

This section provides instructions on how to clean an optical mouse.

An optical mouse uses a light-emitting diode (LED) and an optical sensor to navigate the pointer. If the pointer on the screen does not move smoothly with the optical mouse, you might need to clean the mouse.

To clean an optical mouse, do the following:

1. Turn off your computer.
2. Disconnect the mouse cable from the computer.
3. Turn the mouse upside down to check the lens.
   a. If there is a smudge on the lens, gently clean the area with a plain cotton-tipped swab.
   b. If there is debris in the lens, gently blow the debris away from the area.
4. Check the surface on which you are using the mouse. If you have a very intricate picture or pattern beneath the mouse, it may be difficult for the digital signal processor (DSP) to determine changes in the mouse position.
5. Reconnect the mouse cable to the computer.
6. Turn your computer back on.

Display screen

Dust buildup compounds problems associated with glare. Remember to clean your monitor screen periodically. See “Cleaning a flat-panel monitor surface” on page 87 or “Cleaning a glass-screen surface” on page 88.

Cleaning a flat-panel monitor surface

If you have a flat-panel computer display that has a flexible film surface, do the following to clean the special surface. Wipe it gently with a soft, dry cloth, or blow on the screen to remove grit and other loose particles. Then moisten a cloth with LCD cleaner and wipe the screen surface.

Many computer supply stores carry the special cleaning fluids for displays. Use cleaning fluids developed for LCD displays only. First apply the fluid to a lint-free, soft cloth, then clean the LCD display. Some computer supply stores carry pre-moistened towelettes for LCD maintenance.

Cleaning a glass-screen surface

To clean a glass-screen surface, wipe it gently with a soft, dry cloth, or blow on the screen to remove grit and other loose particles. Then use a soft cloth moistened with a nonabrasive liquid glass cleaner.

Good maintenance practices

By performing a few good maintenance practices, you can maintain good computer performance, protect your data, and be prepared in case of a computer failure.

- Empty your recycle bin on a regular basis.
- Run the Windows Disk Defragmenter program occasionally to prevent performance problems caused by an excessive number of fragmented files.
- Clean out your Inbox, Sent Items, and Deleted Items folders in your e-mail application on a regular basis.
- Make backup copies of critical data on removable media memory at regular intervals and store the removable media in a safe location. The frequency of making backup copies depends on how critical the data is to you or your business. Lenovo makes a number of removable-media storage devices available as options, such as CD-RW drives and recordable DVD drives.
- Back up your entire hard disk drive on a regular basis.
- If you are using the Windows Vista operating system, use or schedule System Restore to take a system snapshot periodically.

  Note: Always take a snapshot before installing new device drivers, updating software, or installing new software.
- Keep your computer software up-to-date. See “Keeping your computer current ” on page 85 for more information.
- Keep a log book. Entries might include major software or hardware changes, device-driver updates, intermittent problems and what you did to resolve them, and any minor issues you might have experienced. A log book can help you or a Lenovo technician determine if a problem is related to change in hardware, change in software, or some other action that might have taken place.
- Create Product Recovery discs. See “Creating and using recovery media” on page 69 for more information about using Product Recovery discs to restore the hard disk drive to the factory default settings.
- Create rescue media. See “Creating and using a rescue medium” on page 72 for more information about using a Rescue medium such as a CD or DVD to recover from failures that prevent you from gaining access to the Windows environment or the Rescue and Recovery workspace on your hard disk drive.

Moving your computer

Take the following precautions before moving your computer.

1. Back up all files and data from the hard disk drive. There are a variety of backup programs available commercially. Your operating system also might have a backup program that you can use. Lenovo provides the Rescue and Recovery program to help you back up and restore data. See “Performing backup and recovery operations” on page 70 for more information.
2. Remove all media (diskettes, compact discs, tapes, and so on) from the drives.
3. Turn off the computer and all attached devices. Your hard disk drive automatically parks the read/write head in a nondata area. This prevents damage to the hard disk drive.
4. Unplug the power cords from electrical outlets.

5. Disconnect communication cables, such as modem or network cables, from the outlets first, and then disconnect the other ends from the computer.
6. Note where any remaining cables are attached to the computer; then, remove them.
7. If you saved the original shipping cartons and packing materials, use them to pack the units. If you are using different cartons, cushion the units to avoid damage.

Chapter 10. Troubleshooting and diagnostics

This chapter describes some basic troubleshooting and diagnostic programs. If your computer problem is not described here, see Chapter 11 “Getting information, help, and service” on page 111 for additional troubleshooting resources.

Basic troubleshooting

The following table provides information to help you troubleshoot your computer problems.

Note: If you cannot correct the problem, have the computer serviced. For a list of service and support telephone numbers, refer to the *Safety, Warranty, and Setup Guide* that comes with your computer or go to the Lenovo Support Web site at http://www.lenovo.com/support/phone.

Symptom	Action
The computer does not start when you press the power switch.	Verify that: • The power cord is correctly connected to the rear of the computer and to a working electrical outlet. • If your computer has a secondary power switch on the rear of the computer, make sure that it is switched on. • The power indicator on the front of the computer is on. • The computer voltage matches the voltage available at the electrical outlet for your country or region.
The monitor screen is blank.	Verify that: • The monitor signal cable is correctly connected to the monitor and to the appropriate monitor connector on the computer. • The monitor power cord is correctly connected to the monitor and to a working electrical outlet. • The monitor is turned on and the brightness and contrast controls are set correctly. • The computer voltage matches the voltage available at the electrical outlet for your country or region. • If your computer has two monitor connectors, be sure to use the connector on the graphics card.
The keyboard does not work.	Verify that: • The computer is turned on. • The keyboard is securely connected to a USB connector on the computer. • No keys are stuck.
The mouse does not work.	Verify that: • The computer is turned on. • The mouse is securely connected to a USB connector on the computer. • The mouse is clean. Refer to “Optical mouse” on page 87 for further information.

© Copyright Lenovo 2013

Symptom	Action
The operating system does not start.	Verify that: • The startup sequence includes the device where the operating system resides. Usually, the operating system is on the hard disk drive. For more information, see “Selecting a startup device” on page 80.
The computer beeps multiple times before the operating system starts.	Verify that no keys are stuck.

Troubleshooting procedure

Use the following procedure as a starting point for diagnosing problems you are experiencing with your computer:

1. Verify that the cables for all attached devices are connected correctly and securely.
2. Verify that all attached devices that require ac power are connected to properly grounded, functioning electrical outlets.
3. Verify that all attached devices are enabled in the BIOS settings of your computer. For more information about accessing and changing the BIOS settings, refer to your Chapter 7 “Using the Setup Utility program” on page 77.
4. Go to the “Troubleshooting” on page 92 and follow the instructions for the type of problem you are experiencing. If the Troubleshooting information does not help you resolve a problem, continue with the next step.
5. Try using a previously captured configuration to see if a recent change to hardware or software settings has caused a problem. Before restoring a previous configuration, capture your current configuration in case the older configuration settings do not solve the problem or have adverse effects. To restore a captured configuration, do the following:
   - For Windows 7: Click **Start → Control Panel → System and Security → System → System Protection → System Restore**.
   - For Windows 8 or Windows 8.1: Open Control Panel, and then click **System and Security → System → System Protection → System Restore**.

     Note: For detailed information on how to open Control Panel on Windows 8 and Windows 8.1, see “Accessing Lenovo programs on the Windows 8 or Windows 8.1 operating system” on page 7.

   If this does not correct the problem, continue with the next step.
6. Run the diagnostic program. See “Lenovo Solution Center” on page 109 for more information.
   - If the diagnostic program detects a hardware failure, contact the Lenovo Customer Support Center. See Chapter 11 “Getting information, help, and service” on page 111 for more information.
   - If you are unable to run the diagnostic program, contact the Lenovo Customer Support Center. See Chapter 11 “Getting information, help, and service” on page 111 for more information.
   - If the diagnostic program does not detect a hardware failure, continue with the next step.
7. Use an antivirus program to see if your computer has been infected by a virus. If the program detects a virus, remove the virus.
8. If none of these actions solve the problem, seek technical assistance. See Chapter 11 “Getting information, help, and service” on page 111 for more information.

Troubleshooting

Use the troubleshooting information to find solutions to problems that have definite symptoms.

If the symptom your computer is experiencing occurred immediately after you installed a new hardware option or new software, do the following before referring to the troubleshooting information:

1. Remove the new hardware option or software. If you must remove the computer cover to remove a hardware option, make sure that you review and follow the electrical safety information provided with your computer. For your safety, do not operate the computer with the cover removed.
2. Run the diagnostic programs to ensure that your computer is operating correctly.
3. Reinstall the new hardware option or software following the manufacturer's instructions.

Select the problem your computer is experiencing from the following list:

- "Audio problems" on page 93
- "CD problems" on page 94
- "DVD problems" on page 95
- "Intermittent problems" on page 97
- "Keyboard, mouse, or pointing device problems" on page 97
- "Monitor problems" on page 99
- "Networking problems" on page 101
- "Option problems" on page 103
- "Performance and lockup problems" on page 104
- "Printer problems" on page 106
- "Serial port problems" on page 106
- "Software problems" on page 107
- "USB problems" on page 108

Audio problems

Select your symptom from the following list:

- "No audio in Windows" on page 93
- "An audio disc or AutoPlay-enabled disc does not automatically play when it is inserted into a drive" on page 94
- "Sound comes from one external speaker only" on page 94
- "No audio in DOS applications or games" on page 94

No audio in Windows

Symptom: No audio in Windows

Actions:

- If you are using powered external speakers that have an On/Off control, verify that the On/Off control is set to the **On** position and the speaker power cable is connected to a properly grounded, functional ac electrical outlet.
- If your external speakers have a volume control, verify that the volume control is not set too low.
- Double-click the speaker icon in the Windows notification area. A master volume-control window opens. Verify that the **Mute** settings are not checked and none of the volume settings is set too low.
- Some models have a front audio panel you can use to adjust volume. If you have a front audio panel, verify that the volume is not set too low.
- Verify that your external speakers (and headphones, if used) are connected to the correct audio connector on the computer. Most speaker cables are color-coded to match the connector.

Note: When external-speaker or headphone cables are attached to the audio connector, the internal speaker, if present, is disabled. In most cases, if an audio adapter is installed in one of the expansion slots, the audio function built into the system board is disabled; use the audio jacks on the adapter.

- Make sure that the program you are running is designed for use in the Microsoft Windows operating system. If the program is designed to run in DOS, the program does not use the Windows sound feature and must be configured to use SoundBlaster Pro or SoundBlaster emulation.
- Verify that the audio device drivers are correctly installed. See Microsoft Windows help system for more information.

If these actions do not correct the problem, run the diagnostic programs (see “Diagnostic programs” on page 108 for instructions). If you need technical assistance, see Chapter 11 “Getting information, help, and service” on page 111.

An audio disc or AutoPlay-enabled disc does not automatically play when it is inserted into a drive

Symptom: An audio disc or AutoPlay-enabled disc does not automatically play when it is inserted into a drive

Action: See “CD problems” on page 94.

Sound comes from one external speaker only

Symptom: Sound comes from one external speaker only.

Actions:

- Ensure that the speaker cable is inserted completely into the connector on the computer.
- Make sure the cable that attaches the left speaker to the right speaker is securely connected.
- Double-click the speaker icon in the Windows notification area. A master volume-control window opens. Verify that the Balance settings are set correctly.

If these actions do not correct the problem, you might have a failing speaker. Have the speaker serviced. If you need technical assistance, see Chapter 11 “Getting information, help, and service” on page 111.

No audio in DOS applications or games

Symptom: No audio in DOS applications or games

Actions:

- Make sure that the DOS application or game is configured to use SoundBlaster Pro or SoundBlaster emulation. Refer to the documentation that comes with the application or game for instructions on setting sound-card settings.
- If these actions do not correct the problem, run the diagnostic programs (see “Diagnostic programs” on page 108 for instructions). If you need technical assistance, see Chapter 11 “Getting information, help, and service” on page 111.

CD problems

Select your symptom from the following list:

- “An audio disc or AutoPlay-enabled disc does not automatically play when it is inserted into a CD drive” on page 95
- “A CD or DVD does not work” on page 95
- “Unable to use a startable (bootable) recovery medium, such as the Product Recovery CD, to start your computer” on page 95

An audio disc or AutoPlay-enabled disc does not automatically play when it is inserted into a CD drive

Symptom: An audio disc or AutoPlay-enabled disc does not automatically play when it is inserted into a CD drive.

Actions:

- If you have multiple CD or DVD drives installed (or a combination of CD and DVD drives), try inserting the disc into the other drive. In some cases, only one of the drives is connected to the audio subsystem.
- If you are using the Windows 7 operating system, follow the action for “A CD or DVD does not work” on page 95.

If this does not correct the problem, follow the action for “A CD or DVD does not work” on page 95.

A CD or DVD does not work

Symptom: A CD or DVD does not work.

Actions:

- Verify that the disc is inserted correctly, with its label up.
- Make sure that the disc you are using is clean. To remove dust or fingerprints, wipe the disc clean with a soft cloth from the center to the outside. Wiping a disc in a circular motion might cause loss of data.
- Verify that the disc you are using is not scratched or damaged. Try inserting another disc that you know is good. If you cannot read from a known-good disc, you might have a problem with your CD or DVD drive or the cabling to your CD or DVD drive. Make sure that the power cable and signal cable are securely connected to the drive.

Unable to use a startable (bootable) recovery medium, such as the Product Recovery CD, to start your computer

Symptom: Unable to use a startable (bootable) recovery medium, such as the Product Recovery CD, to start your computer.

Action: Make sure that the CD or DVD drive is in the startup sequence before the hard disk drive. Refer to your “Selecting or changing the startup device sequence” on page 80 for information on viewing and changing the startup sequence. Note that on some models the startup sequence is permanently set and cannot be changed.

If these actions do not correct the problem, run the diagnostic programs (see “Diagnostic programs” on page 108 for instructions). If you need technical assistance, see Chapter 11 “Getting information, help, and service” on page 111.

DVD problems

Select your symptom from the following list:

- “Black screen instead of DVD video” on page 95
- “DVD movie will not play” on page 96
- “No audio or intermittent audio while playing DVD movie” on page 96
- “Playback is very slow or choppy” on page 96
- “Invalid disc or no disc found message” on page 96

Black screen instead of DVD video

Symptom: Black screen instead of DVD video

Actions:

- Restart the DVD player program.
- Close any open files, turn off the computer, and then restart the computer.
- Try a lower screen resolution or color depth.

If these actions do not correct the problem, run the diagnostic programs (see “Diagnostic programs” on page 108 for instructions). If you need technical assistance, see Chapter 11 “Getting information, help, and service” on page 111.

DVD movie will not play

Symptom: DVD movie will not play.

Actions:

- Make sure that the disc surface is clean and not scratched.
- Check the disc or package for regional coding. You might need to purchase a disc with coding for the region where you are using your computer.

If these actions do not correct the problem, run the diagnostic programs (see “Diagnostic programs” on page 108 for instructions). If you need technical assistance, see Chapter 11 “Getting information, help, and service” on page 111.

No audio or intermittent audio while playing DVD movie

Symptom: No audio or intermittent audio while playing DVD movie.

Actions:

- Check the volume control settings on your computer and on your speakers.
- Make sure that the disc surface is clean and not scratched.
- Check all cable connections to and from the speakers.
- Use the DVD menu for the video to select a different audio track.

If these actions do not correct the problem, run the diagnostic programs (see “Diagnostic programs” on page 108 for instructions). If you need technical assistance, see Chapter 11 “Getting information, help, and service” on page 111.

Playback is very slow or choppy

Symptom: Playback is very slow or choppy.

Actions:

- Disable any background programs, such as AntiVirus or Desktop Themes.
- Ensure that video resolution is set to less than 1152 x 864.

If these actions do not correct the problem, run the diagnostic programs (see “Diagnostic programs” on page 108 for instructions). If you need technical assistance, see Chapter 11 “Getting information, help, and service” on page 111.

Invalid disc or no disc found message

Symptom: Invalid disc or no disc found message

Actions:

- Ensure that a DVD disc is in the drive with the shiny side of the disc facing down.
- Ensure that video resolution is set to less than 1152 x 864.
- On computers that have a CD-ROM or CD-RW drive in addition to a DVD-ROM drive, make sure that the DVD disc is in the drive labeled “DVD”.

If these actions do not correct the problem, run the diagnostic programs (see “Diagnostic programs” on page 108 for instructions). If you need technical assistance, see Chapter 11 “Getting information, help, and service” on page 111.

Intermittent problems

Symptom: A problem occurs only occasionally and is difficult to repeat.

Actions:

- Verify that all cables and cords are securely connected to the computer and attached devices.
- Verify that when the computer is on, the fan grill is not blocked (there is air flow around the grill), and the fans are working. If airflow is blocked or the fans are not working, the computer might overheat.
- If SCSI devices are installed, verify that the last external device in each SCSI chain is terminated correctly. (See your SCSI documentation.)

If these actions do not correct the problem, run the diagnostic programs (see “Diagnostic programs” on page 108 for instructions). If you need technical assistance, see Chapter 11 “Getting information, help, and service” on page 111.

Keyboard, mouse, or pointing device problems

Select your symptom from the following list:

- “All or some keys on the keyboard do not work” on page 97
- “The mouse or pointing device does not work” on page 98
- “The pointer on the screen does not move smoothly with the mouse” on page 98
- “The fingerprint reader does not work” on page 98
- “The wireless keyboard does not work” on page 99

All or some keys on the keyboard do not work

Symptom: All or some keys on the keyboard do not work.

Actions:

- Verify that the keyboard cable is securely connected to the correct connector on the computer.
- If you are using an Enhanced Performance USB keyboard and one or more of the Rapid Access buttons are the only keys that are not working, these buttons might have been disabled or have not been assigned to a function. Use the help system in the Enhanced Performance Customization Keyboard program to help diagnose problems with the Rapid Access buttons.

  To open the Enhanced Performance Customization Keyboard program, do one of the following:

  – On the Windows 7 operating system, do the following:
    1. Click **Start → Control Panel**.
    2. Click **Hardware and Sound**.
    3. Click **Devices and Printers**.

4. Double-click **USB Enhanced Performance Keyboard**. The USB Enhanced Performance Keyboard Customization program starts.

– On the Windows 8 or Windows 8.1 operating system, do the following:

1. Open Control Panel.

   Note: For detailed information on how to open Control Panel on Windows 8 and Windows 8.1, see “Accessing Lenovo programs on the Windows 8 or Windows 8.1 operating system” on page 7.

2. Click **Hardware and Sound**.
3. Click **Devices and Printers**.
4. Double-click **USB Enhanced Performance Keyboard**. The USB Enhanced Performance Keyboard Customization program starts.

If these actions do not correct the problem, have the computer and keyboard serviced. See Chapter 11 “Getting information, help, and service” on page 111 for details.

The mouse or pointing device does not work

Symptom: The mouse or pointing device does not work.

Actions:

- Verify that the mouse or pointing-device cable is securely attached to the correct connector on the computer. Depending on the type of mouse you have, the mouse cable will connect to either the mouse, serial, or USB connector. Some keyboards have integrated USB connectors that can be used for a USB mouse or pointing device.
- Verify that the device drivers for the mouse or pointing device are installed correctly.
- If you are using a USB keyboard or mouse, verify that the USB connectors are enabled in the BIOS settings. See “Enabling or disabling a device” on page 79.

If these actions do not correct the problem, run the diagnostic programs (see “Diagnostic programs” on page 108 for instructions). If you need technical assistance, see Chapter 11 “Getting information, help, and service” on page 111.

The pointer on the screen does not move smoothly with the mouse

Symptom: The pointer on the screen does not move smoothly with the mouse.

Action: Erratic movement of the mouse pointer is generally caused by a buildup of dirt, oils, and other contaminants on the ball inside the mouse. Clean the mouse. See “Optical mouse” on page 87 for instructions.

The fingerprint reader does not work

Symptom: The fingerprint reader does not work.

Action: The following could cause the fingerprint reader not to operate properly:

- Not enrolling your fingerprint correctly.
- Scratching the surface of the reader with a hard, pointed object.
- Scraping the surface of the reader with your nail or anything hard.
- Using or touching the reader with a dirty finger.
- The surface of your finger is very different from when you enrolled your fingerprint.

The wireless keyboard does not work

Symptom: The wireless keyboard does not work.

Action: If the Transceiver Communications LED is on and the wireless Keyboard does not work, restart your computer. If restarting your computer does not solve the problem, verify that the following conditions are met:

- The batteries are properly installed.
- The batteries still retain their current.
- The wireless Keyboard is located less than 10 meters away from the transceiver.
- The transceiver is fully installed.

Action: If the Transceiver Communications LED is not on, reconnect the transceiver and the keyboard.

Monitor problems

Note: Many monitors have status-indicator lights and built-in controls for adjusting brightness, contrast, width, height, and other picture adjustments. However, the controls vary from monitor type to monitor type. For information about the status lights and using the controls, refer to the documentation that comes with your monitor.

Select your symptom from the following list:

- "Wrong characters appear on the screen" on page 99
- "The monitor works when you turn on the computer, but goes blank after some period of computer inactivity" on page 99
- "The monitor works when you turn on the computer, but goes blank when you start some application programs" on page 99
- "The image appears to be flickering" on page 100
- "The image is discolored" on page 100

Wrong characters appear on the screen

Symptom: Wrong characters appear on the screen.

Action: Have the computer serviced. For details, see Chapter 11 "Getting information, help, and service" on page 111.

The monitor works when you turn on the computer, but goes blank after some period of computer inactivity

Symptom: The monitor works when you turn on the computer, but goes blank after some period of computer inactivity.

Action: The computer is probably set for energy savings with the power-management feature. If the power-management feature is enabled, disabling it or changing the settings might solve the problem.

If these actions do not correct the problem, run the diagnostic programs (see "Diagnostic programs" on page 108 for instructions). If you need technical assistance, see Chapter 11 "Getting information, help, and service" on page 111.

The monitor works when you turn on the computer, but goes blank when you start some application programs

Symptom: The monitor works when you turn on the computer, but goes blank when you start some application programs.

Actions:

- Make sure that the monitor signal cable is securely connected to the monitor and the monitor connector on the computer. A loose cable can cause intermittent problems.
- Verify that the necessary device drivers for the application programs are installed. Refer to the documentation for the affected application program to see if device drivers are required.

If these actions do not correct the problem, run the diagnostic programs (see “Diagnostic programs” on page 108 for instructions). If you need technical assistance, see Chapter 11 “Getting information, help, and service” on page 111.

The image appears to be flickering

Symptom: The image appears to be flickering.

Actions:

- The monitor might be operating in a low-refresh rate display mode. Set the monitor to the highest, noninterlaced refresh rate supported by your monitor and the video controller in your computer.

  Attention: Using a resolution or refresh rate that is not supported by your monitor might damage it. Check the documentation that comes with your monitor to verify the supported refresh rates.
- The monitor might be affected by interference from nearby equipment. Magnetic fields around other devices, such as transformers, appliances, fluorescent lights, and other monitors might be causing the problem. Move fluorescent desk lighting or any equipment that produces magnetic fields farther away from the monitor. If this does not correct the problem, do the following:
  1. Turn off the monitor. (Moving a color monitor while it is turned on might cause screen discoloration.)
  2. Adjust the placement of the monitor and other devices so that they are at least 305 mm (12 inches) apart.
  3. Turn on the monitor.
- You can reset the refresh rate through your operating system Control Panel:

  On the Windows 7 operating system, click **Start → Control Panel → Hardware and Sound → Adjust screen resolution → Advanced Settings**. Then click the **Monitor** tab and select a new refresh rate.

  On the Windows 8 or Windows 8.1 operating system, open Control Panel and click **Hardware and Sound → Adjust screen resolution → Advanced Settings**. Then click the **Monitor** tab and select a new refresh rate.

  Note: For detailed information on how to open Control Panel on Windows 8 and Windows 8.1, see “Accessing Lenovo programs on the Windows 8 or Windows 8.1 operating system” on page 7.
- See your operating system documentation or help for further information on monitor settings.

If these actions do not correct the problem, your monitor might need service. See Chapter 11 “Getting information, help, and service” on page 111 for details.

The image is discolored

Symptom: The image is discolored.

Action: The monitor might be affected by interference from nearby equipment. Magnetic fields around other devices, such as transformers, appliances, fluorescent lights, and other monitors might be causing the problem. Move fluorescent desk lighting or any equipment that produces magnetic fields further away from the monitor. If this does not correct the problem, do the following:

1. Turn off the monitor. (Moving a color monitor while it is turned on might cause screen discoloration.)
2. Adjust the placement of the monitor and other devices so that they are at least 305 mm (12 inches) apart.

3. Turn on the monitor.

If these actions do not correct the problem, your monitor might need service. See Chapter 11 “Getting information, help, and service” on page 111 for details.

Networking problems

The following are the most common networking problems. Select your networking problem from the following list:

- “Ethernet problems” on page 101
- “A wireless LAN problem” on page 103
- “A wireless WAN problem” on page 103
- “Bluetooth problem” on page 103

For more information, see “Help and Support” on page 111.

Ethernet problems

For Ethernet problems, select your symptom from the following list:

- “Your computer cannot connect to the network” on page 101
- “The adapter stops working for no apparent reason” on page 102
- “If your computer is a Gigabit Ethernet model and you use a speed of 1000 Mbps, the connection fails or errors occur” on page 102
- “If your computer is a Gigabit Ethernet model, it cannot connect to the network at 1000 Mbps. Instead, it connects at 100 Mbps” on page 102

Your computer cannot connect to the network

Symptom: Your computer cannot connect to the network.

Actions: Ensure that:

- The cable is installed properly.

  The network cable must be securely connected to both the Ethernet connector of your computer and the RJ45 connector of the hub. The maximum allowable distance from the computer to hub is 100 meters. If the cable is connected and the distance is within acceptable limits but the problem persists, try a different cable.
- The cable is installed properly.
- You are using the correct device driver.

  On the Windows 7 operating system, do the following:

  1. Click **Start → Control Panel**.
  2. Click **Hardware and Sound**.
  3. Click **Device Manager**. If you are prompted for an administrator password or confirmation, type the password or provide confirmation.
  4. If an exclamation mark is displayed next to an adapter name under **Network adapters**, you might not be using the correct driver or the driver is not enabled. To update the driver, right-click the highlighted adapter.
  5. Click **Update Driver Software**, and then follow the instructions on the screen.

  On the Windows 8 or Windows 8.1 operating system, do the following:

  1. Open Control Panel.

Note: For detailed information on how to open Control Panel on Windows 8 and Windows 8.1, see "Accessing Lenovo programs on the Windows 8 or Windows 8.1 operating system" on page 7.

2. Click **Hardware and Sound**.
3. Click **Device Manager**. If you are prompted for an administrator password or confirmation, type the password or provide confirmation.
4. If an exclamation mark is displayed next to an adapter name under **Network adapters**, you might not be using the correct driver or the driver is not enabled. To update the driver, right-click the highlighted adapter.
5. Click **Update Driver Software**, and then follow the instructions on the screen.

- The switch port and the adapter have the same duplex setting.

  If you configured the adapter for full duplex, ensure that the switch port is also configured for full duplex. Setting the wrong duplex mode can degrade performance, cause data loss, or result in lost connections.
- You have installed all networking software that is necessary for your network environment.

  Check with your LAN administrator for the necessary networking software.

The adapter stops working for no apparent reason

Symptom: The adapter stops working for no apparent reason.

Action: The network driver files may be corrupt or missing. Update the driver by referring to the "Solution" description for the procedure to make sure that the correct device driver is installed.

The Wake on LAN feature is not working

Symptom: The Wake on LAN (WOL) feature is not working.

Actions:

- Make sure that WOL is enabled in the BIOS Setup Utility program.
- If it is, check with your LAN administrator for the necessary settings.

If your computer is a Gigabit Ethernet model and you use a speed of 1000 Mbps, the connection fails or errors occur

Symptom: If your computer is a Gigabit Ethernet model and you use a speed of 1000 Mbps, the connection fails or errors occur.

Actions:

- Use Category 5 wiring and make sure that the network cable is securely connected.
- Connect to a 1000 BASE-T hub/switch (not 1000 BASE-X).

If your computer is a Gigabit Ethernet model, it cannot connect to the network at 1000 Mbps. Instead, it connects at 100 Mbps

Symptom: If your computer is a Gigabit Ethernet model, it cannot connect to the network at 1000 Mbps. Instead, it connects at 100 Mbps.

Actions:

- Try another cable.
- Make sure that the link partner is set to auto-negotiate.
- Make sure that the switch is 802.3ab-compliant (gigabit over copper).

A wireless LAN problem

Symptom: You cannot connect using the built-in wireless networking card.

Actions:

- Make sure that your wireless LAN driver is the latest version. Check the Web site and verify the driver version supported by Access Connections is the latest documented in the readme file.
- Make sure that your computer is within range of a wireless access point.
- Make sure that the wireless radio is enabled by double-clicking the Access Connections icon in the Windows notification area.
- Check Network Name (SSID), and your encryption information. Use Access Connections to verify this case-sensitive information.

A wireless WAN problem

Message: Unauthorized WAN card is plugged in - Power off and remove the WAN card.

Action: The WAN card is not supported on this computer. Remove it.

Note: Some computer models do not have a wireless WAN.

Bluetooth problem

Symptom: Sound does not come from the Bluetooth headset or headphone but comes from the local speaker even though the headset or headphone is connected using the Headset profile or AV profile.

Action: Do the following:

1. Exit the application that uses the sound device (for example, Windows Media Player).
2. Open Control Panel.

   Note: For detailed information on how to open Control Panel on Windows 8 and Windows 8.1, see “Accessing Lenovo programs on the Windows 8 or Windows 8.1 operating system” on page 7.
3. Click **Hardware and Sound → Sound**.
4. Select the **Playback** tab.
5. If you are using the Headset profile, select **Bluetooth Hands-free Audio** and click the **Set Default** button. If you are using the AV profile, select **Stereo Audio** and click the **Set Default** button.
6. Click **OK** to close the Sound window.

Option problems

Use this information to diagnose problems with Lenovo hardware options that do not have their own troubleshooting information.

Select your symptom from the following list:

- “An option that was just installed does not work” on page 103
- “An option that previously worked does not work now” on page 104

An option that was just installed does not work

Symptom: An option that was just installed does not work.

Action: Verify that:

- The option is designed for your computer.

- You followed the installation instructions supplied with the option and the installation instructions provided with your computer, and all option files (such as device drivers, if required) are installed correctly.
- You have not loosened other installed options or cables.
- If the option is an adapter, you have provided enough hardware resources for the adapter to function correctly. See the documentation supplied with the adapter (as well as the documentation for any other installed adapters) to determine the resources required for each adapter.

If these actions do not correct the problem, run the diagnostic programs (see “Diagnostic programs” on page 108 for instructions). If you need technical assistance, see Chapter 11 “Getting information, help, and service” on page 111.

An option that previously worked does not work now

Symptom: An option that previously worked does not work now.

Actions:

- Verify that all option hardware and cable connections are secure.
- If the option comes with its own test instructions, use those instructions to test the option.
- If the failing option is a SCSI option, verify that:
  - The cables for all external SCSI options are connected correctly.
  - The last option in each SCSI chain, or the end of the SCSI cable, is terminated correctly.
  - All external SCSI options are turned on. External SCSI options must be turned on before the computer is turned on. For more information, see your SCSI documentation.
- Verify that the option and any required device drivers are installed correctly.

If these actions do not correct the problem, run the diagnostic programs (see “Diagnostic programs” on page 108 for instructions). If you need technical assistance, see Chapter 11 “Getting information, help, and service” on page 111.

Performance and lockup problems

Poor performance and lockup problems can be a result of any of the following:

- “Insufficient free hard disk drive space” on page 104
- “Excessive number of fragmented files” on page 105
- “Insufficient memory” on page 106

Make a selection from the above list to find out more about the corrective actions you can take.

Insufficient free hard disk drive space

Symptom: Insufficient free hard disk drive space

The Windows operating system will slow down and might produce errors if the hard disk drive gets too full.

To check the amount of free space on the Windows 7 operating system, do the following:

1. Click **Start → Computer**.
2. Right-click your C drive entry and then click **Properties**. The amount of free disk space is displayed.

To check the amount of free space on the Windows 8 operating system, do the following:

1. Open the File Explorer and click **Computer**.
2. Right-click your C drive entry and then click **Properties**. The amount of free disk space is displayed.

To check the amount of free space on the Windows 8.1 operating system, do the following:

1. Open File Explorer.
2. Right-click your C drive entry and then click **Properties**. The amount of free disk space is displayed.

To free up disk space, do any of the following:

- Method 1
  1. On the Windows 7 operating system, click **Start → Computer**. On the Windows 8 operating system, open File Explorer and click **Computer**. On the Windows 8.1 operating system, open File Explorer.
  2. Right-click your C drive entry and then click **Properties**.
  3. Click **Disk Cleanup**.
  4. A list of unnecessary file categories is displayed. Select each file category you want to delete, and then click **OK**.
- Method 2
  1. Open Control Panel.

     Note: For detailed information on how to open Control Panel on Windows 8 and Windows 8.1, see "Accessing Lenovo programs on the Windows 8 or Windows 8.1 operating system" on page 7.
  2. Click **Programs**.
  3. Click **Turn Windows features on or off**.
  4. A list of optional Windows components is displayed. Follow the instructions on the screen.
- Method 3
  1. On the Windows 7 operating system, click **Start → Computer**. On the Windows 8 operating system, open File Explorer and click **Computer**. On the Windows 8.1 operating system, open File Explorer.
  2. Right-click your C drive entry and then click **Properties**.
  3. Click **Disk Cleanup**.
  4. Click **Clean up system files**.
  5. Click the **More Options** tab.
  6. In the **Programs and Features** area, click the **Clean up** button.
  7. A list of installed programs is displayed. Select the program that you want to remove. Click **Uninstall/Change** or **Uninstall**.
- Clean out your Inbox, Sent Items, and Deleted Items folders from your e-mail application. The folder names and procedures vary depending on your e-mail application. If you need assistance, see the help system for your e-mail application.

Excessive number of fragmented files

Symptom: Excessive number of fragmented files

Action: Run the Windows Disk Defragmenter program.

Note: Depending on the size of the hard disk drive and amount of data currently stored on the hard disk drive, the disk-defragmentation process might take up to several hours to complete.

On the Windows 7 operating system, do the following:

1. Close any programs that are currently running and close any open windows.
2. Click **Start → Computer**.
3. Right-click your C drive entry and then click **Properties**.

4. Click the **Tools** tab.
5. Click **Defragment Now**, then click **Continue**.
6. Click **Defragment Now** again to start a disk-defragmentation process.

On the Windows 8 or Windows 8.1 operating system, do the following:

1. Close any programs that are currently running and close any open windows.
2. On Windows 8, open File Explorer and click **Computer**. On Windows 8.1, open File Explorer.
3. Right-click your C drive entry and then click **Properties**.
4. Click the **Tools** tab and then click **Optimize**.
5. Click **Optimize** in the Optimize Drives window that is displayed to start a disk-defragmentation process.

Insufficient memory

Symptom: Insufficient memory

In general, the more memory that is installed, the better the Windows operating system runs.

Action: Install additional memory. For information about purchasing memory, see Chapter 11 “Getting information, help, and service” on page 111. For step-by-step instructions on installing memory, see “Installing or replacing a memory module” on page 41.

If these actions do not correct the problem, run the diagnostic programs (see “Diagnostic programs” on page 108 for instructions). If you need technical assistance, see Chapter 11 “Getting information, help, and service” on page 111.

Printer problems

Symptom: The printer does not work.

Actions: Verify that:

1. The printer is turned on and is online.
2. Paper is loaded correctly.
3. The printer signal cable is securely connected to the correct parallel, serial, or USB connector on the computer.

Note: Non-IEEE-approved printer signal cables might cause unpredictable problems.

1. Any device drivers and other software that came with the printer are correctly installed.
2. You have assigned the printer port correctly in your operating system, application program, or BIOS settings. For more information about BIOS settings, see Chapter 7 “Using the Setup Utility program” on page 77.

If the problem persists, run the tests described in the documentation that comes with your printer. If you cannot correct the problem, have the computer serviced. See Chapter 11 “Getting information, help, and service” on page 111.

Serial port problems

Use this information to troubleshoot the serial port and devices attached to the serial port.

Symptom: Serial port cannot be accessed.

Actions:

- Make sure that the serial cable is securely connected to the serial port on the computer and to the serial device. If the serial device has its own power cord, make sure that it is attached to a properly grounded electrical outlet.
- If the serial device has its own On/Off switch, make sure that it is in the On position.
- If the serial device has an Online switch, make sure that it is in the Online position.
- If the serial device is a printer, make sure that paper is loaded correctly.
- Verify that any software supplied with the serial device is correctly installed. Refer to the documentation for the serial-device option.
- Make sure that the serial-port adapter, if you added one, is properly installed and firmly seated.

If these actions do not correct the problem, run the diagnostic programs (see “Diagnostic programs” on page 108 for instructions). If you need technical assistance, see Chapter 11 “Getting information, help, and service” on page 111.

Software problems

Select your symptom from the following list:

- “When using a sort feature, dates do not sort in the correct order” on page 107
- “Software does not work as expected” on page 107

When using a sort feature, dates do not sort in the correct order

Symptom: When using a sort feature, dates do not sort in the correct order.

Action: Some software developed before the year 2000 used only the last two digits of a year to sort dates, always assuming the first two digits were 19. Consequently, these programs sort dates out of order. Check with your software manufacturer to see if any updates are available. Many software manufacturers make updates available from the World Wide Web.

Software does not work as expected

Symptom: Software does not work as expected.

Actions:

- Most software programs have built-in help systems that provide instructions for most tasks. If you are having difficulty performing a specific task within a software program, refer to the help system for that program. Help systems are typically accessible from a menu or button in the program, and frequently from the F1 key.
- If you are having difficulty with the Windows operating system or one of its components, refer to the Windows help system. It is accessible from the Windows **Start** menu.
- To determine if problems are caused by newly installed software, verify that:
  - Your computer has the minimum memory requirements needed to use the software. See the information supplied with the software to verify memory requirements. (If you just installed an adapter or memory, you might have a memory-address conflict.)
  - The software is designed to operate on your computer.
  - Other software works on your computer.
  - The software you are using works correctly on another computer.
- If you received any error messages while using the software program, see the printed documentation supplied with the software or the help system for that software for a description of the messages and solutions to the problem.

- Check with your software manufacturer to see if any updates are available. Many software manufacturers make updates available from the World Wide Web.
- If the software program used to work correctly, but does not work correctly now, do the following:
  - On the Windows 7 operating system, click **Start → Control Panel → System and Security → System → System Protection → System Restore**. Then, follow the instructions on the screen.
  - On the Windows 8 or Windows 8.1 operating system, open Control Panel and click **System and Security → System → System Protection → System Restore**. Then, follow the instructions on the screen.

    Note: For detailed information on how to open Control Panel on Windows 8 and Windows 8.1, see "Accessing Lenovo programs on the Windows 8 or Windows 8.1 operating system" on page 7.
- If you are unable to resolve the problem through other methods, uninstall the software program and reinstall it.

If these actions do not correct the problem, you might need technical assistance. Contact your software manufacturer or see Chapter 11 "Getting information, help, and service" on page 111 for details.

USB problems

Symptom: The USB connectors cannot be accessed.

Actions:

- Make sure that the USB cable is securely connected to the USB connector and to the USB device. If the USB device has its own power cord, make sure that it is attached to a properly grounded electrical outlet.
- If the USB device has its own On/Off switch, make sure that it is in the On position.
- If the USB device has an Online switch, make sure that it is in the Online position.
- If the USB device is a printer, make sure that paper is loaded correctly.
- Make sure any device drivers or other software supplied with the USB device is correctly installed. Refer to the documentation for the USB device.
- Reset the device by detaching and reattaching the USB connector.

If these actions do not correct the problem, run the diagnostic programs to test the USB connector (see "Diagnostic programs" on page 108 for instructions). If the USB device came with its own diagnostics, run those diagnostics against the USB device. If you need technical assistance, see Chapter 11 "Getting information, help, and service" on page 111.

Diagnostic programs

Diagnostic programs are used to test hardware components of your computer. Diagnostic programs can also report operating-system-controlled settings that interfere with the correct operation of your computer. You can use the preinstalled diagnostic program to diagnose computer problems, if your computer is running the Windows operating system.

Notes:

1. Depending on the date when your computer was manufactured, your computer is preinstalled with either the Lenovo Solution Center program or the Lenovo ThinkVantage Toolbox program for diagnostic purposes. For more information about the Lenovo ThinkVantage Toolbox program, see "Lenovo ThinkVantage Toolbox" on page 109. For more information about the Lenovo Solution Center program, see "Lenovo Solution Center" on page 109.

2. You can also download the PC-Doctor for DOS diagnostic program from http://www.lenovo.com/support. See “PC-Doctor for DOS” on page 109 for detailed information.
3. If you are unable to isolate and repair the problem yourself after running the programs, save and print the log files created by the programs. You will need the log files when you speak to a Lenovo technical support representative.

Lenovo Solution Center

The Lenovo Solution Center program enables you to troubleshoot and resolve computer problems. It combines diagnostic tests, system information collection, security status, and support information, along with hints and tips for maximum system performance.

Notes:

- The Lenovo Solution Center program can be downloaded from http://www.lenovo.com/diags.
- If you are using a Windows operating system other than Windows 7, Windows 8, or Windows 8.1, go to http://www.lenovo.com/diags for the latest information on diagnostics for your computer.

To run the Lenovo Solution Center program, see “Lenovo programs” on page 5.

For additional information, refer to the Lenovo Solution Center help system.

Note: If you are unable to isolate and repair the problem yourself after running the program, save and print the log files. You will need the log files when you speak to a Lenovo technical support representative.

Lenovo ThinkVantage Toolbox

The Lenovo ThinkVantage Toolbox program helps you maintain your computer, improve computing security, diagnose computer problems, get familiar with the innovative technologies provided by Lenovo, and get more information about your computer. You can use the diagnostics feature of the Lenovo ThinkVantage Toolbox program to test devices, diagnose computer problems, create bootable diagnostic media, update system drivers, and view system information.

To run the Lenovo ThinkVantage Toolbox program on the Windows 7 operating system, click **Start → All Programs → Lenovo ThinkVantage Tools → System Health and Diagnostics**. Follow the instructions on the screen.

Follow the instructions on the screen. For additional information, refer to the Lenovo ThinkVantage Toolbox help system.

PC-Doctor for DOS

You can also download the latest version of the PC-Doctor for DOS diagnostic program from http://support.lenovo.com. The PC-Doctor for DOS diagnostic program runs independently of the Windows operating system. Use the PC-Doctor for DOS diagnostic program if you are unable to start the Windows operating system or if the two diagnostic programs preinstalled on your computer have not been successful in isolating a possible problem. You can run the PC-Doctor for DOS diagnostic program from a diagnostic disc that you created.

Creating a diagnostic disc

This section provides instructions on how to create a diagnostic disc.

To create a diagnostic disc, do the following:

1. Download a self-starting bootable CD/DVD image (known as an ISO image) of the diagnostic program from:
   http://support.lenovo.com
2. Use any CD/DVD burning software to create a diagnostic disc with the ISO image.

Running the diagnostic program from a diagnostic disc

This section provides instructions on how to run the diagnostic program from a diagnostic disc that you created.

To run the diagnostic program from a diagnostic disc that you created, do the following:

1. Make sure the optical drive that you want to use is set as the first boot device in the startup device sequence. See “Selecting or changing the startup device sequence” on page 80.
2. Make sure that the computer is turned on and then insert the disc into the optical drive. The diagnostic program opens.

   Note: You can insert the disc into the optical drive when you are setting the startup device sequence. However, if you insert the disc into the optical drive when you have already entered the operating system, you need to restart the computer to access the diagnostic program.
3. Follow the instructions on the screen to select the diagnostic test you want to run.

   Note: For additional help, press the F1 key.
4. Remove the diagnostic disc from the optical drive when you complete the diagnostic process.

Chapter 11. Getting information, help, and service

This chapter contains information about help, service, and technical assistance for products manufactured by Lenovo.

Information resources

You can use the information in this section to access useful resources relating to your computing needs.

Lenovo ThinkVantage Tools

The Lenovo ThinkVantage Tools program guides you to a host of information sources and provides easy access to various tools to help you work more easily and securely.

To access the Lenovo ThinkVantage Tools program, click **Start → All Programs → Lenovo ThinkVantage Tools**.

Lenovo Welcome

The Lenovo Welcome program introduces you to some innovative built-in features of Lenovo and guides you through a few important setup tasks to help you make the most of your computer.

Help and Support

The Windows Help and Support information system guides you to various help and support information from Lenovo and Microsoft, such as updating drivers, accessing programs, and accessing user manuals.

To access the Windows Help and Support information system, do one of the following:

- On the Windows 7 operating system, click **Start → Help and Support**.
- On the Windows 8 or Windows 8.1 operating system, move the pointer to the top-right or bottom-right corner of the screen to display the charms. Then click **Settings → Help**.

Safety and Warranty

The *Safety, Warranty, and Setup Guide* that is provided with your computer contains information on safety, setup, warranty, and notices. Read and understand all safety information before using this product.

Lenovo Web site

The Lenovo Web site (http://www.lenovo.com) provides up-to-date information and services to help you buy, upgrade, and maintain your computer. You can also do the following:

- Shop for desktop and notebook computers, monitors, projectors, upgrades, and accessories for your computer, and special offers.
- Purchase additional services, such as support for hardware, operating systems, application programs, network setup and configuration, and custom installations.
- Purchase upgrades and extended hardware repair services.
- Download the latest device drivers and software updates for your computer model.
- Access the online manuals for your products.
- Access the Lenovo Limited Warranty.

© Copyright Lenovo 2013

- Access troubleshooting and support information for your computer model and other supported products.
- Find the service and support phone numbers for your country or region.
- Find a Service Provider located near you.

Lenovo Support Web site

Technical support information is available on the Lenovo Support Web site at:
http://www.lenovo.com/support

This Web site is updated with the latest support information such as the following:

- Drivers and software
- Diagnostic solutions
- Product and service warranty
- Product and parts details
- User guides and manuals
- Knowledge base and frequently asked questions

Help and service

This section contains information about obtaining help and service.

Using the documentation and diagnostic programs

If you experience a problem with your computer, see Chapter 10 “Troubleshooting and diagnostics” on page 91. For information on additional resources to help you troubleshoot your computer problem, see “Information resources” on page 111.

If you suspect a software problem, see the documentation that comes with the operating system or software program, including readme files and online help.

Most computers come with a set of diagnostic programs that help you identify hardware problems. For instructions on using the diagnostic programs, see “Diagnostic programs” on page 108.

You can also get the latest technical information and download device drivers and updates from Lenovo Support Web site at:
http://support.lenovo.com

Calling for service

During the warranty period, you can get help and information by telephone through the Customer Support Center.

The following services are available during the warranty period:

- **Problem determination** - Trained service personnel are available to assist you with determining a hardware problem and deciding what action is necessary to fix the problem.
- **Hardware repair** - If the problem is caused by hardware under warranty, trained service personnel are available to provide the applicable level of service.
- **Engineering Change management** - There might be changes that are required after a product has been sold. Lenovo or your reseller will make selected Engineering Changes (ECs) that apply to your hardware available.

These items are not covered by the warranty:
- Replacement or use of parts not manufactured for or by Lenovo or non-warranted Lenovo parts
- Identification of software problem sources
- Configuration of BIOS as part of an installation or upgrade
- Changes, modifications, or upgrades to device drivers
- Installation and maintenance of network operating systems (NOS)
- Installation and maintenance of application programs

Refer to the *Safety, Warranty, and Setup Guide* that comes with your computer for information about your warranty type and duration. You must retain your proof of purchase to obtain warranty service.

For a list of the Lenovo Support phone numbers for your country or region, go to http://www.lenovo.com/support/phone or refer to the *Safety, Warranty, and Setup Guide* that comes with your computer.

Note: Phone numbers are subject to change without notice. If the number for your country or region is not provided, contact your Lenovo reseller or Lenovo marketing representative.

If possible, be at your computer when you call. Have the following information available:
- Machine type and model
- Serial numbers of your hardware products
- Description of the problem
- Exact wording of any error messages
- Hardware and software configuration information

Using other services

If you travel with your computer or relocate it to a country where your desktop or notebook computer machine type is sold, your computer might be eligible for International Warranty Service, which automatically entitles you to obtain warranty service throughout the warranty period. Service will be performed by service providers authorized to perform warranty service.

Service methods and procedures vary by country, and some services might not be available in all countries. International Warranty Service is delivered through the method of service (such as depot, carry-in, or on-site service) that is provided in the servicing country. Service centers in certain countries might not be able to service all models of a particular machine type. In some countries, fees and restrictions might apply at the time of service.

To determine whether your computer is eligible for International Warranty Service and to view a list of the countries where service is available, go to http://support.lenovo.com, click **Product & Service Warranty**, and follow the instructions on the screen.

For technical assistance with the installation of or questions related to Service Packs for your preinstalled Microsoft Windows product, refer to the Microsoft Product Support Services Web site at http://support.microsoft.com/directory or you can contact the Customer Support Center. Some fees might apply.

Purchasing additional services

During and after the warranty period, you can purchase additional services, such as support for hardware, operating systems, and application programs; network setup and configuration services; upgraded or extended hardware repair services; and custom installation services. Service availability and service name might vary by country or region. For more information about these services, go to the Lenovo Web site at: http://www.lenovo.com

Appendix A. Notices

Lenovo may not offer the products, services, or features discussed in this document in all countries. Consult your local Lenovo representative for information on the products and services currently available in your area. Any reference to a Lenovo product, program, or service is not intended to state or imply that only that Lenovo product, program, or service may be used. Any functionally equivalent product, program, or service that does not infringe any Lenovo intellectual property right may be used instead. However, it is the user's responsibility to evaluate and verify the operation of any other product, program, or service.

Lenovo may have patents or pending patent applications covering subject matter described in this document. The furnishing of this document does not give you any license to these patents. You can send license inquiries, in writing, to:

Lenovo (United States), Inc.
1009 Think Place - Building One
Morrisville, NC 27560
U.S.A.
Attention: Lenovo Director of Licensing

LENOVO PROVIDES THIS PUBLICATION “AS IS” WITHOUT WARRANTY OF ANY KIND, EITHER EXPRESS OR IMPLIED, INCLUDING, BUT NOT LIMITED TO, THE IMPLIED WARRANTIES OF NON-INFRINGEMENT, MERCHANTABILITY OR FITNESS FOR A PARTICULAR PURPOSE. Some jurisdictions do not allow disclaimer of express or implied warranties in certain transactions, therefore, this statement may not apply to you.

This information could include technical inaccuracies or typographical errors. Changes are periodically made to the information herein; these changes will be incorporated in new editions of the publication. Lenovo may make improvements and/or changes in the product(s) and/or the program(s) described in this publication at any time without notice.

The products described in this document are not intended for use in implantation or other life support applications where malfunction may result in injury or death to persons. The information contained in this document does not affect or change Lenovo product specifications or warranties. Nothing in this document shall operate as an express or implied license or indemnity under the intellectual property rights of Lenovo or third parties. All information contained in this document was obtained in specific environments and is presented as an illustration. The result obtained in other operating environments may vary.

Lenovo may use or distribute any of the information you supply in any way it believes appropriate without incurring any obligation to you.

Any references in this publication to non-Lenovo Web sites are provided for convenience only and do not in any manner serve as an endorsement of those Web sites. The materials at those Web sites are not part of the materials for this Lenovo product, and use of those Web sites is at your own risk.

Any performance data contained herein was determined in a controlled environment. Therefore, the result obtained in other operating environments may vary significantly. Some measurements may have been made on development-level systems and there is no guarantee that these measurements will be the same on generally available systems. Furthermore, some measurements may have been estimated through extrapolation. Actual results may vary. Users of this document should verify the applicable data for their specific environment.

© Copyright Lenovo 2013

Trademarks

The following terms are trademarks of Lenovo in the United States, other countries, or both:

Lenovo
The Lenovo logo
Rescue and Recovery
ThinkCentre
ThinkVantage

Microsoft, Windows, and Windows Media are trademarks of the Microsoft group of companies.

Celeron, Intel, Intel Core, and Pentium are trademarks of Intel Corporation in the U.S. and/or other countries.

Linux is a registered trademark of Linus Torvalds.

Other company, product, or service names may be trademarks or service marks of others.

Appendix B. Regulatory information

Export classification notice

This product is subject to the United States Export Administration Regulations (EAR) and has an Export Classification Control Number (ECCN) of 4A994.b. It can be re-exported except to any of the embargoed countries in the EAR E1 country list.

Television output notice

The following notice applies to models that have the factory-installed television-output feature.

This product incorporates copyright protection technology that is protected by method claims of certain U.S. patents and other intellectual property rights owned by Macrovision Corporation and other rights owners. Use of this copyright protection technology must be authorized by Macrovision Corporation, and is intended for home and other limited viewing uses only unless otherwise authorized by Macrovision Corporation. Reverse engineering or disassembly is prohibited.

Electronic emissions notices

The following information refers to Lenovo personal computer machine types 10AS, and 10AV.

Federal Communications Commission Declaration of Conformity

This equipment has been tested and found to comply with the limits for a Class B digital device, pursuant to Part 15 of the FCC Rules. These limits are designed to provide reasonable protection against harmful interference in a residential installation. This equipment generates, uses, and can radiate radio frequency energy and, if not installed and used in accordance with the instructions, may cause harmful interference to radio communications. However, there is no guarantee that interference will not occur in a particular installation. If this equipment does cause harmful interference to radio or television reception, which can be determined by turning the equipment off and on, the user is encouraged to try to correct the interference by one or more of the following measures:

- Reorient or relocate the receiving antenna.
- Increase the separation between the equipment and receiver.
- Connect the equipment into an outlet on a circuit different from that to which the receiver is connected.
- Consult an authorized dealer or service representative for help.

Lenovo is not responsible for any radio or television interference caused by using other than specified or recommended cables and connectors or by unauthorized changes or modifications to this equipment. Unauthorized changes or modifications could void the user's authority to operate the equipment.

This device complies with Part 15 of the FCC Rules. Operation is subject to the following two conditions: (1) this device may not cause harmful interference, and (2) this device must accept any interference received, including interference that may cause undesired operation.

Responsible Party:
Lenovo (United States) Incorporated
1009 Think Place - Building One
Morrisville, NC 27560
Phone Number: 919-294-5900

© Copyright Lenovo 2013

Industry Canada Class B emission compliance statement

This Class B digital apparatus complies with Canadian ICES-003.

Cet appareil numérique de la classe B est conforme à la norme NMB-003 du Canada.

European Union - Compliance to the Electromagnetic Compatibility Directive

This product is in conformity with the protection requirements of EU Council Directive 2004/108/EC on the approximation of the laws of the Member States relating to electromagnetic compatibility. Lenovo cannot accept responsibility for any failure to satisfy the protection requirements resulting from a non-recommended modification of the product, including the installation of option cards from other manufacturers.

This product has been tested and found to comply with the limits for Class B Information Technology Equipment according to European Standard EN 55022. The limits for Class B equipment were derived for typical residential environments to provide reasonable protection against interference with licensed communication devices.

Lenovo, Einsteinova 21, 851 01 Bratislava, Slovakia

German Class B compliance statement

Deutschsprachiger EU Hinweis:

Hinweis für Geräte der Klasse B EU-Richtlinie zur Elektromagnetischen Verträglichkeit
Dieses Produkt entspricht den Schutzanforderungen der EU-Richtlinie 2004/108/EG (früher 89/336/EWG) zur Angleichung der Rechtsvorschriften über die elektromagnetische Verträglichkeit in den EU-Mitgliedsstaaten und hält die Grenzwerte der EN 55022 Klasse B ein.

Um dieses sicherzustellen, sind die Geräte wie in den Handbüchern beschrieben zu installieren und zu betreiben. Des Weiteren dürfen auch nur von der Lenovo empfohlene Kabel angeschlossen werden. Lenovo übernimmt keine Verantwortung für die Einhaltung der Schutzanforderungen, wenn das Produkt ohne Zustimmung der Lenovo verändert bzw. wenn Erweiterungskomponenten von Fremdherstellern ohne Empfehlung der Lenovo gesteckt/eingebaut werden.

Deutschland:

Einhaltung des Gesetzes über die elektromagnetische Verträglichkeit von Betriebsmitteln
Dieses Produkt entspricht dem „Gesetz über die elektromagnetische Verträglichkeit von Betriebsmitteln“ EMVG (früher „Gesetz über die elektromagnetische Verträglichkeit von Geräten“). Dies ist die Umsetzung der EU-Richtlinie 2004/108/EG (früher 89/336/EWG) in der Bundesrepublik Deutschland.

Zulassungsbescheinigung laut dem Deutschen Gesetz über die elektromagnetische Verträglichkeit von Betriebsmitteln, EMVG vom 20. Juli 2007 (früher Gesetz über die elektromagnetische Verträglichkeit von Geräten), bzw. der EMV EG Richtlinie 2004/108/EC (früher 89/336/EWG), für Geräte der Klasse B.

Dieses Gerät ist berechtigt, in Übereinstimmung mit dem Deutschen EMVG das EG-Konformitätszeichen - CE - zu führen. Verantwortlich für die Konformitätserklärung nach Paragraf 5 des EMVG ist die Lenovo (Deutschland) GmbH, Gropiusplatz 10, D-70563 Stuttgart.

Informationen in Hinsicht EMVG Paragraf 4 Abs. (1) 4:
Das Gerät erfüllt die Schutzanforderungen nach EN 55024 und EN 55022 Klasse B.

Korea Class B compliance statement

B급 기기(가정용 방송통신기자재)
이 기기는 가정용(B급) 전자파적합기기로서 주로 가정에서 사용하는 것을 목적으로 하며, 모든 지역에서 사용할 수 있습니다

Japan VCCI Class B compliance statement

この装置は, クラスB情報技術装置です。 この装置は, 家庭環境で使用することを目的としていますが, この装置がラジオやテレビジョン受信機に近接して使用されると, 受信障害を引き起こすことがあります。
取扱説明書に従って正しい取り扱いをして下さい。 VCCI-B

Japan compliance statement for products which connect to the power mains with rated current less than or equal to 20 A per phase

日本の定格電流が 20A/相 以下の機器に対する高調波電流規制
高調波電流規格 JIS C 61000-3-2 適合品

Lenovo product service information for Taiwan

台灣 Lenovo 產品服務資訊如下：
荷蘭商聯想股份有限公司台灣分公司
台北市信義區信義路五段七號十九樓之一
服務電話：0800-000-702

Keyboard and mouse compliance statement for Taiwan

本產品隨貨附已取得經濟部標準檢驗局認可之PS/2或USB的鍵盤與滑鼠一組

Eurasian compliance mark

EAC

Additional regulatory information

For additional regulatory information, refer to the *Regulatory Notice* shipped with your computer. Depending on the configuration of your computer and the country or region where the computer was purchased, you might have received additional printed regulatory notices. All regulatory notices are available on the Lenovo Support Web site in electronic format. To access electronic copies of the documentation, go to http://support.lenovo.com and click **User Guides & Manuals**.

Appendix C. WEEE and recycling information

Lenovo encourages owners of information technology (IT) equipment to responsibly recycle their equipment when it is no longer needed. Lenovo offers a variety of programs and services to assist equipment owners in recycling their IT products. For information on recycling Lenovo products, go to: http://www.lenovo.com/recycling

Important WEEE information

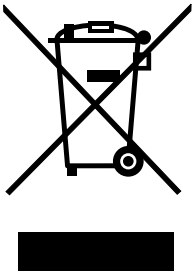

The WEEE marking on Lenovo products applies to countries with WEEE and e-waste regulations (for example, European Directive 2002/96/EC, India E-Waste Management & Handling Rules, 2011). Appliances are labeled in accordance with local regulations concerning waste electrical and electronic equipment (WEEE). These regulations determine the framework for the return and recycling of used appliances as applicable within each geography. This label is applied to various products to indicate that the product is not to be thrown away, but rather put in the established collection systems for reclaiming these end of life products.

Users of electrical and electronic equipment (EEE) with the WEEE marking must not dispose of end of life EEE as unsorted municipal waste, but use the collection framework available to them for the return, recycle, and recovery of WEEE and to minimize any potential effects of EEE on the environment and human health due to the presence of hazardous substances. For additional WEEE information go to: http://www.lenovo.com/recycling

Recycling information for Japan

Collecting and recycling a disused Lenovo computer or monitor

If you are a company employee and need to dispose of a Lenovo computer or monitor that is the property of the company, you must do so in accordance with the Law for Promotion of Effective Utilization of Resources. Computers and monitors are categorized as industrial waste and should be properly disposed of by an industrial waste disposal contractor certified by a local government. In accordance with the Law for Promotion of Effective Utilization of Resources, Lenovo Japan provides, through its PC Collecting and Recycling Services, for the collecting, reuse, and recycling of disused computers and monitors. For details, visit the Lenovo Web site at http://www.lenovo.com/recycling/japan. Pursuant to the Law for Promotion of Effective Utilization of Resources, the collecting and recycling of home-used computers and monitors by the manufacturer was begun on October 1, 2003. This service is provided free of charge for home-used computers sold after October 1, 2003. For details, visit the Lenovo Web site at http://www.lenovo.com/recycling/japan.

Disposing of Lenovo computer components

© Copyright Lenovo 2013

Some Lenovo computer products sold in Japan may have components that contain heavy metals or other environmental sensitive substances. To properly dispose of disused components, such as a printed circuit board or drive, use the methods described above for collecting and recycling a disused computer or monitor.

Disposing of disused lithium batteries from Lenovo computers

A button-shaped lithium battery is installed on the system board of your Lenovo computer to provide power to the computer clock while the computer is off or disconnected from the main power source. If you want to replace it with a new one, contact your place of purchase or ask for a repair service provided by Lenovo. If you have replaced it by yourself and want to dispose of the disused lithium battery, insulate it with vinyl tape, contact your place of purchase, and follow their instructions. If you use a Lenovo computer at home and need to dispose of a lithium battery, you must comply with local ordinances and regulations.

Recycling information for Brazil

Declarações de Reciclagem no Brasil

Descarte de um Produto Lenovo Fora de Uso

Equipamentos elétricos e eletrônicos não devem ser descartados em lixo comum, mas enviados à pontos de coleta, autorizados pelo fabricante do produto para que sejam encaminhados e processados por empresas especializadas no manuseio de resíduos industriais, devidamente certificadas pelos orgãos ambientais, de acordo com a legislação local.

A Lenovo possui um canal específico para auxiliá-lo no descarte desses produtos. Caso você possua um produto Lenovo em situação de descarte, ligue para o nosso SAC ou encaminhe um e-mail para: reciclar@lenovo.com, informando o modelo, número de série e cidade, a fim de enviarmos as instruções para o correto descarte do seu produto Lenovo.

Battery recycling information for Taiwan



廢電池請回收

Battery recycling information for the European Union

EU

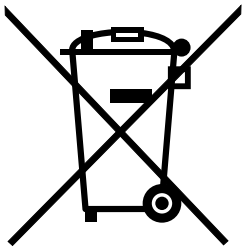

Notice: This mark applies only to countries within the European Union (EU).

Batteries or packaging for batteries are labeled in accordance with European Directive 2006/66/EC concerning batteries and accumulators and waste batteries and accumulators. The Directive determines the framework for the return and recycling of used batteries and accumulators as applicable throughout the European Union. This label is applied to various batteries to indicate that the battery is not to be thrown away, but rather reclaimed upon end of life per this Directive.

In accordance with the European Directive 2006/66/EC, batteries and accumulators are labeled to indicate that they are to be collected separately and recycled at end of life. The label on the battery may also include a chemical symbol for the metal concerned in the battery (Pb for lead, Hg for mercury, and Cd for cadmium). Users of batteries and accumulators must not dispose of batteries and accumulators as unsorted municipal waste, but use the collection framework available to customers for the return, recycling, and treatment of batteries and accumulators. Customer participation is important to minimize any potential effects of batteries and accumulators on the environment and human health due to the potential presence of hazardous substances. For proper collection and treatment, go to:
http://www.lenovo.com/recycling

Appendix D. Restriction of Hazardous Substances Directive (RoHS)

European Union RoHS

Lenovo products sold in the European Union, on or after 3 January 2013 meet the requirements of Directive 2011/65/EU on the restriction of the use of certain hazardous substances in electrical and electronic equipment (“RoHS recast” or “RoHS 2”).

For more information about Lenovo progress on RoHS, go to:
http://www.lenovo.com/social_responsibility/us/en/RoHS_Communication.pdf

China RoHS

产品中有毒有害物质或元素的名称及含量

部件名称	有毒有害物质或元素					
	铅(Pb)	汞(Hg)	镉(Cd)	六价铬 (Cr(VI))	多溴连苯 (PBB)	多溴二苯醚 (PBDE)
印刷电路板组件*	X	O	O	O	O	O
硬盘	X	O	O	O	O	O
光驱	X	O	O	O	O	O
内存	X	O	O	O	O	O
电脑I/O 附件	X	O	O	O	O	O
电源	X	O	O	O	O	O
键盘	X	O	O	O	O	O
鼠标	X	O	O	O	O	O
机箱/ 附件	X	O	O	O	O	O

○:表示该有毒有害物质在该部件所有均质材料中的含量均在SJ/T11363-2006 标准规定的限量要求以下
×:表示该有毒有害物质至少在该部件的某一均质材料中的含量超出SJ/T11363-2006 标准规定的限量要求
表中标有"×"的所有部件都符合欧盟RoHS 法规.

印刷电路板组件*: 包括印刷电路板及其零部件、电容和连接器
根据型号的不同，可能不会含有以上的所有部件，请以实际购买机型为准



在中华人民共和国境内销售的电子信息产品必须标识此标志，标志内的数字代表在正常使用状态下的产品的环保使用期限

Turkish RoHS

The Lenovo product meets the requirements of the Republic of Turkey Directive on the Restriction of the Use of Certain Hazardous Substances in Electrical and Electronic Equipment (EEE).

Türkiye EEE Yönetmeliğine Uygunluk Beyanı

Bu Lenovo ürünü, T.C. Çevre ve Orman Bakanlığı'nın “Elektrik ve Elektronik Eşyalarda Bazı Zararlı Maddelerin Kullanımının Sınırlandırılmasına Dair Yönetmelik (EEE)” direktiflerine uygundur.

EEE Yönetmeliğine Uygundur.

© Copyright Lenovo 2013

Ukraine RoHS

Цим підтверджуємо, що продукція Леново відповідає вимогам нормативних актів України, які обмежують вміст небезпечних речовин

India RoHS

RoHS compliant as per E-Waste (Management & Handling) Rules, 2011.

Appendix E. China Energy Label

微型计算机能效标识声明

为满足中国《微型计算机能源效率标识实施规则》和《微型计算机能效限定值及能效等级》的相关规定和要求，联想公司对其生产及销售的每一台微型计算机产品加施能效标识，声明如下：

1. 如果您的包装箱或者产品上贴有下图所示的标识，您所购买的机器就是经测试符合《微型计算机能效限定值及能效等级》规定的相应能效等级的产品。

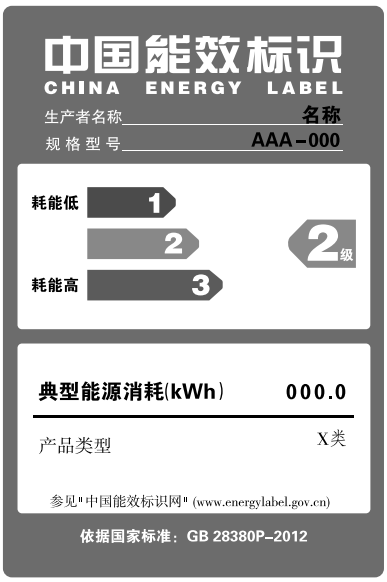

Note: 上图以2级能效标贴模板为例进行说明，具体规格型号、能效等级、产品类别和典型能源消耗等信息请以包装箱或产品上粘贴的实际能效等级标贴提供的信息为准，也可登陆“中国能效标识网”http://www.energylabel.gov.cn进行详细查询。

2. 如果您所购买机器的包装箱或者产品无上图所示的标识，请您忽略此部分。

《微型计算机能源效率标识实施规则》和《微型计算机能效限定值及能效等级》是由国家发展改革委员会所推行的能效标识制度，旨在通过开发节能产品和有效的节能方式来保护环境。通过使用符合能效标识制度要求的产品可以减少电源消耗、有助于节省开支、营造更清洁的环境并降低温室气体排放量。

联想很荣幸能为用户提供符合相应能效等级设计要求的产品，也鼓励用户购买高能效的产品。

有关能效标识制度的更多信息，请访问“中国能效标识网”http://www.energylabel.gov.cn。

© Copyright Lenovo 2013

Index

A

a rescue medium, creating and using 72
Administrator, password 78
audio line-in connector 10
audio line-out connector 10
audio subsystem 1

B

backup and recovery operations 70
basic troubleshooting 91
battery, replacing 43
boot-block recovery 84

C

cable lock, security 31
changing
  password 78
  startup device sequence 80
cleaning an optical mouse 87
CMOS, clearing 79
components, internal 11
computer cover
  removing 36
computer cover, reinstalling 67
connector 10
connectors
  rear 10
connectors, controls, indicators
  front 9
considerations, passwords 78
creating
  and using a rescue medium 72
creating and using
  recovery media 69
CRU
  completing the installation 67
customer support center 112

D

deleting a password 78
Description 10
device drivers 68
devices, handling static-sensitive 35
diagnostics programs, using 112
diagnostics, troubleshooting 91
DisplayPort connector 10
documentation, using 112
drivers, device 68
drives
  bays 13
  specifications 13

E

environment, operating 5
Ethernet 2
Ethernet connector 10
exiting, Setup Utility 81
expansion 3
external options, installing 35

F

failure, recovering from POST/BIOS 84
features 1
flashing the BIOS 83
front
  connectors, controls, indicators 9
front audio and USB assembly, replacing 54
front bezel
  front bezel, removing 37
front bezel, reinstalling 37
front WiFi antenna, installing, removing 64

G

getting
  help 111
  information 111
  service 111

H

hard disk drive, replacing 44
heat sink and fan assembly, replacing 50
help
  and service 112
  getting 111
Help and Support 111

I

important safety information v
information
  getting 111
  important safety v
  resources 111
  safety 111
  warranty 111
Input/Output (I/O) features 3
installing options
  memory module 41
  PCI Express card 38
internal drives 1

© Copyright Lenovo 2013

K

keyboard, replacing 66

L

Lenovo Solution Center 109
Lenovo ThinkVantage Toolbox 109
Lenovo ThinkVantage Tools 111
Lenovo Welcome 111
locating components 11

M

media, creating and using recovery media 69
memory module
  installing, replacing 41
  system board 41
Microphone connector 11
microprocessor
  replacing 52
mouse, replacing 66

N

notices 115

O

operations, backup and recovery 70
optical drive, replacing 46
optical mouse
  cleaning 87

P

parts replacement, completing 67
password
  Administrator 78
  considerations 78
  Power-On Password 78
  setting, changing, deleting 78
passwords
  erasing 79
  lost or forgotten 79
passwords, using 77
PCI Express card 38
  installing, replacing 38
  slots 38
physical specifications 5
power
  features 3
power supply assembly, replacing 48
power-on self-test (POST) 83
Power-On, Password 78
programs, updating system 83
purchasing additional services 113

R

rear connectors 10
rear fan assembly, replacing 55
rear WiFi antenna, installing, removing 63
recovering
  from a POST/BIOS update failure 84
  software 69
recovery
  boot-block 84
  operations, backup and 70
  problems, solving 74
recovery media, creating and using 69
removing computer cover 36
replacing
  battery 43
  hard disk drive 44
  heat sink and fan assembly 50
  microprocessor 52
Rescue and Recovery 69
  workspace, Rescue and Recovery 71
Rescue and Recovery workspace 71
resources, information 111

S

safety v
safety information 111
security
  cable lock 31
  enabling or disabling 79
  features 3
selecting
  startup device 80
  temporary startup device 80
service
  and help 112
  customer support center 112
  getting 111
services
  other 113
  purchasing additional 113
setting
  password 78
settings
  changing 77
  viewing 77
Setup Utility 77
Setup Utility program, starting 77
Setup Utility, exiting 81
software
  recovering 69
solving recovery problems 74
starting the Setup Utility program 77
startup device 80
  sequence, changing 80
  temporary, selecting 80
static-sensitive devices, handling 35
system
  management 2
  programs 83

system board
connectors 12
locating parts 12
locations 12
memory module 41

T

temporary startup device 80
the BIOS, updating (flashing) 83–84
trademarks 116
troubleshooting, basic 91
troubleshooting, diagnostics 91

U

updating
(flashing) the BIOS 83
system programs 83
updating (flashing) the BIOS 84
USB connector 11
using
a rescue medium, creating and 72
diagnostic programs 112
documentation 112
other services 113
passwords 77
Setup Utility 77

V

VGA monitor connector 11
video subsystem 1
viewing and changing settings 77

W

warranty information 111
WiFi units, WiFi adapter card, WiFi card module, WiFi antenna cable, replacing 57
workspace, backup and recovery 71

© Copyright Lenovo 2013

