KITZ

"Jso"

The reliable brand

# KITZ Trunnion Mounted Ball Valves

Three Pieces Split Body and Cap, Soft Seated, Steel Ball Valves
Successfully Fire-tested

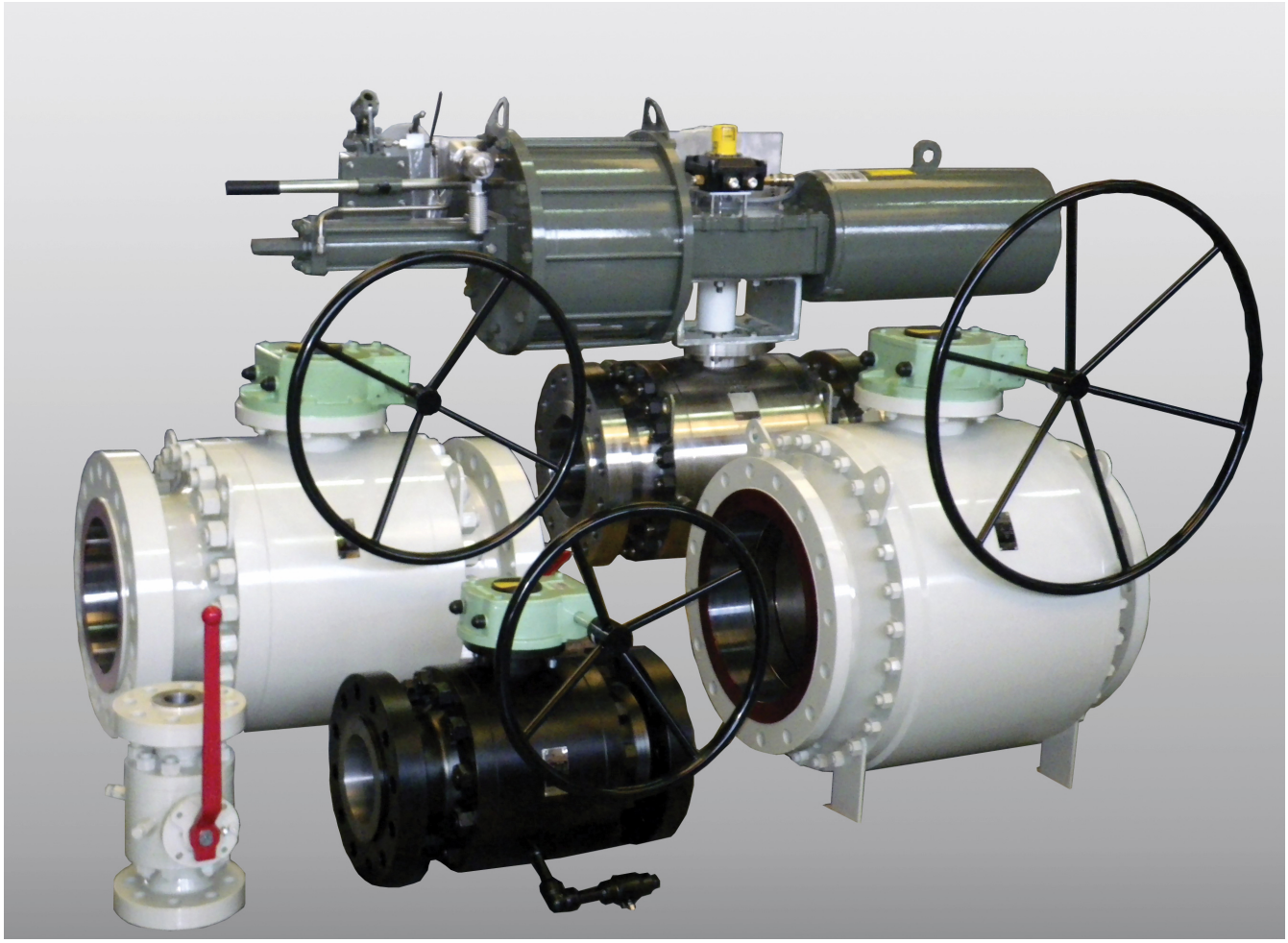

**KITZ CORPORATION OF EUROPE S.A.**

## KNOW-HOW

Experience in high performance ball valves for:

- Oil & Gas Terminals
- Oil & Gas Pipelines
- Petrochemical Plants
- Chemical Plants
- Refineries
- Loading Stations

## QUALITY-SYSTEM

- ISO 9001-2008
- API Q1 Specification
- Pressure equipment directive (PED 97/23/EC)












## PRODUCTION FACILITIES

- Machining and assembling facility
- High pressure test bench
- Painting cabin

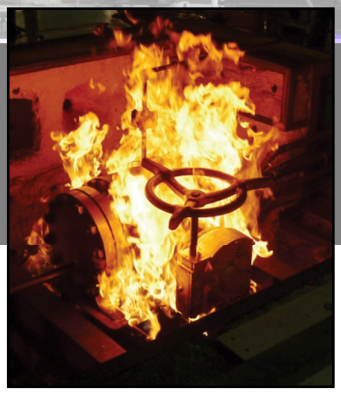



## ENGINEERING DEPARTMENT

- Structural and material design
- Product analysis and evaluation
- Functional and safe production test

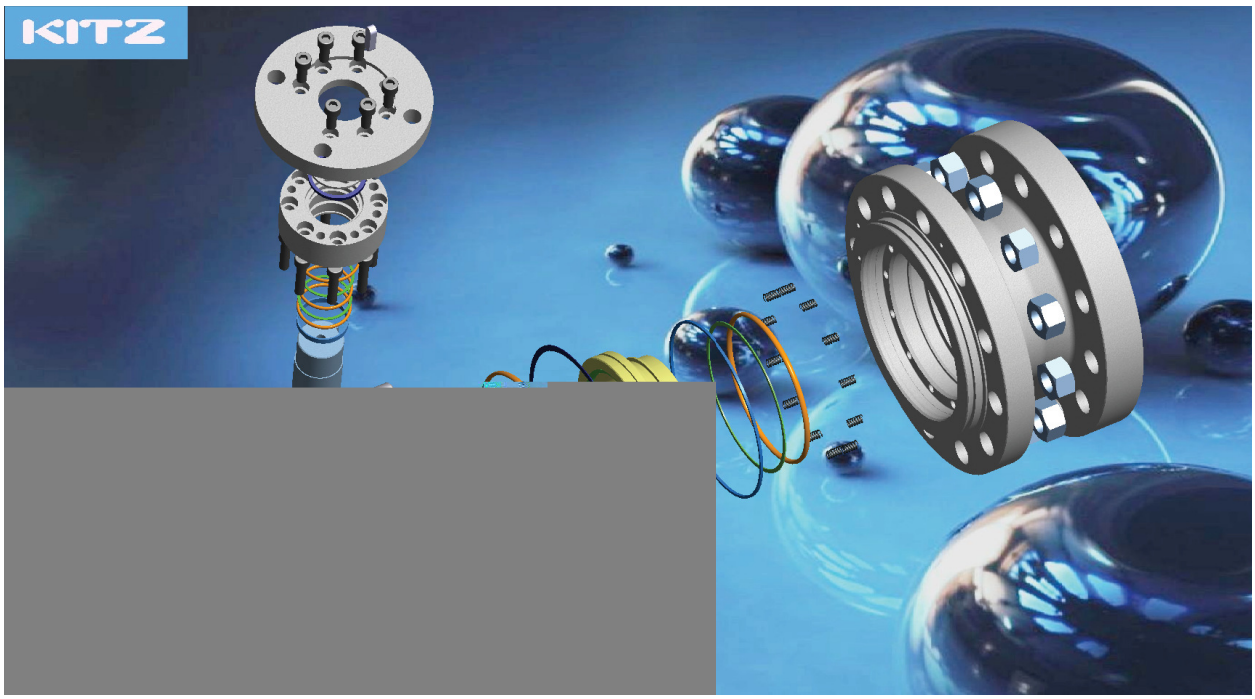

# TRUNNION MOUNTED BALL VALVE
# SERIES F18TK/T60

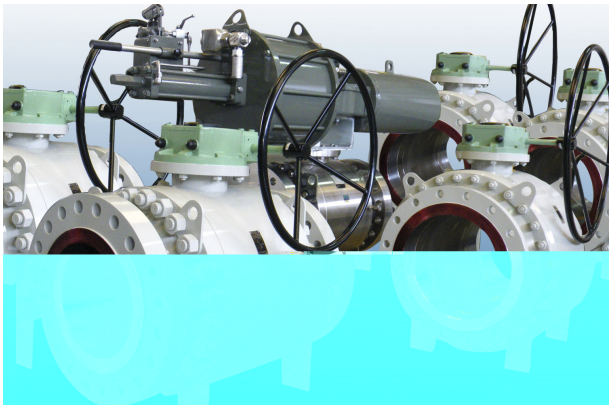

Trunnion mounted side entry steel ball valves are designed to meet API 6D / ISO 14313 and other referential international valve design standards, used for petroleum, petrochemical, oil, gas and any industrial.

## GENERAL DESIGN STANDARD

- Design: API 6D / ISO 14313
- Face to face: API 6D / ASME B16.10
- End connection: ASME B16.5
- Bore diameter: API 6D / ISO 14313
- Wall thickness: ASME B16.34

## DESIGN FEATURE

- Structure: 3 pieces bolted body and cap
- High shut-off sealing mechanism and low torque operation
- Block and bleed function
- Self cavity pressure relief
- Fire safe design
- Blow out proof stem construction
- Anti static design
- Locking device (for lever handle operation)
- ISO 5211 actuator mounting
- Emergency grease injection (option)
- PN design can be available

## PRODUCT RANGE

- Nominal pressure : Class 150 to 2500
- Nominal size : NPS 1 to 24
- Shell materials :
  Carbon and low alloy steel, Austenite Stainless steel, Duplex stainless steel, High alloy steel, Nickel based alloy
- Seat materials :
  Reinforced PTFE, Modified PTFE, Nylon 6, Nylon 12, DEVLON, PCTFE, PEEK

## OPTION

- NACE MR 0175 available
- Pneumatic and electric actuator
- Thru-conduit piggability bore
- Grease injection point for seat and stem
- Stem extension

## CERTIFICATION

- PED 97/23/EC
- Fire Test : ISO 10497-2010 / API 607 5th
- ATEX 94/9/EC



## HIGH SHUT-OFF SEALING MECHANISM

A floating seat design is employed so that each of the upstream and downstream seats is adequately maintained in contact with the ball by means of a seat spring. Line pressure helps this contact method. It features excellent sealing performance independently on both side seats at the same time.

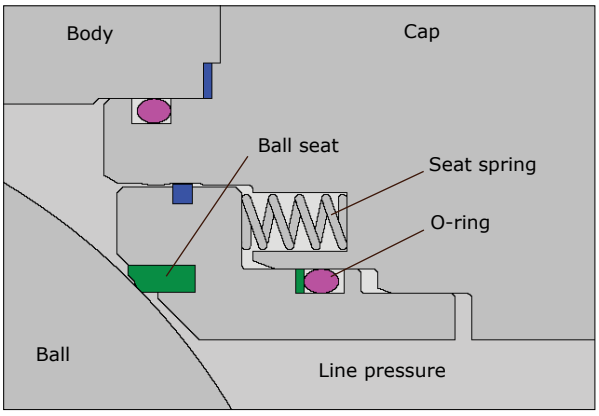


## BLOCK AND BLEED FUNCTION

Ball seats shut off the line fluid independently on the upstream and downstream side of the ball. The valve bore and the body cavity are isolated from each other when the valve is fully opened or closed so that the residue within the body cavity may be disposed through the drain or vent port provided on the lowed and upper of the valve body. The drain and vent plug provide bleed valve to prevent blow out plug by internal pressure for safety when drain or vent plug is removed under pressurized condition in the cavity mistakenly. The design prevents fluid contamination within the valve interior and easily detects seat leakage from both flow directions, without dismantling the valve from the pipeline.

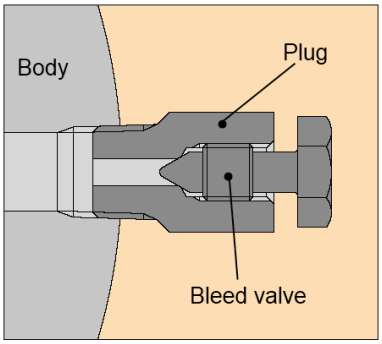


## FIRE SAFE DESIGN

1) Internal leakage prevention

When resilient sealing materials are decomposed or deteriorated by a plant fire, the edge of the metal seat retainer preloaded by the seat spring comes into contact with the ball to shut off the line fluid to minimize internal leakage through the valve bore. The seat retainer also compresses KITZ originally designed flexible graphite retainer packings to prevent fluid leakage from between the valve body and the seat retainer.

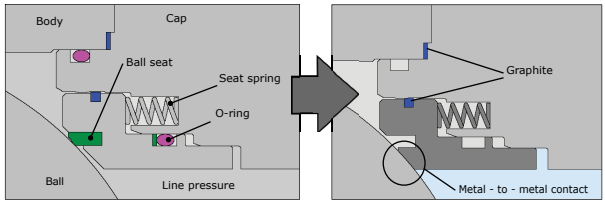


Before After

2) External leakage prevention

Leakage from the valve stem area is prevented by double sealing with O-ring and flexible graphite gland packings. Leakage through the valve body joint is also protected by double sealing with O-rings and flexible graphite gaskets. After a fire has deteriorated O-rings, flexible graphite packings and gaskets are the measure that prevents external fluid leakage.

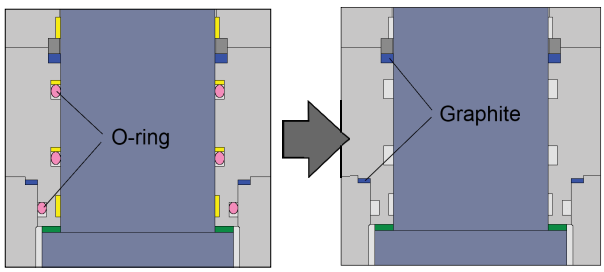


Before After

## CAVITY PRESSURE RELIEF

In case of unusually high increase of servicing or ambient temperature, liquefied gas or highly volatile liquid trapped within the body cavity may evaporate, and cause an excessive rise in the cavity pressure. For safety considerations, a provision is made so that when the cavity pressure exceeds the line pressure, the ball seat will move slightly away from the ball surface to relieve the excessive cavity pressure into the valve bore.

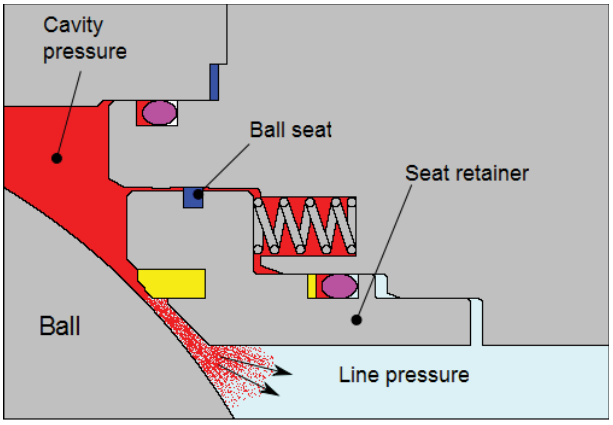


## ANTI STATIC DESIGN

A spring between the stem and the ball or between the stem and the bonnet permits electrical continuity between all valve components.

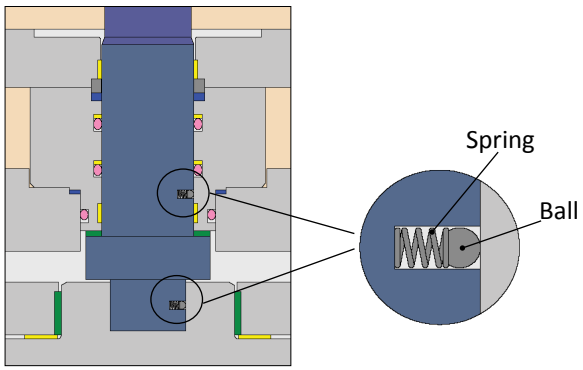


## EMERGENCY GREASE INJECTION (OP)

For accidental leakage from the ball seat or stem sealing area, a sealant supply mechanism may be provided as an option. Should the sealing material be damaged or decomposed by fire or other accidental causes, leakage can be temporarily prevented by injection of the sealant into this mechanism.

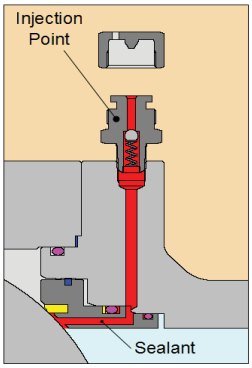


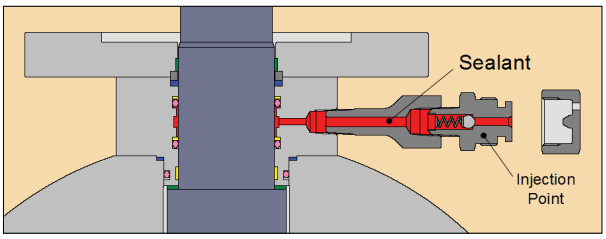


## THRU-CONDUIT PIGGABILITY BORE (OP)

Besides the standard full bore, the custom sized thru-conduit bore is optionally available for use of pipeline scrapers or cleaning pigs.

## STEM EXTENSION (OP)

An optional stem extension design is available for underground or remote valve operation. Specify the dimension between the center of the valve bore and the center of the valve operator. Valve operating medium such as electric and pneumatic actuators are also optionally available.

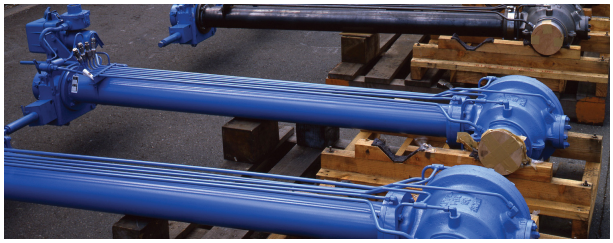

*OP: Option

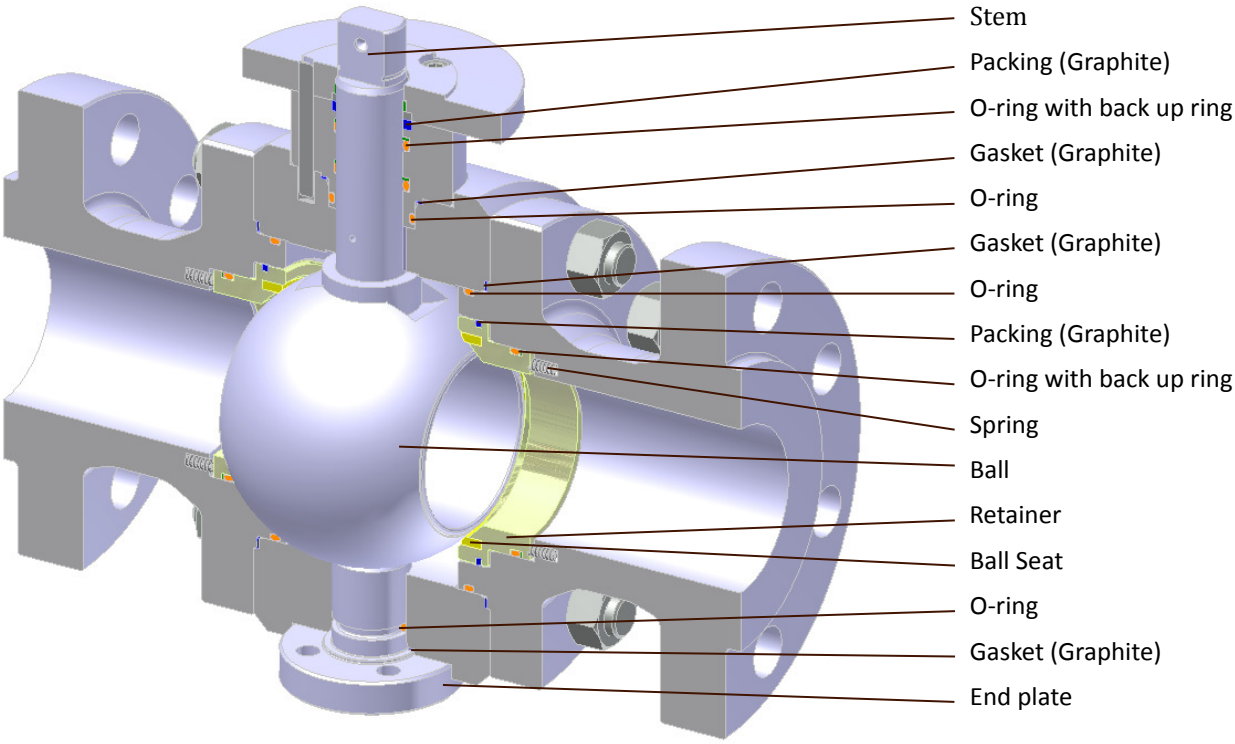


This illustration shows typical construction for size up to NPS 4

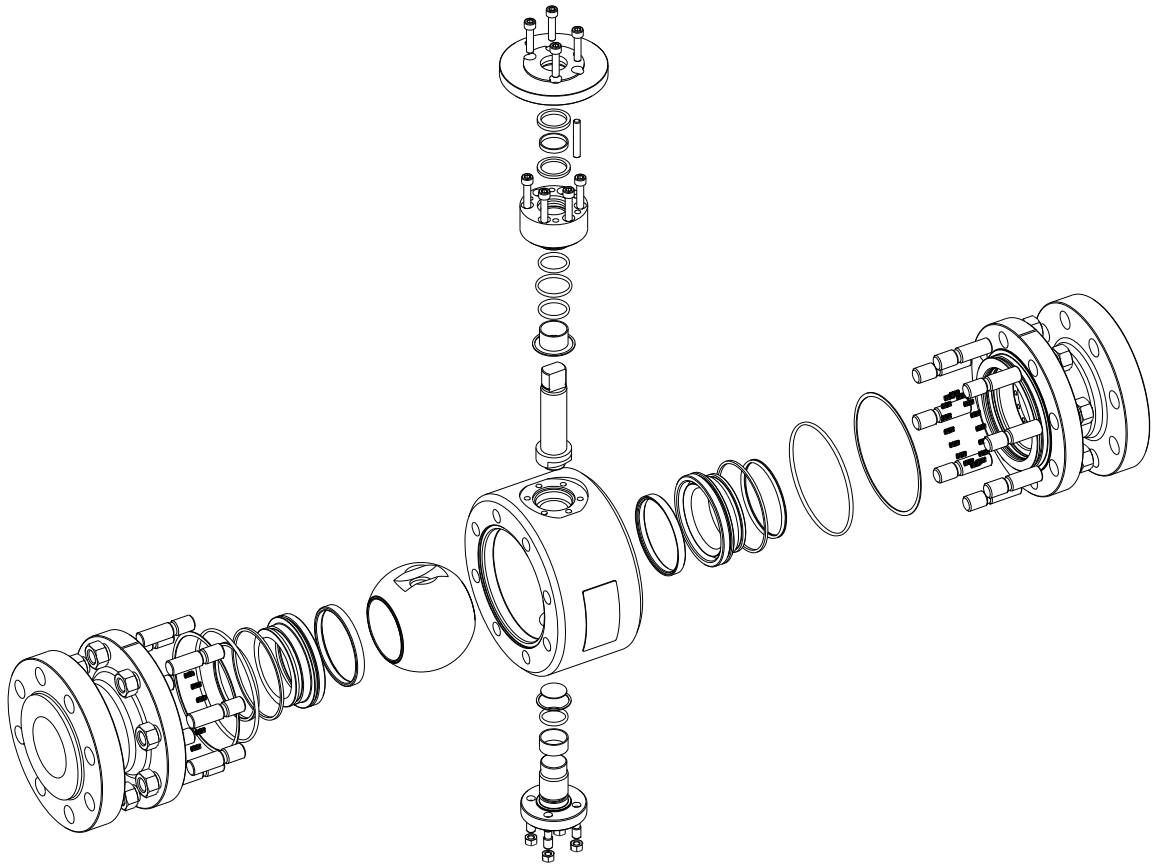

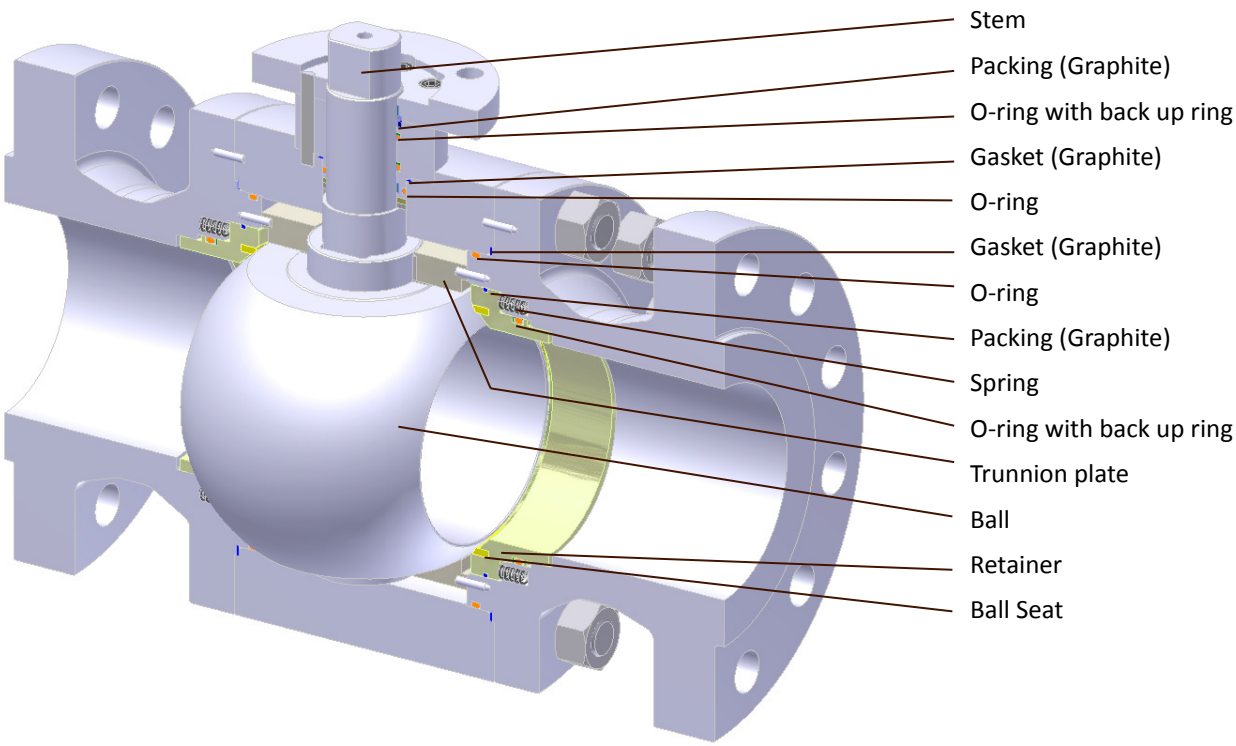


This illustration shows typical construction for size NPS 6 and larger

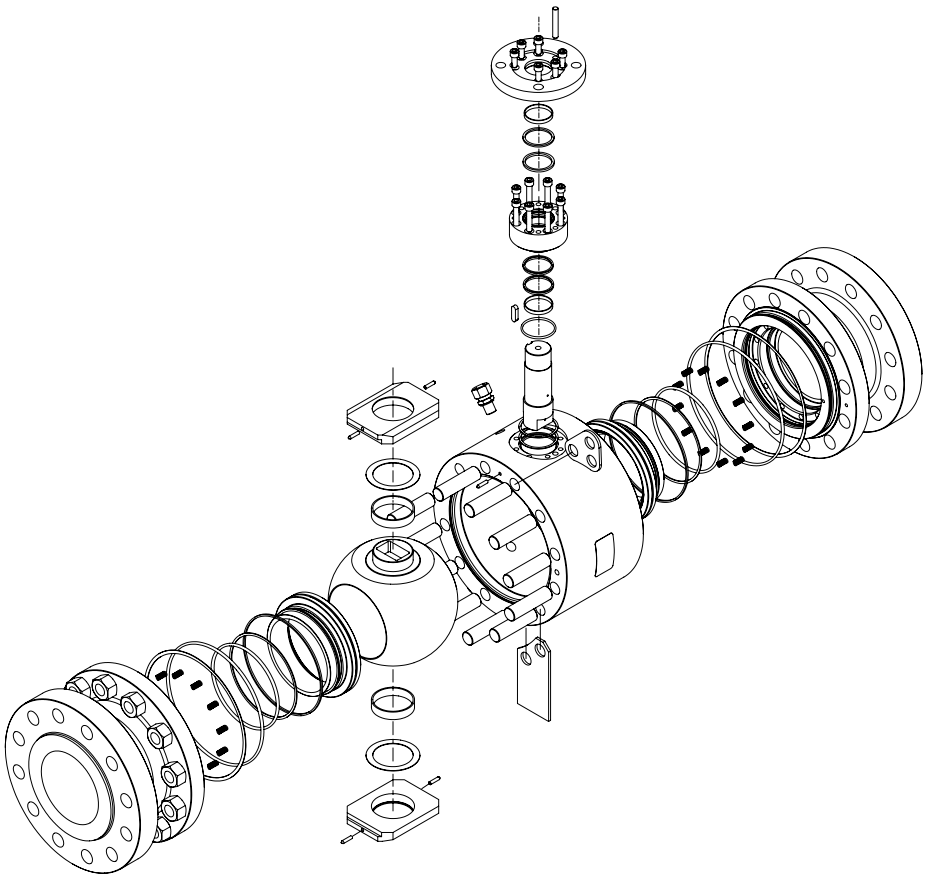

| Item | Un-corrosive | Low temp. | Corrosive | Sour service | |
|---|---|---|---|---|---|
| Body | A105 | LF2 | F316 or 316 | F51 or S31803 | F55 or S32760 |
| Cap | A105 | LF2 | F316 or 316 | F51 or S31803 | F55 or S32760 |
| Ball | 13Cr or A105+ENP | 316 or LF2+ENP | F316 or 316 | F51 or S31803 | F55 or S32760 |
| Stem | 13Cr or 630 | 316 or 630 | 316 or S31803 | S31803 | S32760 |
| Bottom stem | A105 | LF2 | 316 | S31803 | S32760 |
| Retainer | A105+ENP | LF2+ENP | 316 | S31803 | S32760 |
| Trunnion | A105 or WCB | LF2 or LCB | 316 or CF8M | S31803 or CD3MN | S32760 or CD3MWCuN |
| Bonnet | A105 | LF2 | 316 | S31803 | S32760 |
| Gland plate | A105 | LF2 | 316 | 316 | 316 |
| Spring | AISI 301 | AISI 301 | Inconel X750 | Inconel X750 | Inconel X750 |
| Bearing | CS+PTFE | CS+PTFE | 316SS+PTFE | N06625 +PTFE | N06625 +PTFE |
| Bolt / Nut | B7 / 2H | L7 / 4 | B8 / 8 | B8 / 8 | B8 / 8 |
| O-ring | HNBR | L-NBR | FKM | FKM | FKM |
| Seat | R-PTFE (class up to 600) | | | | |
| | Nylon 6 (class 900 and over) | | | | |

unit [mm]

## PRESSURE - TEMPERATURE RATING

The pressure-temperature rating of soft seated ball valve are determined, not only by the valve shell materials, but also by the sealing materials used for ball seat, gland packings, O-rings, flange gaskets and bearings. Sealing materials may be high molecule, or rubber, but the choice is limited by characteristics of the service fluid, working pressures, fluid velocity, and operational frequency of the valve.

As it is very difficult to predetermine the exact pressure-temperature ratings for all kinds of fluid under all imaginable conditions, general rating charts have been provided for non-shock fluid service below, based on KITZ past experiences both in the field and in KITZ laboratory. Frequent need of maintenance is another factor to be kept in mind, if very high temperature operation is planned or expected.

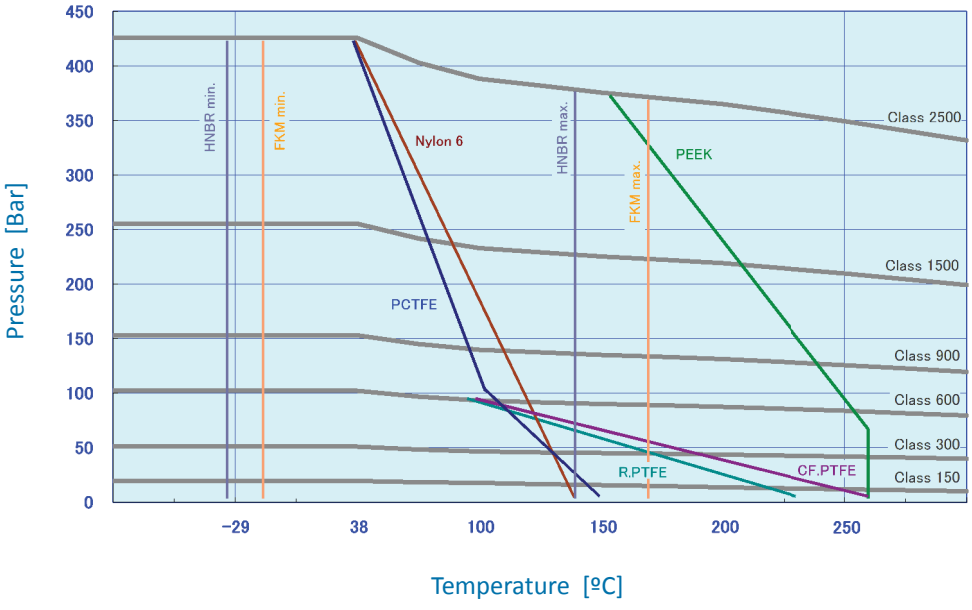

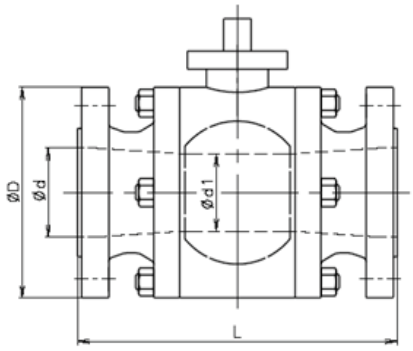


Class 150

| SIZE | d | d1 | D | L | | |
|---|---|---|---|---|---|---|
| | | | | RF | WE | RJ |
| 2 | 49 | 49 | 150 | 178 | 216 | 191 |
| 3 x 2 | 74 | 49 | 190 | 203 | 283 | 216 |
| 3 | 74 | 74 | 190 | 203 | 283 | 216 |
| 4 x 3 | 100 | 74 | 230 | 229 | 305 | 241 |
| 4 | 100 | 100 | 230 | 229 | 305 | 241 |
| 6 x 4 | 150 | 100 | 280 | 394 | 457 | 406 |
| 6 | 150 | 150 | 280 | 394 | 457 | 406 |
| 8 x 6 | 201 | 150 | 345 | 457 | 521 | 470 |
| 8 | 201 | 201 | 345 | 457 | 521 | 470 |
| 10 x 8 | 252 | 201 | 405 | 533 | 559 | 546 |
| 10 | 252 | 252 | 405 | 533 | 559 | 546 |
| 12 x 10 | 303 | 252 | 485 | 610 | 635 | 622 |
| 12 | 303 | 303 | 485 | 610 | 635 | 622 |
| 14 x 10 | 334 | 252 | 535 | 686 | 762 | 699 |
| 14 x 12 | 334 | 303 | 535 | 686 | 762 | 699 |
| 14 | 334 | 334 | 535 | 686 | 762 | 699 |
| 16 x 12 | 385 | 303 | 595 | 762 | 838 | 775 |
| 16 x 14 | 385 | 334 | 595 | 762 | 838 | 775 |
| 16 | 385 | 385 | 595 | 762 | 838 | 775 |
| 18 x 14 | 436 | 334 | 635 | 864 | 914 | 876 |
| 18 x 16 | 436 | 385 | 635 | 864 | 914 | 876 |
| 18 | 436 | 436 | 635 | 864 | 914 | 876 |
| 20 x 16 | 487 | 385 | 700 | 914 | 991 | 927 |
| 20 x 18 | 487 | 436 | 700 | 914 | 991 | 927 |
| 20 | 487 | 487 | 700 | 914 | 991 | 927 |
| 22 x 18 | 538 | 436 | 750 | 1016 | 1092 | 1029 |
| 22 x 20 | 538 | 487 | 750 | 1016 | 1092 | 1029 |
| 22 | 538 | 538 | 750 | 1016 | 1092 | 1029 |
| 24 x 20 | 589 | 487 | 815 | 1067 | 1143 | 1080 |
| 24 | 589 | 589 | 815 | 1067 | 1143 | 1080 |

unit [mm]

Class 300

| SIZE | d | d1 | D | L | | |
|---|---|---|---|---|---|---|
| | | | | RF | WE | RJ |
| 2 | 49 | 49 | 165 | 216 | 216 | 232 |
| 3 x 2 | 74 | 49 | 210 | 283 | 283 | 298 |
| 3 | 74 | 74 | 210 | 283 | 283 | 298 |
| 4 x 3 | 100 | 74 | 255 | 305 | 305 | 321 |
| 4 | 100 | 100 | 255 | 305 | 305 | 321 |
| 6 x 4 | 150 | 100 | 320 | 403 | 457 | 419 |
| 6 | 150 | 150 | 320 | 403 | 457 | 419 |
| 8 x 6 | 201 | 150 | 380 | 502 | 521 | 518 |
| 8 | 201 | 201 | 380 | 502 | 521 | 518 |
| 10 x 8 | 252 | 201 | 445 | 568 | 559 | 584 |
| 10 | 252 | 252 | 445 | 568 | 559 | 584 |
| 12 x 10 | 303 | 252 | 520 | 648 | 635 | 664 |
| 12 | 303 | 303 | 520 | 648 | 635 | 664 |
| 14 x 10 | 334 | 252 | 585 | 762 | 762 | 778 |
| 14 x 12 | 334 | 303 | 585 | 762 | 762 | 778 |
| 14 | 334 | 334 | 585 | 762 | 762 | 778 |
| 16 x 12 | 385 | 303 | 650 | 838 | 838 | 854 |
| 16 x 14 | 385 | 334 | 650 | 838 | 838 | 854 |
| 16 | 385 | 385 | 650 | 838 | 838 | 854 |
| 18 x 14 | 436 | 334 | 710 | 914 | 914 | 930 |
| 18 x 16 | 436 | 385 | 710 | 914 | 914 | 930 |
| 18 | 436 | 436 | 710 | 914 | 914 | 930 |
| 20 x 16 | 487 | 385 | 775 | 991 | 991 | 1010 |
| 20 x 18 | 487 | 436 | 775 | 991 | 991 | 1010 |
| 20 | 487 | 487 | 775 | 991 | 991 | 1010 |
| 22 x 18 | 538 | 436 | 840 | 1092 | 1092 | 1114 |
| 22 x 20 | 538 | 487 | 840 | 1092 | 1092 | 1114 |
| 22 | 538 | 538 | 840 | 1092 | 1092 | 1114 |
| 24 x 20 | 589 | 487 | 915 | 1143 | 1143 | 1165 |
| 24 | 589 | 589 | 915 | 1143 | 1143 | 1165 |

unit [mm]

PN designed valves can be available. Ask product range and dimensions.

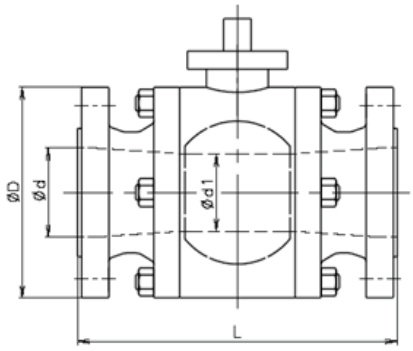


## Class 600

| SIZE | d | d1 | D | L | | |
|---|---|---|---|---|---|---|
| | | | | RF | WE | RJ |
| 2 | 49 | 49 | 165 | 292 | 292 | 295 |
| 3 x 2 | 74 | 49 | 210 | 356 | 356 | 359 |
| 3 | 74 | 74 | 210 | 356 | 356 | 359 |
| 4 x 3 | 100 | 74 | 275 | 432 | 432 | 435 |
| 4 | 100 | 100 | 275 | 432 | 432 | 435 |
| 6 x 4 | 150 | 100 | 355 | 559 | 559 | 562 |
| 6 | 150 | 150 | 355 | 559 | 559 | 562 |
| 8 x 6 | 201 | 150 | 420 | 660 | 660 | 664 |
| 8 | 201 | 201 | 420 | 660 | 660 | 664 |
| 10 x 8 | 252 | 201 | 510 | 787 | 787 | 791 |
| 10 | 252 | 252 | 510 | 787 | 787 | 791 |
| 12 x 10 | 303 | 252 | 560 | 838 | 838 | 841 |
| 12 | 303 | 303 | 560 | 838 | 838 | 841 |
| 14 x 10 | 334 | 252 | 605 | 889 | 889 | 892 |
| 14 x 12 | 334 | 303 | 605 | 889 | 889 | 892 |
| 14 | 334 | 334 | 605 | 889 | 889 | 892 |
| 16 x 12 | 385 | 303 | 685 | 991 | 991 | 994 |
| 16 x 14 | 385 | 334 | 685 | 991 | 991 | 994 |
| 16 | 385 | 385 | 685 | 991 | 991 | 994 |
| 18 x 14 | 436 | 334 | 745 | 1092 | 1092 | 1095 |
| 18 x 16 | 436 | 385 | 745 | 1092 | 1092 | 1095 |
| 18 | 436 | 436 | 745 | 1092 | 1092 | 1095 |
| 20 x 16 | 487 | 385 | 815 | 1194 | 1194 | 1200 |
| 20 x 18 | 487 | 436 | 815 | 1194 | 1194 | 1200 |
| 20 | 487 | 487 | 815 | 1194 | 1194 | 1200 |
| 24 x 20 | 589 | 487 | 940 | 1397 | 1397 | 1407 |
| 24 | 589 | 589 | 940 | 1397 | 1397 | 1407 |

unit [mm]

## Class 900

| SIZE | d | d1 | D | L | | |
|---|---|---|---|---|---|---|
| | | | | RF | WE | RJ |
| 1/2 | 13 | 13 | 120 | 216 | 216 | 216 |
| 3/4 x 1/2 | 19 | 13 | 130 | 229 | 229 | 229 |
| 3/4 | 19 | 19 | 130 | 229 | 229 | 229 |
| 1 x 3/4 | 25 | 19 | 150 | 254 | 254 | 254 |
| 1 | 25 | 25 | 150 | 254 | 254 | 254 |
| 11/2 x 1 | 38 | 25 | 180 | 305 | 305 | 305 |
| 11/2 | 38 | 38 | 180 | 305 | 305 | 305 |
| 2 x 11/2 | 49 | 38 | 215 | 368 | 368 | 371 |
| 2 | 49 | 49 | 215 | 368 | 368 | 371 |
| 3 x 2 | 74 | 49 | 240 | 381 | 381 | 384 |
| 3 | 74 | 74 | 240 | 381 | 381 | 384 |
| 4 x 3 | 100 | 74 | 290 | 457 | 457 | 460 |
| 4 | 100 | 100 | 290 | 457 | 457 | 460 |
| 6 x 4 | 150 | 100 | 380 | 610 | 610 | 613 |
| 6 | 150 | 150 | 380 | 610 | 610 | 613 |
| 8 x 6 | 201 | 150 | 470 | 737 | 737 | 740 |
| 8 | 201 | 201 | 470 | 737 | 737 | 740 |
| 10 x 8 | 252 | 201 | 545 | 838 | 838 | 841 |
| 10 | 252 | 252 | 545 | 838 | 838 | 841 |
| 12 x 10 | 303 | 252 | 610 | 965 | 965 | 968 |
| 12 | 303 | 303 | 610 | 965 | 965 | 968 |
| 14 x 10 | 322 | 252 | 640 | 1029 | 1029 | 1038 |
| 14 x 12 | 322 | 303 | 640 | 1029 | 1029 | 1038 |
| 14 | 322 | 322 | 640 | 1029 | 1029 | 1038 |
| 16 x 14 | 373 | 322 | 705 | 1130 | 1130 | 1140 |
| 16 | 373 | 373 | 705 | 1130 | 1130 | 1140 |

unit [mm]

PN designed valves can be available. Ask product range and dimensions.

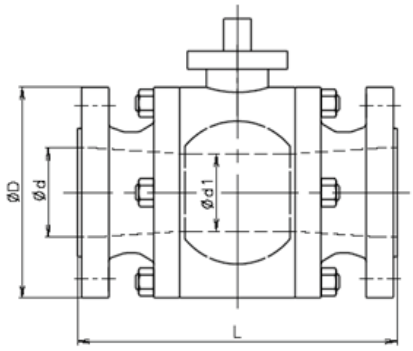


Class 1500

| SIZE | d | d1 | D | L | | |
|---|---|---|---|---|---|---|
| | | | | RF | WE | RJ |
| 1/2 | 13 | 13 | 120 | 216 | 216 | 216 |
| 3/4 x 1/2 | 19 | 13 | 130 | 229 | 229 | 229 |
| 3/4 | 19 | 19 | 130 | 229 | 229 | 229 |
| 1 x 3/4 | 25 | 19 | 150 | 254 | 254 | 254 |
| 1 | 25 | 25 | 150 | 254 | 254 | 254 |
| 11/2 x 1 | 38 | 25 | 180 | 305 | 305 | 305 |
| 11/2 | 38 | 38 | 180 | 305 | 305 | 305 |
| 2 x 11/2 | 49 | 38 | 215 | 368 | 368 | 371 |
| 2 | 49 | 49 | 215 | 368 | 368 | 371 |
| 3 x 2 | 74 | 49 | 265 | 470 | 470 | 473 |
| 3 | 74 | 74 | 265 | 470 | 470 | 473 |
| 4 x 3 | 100 | 74 | 310 | 546 | 546 | 549 |
| 4 | 100 | 100 | 310 | 546 | 546 | 549 |
| 6 x 4 | 144 | 100 | 395 | 705 | 705 | 711 |
| 6 | 144 | 144 | 395 | 705 | 705 | 711 |
| 8 x 6 | 192 | 144 | 485 | 832 | 832 | 841 |
| 8 | 192 | 192 | 485 | 832 | 832 | 841 |
| 10 x 8 | 239 | 192 | 585 | 991 | 991 | 1000 |
| 10 | 239 | 239 | 585 | 991 | 991 | 1000 |
| 12 x 10 | 303 | 239 | 675 | 1130 | 1130 | 1146 |
| 12 | 303 | 303 | 675 | 1130 | 1130 | 1146 |
| 14 x 10 | 334 | 239 | 750 | 1257 | 1257 | 1276 |
| 14 x 12 | 334 | 303 | 750 | 1257 | 1257 | 1276 |
| 14 | 334 | 334 | 750 | 1257 | 1257 | 1276 |

unit [mm]

Class 2500

| SIZE | d | d1 | D | L | | |
|---|---|---|---|---|---|---|
| | | | | RF | WE | RJ |
| 1/2 | 13 | 13 | 135 | 264 | 264 | 264 |
| 3/4 x 1/2 | 19 | 13 | 140 | 273 | 273 | 273 |
| 3/4 | 19 | 19 | 140 | 273 | 273 | 273 |
| 1 x 3/4 | 25 | 19 | 160 | 308 | 308 | 308 |
| 1 | 25 | 25 | 160 | 308 | 308 | 308 |
| 11/2 x 1 | 38 | 25 | 205 | 384 | 384 | 387 |
| 11/2 | 38 | 38 | 205 | 384 | 384 | 387 |
| 2 x 11/2 | 42 | 38 | 235 | 451 | 451 | 454 |
| 2 | 42 | 42 | 235 | 451 | 451 | 454 |
| 3 x 2 | 62 | 42 | 305 | 578 | 578 | 584 |
| 3 | 62 | 62 | 305 | 578 | 578 | 584 |
| 4 x 3 | 87 | 62 | 355 | 673 | 673 | 683 |
| 4 | 87 | 87 | 355 | 673 | 673 | 683 |
| 6 x 4 | 131 | 87 | 485 | 914 | 914 | 927 |
| 6 | 131 | 131 | 485 | 914 | 914 | 927 |
| 8 x 6 | 179 | 131 | 550 | 1022 | 1022 | 1038 |

unit [mm]

PN designed valves can be available. Ask product range and dimensions.

# CAUTION

Pressure-temperature ratings and other performance data published in this catalog have been developed from our design calculation, in-house testing, field reports provided by our customers and/or published official standards or specifications. They are good only to cover typical applications as a general guideline to users of KITZ products introduced in this catalog.

For any specific application, users are kindly requested to contact KITZ Corporation of Europe for technical advice, or to carry out their own study and evaluation for proving suitability of these products to such an application. Failure to follow this request could result in property damage and/or personal injury, for which we shall not be liable.

While this catalog has been compiled with the utmost care, we assume no responsibility for errors, impropriety or inadequacy. Any information provided in this catalog is subject to from time-to-time change without notice for error rectification, product discontinuation, design modification, new product introduction or any other cause that KITZ Corporation of Europe considers necessary. This edition cancels all previous issues.

Kitz Corporation of Europe S.A.
Ramón Viñas, 8
08930 Sant Adrià de Besòs
Barcelona
Spain - España
Ph. +34 93 462 14 08
Fax. +34 93 462 03 49
www.kitzeurope.com