Vacon frequency converters

Vacon CX/CXL/CXS frequency converters cover the power range 0,55 kW – 1,5 MW, at 230/400/500/690 V 3-phase input and motor voltages. Vacon frequency converters carry the CE mark and comply with the strictest EMC (radio interference) directives of the EU.

High tolerance to electromagnetic disturbances and a low emission level have been achieved by using a protected chassis with built-in AC-choke, RFI filter and other tested and simulated solutions. The input choke also significantly decreases the total harmonic currents (THD) generated by the frequency converter.

The highly sophisticated Open Loop Vector Control, the fast ASIC circuit and the direct 3-phase current measurement guarantee accurate motor control and make the frequency converter suitable for very demanding uses. The comprehensive manual, versatile control panels and flexible PC tools make the use of Vacon frequency converters easy in all applications. The standard product series is complemented by cabinet, regenerative and common DC-bus solutions plus a wide range of options.

Reliable technology

Vacon CX/CXL/CXS frequency converters are manufactured according to international standards for the global market with traditional expertise based upon years of experience.

- Only the best solutions, components and subcontractors are accepted
- The number of components and subcontractors is kept to a minimum.
- Each frequency converter is subjected to a final test in extreme conditions.
- Wide range of protective functions.
- Locked parameters ensure safety during operation.
- All CX/CXL/CXS frequency converters share the same control principle, software, options and control panel. In addition, the CX and CXL series have the same control board.
- Converters bigger than 110 kW use the same set of spare parts.
- A test report accompanies every frequency converter delivered.
- ISO9001 certificate.

The average mean time before failure (MTBF) of a frequency converter is more than 500 000 operating hours. In urgent cases our worldwide service network and 24-hour on-call service in Vaasa will help you.



Small, easy to use but still powerful

The Vacon frequency converter is small and therefore physically fits all systems.

- Slim, space-saving "bookshelf" design
- Side by side installation
- Super Cooling technology
- Big drives can also be wallmounted

The "Five in One+" precision applications have been designed to make the frequency converter easy to use in different applications. Apart from the simple basic application, the following applications are available:

- Standard Application
- Local/Remote Control Application
- Multi-step Speed Control Application
- PI-control Application
- Multi-purpose Control Application
- Pump and Fan Control Application (also with Autochange)
- Several customized applications

User-friendly

Vacon frequency converters are extremely easy to operate.

- Comprehensive manuals in more than 20 languages
- Due to the "Five in One+" precision applications the number of parameter settings is minimized
- The PC tools and manuals are also available on the internet (www.vacon.com)
- Easy-to-use control panels (Alphanumeric panel as standard or full-graphical panel as option)
- Panel operation is the same for all power ratings
- Smart preset parameters: just enter the information from the motor rating plate, Vacon does the rest
- Simple connections, I/O connections with quick terminals
- RS232C terminal for PC-connection (FCLoad, FCDrive and FC1131-3 Engineering programs)
- The sizing of the frequency converter is done in the same way for all CX, CXL and CXS versions.
- Fieldbus options for all common bus systems (Interbus-S, Profibus DP, CAN, LonWorks, Modbus etc.)

Advanced motor control

The heart of the motor control of the Vacon is based on sensorless vector control with an adaptive motor model and a highly developed ASIC circuit. The vector control is done in a system of stator flux co-ordinates. The control is not sensitive to changes in the parameters of the motor and neither does it need demanding and complicated calculations requiring great calculation capacity.

Vector control without feedback

The vector calculation is done every millisecond using the measured instantaneous values. These values are given to the motor model that calculates the torque and the flux. The calculation does not include integrators that could cause problems due to "drifting" due to inaccuracies in parameters and measurements or changes in component values. The size and direction of the motor voltage is derived from the ASIC, thus errors in measurements have no effect. The adaptive motor model includes, in addition to the motor, also the converter and the motor cable, which means that the status of the motor is always well known.

Exact control

The dynamic precision of closed loop motor control is achieved by sensorless flux vector control.

- the speed error in static situations is less than 0,5%
- the torque rise time is less than10 ms
- no ripple in the torque
- not sensitive to resonance vibrations
- high starting torque: 200%
- high starting current: 2.5 x I_{CT}
- suitable for multimotor drive systems
- high speed applications, max output frequency 7200 Hz

The torque does not have any ripple, which is important in drive systems including gears. The stress of gears and couplings due to too fast dynamic response can be avoided by setting the torque response time correctly with a parameter when the torque control application is used.

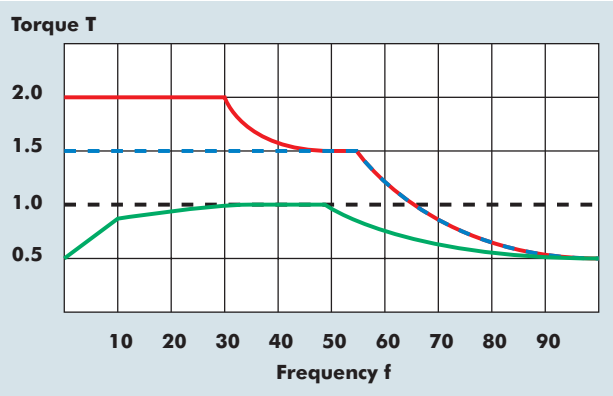

Example of the loadability of a standard motor supplied by a frequency converter.

- Starting torque
- Overloadability
- Nominal torque of the motor
- Continuous loadability of the motor when supplied by a frequency converter

Vector Control with Feedback

Full control of torque at zero speed is not possible without feedback. If a speed error of smaller than 0,5% is required in the application, motor control with feedback from an encoder is necessary. Feedback, or closed loop control is easy with Vacon frequency converters.

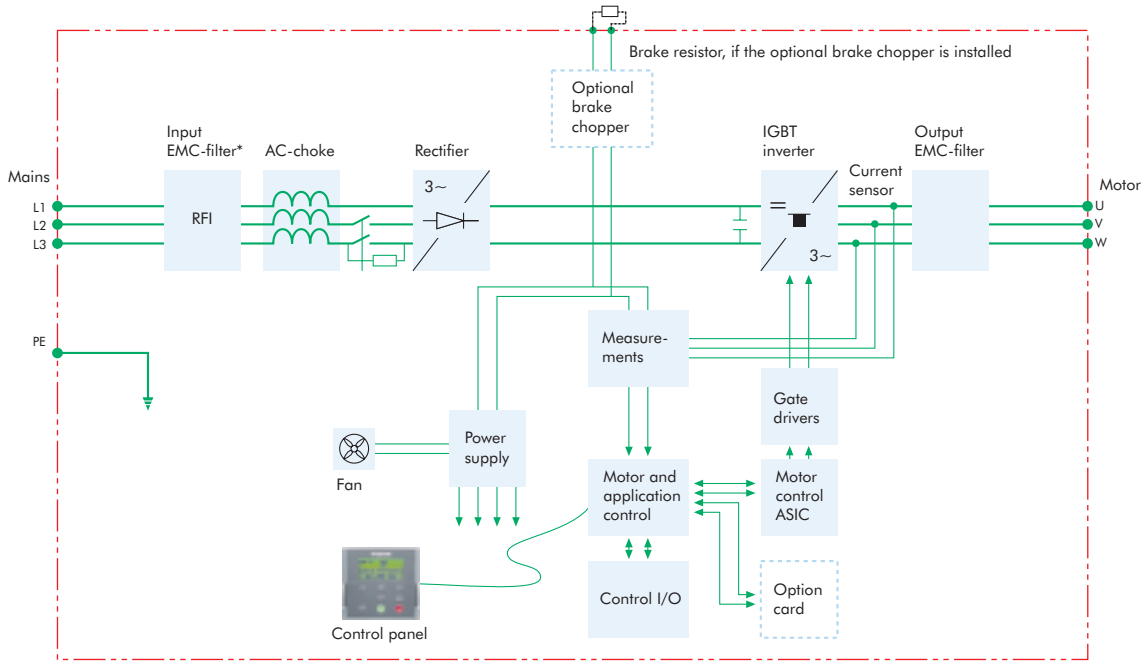

* external in CX range, integrated in CXS and CXL ranges

Applications

Vacon frequency converters can readily be adapted to your needs with one of the "Five in One+" –precision applications in each drive. Examples of typical uses are: pumps and fans, compressors, conveyors, winders, mixers, cranes and hoists, elevators, crushers etc.

Choose the one of the following applications that best suits your needs and I/O requirements:

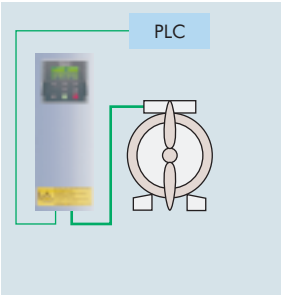

The basic application is the factory default setting. The I/O signals are fixed (not programmable). Only the basic parameter group 1 with only 18 parameters is available in the application. The frequency reference can be given as a current or a voltage signal, with a potentiometer or directly from the control panel. The application is very versatile.

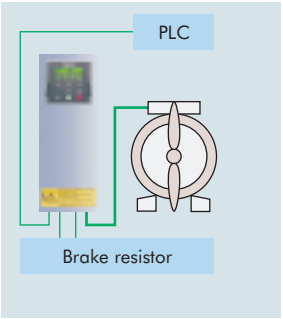

The standard application has the same control signal logic as the basic application but all digital inputs and all outputs are freely programmable. All 8 parameter groups are at your disposal: Basic parameters, input signal parameters, output and supervision parameters, drive control parameters, frequency parameters, motor control parameters, protections and autorestart parameters.

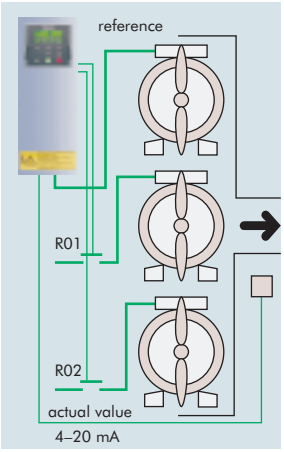

The pump and fan control application can be used to control one variable speed drive and up to four auxiliary drives. The PI-controller of the application controls the speed of the variable speed drive and gives start and stop signals to the auxiliary drives. All outputs are freely programmable. Besides the 8 parameter groups, you have a ninth group where the functions of the multiple pump and fan control are defined.
The Autochange function uses external contactors to switch between the motors connected to the frequency converter or to change the start order of the auxiliary drives. The Autochange application must separately be loaded into the frequency converter.
In booster stations a decrease of delivery pressure may be necessary if the input pressure decreases below a certain limit. This requires input pressure measurement. The Vacon pump and fan control application provides this.

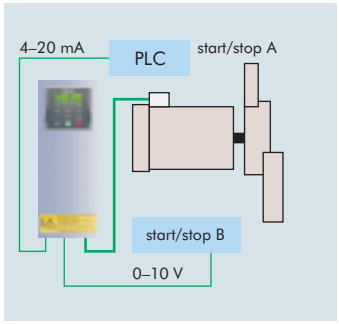

If two active control sources (A/B) are needed, the application for you is the **Local / Remote control application**. The sources of the frequency reference are programmable. The active control source is selected with a digital input. All outputs are freely programmable. All 8 parameter groups are at your disposal.

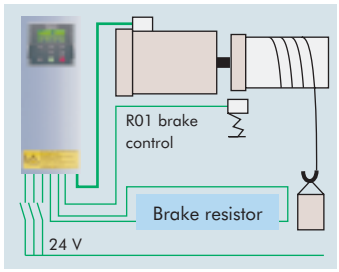

The multi-step speed control application is useful when you need to switch between fixed speeds. Nine programmable speeds can be used: basic speed, seven multi-step speeds and jogging speed. The speeds are selected with digital input signals. The basic speed reference can be either a voltage or a current signal. All outputs and inputs are freely programmable. All 8 parameter groups can be used.

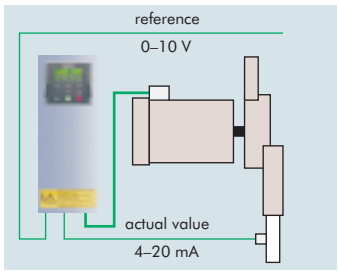

The PI-control application features two I/O terminal control sources. Source A is the PI-controller and source B is a direct frequency reference. The PI controller reference can be selected from the analogue inputs, the potentiometer and the panel reference. The actual value can be selected from the analogue inputs or from mathematical functions of the analogue inputs. The PI-control application is often used in pressure control applications where it is necessary to keep the pressure constant. All outputs are freely programmable and all 8 parameter groups can be utilized.

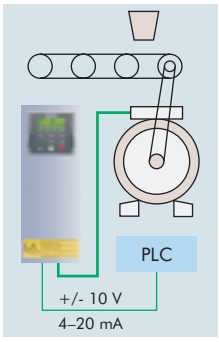

In the **Multi-purpose control application** the frequency reference can be selected from the analogue inputs, joystick control, potentiometer or a mathematical function of the analogue inputs. It is also possible to program different multi-step speeds and a jogging speed. All outputs are freely programmable. You have all 8 parameter groups at your disposal. Of all applications, the Multi-purpose application is the most versatile. Due to its special parameters, it allows a highly specified programming of your frequency converter.

We also offer customized special applications intended for general use: **Lift application, Winder application, High-speed application, Multi- purpose II control application, Torque control application, Torque control application for closed loop** etc. You can also edit the applications to better meet your requirements with the Vacon FC1131-3 Engineering Program.

Technical specifications

Choice of frequency converter

All frequency converters are sized according to the same principle, the required output current. Vacon converters have two different current ratings, I_{CT} and I_{VT}. I_{CT} is used for applications requiring high dynamics (load changes and fast ramp times), the sizing allows for a 50% overload for 1 minute every 10 minutes as well as a starting current of 250% of drive rated current. The I_{VT} rating is used for drives that do not require overload, usually centrifugal pumps and and fans.

As the torque is proportional to the current, bear in mind that constant torque drives require the same output current regardless of output frequency. The converters can also be used for multi-motor applications. In that case, the sum of the motor rated currents must be smaller than the converter rated current. We recommend the use of the I_{CT} rating for multi-motor applications.

Power range	
Vacon CX Vacon CXL Vacon CXS	1,5–1500 kW 0,75–500 kW 0,55–30 kW

Mains Input Connection	
voltage U_{in}	208–230V, -15% +- 10% 380–440V 460–500V 525–690V
Input frequency	45–66 Hz
Connection to the mains	once per minute or less (normally)

Motor Output Connection	
voltage	0–U_{in}
continuous output	I_{CT}: ambient max +50°C, current overload 1.5 x I_{CT} (1min/10 min) I_{VT}: ambient max +40°C, no overloading
starting torque	200%
starting current	2,5 x I_{CT}: 2 s. every 20 s. if output frequency <30 Hz and if the heatsink temp. <+60°C (up to M10, larger sizes case by case)
output frequency	0–500 Hz
frequency resolution	0.01 Hz

Control characteristics	
Control method	Frequency Control (U/f) Open Loop Sensorless Vector Control Closed Loop Vector Control
Switching frequency	1–16 kHz (up to 90 kW, 400/500 V series) 1–6 kHz (110–1500 kW and 600 V series)
Frequency reference	Analog I/P resolution 12 bit, accuracy ±1% Panel refer. resolution 0.01 Hz
Field weakening point	30–500 Hz
Acceleration time	0,1–3000 s
Deceleration time	0,1–3000 s
Braking torque	DC brake: 30%*T_N (without brake option)

Protective functions		
Overcurrent protection	Trip limit 4*I_{CT} (up to M10; in larger sizes case by case)	
Overvoltage protection	Mains voltage: 220 V 230 V 240 V 380 V 400 V 415 V 440 V 460 V 480 V 500 V 525 V 575 V 600 V 660 V 690 V	Trip limit: 1.47*U_n 1.41*U_n 1.35*U_n 1.47*U_n 1.40*U_n 1.35*U_n 1.27*U_n 1.47*U_n 1.41*U_n 1.35*U_n 1.77*U_n 1.62*U_n 1.55*U_n 1.41*U_n 1.35*U_n
Undervoltage protection	Trip limit 0.65 x U_n	
Earth-fault protection	Protects the inverter from an earth-fault in the output (motor or motor cable)	
Mains supervision	Trips if any of the input phases is missing	
Motor phase supervision	Trips if any of the output phases is missing	
Other	Unit over temperature protection, motor overload protection, stall protection, motor underload protection, short-circuit protection of +24V and +10V reference voltages	

Control connections	
Analogue voltage	0 – +10 V, R_i = 200 kΩ, single ended (-10 – +10V , joystick control), resolution12 bit, accur. ±1%
Analogue current	0 (4) – 20 mA, R_i = 250 Ω, differential
Digital inputs (6)	Positive or negative logic
Aux. voltage	+24V ±20%, max 100 mA
Pot. meter ref.	+10V -0%–+3%, max 10 mA
Analogue output	0 (4)–20 mA, R_L <500 Ω, resolution 10 bit, accur. ±3%
Digital output	Open collector output, 50 mA/48V
Relay outputs	Max switching voltage: 300 V DC, 250 V AC Max switching load: 8 A/24 V 0.4 A/250 V DC, 2 kVA/250 V AC Max continuous load: 2 A rms

Environmental limits

Ambient operating temperature	-10 (no frost) – +50°C at I_{CT} -10 (no frost) – +40°C at I_{VT}
Storage	-40°C – +60°C
Relative humidity	<95%, no condensation allowed
Air quality	chemical vapours IEC 721–3–3 unit in operation, class 3C2 mechanical particles IEC 721–3–3 unit in operation, class 3S2
Altitude	max 1000 m at continuous I_{CT}. Over 1000 m reduce I_{CT} by 1% per each 100 m, for altitudes >3000 m contact factory
Vibration (IEC 721–3–3)	Operation: max displacement amplitude 3 mm at 2 – 9 Hz, max acceleration amplitude 0,5 G at 9 – 200 Hz
Shock (IEC 68–2–27)	Operation: max 8 G, 11 ms Storage and shipping: max 15 G, 11 ms (in the package)

EMC

Noise immunity	Fulfils EN50082 – 1, – 2 , EN61800 – 3
Emissions	– xxCXxxxNx -series, equipped with external RFI-Filter (xRFIxxx), complies with EN50081 – 2 , EN61800 – 3 – xxCXLxxxIx -series, complies with EN50081 – 2 , EN61800 – 3 – xxCXLxxxCx -series, complies with EN50081 – 1, – 2 , EN61800 – 3 – xxCXSxxxIx -series, complies with EN50081 – 2 , EN61800 – 3 – xxCXSxxxCx -series, complies with EN50081 – 1, – 2 , EN61800 – 3
Safety	Fulfils EN50178, EN60204 -1,CE, UL, C-UL, FI, GOST R (check the ratingplate for specified approvals for each unit)
CE-mark	yes

Type designation code

VACON ❶	CA ❷	2,2 ❸	CX ❹	4 ❺	B ❻	2 ❼	N ❽	1 ❾	AA ❿

❶	VACON Vaasa Control
❷	Software version
❸	Nominal power of the unit (constant torque)
❹	Product range CX, CXL, CXS
❺	Nominal mains voltage: 2 = 230V, 4 = 400V, 5 = 500V, 6 = 690V (3-phase)
❻	Control panel option: A = 7-segment LED display B = graphic (LCD) display C = without local control panel D = special switches, potentiometer, etc. G = alphanumerical (LCD) display
❼	Enclosure classification: 0 = IP00 2 = IP20 5 = IP54 (NEMA 12/12K) 7 = IP21 (NEMA1) 9 = special (IP54 and IP21 only in CXL-serie)
❽	Emission level (complies with): N = (N = no filtering) complies with the standards EN50082-1,-2, EN61800-3 I = (I = industrial level) complies with the standards EN50081-2, EN50082-1,-2, EN61800-3 C = (C = commercial level) complies with the standards EN50081-1,-2, EN50082-1,-2, EN61800-3
❾	Internal brake chopper option: 0 = no brake chopper 1 = built-in brake chopper
❿	Special hardware version (if needed)

Typespecific data

Vacon product family - table for comparison

	VACON CX	VACON CXL	VACON CXS
Power range [kW]	1.5 - 1500	0.75 - 500	0.55 - 30
Supply and motor voltage 3 ~ [V]	230 - 690	230 - 500	230 - 500
Enclosure class IP	IP00, IP20	IP21, IP54	IP20
EMC classes (integrated)	N *	N, I, C **	N, I, C
AC choke (integrated)	Whole range	Whole range	4CXS - 22CXS
Motor control	Sensorless Vector Control		
Space for expander boards	1	1	***

* I-level equipped with external RFI-filter
** Integrated 0,75CXL - 90CXL
*** see Options
see also previous page, "Choice of frequency converter"

Vacon CX
Mains voltage 208 - 230 V, 50/60 Hz, 3~

Vacon Frequency converter type	Motor shaft power and current					Mech. size/ enclosure	Wt. (kg)
	Constant torque			Variable torque			
	P(kW)	I_{CT}	I_{CTmax}	P(kW)	I_{VT}		
1.5CX2	1.5	7	11	2.2	10	M4/IP20	7
2.2CX2	2.2	10	15	3	13	M4/IP20	7
3CX2	3	13	20	4	16	M4/IP20	7
4CX2	4	16	24	5.5	22	M5/IP20	15
5.5CX2	5.5	22	33	7.5	30	M5/IP20	15
7.5CX2	7.5	30	45	11	43	M5/IP20	15
11CX2	11	43	64	15	57	M6/IP20	35
15CX2	15	57	85	18.5	70	M6/IP20	35
18.5CX2	18.5	70	105	22	83	M6/IP20	35
22CX2	22	83	124	30	113	M6/IP20	35
30CX2	30	113	169	37	139	M7/IP00*	61
37CX2	37	139	208	45	165	M7/IP00*	61
45CX2	45	165	247	55	200	M7/IP00*	61
55CX2	55	200	300	75	264	M8/IP00*	136
75CX2	75	264	396	90	330	M8/IP00*	136
90CX2	90	330	495	110	415	M8/IP00*	136

Vacon CX
Mains voltage 380 – 440 V, 50/60 Hz, 3~

2.2CX4	2.2	6.5	10	3	8	M4/IP20	7
3CX4	3	8	12	4	10	M4/IP20	7
4CX4	4	10	15	5.5	13	M4/IP20	7
5.5CX4	5.5	13	20	7.5	18	M4/IP20	7
7.5CX4	7.5	18	27	11	24	M5/IP20	14.5
11CX4	11	24	36	15	32	M5/IP20	14.5
15CX4	15	32	48	18.5	42	M5/IP20	14.5
18.5CX4	18.5	42	63	22	48	M6/IP20	27
22CX4	22	48	72	30	60	M6/IP20	27
30CX4	30	60	90	37	75	M6/IP20	35
37CX4	37	75	113	45	90	M6/IP20	35
45CX4	45	90	135	55	110	M6/IP20	35
55CX4	55	110	165	75	150	M7/IP00*	61
75CX4	75	150	225	90	180	M7/IP00*	61
90CX4	90	180	250	110	210	M7/IP00*	61
110CX4	110	210	315	132	270	M8/IP00*	136
132CX4	132	270	405	160	325	M8/IP00*	136
160CX4	160	325	472	200	410	M8/IP00*	136
200CX4	200	410	615	250	510	M9/IP00*	211
250CX4	250	510	715	315	580	M9/IP00*	211
315CX4	315	600	900	400	750	M10/IP00*	273
400CX4	400	750	1000	500	840	M10/IP00*	273

Vacon CX
Mains voltage 440 – 500 V, 50/60 Hz, 3~

Vacon frequency converter type	Motor shaft power and current					Mech. size/ enclosure	Wt. (kg)
	Constant torque			Variable torque			
	P(kW)	I_{CT}	I_{CTmax}	P(kW)	I_{VT}		
2.2CX5	2.2	5	8	3	6	M4/IP20	7
3CX5	3	6	9	4	8	M4/IP20	7
4CX5	4	8	12	5.5	11	M4/IP20	7
5.5CX5	5.5	11	17	7.5	15	M4/IP20	7
7.5CX5	7.5	15	23	11	21	M5/IP20	14.5
11CX5	11	21	32	15	27	M5/IP20	14.5
15CX5	15	27	41	18.5	34	M5/IP20	14.5
18.5CX5	18.5	34	51	22	40	M6/IP20	27
22CX5	22	40	60	30	52	M6/IP20	27
30CX5	30	52	78	37	65	M6/IP20	35
37CX5	37	65	98	45	77	M6/IP20	35
45CX5	45	77	116	55	96	M6/IP20	35
55CX5	55	96	144	75	125	M7/IP00*	61
75CX5	75	125	188	90	160	M7/IP00*	61
90CX5	90	160	210	110	180	M7/IP00*	61
110CX5	110	180	270	132	220	M8/IP00*	136
132CX5	132	220	330	160	260	M8/IP00*	136
160CX5	160	260	390	200	320	M8/IP00*	136
200CX5	200	320	480	250	400	M9/IP00*	211
250CX5	250	400	571	315	460	M9/IP00*	211
315CX5	315	480	720	400	600	M10/IP00*	273
400CX5	400	600	900	500	672	M10/IP00*	273

Vacon CX
Mains voltage 525 – 690 V, 50/60 Hz, 3~

2.2CX6	2.2	3.5	5.5	3	4.5	M5/IP20	16
3CX6	3	4.5	7	4	5.5	M5/IP20	16
4CX6	4	5.5	8.5	5.5	7.5	M5/IP20	16
5.5CX6	5.5	7.5	11	7.5	10	M5/IP20	16
7.5CX6	7.5	10	15	11	14	M5/IP20	16
11CX6	11	14	21	15	19	M5/IP20	16
15CX6	15	19	29	18.5	23	M5/IP20	16
18.5CX6	18.5	23	34	22	26	M5/IP20	16
22CX6	22	26	40	30	35	M5/IP20	16
30CX6	30	35	53	37	42	M6/IP20	38
37CX6	37	42	63	45	52	M6/IP20	38
45CX6	45	52	78	55	62	M6/IP20	38
55CX6	55	62	93	75	85	M6/IP20	38
75CX6	75	85	127	90	100	M6/IP20	38
90CX6	90	100	150	110	122	M8/IP00*	136
110CX6	110	122	183	132	145	M8/IP00*	136
132CX6	132	145	218	160	185	M8/IP00*	136
160CX6	160	185	277	200	222	M9/IP00*	211
200CX6	200	222	333	250	287	M9/IP00*	211
250CX6	250	287	430	315	325	M10/IP00	273
315CX6	315	325	487	400	390	M10/IP00	273

I_{CT} = rated input and output current (constant torque load, max 50°C ambient)

I_{CTmax} = short term overload current 1min/10min (constant torque load, max 50°C ambient)

I_{VT} = rated input and output current (variable torque load, max 40°C ambient)

* = IP20 with option

** = also IP54

Vacon CXL Mains voltage 208 – 230 V, 50/60 Hz, 3~							
Vacon frequency converter type	Motor shaft power and current					Mech. size/ enclosure	Wt. (kg)
	Constant torque			Variable torque			
	P(kW)	I_{CT}	I_{CTmax}	P(kW)	I_{VT}		
1.5CXL2	1.5	7	11	2.2	10	M4/IP21**	7
2.2CXL2	2.2	10	15	3	13	M4/IP21**	7
3CXL2	3	13	20	4	16	M4/IP21**	7
4CXL2	4	16	24	5.5	22	M5/IP21**	15
5.5CXL2	5.5	22	33	7.5	30	M5/IP21**	15
7.5CXL2	7.5	30	45	11	43	M5/IP21**	15
11CXL2	11	43	64	15	57	M6/IP21**	35
15CXL2	15	57	85	18.5	70	M6/IP21**	35
18.5CXL2	18.5	70	105	22	83	M6/IP21**	35
22CXL2	22	83	124	30	113	M6/IP21**	35
30CXL2	30	113	169	37	139	M7/IP21**	82
37CXL2	37	139	208	45	165	M7/IP21**	82
45CXL2	45	165	247	55	200	M7/IP21**	82
55CXL2	55	200	300	75	264	M8/IP21**	153
75CXL2	75	264	396	90	330	M8/IP21**	153
90CXL2	90	330	495	110	415	M8/IP21**	153

Vacon CXL Mains voltage 380 – 440 V, 50/60 Hz, 3~							
0.75CXL4	0.75	2.5	3.8	1.1	3.5	M4/IP21**	6
1.1CXL4	1.1	3.5	5.3	1.5	4.5	M4/IP21**	6
1.5CXL4	1.5	4.5	6.8	2.2	6.5	M4/IP21**	6
2.2CXL4	2.2	6.5	10	3	8	M4/IP21**	8
3CXL4	3	8	12	4	10	M4/IP21**	8
4CXL4	4	10	15	5.5	13	M4/IP21**	8
5.5CXL4	5.5	13	20	7.5	18	M4/IP21**	8
7.5CXL4	7.5	18	27	11	24	M5/IP21**	16
11CXL4	11	24	36	15	32	M5/IP21**	16
15CXL4	15	32	48	18.5	42	M5/IP21**	16
18.5CXL4	18.5	42	63	22	48	M6/IP21**	32
22CXL4	22	48	72	30	60	M6/IP21**	32
30CXL4	30	60	90	37	75	M6/IP21**	38
37CXL4	37	75	113	45	90	M6/IP21**	38
45CXL4	45	90	135	55	110	M6/IP21**	38
55CXL4	55	110	165	75	150	M7/IP21**	82
75CXL4	75	150	225	90	180	M7/IP21**	82
90CXL4	90	180	250	110	210	M7/IP21**	82
110CXL4	110	210	315	132	270	M8/IP21**	153
132CXL4	132	270	405	160	325	M8/IP21**	153
160CXL4	160	325	472	200	410	M8/IP21**	153
200CXL4	200	410	615	250	510	M9/IP21**	230
250CXL4	250	510	715	315	580	M9/IP21**	230
315CXL4	315	600	900	400	750	M10/IP20	305
400CXL4	400	750	1000	500	840	M10/IP20	305

Vacon CXS Mains voltage208 – 230 V, 50/60 Hz, 3~							
0.55CXS2	0.55	3.6	5.4	0.75	4.7	M3/IP20	4.5
0.75CXS2	0.75	4.7	7.1	1.1	5.6	M3/IP20	4.5
1.1CXS2	1.1	5.6	8.4	1.5	7	M3/IP20	4.5
1.5CXS2	1.5	7	11	2.2	10	M3/IP20	4.5
2.2CXS2	2.2	10	15	3	13	M4B/IP20	7
3CXS2	3	13	20	4	16	M4B/IP20	7
4CXS2	4	16	24	5.5	22	M4B/IP20	7
5.5CXS2	5.5	22	33	7.5	30	M4B/IP20	7
7.5CXS2	7.5	30	45	11	43	M5B/IP20	21
11CXS2	11	43	64	15	57	M5B/IP20	21
15CXS2	15	57	85	18.5	70	M5B/IP20	21

Vacon CXL Mains voltage 440 – 500 V, 50/60 Hz, 3~							
Vacon Frequency converter type	Motor shaft power and current					Mech. size/ enclosure	Wt. (kg)
	Constant torque			Variable torque			
	P(kW)	I_{CT}	I_{CTmax}	P(kW)	I_{VT}		
0.75CXL5	0.75	2.5	3.8	1.1	3	M4/IP21**	6
1.1CXL5	1.1	3	4.5	1.5	3.5	M4/IP21**	6
1.5CXL5	1.5	3.5	5.3	2.2	5	M4/IP21**	6
2.2CXL5	2.2	5	8	3	6	M4/IP21**	8
3CXL5	3	6	9	4	8	M4/IP21**	8
4CXL5	4	8	12	5.5	11	M4/IP21**	8
5.5CXL5	5.5	11	17	7.5	15	M4/IP21**	8
7.5CXL5	7.5	15	23	11	21	M5/IP21**	16
11CXL5	11	21	32	15	27	M5/IP21**	16
15CXL5	15	27	41	18.5	34	M5/IP21**	16
18.5CXL5	18.5	34	51	22	40	M6/IP21**	32
22CXL5	22	40	60	30	52	M6/IP21**	32
30CXL5	30	52	78	37	65	M6/IP21**	38
37CXL5	37	65	98	45	77	M6/IP21**	38
45CXL5	45	77	116	55	96	M6/IP21**	38
55CXL5	55	96	144	75	125	M7/IP21**	82
75CXL5	75	125	188	90	160	M7/IP21**	82
90CXL5	90	160	210	110	180	M7/IP21**	82
110CXL5	110	180	270	132	220	M8/IP21**	153
132CXL5	132	220	330	160	260	M8/IP21**	153
160CXL5	160	260	390	200	320	M8/IP21**	153
200CXL5	200	320	480	250	400	M9/IP21**	230
250CXL5	250	400	571	315	460	M9/IP21**	230
315CXL5	315	480	720	400	600	M10/IP20	305
400CXL5	400	600	900	500	672	M10/IP20	305

Vacon CXS Mains voltage 380 – 440 V, 50/60 Hz, 3~							
0.75CXS4	0.75	2.5	3.8	1.1	3.5	M3/IP20	4.5
1.1CXS4	1.1	3.5	5.3	1.5	4.5	M3/IP20	4.5
1.5CXS4	1.5	4.5	6.8	2.2	6.5	M3/IP20	4.5
2.2CXS4	2.2	6.5	10	3	8	M3/IP20	4.5
3CXS4	3	8	12	4	10	M3/IP20	4.5
4CXS4	4	10	15	5.5	13	M4B/IP20	7
5.5CXS4	5.5	13	20	7.5	18	M4B/IP20	7
7.5CXS4	7.5	18	27	11	24	M4B/IP20	7
11CXS4	11	24	36	15	32	M4B/IP20	7
15CXS4	15	32	48	18.5	42	M5B/IP20	21
18.5CXS4	18.5	42	63	22	48	M5B/IP20	21
22CXS4	22	48	72	30	60	M5B/IP20	21

Vacon CXS Mains voltage 440 – 500 V, 50/60 Hz, 3~							
0.75CXS5	0.75	2.5	3.8	1.1	3	M3/IP20	4.5
1.1CXS5	1.1	3	4.5	1.5	3.5	M3/IP20	4.5
1.5CXS5	1.5	3.5	5.3	2.2	5	M3/IP20	4.5
2.2CXS5	2.2	5	8	3	6	M3/IP20	4.5
3CXS5	3	6	9	4	8	M3/IP20	4.5
4CXS5	4	8	12	5.5	11	M4B/IP20	7
5.5CXS5	5.5	11	17	7.5	15	M4B/IP20	7
7.5CXS5	7.5	15	23	11	21	M4B/IP20	7
11CXS5	11	21	32	15	27	M4B/IP20	7
15CXS5	15	27	41	18.5	34	M5B/IP20	21
18.5CXS5	18.5	34	51	22	40	M5B/IP20	21
22CXS5	22	40	60	30	52	M5B/IP20	21

Vacon CXC cabinet solution

Vacon CX frequency converters can easily be installed in a cabinet. Besides the standard cabinet, we also offer customized solutions. Using our Scope of Work form it is easy to define the kind of Vacon CXC cabinet version you need. Just fill in the desired configuration and options in the form.

Vacon CXC series covers the power range 55 kW – 1500 kW, at input voltages 400/500/690 V. Enclosure classes available are IP20, IP21, IP31 and IP54. The electrical properties, applications, I/O connections, motor control, use, dimensioning and options are those of the CX and CXL series.

Due to thoroughly tested design solutions, Vacon CXC frequency converters provide an excellent balance between



Vacon 400CXC467NO with main switch and by-pass circuit

Vacon CXC type designation code.

VACON	500	CXC	5	E	7	N	0	A	0	AA	2	N	2	BB
1	2	3	4	5	6	7	8	9	10	11	12	13	14	15

1	VACON Vaasa Control Oy
2	Nominal power of the unit
3	Product range CXC
4	Nominal mains voltage 4=400, 5=500, 6=690 V
5	Control panel option A=7-segment LED display, B=graphic LCD display, C=without control panel, D=special, switches, pot., etc., E=7-segment panel installed on the door, F=graphical panel installed on the door, G=alphanumeric, H=alphanumeric installed on the door
6	Enclosure classification 2=IP20, 7=IP21, 3=IP31, 5=IP54, 9=special
7	Emission level N = complies with the standards EN50082-1, -2, EN61800-3 I = complies with the standards EN50082-1, -2, EN50081-2,EN61800-3
8	Internal brake chopper option 0=no brake chopper, 1=built-in brake chopper
9	Option board A=none, B=Vacon CX100OPT, C=Vacon CX101OPT, D=Vacon CX102OPT, E=Vacon CX103OPT, F=Vacon CX200OPT, G=Vacon CX201OPT, H=Vacon CX202OPT, I=Vacon CX203OPT, K=other
10	Galvanic isolation for analog inputs/outputs 0=none, 1=analog input, 2=analog output, 3=both, 4=all (if Vacon equipped with option board)
11	Cabling for mains and motor connection Mains: A=bottom, B=top, C=other Motor: A=bottom, B=top, C=other
12	Mains device 0=none, 1=load switch, 2=switch fuse, 3=MCCB, 4=ACB, 5=other
13	Mains contactor N=none, C=mains contactor E=mains contactor with emergency stop
14	Motor protection filter 0=none, 1=dU/dt filter, 2=sinus filter, 3=other
15	Special hardware version (if needed) AA=none, AB=Vacon standard by-pass circuit, BA=other, BB=regenerative solution (CXR)

CT=Constant torque, VT=Variable torque, I_{ct}=rated input and output current (max. 50°C),
$I_{ct\ max}$=short term overload current (max. 50°C), I_{vt}=rated input and output current (max. 40°C).

	Input/motor voltage Un [V] 380 - 440 (3~)				Input/motor voltage Un [V] 440 - 500 (3~)					Input/motor voltage Un [V] 525 - 690 (3~)							
Pn [kW]	Frequency converter type	Output current [A]			Frequency converter type	Output current [A]			Pn [kW]	Frequency converter type	Output current [A]			Dimensions IP00 [mm]			Wt. [kg]
		I_{CT}	I_{CTmax}	I_{VT}		I_{CT}	I_{CTmax}	I_{VT}			I_{CT}	I_{CTmax}	I_{VT}	W	H	D	
500	500CX4	840	1200	1050	500CX5	675	880	880	400	400CX6	400	560	490	2x700	1000	390	430
630	630CX4	1050	1400	1160	630CX5	880	1120	1020	500	500CX6	490	680	620	2x989	1000	390	430
710	710CX4	1270	1500	1330	710CX5	1020	1200	1070	630	630CX6	620	780	700	2x989	1000	390	430
800	800CX4	1330	1600	1480	800CX5	1070	1300	1200	710	710CX6	700	870	*	2x989	1000	390	550
900	900CX4	1480	1700	*	900CX5	1200	1400	*	800	800CX6	*	*	780	2x989	1000	390	550
1000	1000CX4	*	*	1600	1000CX5	*	*	1300	-	-	-	-	-	2x989	1000	390	550
1100	1100CX4	1600	2100	1900	1100CX5	1300	1700	1600	900	900CX6	780	1030	900	3x989	1000	390	820
1250	1250CX4	1800	2400	2100	1250CX5	1530	2000	1700	1000	1000CX6	880	1160	1000	3x989	1000	390	820
1500	1500CX4	*	*	2270	1500CX5	*	*	1950	1100	1100CX6	*	*	1100	3x989	1000	390	820
									1250	1250CX6	*	*	1300	3x989	1000	390	820

* contact the factory for details

the current and the temperature. The Vacon CX and CXC frequency converters can be connected to the supply voltage with either 6-, 12- or 18-pulse inputs. 12-pulse configuration is possible from 110 kW (400/500 V), at 690 V from 90 kW upwards.

18-pulse input can be utilized in frame M13 from 1100 kW upwards (400/500 V). At 690 V the 18-pulse input is available from 900 kW . If equipped with an RFI filter, Vacon CXC complies with the following EMC directives of the EU: EN50081-2, EN50082-1, -2 and EN61800-3 (industrial level).

The excellent cooling capacity of Vacon CXC series results from the Vacon air circulation control system. As a result, IP20 and IP31 solutions do not need a separate fan in the cubicle because the fans incorporated in the Vacon CX frequency converter structure IP00 are powerful enough to cool the cabinet.

The Vacon CXC cabinet version can be equipped with options to meet your requirements: EMC filter, dU/dt filter, sinusoidal filter, load switch, switch fuse, moulded-case circuit-breaker or air circuit-breaker, contactor and standard by-pass (see Type designation).The cabling can be either from the top or from the bottom of the enclosure.

Basic drawings without options and pictures with all options are available for all standard cabinets. The total width of the cabinet depends on the configuration, cabling and type and number of options. Input terminal height is 850 mm from the floor level. With options the height must be considered case by case.

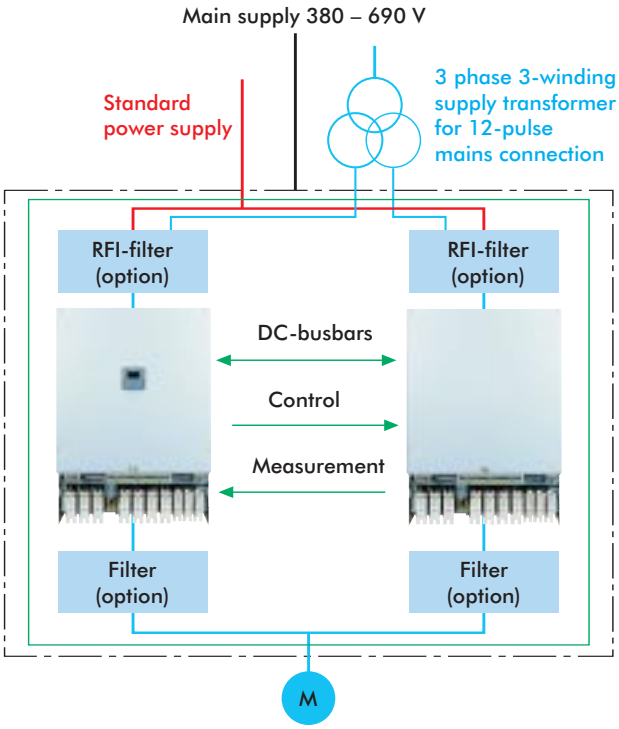

Vacon 500 - 1000CX4/5/6 frequency converters with 6- and 12-pulse mains connection.

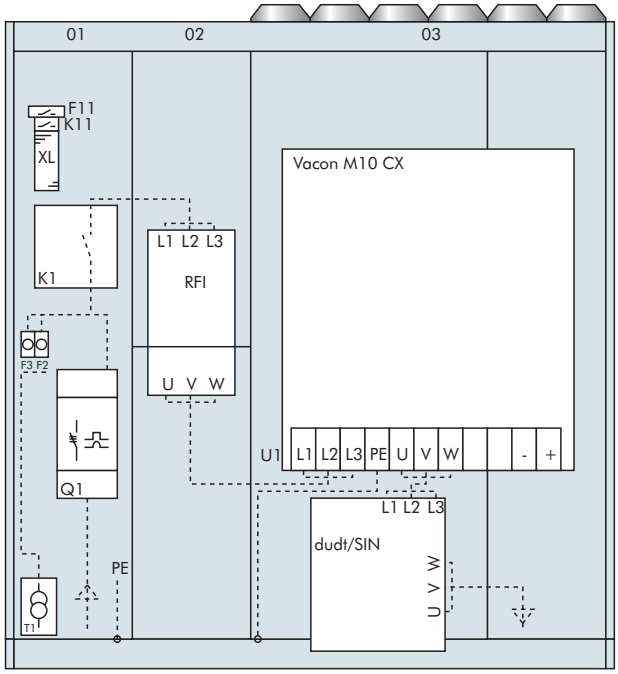

Standard diagram of Vacon CXC drive with maximum range of options.

Vacon CXC: standard IP21 switchgear dimensions.

Pn kW	Converter type	Dimensions [mm] W	H	D	Wt. [kg]	Size	Converter type	Dimensions [mm] W	H	D	Wt. [kg]	Size	Converter type	Dimensions [mm] W	H	D	Wt. [kg]	Size
55	Vacon 55CXC4						Vacon 55CXC5						-	-	-	-	-	-
75	Vacon 75CXC4	660	2265	640	212	M7	Vacon 75CXC5	660	2265	640	212	M7	-	-	-	-	-	-
90	Vacon 90CXC4						Vacon 90CXC5						Vacon 90CXC6					
110	Vacon 110CXC4						Vacon 110CXC5						Vacon 110CXC6	860	2265	640	308	M8
132	Vacon 132CXC4	860	2265	640	308	M8	Vacon 132CXC5	860	2265	640	308	M8	Vacon 132CXC6					
160	Vacon 160CXC4						Vacon 160CXC5						Vacon 160CXC6	1060	2265	640	420	M9
200	Vacon 200CXC4	1060	2265	640	420	M9	Vacon 200CXC5	1060	2265	640	420	M9	Vacon 200CXC6					
250	Vacon 250CXC4						Vacon 250CXC5						Vacon 250CXC6	1260	2265	640	485	M10
315	Vacon 315CXC4	1260	2265	640	485	M10	Vacon 315CXC5	1260	2265	640	485	M10	Vacon 315CXC6					
400	Vacon 400CXC4						Vacon 400CXC5						Vacon 400CXC6	2060	2265	640	843	M11
500	Vacon 500CXC4	2060	2265	640	843	M11	Vacon 500CXC5	2060	2265	640	485	M11	Vacon 500CXC6					
630	Vacon 630CXC4						Vacon 630CXC5						Vacon 630CXC6	2460	2265	640	975	M12
710	Vacon 710CXC4						Vacon 710CXC5						Vacon 710CXC6					
800	Vacon 800CXC4	2460	2265	640	975	M12	Vacon 800CXC5	2460	2265	640	975	M12	Vacon 800CXC6					
900	Vacon 900CXC4						Vacon 900CXC5						Vacon 900CXC6					
1000	Vacon 1000CXC4						Vacon 1000CXC5						Vacon 1000CXC6					
1100	Vacon 1100CXC4						Vacon 1100CXC5						Vacon 1100CXC6	3660	2265	640	1480	M13
1250	Vacon 1250CXC4	3660	2265	640	1480	M13	Vacon 1250CXC5	3660	2265	640	1480	M13	Vacon 1250CXC6					
1500	Vacon 1500CXC4						Vacon 1500CXC5						Vacon 1500CXC6					

Additional cubicle width for options and special connections: 200, 300, 400 and 600 mm

Vacon CXI

VACON CXI is a DC fed frequency converter based on the tested Vacon CX range. It does not include a rectifier bridge. The energy the motor needs is fed as DC to the CXI and any braking energy is fed back into the DC supply. Typical applications include paper machines, printing presses, centrifuges, system drives etc. The CXI is usually connected either to an active front end or to a multipulse transformer/rectifier combination. This allows the system to be supplied either from the AC supply or to transfer energy in both directions, to and from the supply.

The power range is 2.2 – 1500 kW, at 400 and 500 V. The Vacon CXI is available in enclosure classes IP00 – IP20. Common DC-bus systems are designed by Vaasa Control on a case-by-case basis.



A Vacon CXI common DC-bus system for three extruders and winders provides savings of 25% in purchase costs for the machine manufacturer compared to the DC alternative, owing to the possibility to use standard AC motors. Controllability and printing result remain at the highest possible level.

Frequency converter type	Constant torque			Var. torque				
	Power [kW]	Current I_{CT} [A]	Current I_{CTmax} [A]	Power [kW]	Current I_{VT} [A]	M/IP	Dimensions (CXI) W x H x D [mm]	Wt. (CXI) [kg]
2,2CXI/R	2,2	6,5	10	3	8	M4/IP00	120x290x215	7
3CXI/R	3	8,0	12	4	10	M4/IP00	120x290x215	7
4CXI/R	4	10	15	5,5	13	M4/IP00	120x290x215	7
5,5CXI/R	5,5	13	20	7,5	18	M4/IP00	120x290x215	7
7,5CXI/R	7,5	18	27	11	24	M5/IP00	157x405x238	15
11CXI/R	11	24	36	15	32	M5/IP00	157x405x238	15
15CXI/R	15	32	48	18,5	42	M5/IP00	157x405x238	15
18,5CXI/R	18,5	42	63	22	48	M6/IP00	220x525x290	27
22CXI/R	22	48	72	30	60	M6/IP00	220x525x290	27
30CXI/R	30	60	90	37	75	M6/IP00	220x525x290	35
37CXI/R	37	75	113	45	90	M6/IP00	220x525x290	35
45CXI/R	45	90	135	55	110	M6/IP00	220x525x290	35
55CXI/R	55	110	165	75	150	M7/IP00	250x800x315	61
75CXI/R	75	150	225	90	180	M7/IP00	250x800x315	61
90CXI/R	90	180	250	110	210	M7/IP00	250x800x315	61
110CXI/R	110	210	315	132	270	M8/IP00	496x890x353	136
132CXI/R	132	270	405	160	325	M8/IP00	496x890x353	136
160CXI/R	160	325	472	200	410	M8/IP00	496x890x353	136
200CXI/R	200	410	615	250	510	M9/IP00	700x1000x390	211
250CXI/R	250	510	765	315	580	M9/IP00	700x1000x390	211
315CXI/R	315	600	900	400	750	M10/IP00	989x1000x390	273
400CXI/R	400	750	1000	500	840	M10/IP00	989x1000x390	273
500CXI/R	500	840	1200	630	1050	M10/IP00	2x(700)x1000x390	430
630CXI/R	630	1050	1400	710	1160	M10/IP00	2x(989)x1000x390	550
710CXI/R	710	1270	1500	800	1330	M10/IP00	2x(989)x1000x390	550
800CXI/R	800	1330	1600	900	1480	M10/IP00	2x(989)x1000x390	550
900CXI/R	900	1480	1700	*	*	M12/IP00	2x(989)x1000x390	500
1000CXI/R	1000	*	*	*	1600	M12/IP00	2x(989)x1000x390	500
1100CXI/R	1100	1600	2100	*	1900	M13/IP00	3x(989)x1000x390	780
1250CXI/R	1250	1800	2400	*	2100	M13/IP00	3x(989)x1000x390	780
1500CXI/R	1500	*	*	*	2270	M13/IP00	3x(989)x1000x390	780

** Contact the factory for details*

The dimensions of the Vacon CXR line filter are not included. The basic configuration of Vacon CXR comprises two CXI units and a line filter. Accordingly: dimensions of one CXR solution are 2 x CXI dimensions, plus weight and the dimensions of the line filter.

Vacon CXR – regenerative solution

VACON CXR has been developed especially for applications requiring continuous braking. The CXR produces practically harmonic-free energy that can be fed back into the supply. It is also possible to actively compensate the supply's power factor.

The Vacon CXR consists of two identical units, one of which is connected to the motor and the other through a filter to the supply. The filter is of the LCL-type. The DC-links of the units are connected. The unit controlling the motor is identical to a standard Vacon CX as regards its functions: same control panel, same I/O connections and same motor control. The power range is 2,2 – 1500 kW and the voltage range 400/500 V.

Vacon CXR is a complete set of hardware that is usually placed in a cabinet. Up to Vacon 90 CXR it may consist of three separate boxes, protected to IP20.

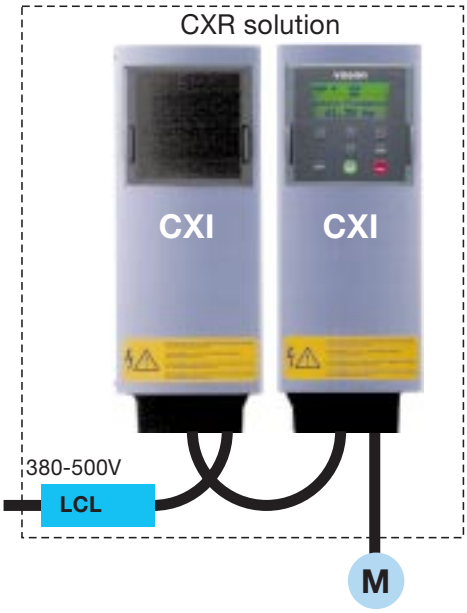

Vaasa Control Oy uses a 800 kW Vacon CXR for the normal daily routine testing of frequency converters.



Typical applications: centrifuges, decanters, cranes and heavy conveyors. The speed of wind generators and small turbines may also be optimised.

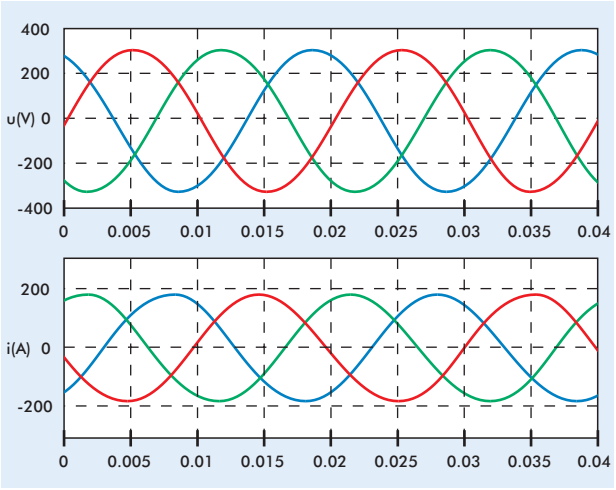

Typical input voltage and current curves of a CXR-drive. Note the fine sinusoidal undisturbed form. The THD value of the current is normally <4 %.

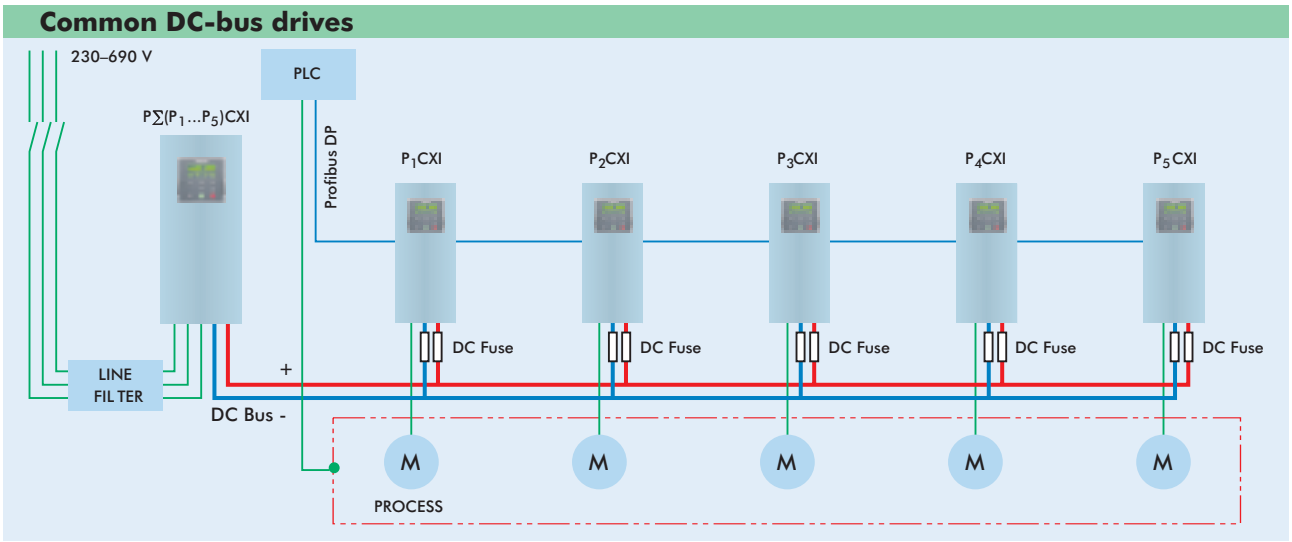

Dimensioning of Vacon CXI line units and CXI inverter units is done separately according to the motor and generator loads. The costs are optimized on both sides without danger of overdimensioning.

Vacon user interface – MMI

Vacon frequency converters feature a menu-structured alpha-numeric control panel as standard. The panel is detachable and it can be used with all Vacon CX, CXL and CXS frequency converters.

It is possible to connect an RS-232C serial cable to the frequency converter. The cable can be used to

- keep the control panel separated from the converter (e.g. for door installation)
- connect the frequency converter to a PC for the use of PC-tool programs

The maximum length of the cable is 10–15 m depending on ambient conditions.



Using the RS232C connection

Vacon alphanumeric panel

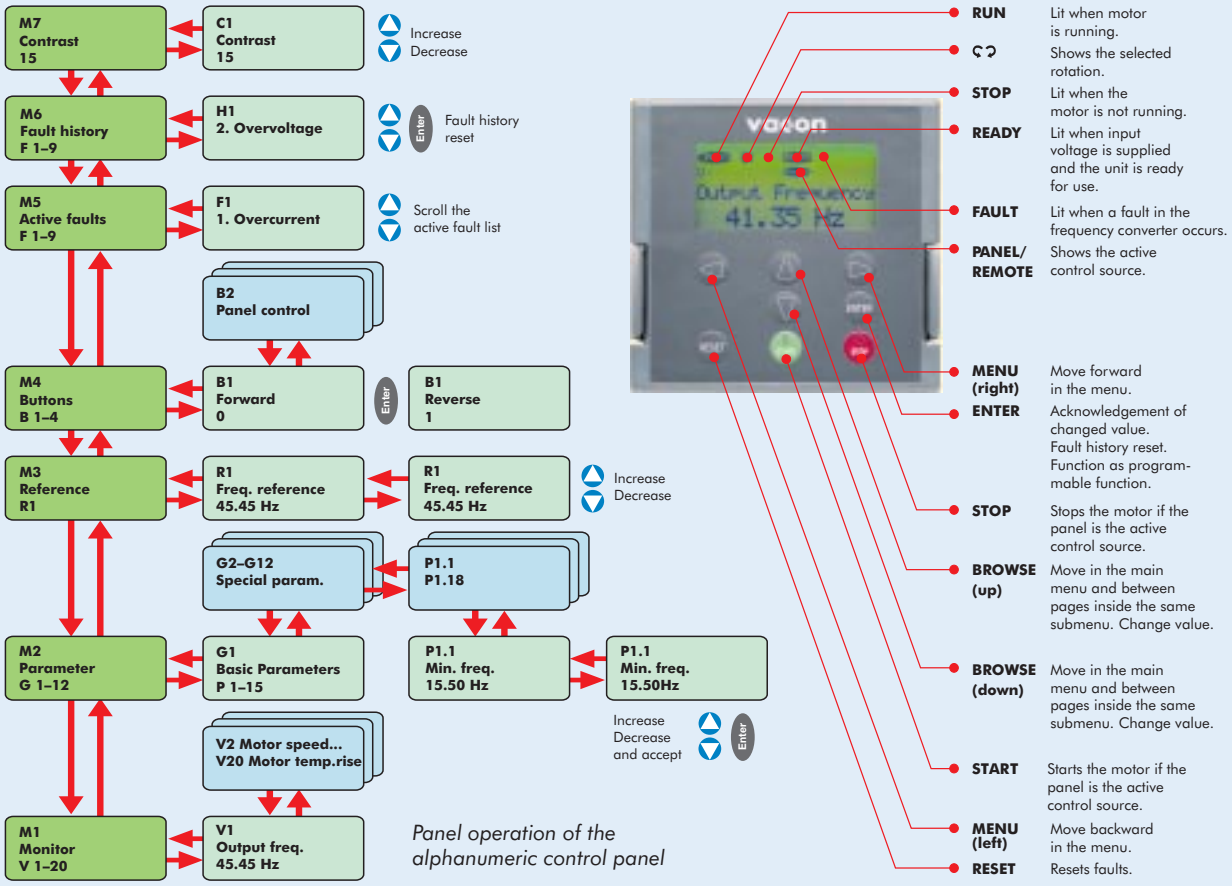

Panel operation of the alphanumeric control panel

Vacon graphical panel (optional)

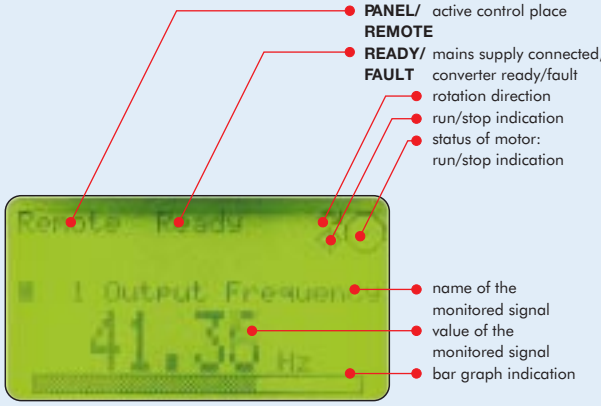



The graphical panel is an option to the alphanumeric panel. This panel can also be removed as well as used with all Vacon CX, CXL and CXS converters. With the graphical panel you can for instance copy parameter sets from one unit to the other, monitor measurements with trend curves, monitor three values at the same time and select function pages.

Options

Vacon CX10xOPT expander boards

Vacon I/O expander boards are used to increase the number of I/Os available. In Vacon CX and CXL models, the expander board can be installed inside the drive. In some cases a separate option board box is needed for the CXS model. The type code for the option board box is Vacon CXSOPTBxxx (xxx=number of option board).

	Digital inputs	Analogue inputs	Relay outputs	Analogue outputs	Thermistor inputs	Encoder connection	+24 VDC	+10 VDC
Vacon CX100OPT	5	2 [mA, V]	3	1 [mA]	1	●	●	●
Vacon CX101OPT	5	o	1	o	1	□	●	□
Vacon CX102OPT	5	2 [mA, V]	3	1 [V]	1	●	●	●
Vacon CX103OPT	5	□	3	1 [mA]	1	□	●	□
Vacon CX104OPT*	□	□	□	□	□	●	□	□
Vacon CX105OPT*	6 (120 VAC)	□	1 [mA]	□	□	□	□	□
Vacon CX106OPT	□	□	3	3**	1	□	□	□
Vacon CX107OPT*	□	1 [V]	□	□	□	●	□	□
Vacon CX108OPT*	□	□	1	1 [mA]	1	□	□	□

□ = no ● = yes * Can be installed inside the frequency converter in CXS models.
** Output in mA or V (selectable).

Vacon CX20xOPT fieldbus options

In serial data transmission the information transmitted is in digital form which makes the systems immunity to disturbances better. Very accurate references can also be given to the converter. The use of a fieldbus offers unlimited possibilities to handle the information from the frequency converter. Moreover, the control functions of the converter are multiplied because either a programmable logic controller or a computer system can be used as the bus host.

When connected to a fieldbus, the frequency converter can be controlled and monitored in many ways from the host system. Control commands can be given through the bus: start/stop, speed and direction. The frequency converter functions can also be monitored from the bus: e.g. drive temperature or motor current. Parameter setting and reading can also be done through the bus. If a fault trip has occurred in the frequency converter its cause can be read and reset from the host system.

Vaasa Control Ltd has developed option boards for Vacon frequency converters. The frequency converter can be connected to different fieldbus systems through these option boards. The option board is installed inside the Vacon frequency converter.

Vacon CX20xOPT bus system boards

Field protocol	Option board (CX and CXL series)	Option board (CXS series)
Interbus-S*	CX200OPT	CXSOPTB200
Modbus	CX201OPT	CX211OPT
Profibus DP	CX202OPT	CX210OPT
LonWorks*	CXSOPTB203	CXSOPTB203
C-bus*	CX204OPT	CXSOPTB204
Device NET	CX213OPT	CX212OPT

*Separate option board box is needed for the CXS series. LonWorks is always installed in a separate box.

Other options

Vacon RFI-, dU/dt and sinus filters

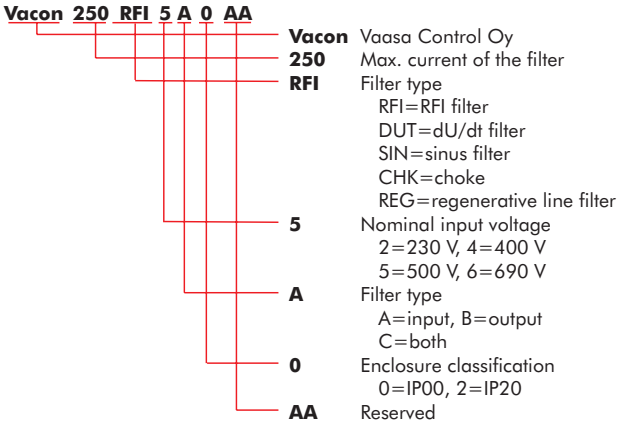

Floor installation options

- Vacon MOCXLMxFAO
- Mechanical sizes M8 - M12

Control panels

- Vacon CXPAN_A (7-segment)
- Vacon CXPAN_B (fully graphical)
- Vacon CXPAN_G (alpha-numeric, standard)

Other panel units

- Vacon CXPAN_0 (blank panel)
- Vacon CXPAN_1 (galvanic isolator panel)

Door installation series

- Vacon PDIS1 (IP20)
- Vacon PDIS2 (IP54, 7-segment)
- Vacon PDIS3 (IP54, fully graphical)
- Vacon PDIS4 (IP54, alphanumeric)

Brake resistors

- Vacon BRxx
- For dynamic braking

Through-panel mounting bracket

- Vacon MOCXxxTP
- For embedding installation of sizes M4-M7

Remote control units

- Vacon BOXxx
- Different variations

Varnished circuit boards

- Vacon SLBMx
- Special varnishing for demanding environments

Graphical tools

There are different PC Windows-based programs available to ease the use of Vacon frequency converters. These programs perform different tasks like commissioning, loading of different applications and block programming. The tools contain integrated help files making them easy to use. To use the programs successfully, you only need a PC and a RS232C serial cable, which is connected to the RS232C terminal beneath the control panel of the frequency converter.

FCDrive

FCDrive is an easy-to-use commissioning tool for Vacon frequency converters. With FCDrive, you can upload parameters from the frequency converter, change them, save them in a file or download back to the converter, print the parameters on paper or to a file, set references, start and stop the motor, monitor signals on a graphic display (trend page) and monitor the actual values. Minimum requirements for the use of FCDrive are a PC equipped with 486 processor, 4 MB free RAM, 4 MB free disk space and Windows 3.1x.

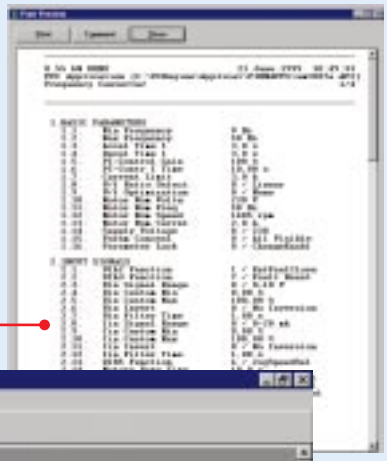

Parameter printout.

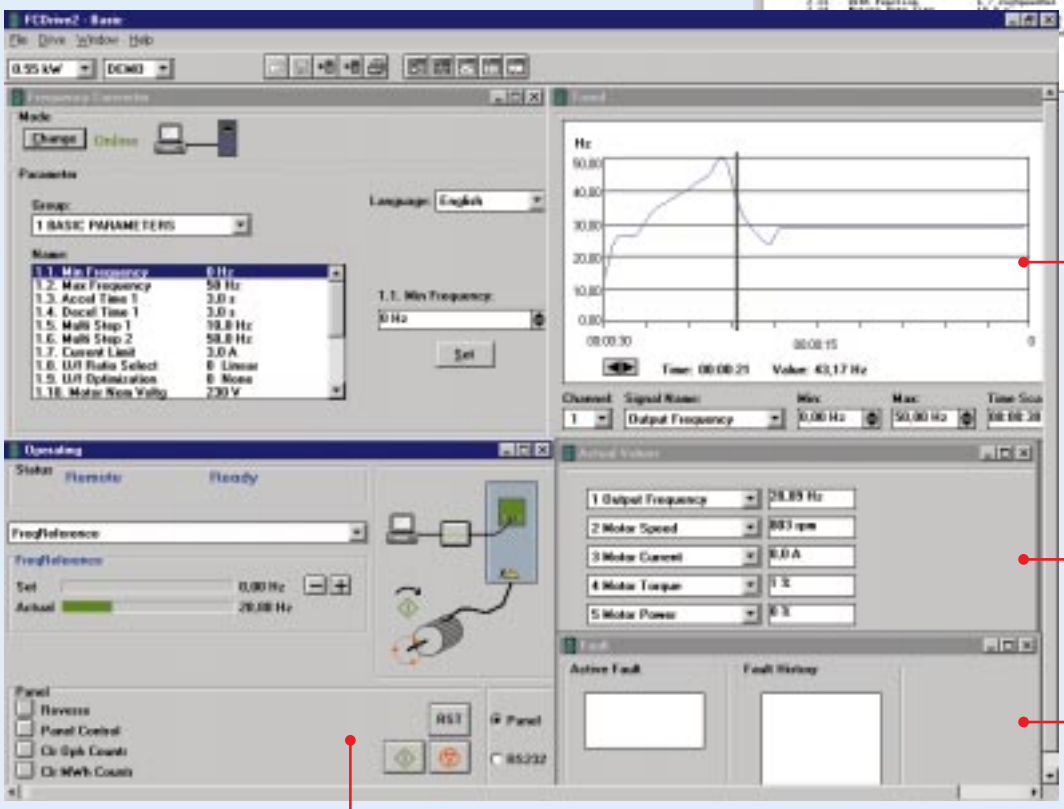

*On the **parameter pages**, you can edit parameters, print and save them and change the application itself. On the parameter pages all parameter groups and the respective parameters can be viewed in their own lists. The parameter value can be changed in the field to the right of the parameter list. The parameter setting mode is also changed from Offline to Online mode and vice versa here. Change of language is also done on the parameter page.*

*Up to 5 signals can be monitored simultaneously on the **monitoring page**.*

*On the **trend page**, you can follow three signals simultaneously. Only one of the signals, however, is visible on the display. The minimum and maximum values of the value axis and the length of the time axis can also be changed. The value and time of the signal can be read at the hair cursor in the Trend window. All normally measured variables can be monitored as trends.*

*On the **operation page** the motor can be started or stopped, references can be given and the active control source can be changed.*

*The **fault page** shows the active faults and the fault history. Both can be reset.*

FCLoad

FCLoad is a PC tool used to load the following programs to the frequency converter:

- system program (operating system)
- special applications
- additional programs related to the system program

The minimum PC hardware requirements correspond to those of FCDrive. FCLoad is mainly intended to be used by frequency converter professionals and service personnel, but because of the ease of use it is also very simple to load customized special applications to the frequency converter.



Loading of additional applications.

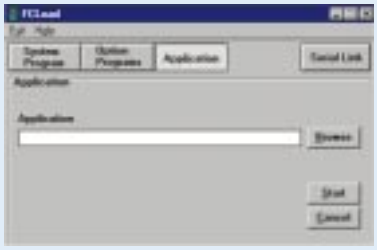

Loading of an application.

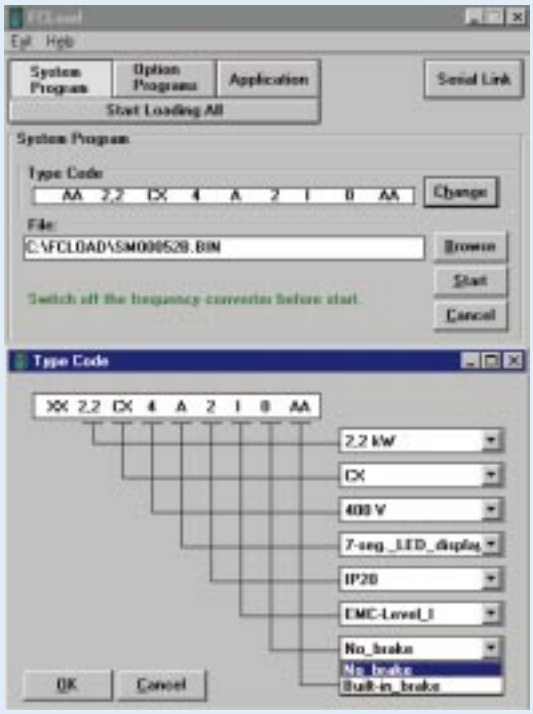

Loading of system program and choice of frequency converter type code.

Vacon FC1131-3 Engineering

The block programming feature of Vacon CX/CXL/CXS frequency converters open limitless possibilities to create customized applications. The tool complies with the IEC 1131-3 standard. Vacon FC1131-3 Engineering application programming tools can be used to customize the control logic and parameters of a frequency converter. A frequency converter equipped with a special application, an I/O expander board or a bus option board constitutes an ideal entity to be used e.g. by system engineers or OEM customers with special demands.

Working with the graphical application design tool is similar to programming a PLC with the FDB (Function Block Design) language, where the application can consist of more than 1000 function blocks. Besides all basic function blocks, more sophisticated function blocks such as different filters, PI-controllers, integrators etc. can be utilized in block programming. With this tool, it is possible to freely program parameters, fault messages and other application-related features.

When creating a new application, one of the Vacon frequency converter "Five in One+" applications is used as the basis which minimizes the time and work needed for the creation. We arrange training in block programming in Vaasa. Schedules can be found and downloaded on our Internet pages. Our skilled OEM Team will also be pleased to tell you more about matters concerning applications.

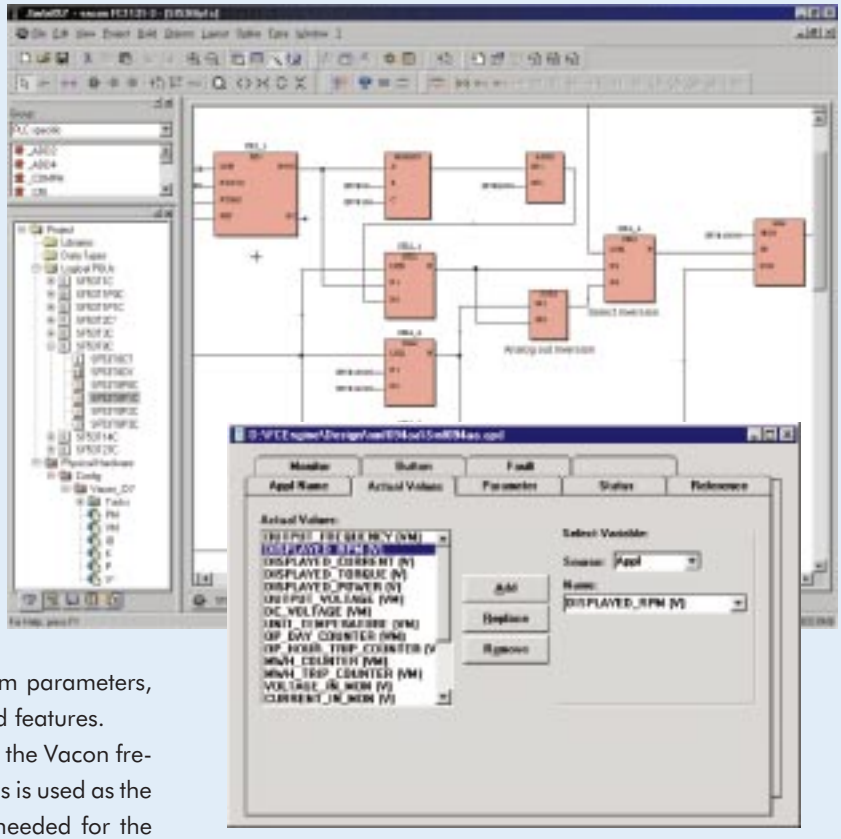

Vacon FC1131-3 Engineering - A graphical application design tool that complies with the IEC1131-3 standard.

Drives and the electrical environment

In most installations the process control also requires other equipment, computers, sensors etc. This equipment is often installed in close proximity, making it probable that they influence each other. There are two major mechanisms:

- Low frequency – harmonics
- High frequency – EMI.

Harmonic currents

All waveshapes (currents or voltages) can be expressed as the sum of the basic frequency (50 or 60 Hz) and higher multiples of this. In balanced three-phase systems you will find only odd harmonics. The even ones are cancelled based on symmetrical considerations.

Non-linear loads generate these harmonics, loads that draw currents that are not sinusoidal. Typical sources include rectifier bridges in power electronics, switch-mode power supplies in office equipment and fluorescent lamps. For three-phase rectifier loads the harmonic currents present are the 6xn ± 1, i.e. 5,7,11,13,17,19 etc. The magnitude of the currents decreases as the frequency increases.

The added harmonic current does not carry power, but is an added current flowing in the cables. Typical effects are overloading of conductors, a decrease in the power factor and may cause measuring systems to malfunction. The voltages created by these currents flowing in the reactance of the transformer might also damage other equipment or interfere with power line communication equipment.

Eliminating the problem

The magnitude of the harmonic currents decrease with increasing frequency, so in order to eliminate the problem, you concentrate on the lower frequencies. The easiest way is to increase the impedance at those frequencies with a choke. Drives without chokes generate significantly higher levels of harmonics than drives that have one. An *AC –choke* has the added effect of protecting the drive against spikes in the supply. All Vacon drives have AC chokes (with the exception of the < 3 kW CXS, which have small currents anyway). These chokes eliminate the harmonics to a large degree, but they cannot eliminate all harmonics.

For drives > 75 kW, *a twelve- or eighteen-pulse solution* is often used. This reduces the harmonics in the supply by eliminating the lowest harmonics. In a twelve-pulse solution

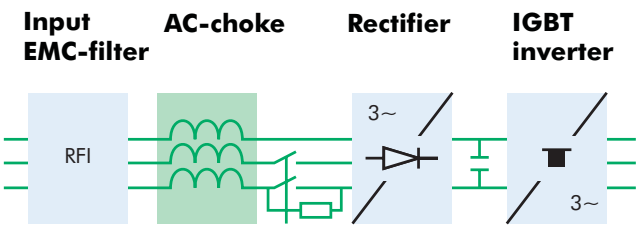

Vacon frequency converters have a built-in AC choke. The choke reduces the harmonic currents and protects the rectifier against voltage spikes in the supply (compare to a DC choke)

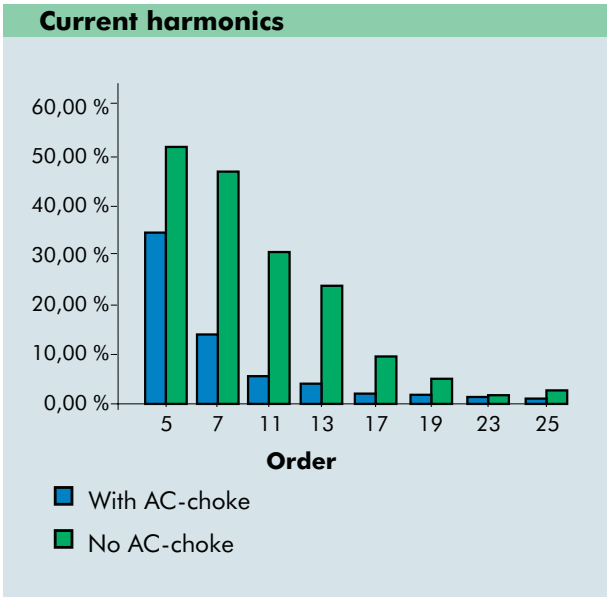

Comparison of 6-pulse rectifier with and without AC-choke

the lowest harmonics are the 11th and 13th, followed by the 23rd and 25th etc, with corresponding low levels. For the eighteen-pulse solution the harmonics are the 17th and 19th, etc. at still lower levels. The supply current is very close to a sinewave.

The effect of harmonics can be decreased in several other ways. One possibility is to use the *Vacon CXR regenerative drive*, which has an almost sinusoidal supply current (current THD normally <4%). The most common is to use notch filters to change the impedance of the supply at specific frequencies. These work well for stable, unchanging networks. Another way is to increase the supply transformer power, as the lower reactance will cause lower harmonic voltages. A third method is to use an active filter that compensates for the non-linearity of the load.

In the past few years, several standards have been published regarding harmonics, notably IEC 1000-3, IEC 1800-3 (EN61800-3), IEC 555 (EN60555) and IEEE 519-92. In a correctly designed system the Vacon drives comply with all these.

High frequency interference

High frequency interference are either radiated or conducted disturbances at frequencies > 9 kHz. The area of concern is 150 kHz to 1000 MHz.

These are generally caused by switching elements in any device, for example clocks in computers, switch-mode power supplies and the output switches of drives. The generated high-frequency disturbance can interfere with the functioning of other devices. The high frequency noise emitted from any device may influence by causing measuring systems and communication systems to malfunction, causing radio receivers to receive only noise. All effects combined may cause unexpected outages.

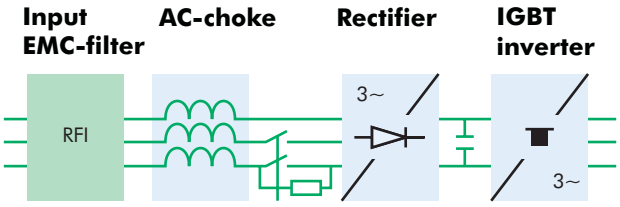

You can also add external RFI-filters to reduce the emission of N-level drives to the I-level.

Eliminating the problem

Two areas can be addressed: the immunity (standards EN50082-1,-2, EN61800-3) and the emissions (standards EN50081-1,-2, EN61800-3)

The generic standards EN50081 and 50082 as well as EN61800 for drives define levels of immunity and emission required for devices designed to operate in different environments. The Vacon drives are designed to operate in a variety of environments, so they all come with industrial strength immunity against RFI. This means that the drives will operate reliably in all environments.

The standards also define the level of emission accepted in the various environments. You can choose from three levels:

- N – No emission suppression – for users using the drive in a non-vulnerable environment and who handle emission suppression themselves.
- I – Emission suppression for the industrial level - for the general industrial environment.
- C – Emission suppression for the commercial level – for general use in a non-industrial environment.

We prefer to use the generic standards (EN50008x) as they are more stringent than the new product family standard EN61800-3.

Vaasa Control Ltd is the only manufacturer to offer drives with integrated C-level filters to the 90 kW level.

For all of these classes we have an EU Declaration of Conformity as well as a Technical Construction File (TCF), verified by FIMKO Ltd.

Frequency converter range	Emission level		
	N-level	I- level	C- level
Vacon CXS (0,55CXS-22CXS)	●	●	●
Vacon CXL (0,75CXL-90CXL)	●	●	●
Vacon CXL (110CXL-250CXL)	●	⊙	○
Vacon CX/C (2,2CX/C – 1500CX/C)	●	⊙	○

⊙ = complies, if equipped with an external RFI filter
● = complies with inbuilt filter
○ = does not comply

Radiated emission limits dBuV/m at 10m distance

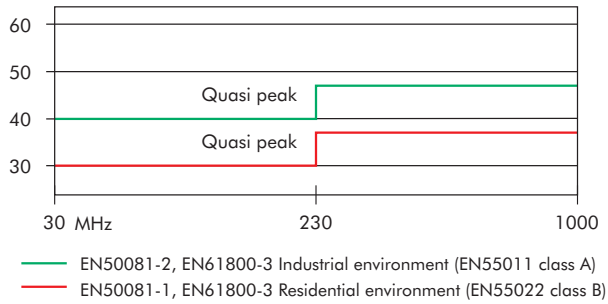

Conducted radiation limits

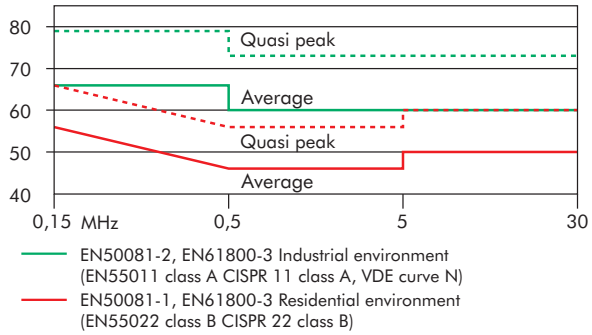

EMC standards

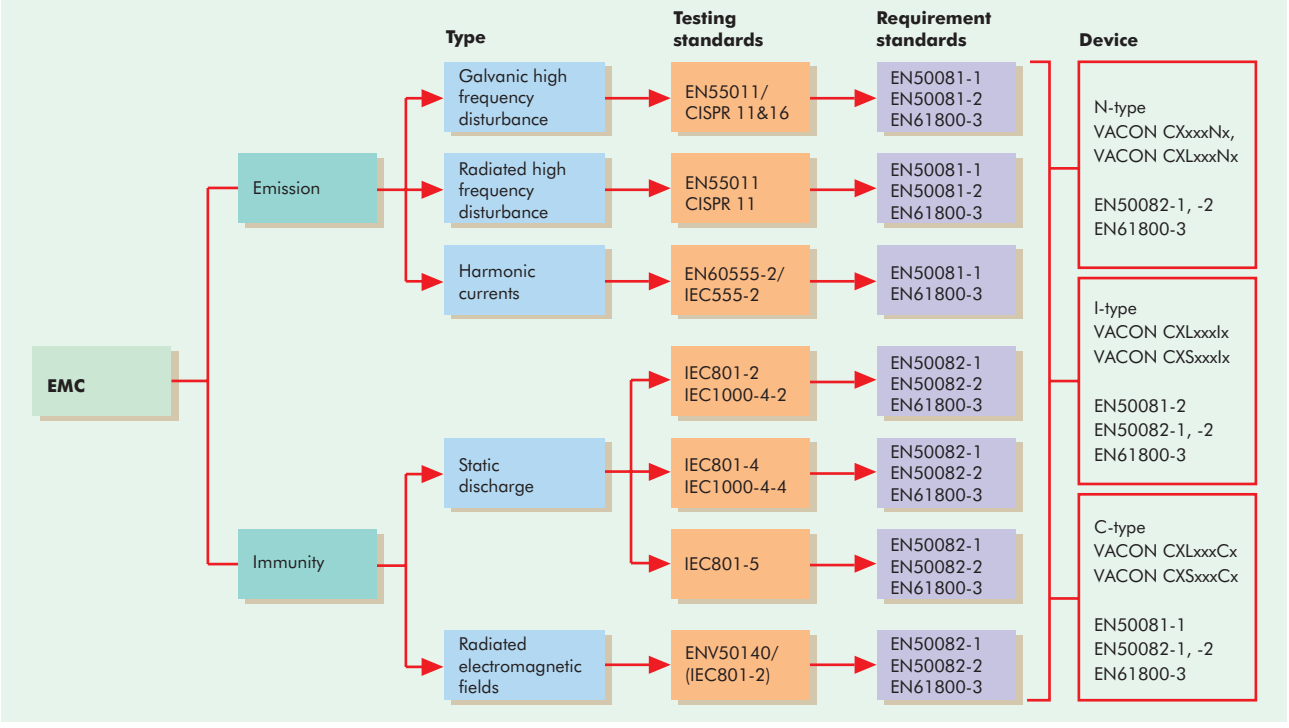

Cabling

We recommend the use of shielded cables with Vacon Frequency Converters. You can, however, use unshielded mains supply cables to save on cable cost. Beside conventional copper cable, aluminium cable can be used with Vacon frequency converters above 30kW. Route the motor cable as far away from other cables as possible.

Avoid placing the motor cables parallel to other cables.

Cable type	N level	I level	C level
Mains cable	1	1	1
Motor cable	2	2	3
Control cable	4	4	4

Cable types for different EMC levels.

1 = For fixed installation; Power cable for the used supply voltage. No shield necessary.
2 = Concentric neutral power cable for the used supply voltage
3 = Power cable equipped with tight low-impedance shield for the used supply voltage
4 = Protected control cable equipped with tight low-impedance shield.

Motor cables should cross other cables at a 90 degrees angle. The motor cable must be earthed at both ends; frequency converter end and motor end. The maximum length of the motor cable in Vacon frequency converters is 200 m with the exception of:

- Vacon 0,75-1,1CXS 50 m
- Vacon 1,5CXS - 100 m

The cables must possess a heat resistance of at least +60°C. The dimensioning of the cable and fuses must be done according to the Vacon drive actual ouput current (see I_{CT} and I_{VT}).

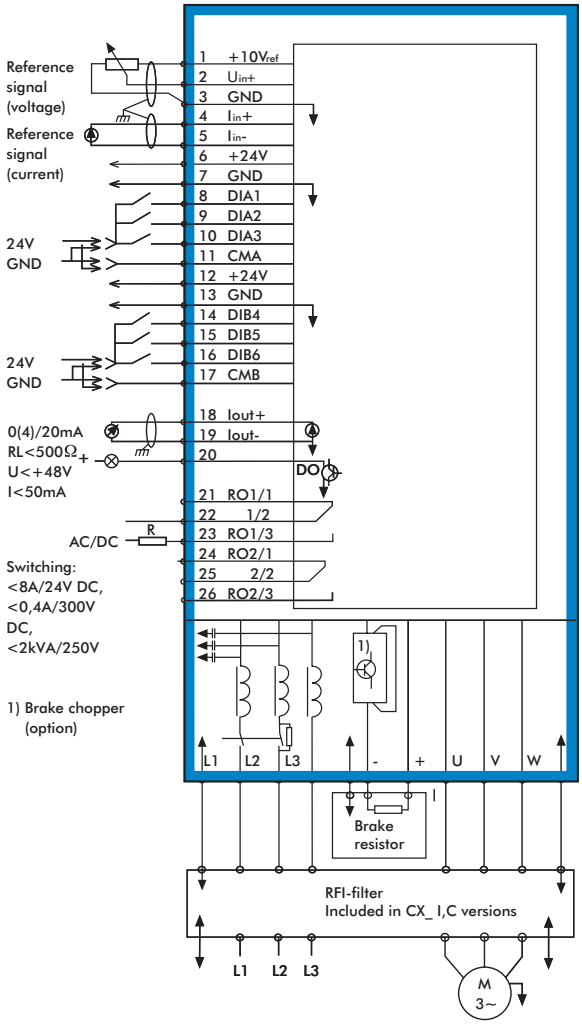

CX4 CXL4 CXS4	Constant torque applicaton			Variable torque application		
	I_{CT} [A]	Fuse [A]	Cu-cable [mm²]	I_{VT} [A]	Fuse [A]	Cu-cable [mm²]
0,75	2,5	10	3*1,5+1,5	3,5	10	3*1,5+1,5
1,1	3,5	10	3*1,5+1,5	4,5	10	3*1,5+1,5
1,5	4,5	10	3*1,5+1,5	6,5	10	3*1,5+1,5
2,2	6,5	10	3*1,5+1,5	8	10	3*1,5+1,5
3,0	8	10	3*1,5+1,5	10	10	3*1,5+1,5
4,0	10	10	3*1,5+1,5	13	16	3*2,5+2,5
5,5	13	16	3*2,5+2,5	18	20	3*4+4
7,5	18	20	3*4+4	24	25	3*6+6
11	24	25	3*6+6	32	35	3*10+10
15	32	35	3*10+10	42	50	3*10+10
18,5	42	50	3*10+10	48	50	3*10+10
22	48	50	3*10+10	60	63	3*16+16
30	60	63	3*16+16	75	80	3*25+16
37	75	80	3*25+16	90	100	3*35+16
45	90	100	3*35+16	110	125	3*50+25
55	110	125	3*50+25	150	160	3*70+35
75	150	160	3*70+35	180	200	3*95+50
90	180	200	3*95+50	210	250	3*150+70
110	210	250	3*150+70	270	315	3*185+95
132	270	315	3*185+95	325	400	2*(3*120+70)
160	325	400	2*(3*120+70)	410	500	2*(3*185+95)
200	410	500	2*(3*185+95)	510	630	2*(3*240+120)
250	510	630	2*(3*240+120)	580	630	2*(3*240+120)

Line and motor cable recommendations for the 380-440 V series

CX5 CXL5 CXS5	Constant torque applicaton			Variable torque application		
	I_{CT} [A]	Fuse [A]	Cu-cable[mm²]	I_{VT} [A]	Fuse [A]	Cu-cable[mm²]
0,75	2,5	10	3*1,5+1,5	3	10	3*1,5+1,5
1,1	3	10	3*1,5+1,5	3,5	10	3*1,5+1,5
1,5	3,5	10	3*1,5+1,5	5	10	3*1,5+1,5
2,2	5	10	3*1,5+1,5	6	10	3*1,5+1,5
3,0	6	10	3*1,5+1,5	8	10	3*1,5+1,5
4,0	8	10	3*1,5+1,5	11	16	3*2,5+2,5
5,5	11	16	3*2,5+2,5	15	20	3*4+4
7,5	15	20	3*4+4	21	25	3*6+6
11	21	25	3*6+6	27	35	3*10+10
15	27	35	3*10+10	34	50	3*10+10
18,5	34	50	3*10+10	40	50	3*10+10
22	40	50	3*10+10	52	63	3*16+16
30	52	63	3*16+16	65	80	3*25+16
37	65	80	3*25+16	77	100	3*35+16
45	77	100	3*35+16	96	125	3*50+25
55	96	125	3*50+25	125	160	3*70+35
75	125	160	3*70+35	160	200	3*95+50
90	160	200	3*95+50	180	200	3*95+50
110	180	200	3*95+50	220	250	3*150+70
132	220	350	3*150+70	260	315	3*185+95
160	260	315	3*185+95	320	400	2*(3*120+70)
200	320	400	2*(3*120+70)	400	500	2*(3*185+95)
250	400	500	2*(3*185+95)	460	630	2*(3*240+120)

Line and motor cable recommendations for the 460-500 V series

I/O connections

The I/O connections for all Vacon CX, CXL and CXS frequency converters are the same. The basic board has 2 analogue inputs, 6 digital inputs, 1 analogue output, 2 relay outputs, 1 digital output (open collector output) and auxiliary voltages.

The number of frequency converter I/Os can be increased with Vacon CX10xOPT expander boards(see Options).

Control connections are galvanically separated from the drive frame. Digital input groups A and B and the relay outputs are galvanically separated from the signal ground.

The active signal level of the control signals depends on the connections of the common inputs CMA and CMB (terminals 11 and 17). The alternatives are the +24 V control voltage or ground (0V).

Changing from one application to another redefines the I/O to the default of the chosen application.

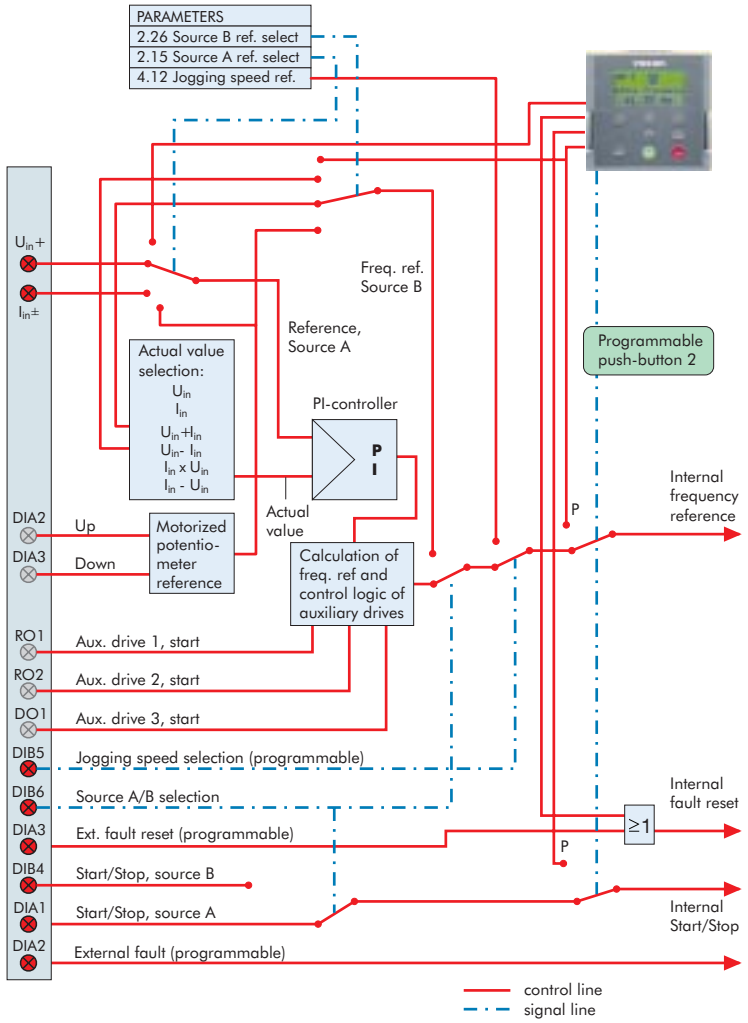

Control signal logic. An example for the Pump and Fan Control Application

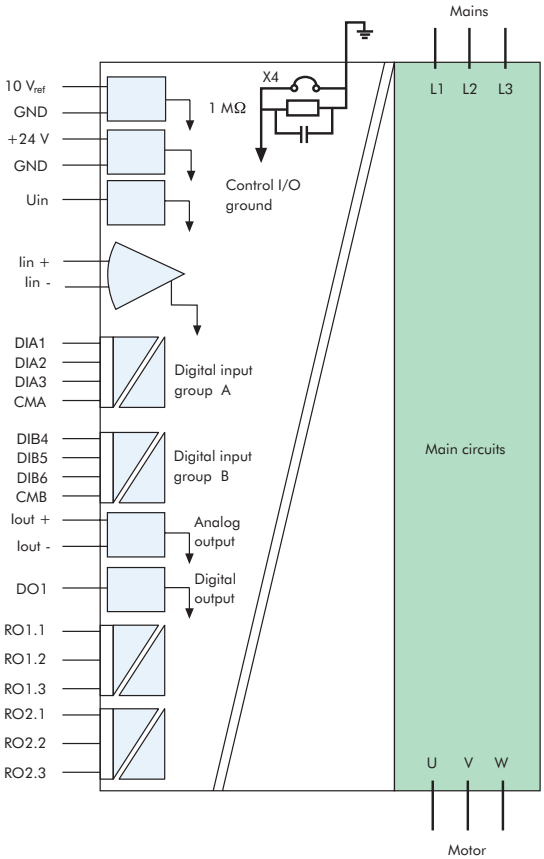

Galvanic separations

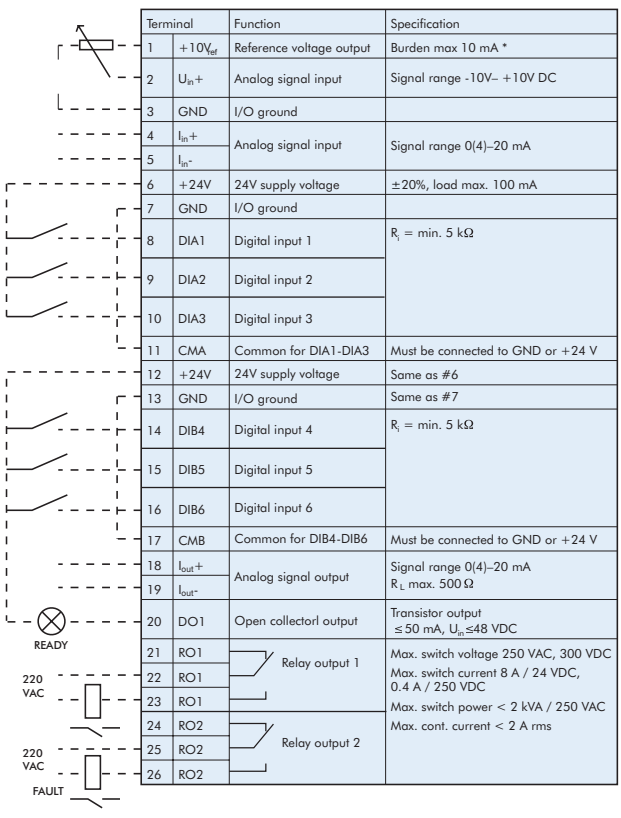

Terminal		Function	Specification
1	+10Vref	Reference voltage output	Burden max 10 mA *
2	Uin+	Analog signal input	Signal range -10V– +10V DC
3	GND	I/O ground	
4	Iin+	Analog signal input	Signal range 0(4)–20 mA
5	Iin-		
6	+24V	24V supply voltage	±20%, load max. 100 mA
7	GND	I/O ground	
8	DIA1	Digital input 1	Ri = min. 5 kΩ
9	DIA2	Digital input 2	
10	DIA3	Digital input 3	
11	CMA	Common for DIA1-DIA3	Must be connected to GND or +24 V
12	+24V	24V supply voltage	Same as #6
13	GND	I/O ground	Same as #7
14	DIB4	Digital input 4	Ri = min. 5 kΩ
15	DIB5	Digital input 5	
16	DIB6	Digital input 6	
17	CMB	Common for DIB4-DIB6	Must be connected to GND or +24 V
18	Iout+	Analog signal output	Signal range 0(4)–20 mA RL max. 500 Ω
19	Iout-		
20	DO1	Open collectorl output	Transistor output ≤ 50 mA, Uin≤48 VDC
21	RO1	Relay output 1	Max. switch voltage 250 VAC, 300 VDC Max. switch current 8 A / 24 VDC, 0.4 A / 250 VDC Max. switch power < 2 kVA / 250 VAC Max. cont. current < 2 A rms
22	RO1		
23	RO1		
24	RO2	Relay output 2	
25	RO2		
26	RO2		

Control terminal signals. If potentiometer reference is used, the potentiometer R = 1..10 kΩ (linear)

Installation

Install your Vacon frequency converters vertically. Due to it´s slim, space saving design and small size, Vacon frequency converters can easily be mounted on the wall or in an enclosure even if space is limited.

When installing the frequency converter in an enclosure, make sure you do not constrict the cooling air flow in any way, either on the suction or the exhaust side. For example 5,5CX4 requires around 70m^3/h and 1500CX4 around 9000 m^3/h fresh cooling air! Also make sure that there is no recirculation of air within the enclosure. Free space around the frequency converter guarantees sufficient air circulation and cooling. Changing the fan, if necessary, is then also easier.

Installation space. a2=distance between frequency converters. The dimensions includes the space for changing the fan. If multiple units are to be installed above each other the distances must be b+c and the air from the outlet of the lower unit must be directed away from the inlet of the upper unit.

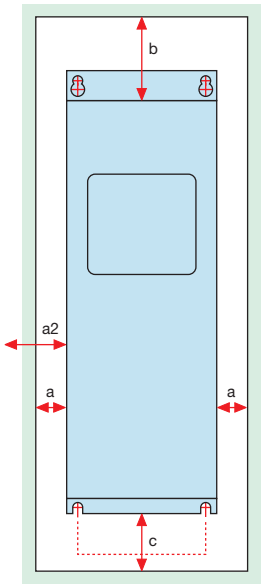

	380-500 V, CX IP20 (M4-M6)/IP00 (M7-M10)							380-500 V, CXL IP21/54 (M10 only IP20)						
	M4	M5	M6	M7	M8	M9	M10	M4	M5	M6	M7	M8	M9	M10
a	20	20	30	75	250	200	200	20	20	30	75	250	200	200
a2	10	10	10	75	75	75	75	20	20	30	75	75	75	75
b	100	120	160	300	300	300	300	100	120	160	300	300	300	300
c	50	60	80	100	—	—	—	50	60	80	100	—	—	—
w1	120	157	220	250	496	700	989	120	157	220	374	496	700	989
w2	95	127	180	220	456	660	948	95	127	180	345	456	660	948
h1	323	452	575	854	950	1045	1045	423	562	700	1050	1350	1470	1470
h2	312	434	558	835	926	1021	1021	412	545	683	1031	926	1021	1021
h3	290	405	525	800	890	1000	1000	390	515	650	1000	1290	1425	1425
h4	40	45	100	*	—	—	—	—	—	—	—	—	—	—
d1	215	238	290	315	353	390	390	215	238	290	330	353	390	390
r1	7	9	9	9	11,5	11,5	11,5	7	9	9	9	11,5	11,5	11,5
r2	3,5	4,5	4,5	4,5	6	6	6	3,5	4,5	4,5	4,5	6	6	6
	525-690 V, CX IP20 (M5-M6)/IP00(M8-M10)							208 - 230 V, CXL IP21/54						
a		20	30		250	200	200	20	20	30	75	250		
a2		10	10		75	75	75	20	20	30	75	75		
b		120	160		300	300	300	100	120	160	300	300		
c		60	80		—	—	—	50	60	80	100	—		
w1		157	220		496	700	989	120	157	220	374	496		
w2		127	180		456	660	948	95	127	180	345	456		
h1		486	668		950	1045	1045	423	562	700	1050	1350		
h2		470	650		926	1021	1021	412	545	683	1031	926		
h3		440	618		890	1000	1000	390	515	650	1000	1290		
h4		45	100		—	—	—	—	—	—	—	—		
d1		265	290		353	390	390	215	238	290	330	353		
r1		9	9		11,5	11,5	11,5	7	9	9	9	11,5		
r2		4,5	4,5		6	6	6	3,5	4,5	4,5	4,5	6		

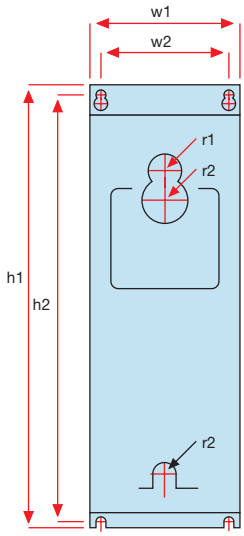

	208 - 230 V, CX IP20 (M4-M6)/IP00(M7-M8)					380-500 V, CXS IP20			208 - 230 V, CXS IP20		
	M4	M5	M6	M7	M8	M3	M4B	M5B	M3	M4B	M5B
a	20	20	30	75	250	20	20	20	20	20	20
a2	10	10	10	75	75	10	10	10	10	10	10
b	100	120	160	300	300	100	120	120	100	120	120
c	50	60	80	100	—	50	60	60	50	60	60
w1	120	157	220	250	496	120	135	185	120	135	185
w2	95	127	180	220	456	95	95	140	95	95	140
h1	323	452	575	854	950	343	430	595	343	430	595
h2	312	434	558	835	926	333	420	580	333	420	580
h3	290	405	525	800	890	305	390	550	305	390	550
h4	40	45	100	*	—	—	—	—	—	—	—
d1	215	238	290	315	353	150	205	215	150	205	215
r1	7	9	9	9	11.5	7	9	7	7	7	9
r2	3,5	4,5	4,5	4,5	6	3,5	3,5	4,5	3,5	3,5	4,5

Installation space and mounting dimensions for Vacon CX, CXL and CXS frequency converters. Dimensions are according to the mechanical size and product family. You will find the mechanical sizes on the Typespecific data page. If such information is needed for mechanical sizes M11-M13, please contact to your nearest Vacon partner.

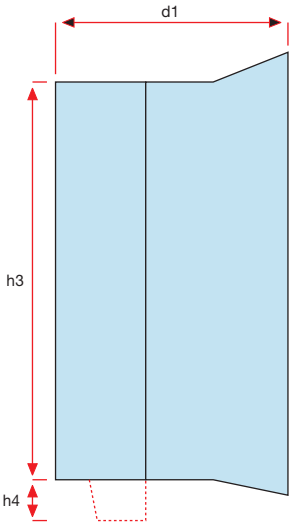

Mounting dimensions.