Battery Charger Flash MCU

HT45F5Q-5

Revision: V1.00 Date: August 22, 2023

www.holtek.com

Table of Contents

Features **7**
CPU Features 7
Peripheral Features 7
General Description **8**
Block Diagram **9**
Pin Assignment **9**
Pin Descriptions **11**
Absolute Maximum Ratings **14**
D.C. Characteristics **14**
Operating Voltage Characteristics 14
Operating Current Characteristics 14
Standby Current Characteristics 15
A.C. Characteristics **15**
Internal High Speed Oscillator – HIRC – Frequency Accuracy 15
Internal Low Speed Oscillator Characteristics – LIRC 15
Operating Frequency Characteristic Curves 16
System Start Up Time Characteristics 16
Input/Output Characteristics **17**
Input/Output (without Multi-power) D.C. Characteristics 17
Input/Output (with Multi-power) D.C. Characteristics 18
Memory Characteristics **18**
Software Controlled LCD Driver Electrical Characteristics **19**
LVR Electrical Characteristics **19**
A/D Converter Electrical Characteristics **20**
Reference Voltage Characteristics **20**
Operational Amplifier Electrical Characteristics **21**
14-bit D/A Converter Electrical Characteristics **21**
I²C Electrical Characteristics **22**
Power-on Reset Characteristics **23**
System Architecture **23**
Clocking and Pipelining 23
Program Counter 24
Stack 25
Arithmetic and Logic Unit – ALU 27
Flash Program Memory **27**
Structure 27
Special Vectors 28
Look-up Table 28

Table Program Example 28
In Circuit Programming – ICP 29
On-Chip Debug Support – OCDS 30
In Application Programming – IAP 30

Data Memory 46
Structure 46
Data Memory Addressing 47
General Purpose Data Memory 47
Special Purpose Data Memory 47

Special Function Register Description 49
Indirect Addressing Registers – IAR0, IAR1, IAR2 49
Memory Pointers – MP0, MP1H/MP1L, MP2H/MP2L 49
Accumulator – ACC 51
Program Counter Low Byte Register – PCL 51
Look-up Table Registers – TBLP, TBHP, TBLH 51
Status Register – STATUS 51

EEPROM Data Memory 53
EEPROM Data Memory Structure 53
EEPROM Registers 53
Read Operation from the EEPROM 55
Page Erase Operation to the EEPROM 56
Write Operation to the EEPROM 56
Write Protection 58
EEPROM Interrupt 58
Programming Considerations 58

Oscillators 61
Oscillator Overview 61
System Clock Configurations 61
Internal High Speed RC Oscillator – HIRC 61
Internal 32kHz Oscillator – LIRC 62

Operating Modes and System Clocks 62
System Clocks 62
System Operation Modes 63
Control Registers 64
Operating Mode Switching 65
Standby Current Considerations 68
Wake-up 69

Watchdog Timer 69
Watchdog Timer Clock Source 69
Watchdog Timer Control Register 69
Watchdog Timer Operation 71

Reset and Initialisation **72**
Reset Functions 72
Reset Initial Conditions 76
Input/Output Ports **80**
Pull-high Resistors 80
Port A Wake-up 81
I/O Port Control Registers 81
I/O Port Power Source Control 82
Pin-shared Functions 83
I/O Pin Structures 87
READ PORT Function 88
Programming Considerations 90
Timer Modules – TM **90**
Introduction 90
TM Operation 91
TM Clock Source 91
TM Interrupts 91
TM External Pins 91
Programming Considerations 92
Compact Type TM – CTM **93**
Compact Type TM Operation 93
Compact Type TM Register Description 94
Compact Type TM Operating Modes 98
Standard Type TM – STM **104**
Standard TM Operation 105
Standard Type TM Register Description 105
Standard Type TM Operation Modes 111
Analog to Digital Converter – ADC **122**
A/D Converter Overview 122
A/D Converter Register Description 123
A/D Converter Operation 126
A/D Converter Reference Voltage 127
A/D Converter Input Signals 127
Conversion Rate and Timing Diagram 128
Summary of A/D Conversion Steps 128
Programming Considerations 129
A/D Converter Transfer Function 129
A/D Programming Examples 130
Battery Charge Module **132**
Battery Charge Module Registers 133
Digital to Analog Converter 133
Operational Amplifiers 135

Serial Interface Module – SIM 136
SPI Interface 136
I²C Interface 144
UART Interface 153
UART External Pins 154
UART Single Wire Mode 154
UART Data Transfer Scheme 154
UART Status and Control Registers 155
Baud Rate Generator 162
UART Setup and Control 163
UART Transmitter 165
UART Receiver 166
Managing Receiver Errors 167
UART Interrupt Structure 168
UART Power Down and Wake-up 170
Software Control LCD Driver 170
LCD Operation 170
LCD Control Registers 171
Cyclic Redundancy Check – CRC 171
CRC Registers 171
CRC Operation 173
CRC Computation 173
Interrupts 175
Interrupt Registers 175
Interrupt Operation 181
External Interrupts 181
A/D Converter Interrupt 182
Multi-function Interrupts 182
Timer Module Interrupts 182
EEPROM Interrupt 183
Time Base Interrupts 183
Serial Interface Module Interrupt 185
UART Interrupt 185
Programming Considerations 185
Application Descriptions 186
Introduction 186
Functional Description 186
Hardware Circuit 187
Instruction Set 188
Introduction 188
Instruction Timing 188
Moving and Transferring Data 188
Arithmetic Operations 188

Logical and Rotate Operation 189
Branches and Control Transfer 189
Bit Operations 189
Table Read Operations 189
Other Operations 189

Instruction Set Summary 190
Table Conventions 190
Extended Instruction Set 192

Instruction Definition 194
Extended Instruction Definition 203

Package Information 210
24-pin SSOP (150mil) Outline Dimensions 211
28-pin SSOP (150mil) Outline Dimensions 212
SAW Type 32-pin QFN (4mm×4mm×0.75mm) Outline Dimensions 213

Features

CPU Features

- Operating Voltage
  - f_{SYS}=8MHz: 2.2V~5.5V
- Up to 0.5μs instruction cycle with 8MHz system clock at V_{DD}=5V
- Power down and wake-up functions to reduce power consumption
- Oscillator Types
  - Internal High Speed 8MHz RC – HIRC
  - Internal Low Speed 32kHz RC – LIRC
- Fully integrated internal oscillators require no external components
- Multi-mode operation: FAST, SLOW, IDLE and SLEEP
- All instructions executed in 1~3 instruction cycles
- Table read instructions
- 115 powerful instructions
- 8-level subroutine nesting
- Bit manipulation instruction

Peripheral Features

- Flash Program Memory: 8K×16
- Data Memory: 512×8
- True EEPROM Memory: 512×8
- In Application Programming function – IAP
- Watchdog Timer function
- 27 bidirectional I/O lines
- 4 external interrupt lines shared with I/O pins
- Multiple Timer Modules for time measure, input capture, compare match output, PWM output function or single pulse output function
- Dual Time Base functions for generation of fixed time interrupt signals
- 11 external channel 12-bit resolution A/D converter with Internal Reference Voltage V_{VR}
- Battery charger circuit
  - 14-bit D/A Converter and OPA0 are used for constant current control
  - 14-bit D/A Converter and OPA1 are used for constant voltage control
  - OPA2 is 20/40 times amplifier for current sense
- Serial Interface Module – SIM for SPI or I^2C interface
- Fully-duplex / Half-duplex Universal Asynchronous Receiver and Transmitter Interface – UART
- Software controlled 4-SCOM line LCD driver with 1/2 bias
- Integrated 16-bit Cyclic Redundancy Check function – CRC
- Low voltage reset function
- Package types: 24/28-pin SSOP, 32-pin QFN

General Description

The HT45F5Q-5 is a Flash Memory A/D type 8-bit high performance RISC architecture microcontroller especially designed for battery charger applications.

For memory features, the Flash Memory offers users the convenience of Flash Memory multi-programming features. Other memory includes an area of RAM Data Memory as well as an area of true EEPROM memory for storage of non-volatile data such as serial numbers, calibration data etc. By using the In Application Programming technology, user have a convenient means to directly store their measured data in the Flash Program Memory as well as having the ability to easily update their application programs.

Analog feature includes a multi-channel 12-bit A/D converter function. Multiple and extremely flexible Timer Modules provide timing, pulse generation and PWM generation functions. Communication with the outside world is catered for by including fully integrated SPI, UART and I^2C interface functions, three popular interfaces which provide designers with a means of easy comminucation with external peripheral hardware. Protective features such as an internal Watchdog Timer and Low Voltage Reset coupled with excellent noise immunity and ESD protection ensure that reliable operation is maintained in hostile electrical environments.

A full choice of internal low and high speed oscillators is provided including two fully integrated system oscillators which require no external components for their implementation. The ability to operate and switch dynamically between a range of operating modes using different clock sources gives users the ability to optimise microcontroller operation and minimise power consumption.

For AC/DC charger applications, the device includes a battery charger management module, which can be used for the constant voltage and constant current closed loop charging control. The device therefore reduces the need for the usually required external TL431 component, operational amplifier and resistance analogic D/A Converter in traditional battery charging circuits. Therefore the peripheral circuit is more reduced, resulting in a smaller PCB area.

The charger management module is composed of two parts. The first part contains two groups of OPAs and D/A Converters, which are used to control the charging voltage and current. The upper limit value of the charger constant current and constant voltage can be obtained by configuring the D/A Converters in the software. The 14-bit D/A Converter is used for constant current control while another 14-bit D/A Converter is used for constant voltage control. The second part of the charger management contains an operational amplifier with the gain of 20 or 40 which is used for current amplification. This improves the current resolution and allows the use of smaller current detection resistors thus reducing the resistor power consumption.

The D/A Converter in the charger management module is not only used for setting charging voltage and current, but also can be used together with the specific charger production fixtures for improving the traditional manual calibration techniques. By using the external production fixtures, the charger current voltage/current conditions can be confirmed. If the margin of errors is exceeded, the MCU will correct the error by fine tuning the D/A Converter, and store the corrected parameters to EEPROM. When the charger is recharged, the D/A Converter will be given a new correction value to implement correction purpose. Refer to the Holtek application notes for more details.

The inclusion of flexible I/O programming features, Time Base functions along with many other features, further enhance device functionality and flexibility for wide range of application possibilities.

Block Diagram

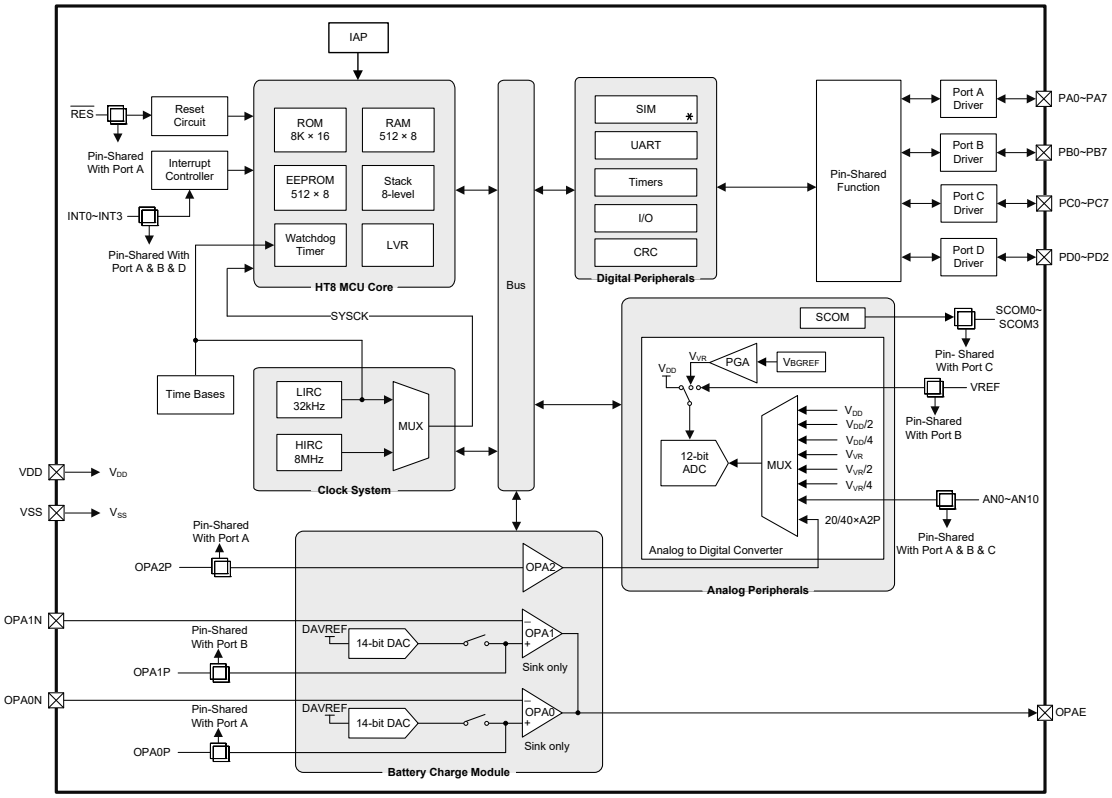

: Pin-Shared Node ∗ : SIM including SPI & I²C

Pin Assignment

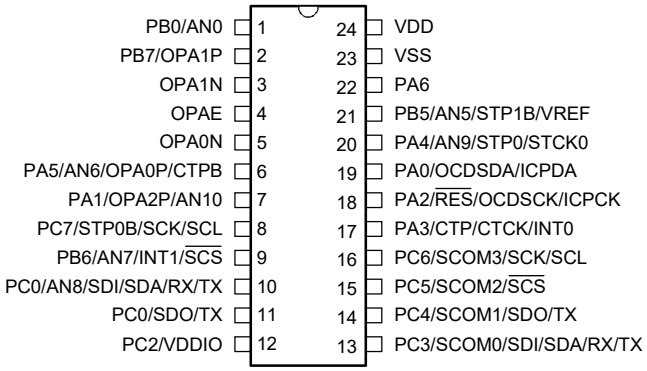

HT45F5Q-5/HT45V5Q-5
24 SSOP-A

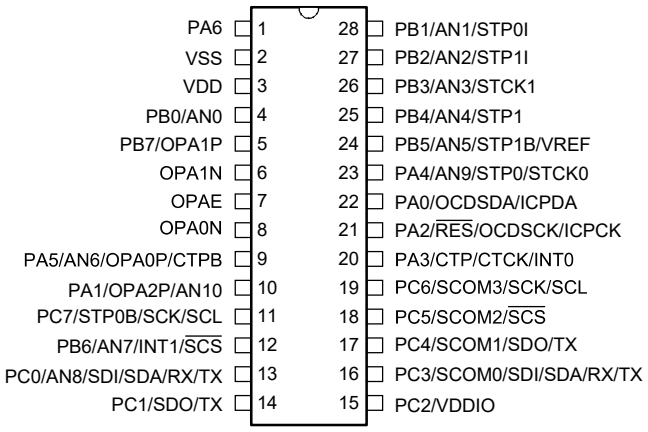

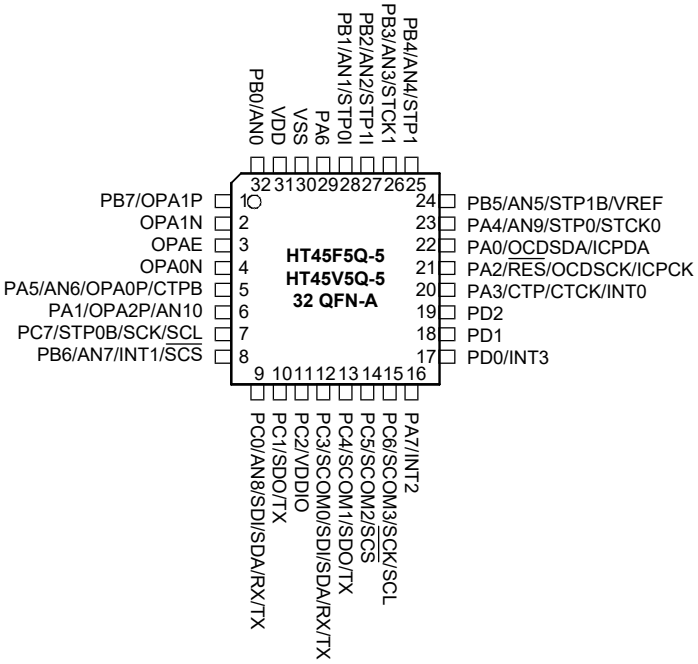

Note: 1. If the pin-shared pin functions have multiple outputs, the desired pin-shared function is determined by the corresponding software control bits.

2. The OCDSDA and OCDSCK pins are supplied for the OCDS dedicated pins and as such only available for the HT45V5Q-5 device which is the OCDS EV chip for the HT45F5Q-5 device.

3. For the less pin-count package type there will be unbounded pins which should be properly configured to avoid unwanted power consumption resulting from floating input conditions. Refer to the “Standby Current Considerations” and “Input/Output Ports” sections.

Pin Descriptions

The function of each pin is listed in the following table, however the details behind how each pin is configured is contained in other sections of the datasheet. As the pin description table shows the situation for the package with the most pins, not all pins in the table will be available on smaller package sizes.

Pin Name	Function	OPT	I/T	O/T	Description
PA0/OCDSDA/ICPDA	PA0	PAPU PAWU	ST	CMOS	General purpose I/O. Register enabled pull-high and wake-up
	OCDSDA	—	ST	CMOS	OCDS data/address pin
	ICPDA	—	ST	CMOS	ICP data/address pin
PA1/OPA2P/AN10	PA1	PAPU PAWU PAS0	ST	CMOS	General purpose I/O. Register enabled pull-high and wake-up
	OPA2P	PAS0	AN	—	Operational amplifier 2 positive input
	AN10	PAS0	AN	—	A/D Converter analog input
PA2/$\overline{\text{RES}}$/OCDSCK/ICPCK	PA2	PAPU PAWU RSTC	—	CMOS	General purpose output pin
	$\overline{\text{RES}}$	RSTC	ST	—	External reset input
	OCDSCK	—	ST	—	OCDS clock pin
	ICPCK	—	ST	—	ICP clock pin
PA3/CTP/CTCK/INT0	PA3	PAPU PAWU PAS0	ST	CMOS	General purpose I/O. Register enabled pull-high and wake-up
	CTP	PAS0	—	CMOS	CTM output
	CTCK	PAS0	ST	—	CTM clock input
	INT0	PAS0 INTEG INTC0	ST	—	External interrupt
PA4/AN9/STP0/STCK0	PA4	PAPU PAWU PAS1	ST	CMOS	General purpose I/O. Register enabled pull-high and wake-up
	AN9	PAS1	AN	—	A/D Converter analog input
	STP0	PAS1	—	CMOS	STM0 output
	STCK0	PAS1	ST	—	STM0 clock input
PA5/AN6/OPA0P/CTPB	PA5	PAPU PAWU PAS1	ST	CMOS	General purpose I/O. Register enabled pull-high and wake-up
	AN6	PAS1	AN	—	A/D Converter analog input
	OPA0P	PAS1	AN	—	Operational amplifier 0 positive input
	CTPB	PAS1	—	CMOS	CTM inverted output
PA6	PA6	PAPU PAWU PAS1	ST	CMOS	General purpose I/O. Register enabled pull-high and wake-up
PA7/INT2	PA7	PAPU PAWU	ST	CMOS	General purpose I/O. Register enabled pull-high and wake-up
	INT2	INTEG INTC2	ST	—	External interrupt
PB0/AN0	PB0	PBPU PBS0	ST	CMOS	General purpose I/O. Register enabled pull-high
	AN0	PBS0	AN	—	A/D Converter analog input

Pin Name	Function	OPT	I/T	O/T	Description
PB1/AN1/STP0I	PB1	PBPU PBS0	ST	CMOS	General purpose I/O. Register enabled pull-high
	AN1	PBS0	AN	—	A/D Converter analog input
	STP0I	PBS0	ST	—	STM0 capture input
PB2/AN2/STP1I	PB2	PBPU PBS0	ST	CMOS	General purpose I/O. Register enabled pull-high
	AN2	PBS0	AN	—	A/D Converter analog input
	STP1I	PBS0	ST	—	STM1 capture input
PB3/AN3/STCK1	PB3	PBPU PBS0	ST	CMOS	General purpose I/O. Register enabled pull-high
	AN3	PBS0	AN	—	A/D Converter analog input
	STCK1	PBS0	ST	—	STM1 clock input
PB4/AN4/STP1	PB4	PBPU PBS1	ST	CMOS	General purpose I/O. Register enabled pull-high
	AN4	PBS1	AN	—	A/D Converter analog input
	STP1	PBS1	—	CMOS	STM1 output
PB5/AN5/STP1B/VREF	PB5	PBPU PBS1	ST	CMOS	General purpose I/O. Register enabled pull-high
	AN5	PBS1	AN	—	A/D Converter analog input
	STP1B	PBS1	—	CMOS	STM1 inverted output
	VREF	PBS1	AN	—	A/D Converter external reference voltage input
PB6/AN7/INT1/$\overline{\text{SCS}}$	PB6	PBPU PBS1	ST	CMOS	General purpose I/O. Register enabled pull-high
	AN7	PBS1	AN	—	A/D Converter analog input
	INT1	PBS1 INTEG INTC0	ST	—	External interrupt
	$\overline{\text{SCS}}$	PBS1 IFS	ST	CMOS	SPI slave select
PB7/OPA1P	PB7	PBPU PBS1	ST	CMOS	General purpose I/O. Register enabled pull-high
	OPA1P	PBS1	AN	—	Operational amplifier 1 positive input
PC0/AN8/SDI/SDA/ RX/TX	PC0	PCPU PCS0	ST	CMOS	General purpose I/O. Register enabled pull-high
	AN8	PCS0	AN	—	A/D Converter analog input
	SDI	PCS0 IFS	ST	—	SPI serial data input
	SDA	PCS0 IFS	ST	NMOS	I^2C data line
	RX/TX	PCS0 IFS	ST	CMOS	UART serial data input in full-duplex communication or UART serial data input/output in single wire mode communication
PC1/SDO/TX	PC1	PCPU PCS0	ST	CMOS	General purpose I/O. Register enabled pull-high
	SDO	PCS0	—	CMOS	SPI serial data output
	TX	PCS0	—	CMOS	UART serial data output
PC2/VDDIO	PC2	PCPU PCS0	ST	CMOS	General purpose I/O. Register enabled pull-high
	VDDIO	PCS0	PWR	—	PB6, PC0~PC1 and PC3~PC7 pin power

Pin Name	Function	OPT	I/T	O/T	Description
PC3/SCOM0/SDI/SDA/RX/TX	PC3	PCPU PCS0	ST	CMOS	General purpose I/O. Register enabled pull-high
	SCOM0	PCS0	—	AN	Software controlled LCD common output
	SDI	PCS0 IFS	ST	—	SPI serial data input
	SDA	PCS0 IFS	ST	NMOS	I^2C data line
	RX/TX	PCS0 IFS	ST	CMOS	UART serial data input in full-duplex communication or UART serial data input/output in single wire mode communication
PC4/SCOM1/SDO/TX	PC4	PCPU PCS1	ST	CMOS	General purpose I/O. Register enabled pull-high
	SCOM1	PCS1	—	AN	Software controlled LCD common output
	SDO	PCS1	—	CMOS	SPI serial data output
	TX	PCS1	—	CMOS	UART serial data output
PC5/SCOM2/$\overline{SCS}$	PC5	PCPU PCS1	ST	CMOS	General purpose I/O. Register enabled pull-high
	SCOM2	PCS1	—	AN	Software controlled LCD common output
	$\overline{SCS}$	PCS1 IFS	ST	CMOS	SPI slave select
PC6/SCOM3/SCK/SCL	PC6	PCPU PCS1	ST	CMOS	General purpose I/O. Register enabled pull-high
	SCOM3	PCS1	—	AN	Software controlled LCD common output
	SCK	PCS1 IFS	ST	CMOS	SPI serial clock
	SCL	PCS1 IFS	ST	NMOS	I^2C clock line
PC7/STP0B/SCK/SCL	PC7	PCPU PCS1	ST	CMOS	General purpose I/O. Register enabled pull-high
	STP0B	PCS1	—	CMOS	STM0 inverted output
	SCK	PCS1 IFS	ST	CMOS	SPI serial clock
	SCL	PCS1 IFS	ST	NMOS	I^2C clock line
PD0/INT3	PD0	PDPU	ST	CMOS	General purpose I/O. Register enabled pull-high
	INT3	INTEG INTC3	ST	—	External interrupt
PD1	PD1	PDPU	ST	CMOS	General purpose I/O. Register enabled pull-high
PD2	PD2	PDPU	ST	CMOS	General purpose I/O. Register enabled pull-high
OPA0N	OPA0N	—	AN	—	Operational amplifier 0 negative input
OPA1N	OPA1N	—	AN	—	Operational amplifier 1 negative input
OPAE	OPAE	—	—	AN	Operational amplifier output
VDD	VDD	—	PWR	—	Digital positive power supply
VSS	VSS	—	PWR	—	Digital negative power supply

Legend: I/T: Input type
OPT: Optional by register option
CMOS: CMOS output
AN: Analog signal
O/T: Output type
ST: Schmitt Trigger input
NMOS: NMOS output
PWR: Power

Absolute Maximum Ratings

Supply Voltage ..... V_{SS}-0.3V to 6.0V

Input Voltage ..... V_{SS}-0.3V to V_{DD}+0.3V

Storage Temperature ..... -60°C~150°C

Operating Temperature ..... -40°C to 85°C

I_{OH} Total ..... -80mA

I_{OL} Total 80mA

Total Power Dissipation 500mW

Note: These are stress ratings only. Stresses exceeding the range specified under "Absolute Maximum Ratings" may cause substantial damage to the device. Functional operation of the device at other conditions beyond those listed in the specification is not implied and prolonged exposure to extreme conditions may affect device reliability.

D.C. Characteristics

For data in the following tables, note that factors such as oscillator type, operating voltage, operating frequency, pin load conditions, temperature and program instruction type, etc., can all exert an influence on the measured values.

Operating Voltage Characteristics

Ta=-40°C~85°C

Symbol	Parameter	Test Conditions	Min.	Typ.	Max.	Unit
V_{DD}	Operating Voltage – HIRC	f_{SYS}=8MHz	2.2	—	5.5	V
	Operating Voltage – LIRC	f_{SYS}=32kHz	2.2	—	5.5	V

Operating Current Characteristics

Ta=-40°C~85°C

Symbol	Operating Mode	Test Conditions		Min.	Typ.	Max.	Unit
		V_{DD}	Conditions				
I_{DD}	SLOW Mode – LIRC	2.2V	f_{SYS}=32kHz, OPA0/1 always enable, PGA always enable, Bandgap always enable	—	1200	1600	μA
		3V		—	1300	1800	
		5V		—	1600	2200	
	FAST Mode – HIRC	2.2V	f_{SYS}=8MHz, OPA0/1 always enable, PGA always enable, Bandgap always enable	—	1.6	2.0	mA
		3V		—	2.1	3.0	
		5V		—	3.2	4.6	

Note: When using the characteristic table data, the following notes should be taken into consideration:

1. Any digital inputs are setup in a non floating condition.
2. All measurements are taken under conditions of no load and with all peripherals in an off state.
3. There are no DC current paths.
4. All Operating Current values are measured using a continuous NOP instruction program loop.

Standby Current Characteristics

Ta=25°C, unless otherwise specified

Symbol	Standby Mode	Test Conditions		Min.	Typ.	Max.	Max. @85°C	Unit
		V_{DD}	Conditions					
I_{STB}	SLEEP Mode	2.2V	WDT off, OPA0/1 always enable, PGA always enable, Bandgap always enable	—	1.6	1.8	2.0	mA
		3V		—	1.7	1.9	2.1	
		5V		—	1.8	2.0	2.2	
	IDLE0 Mode – LIRC	2.2V	f_{SUB} on, OPA0/1 always enable, PGA always enable, Bandgap always enable	—	1.6	1.8	2.0	
		3V		—	1.7	1.9	2.1	
		5V		—	1.8	2.0	2.2	
	IDLE1 Mode – HIRC	2.2V	f_{SUB} on, f_{SYS}=8MHz, OPA0/1 always enable, PGA always enable, Bandgap always enable	—	2.2	2.4	2.6	
		3V		—	2.4	2.6	2.8	
		5V		—	2.6	2.8	3.0	

Note: When using the characteristic table data, the following notes should be taken into consideration:

1. Any digital inputs are setup in a non floating condition.
2. All measurements are taken under conditions of no load and with all peripherals in an off state.
3. There are no DC current paths.
4. All Standby Current values are taken after a HALT instruction execution thus stopping all instruction execution.

A.C. Characteristics

For data in the following tables, note that factors such as oscillator type, operating voltage, operating frequency and temperature etc., can all exert an influence on the measured values.

Internal High Speed Oscillator – HIRC – Frequency Accuracy

During the program writing operation the writer will trim the HIRC oscillator at a user selected HIRC frequency and user selected voltage of either 3V or 5V.

Symbol	Parameter	Test Conditions		Min.	Typ.	Max.	Unit
		V_{DD}	Temp.				
f_{HIRC}	8MHz Writer Trimmed HIRC Frequency	3V/5V	25°C	-1%	8	+1%	MHz
			-40°C~85°C	-2%	8	+2%	
		2.2V~5.5V	25°C	-2.5%	8	+2.5%	
			-40°C~85°C	-3%	8	+3%	

Note: 1. The 3V/5V values for V_{DD} are provided as these are the two selectable fixed voltages at which the HIRC frequency is trimmed by the writer.

2. The row below the 3V/5V trim voltage row is provided to show the values for the full V_{DD} range operating voltage. It is recommended that the trim voltage is fixed at 3V for application voltage ranges from 2.2V to 3.6V and fixed at 5V for application voltage ranges from 3.3V to 5.5V.

Internal Low Speed Oscillator Characteristics – LIRC

Symbol	Parameter	Test Conditions		Min.	Typ.	Max.	Unit
		V_{DD}	Temp.				
f_{LIRC}	LIRC Frequency	2.2V~5.5V	25°C	-10%	32	+10%	kHz
			-40°C~85°C	-50%	32	+60%	
t_{START}	LIRC Start Up Time	—	-40°C~85°C	—	—	500	μs

Operating Frequency Characteristic Curves

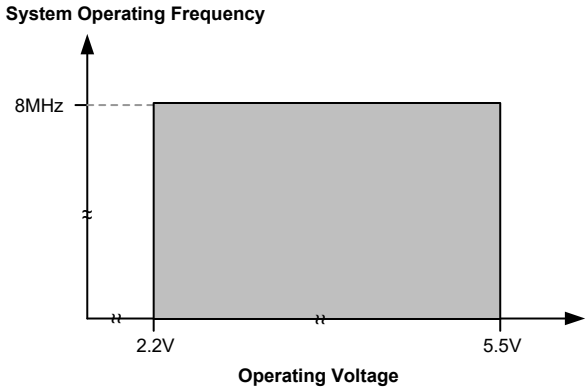

System Start Up Time Characteristics

Ta=-40°C~85°C

Symbol	Parameter	Test Conditions		Min.	Typ.	Max.	Unit
		V_{DD}	Conditions				
t_{SST}	System Start-up Time (Wake-up from Conditions where f_{SYS} is off)	—	$f_{SYS}=f_H\sim f_H/64$, $f_H=f_{HIRC}$	—	16	—	t_{HIRC}
			$f_{SYS}=f_{SUB}=f_{LIRC}$	—	2	—	t_{LIRC}
	System Start-up Time (Wake-up from Conditions where f_{SYS} is on)	—	$f_{SYS}=f_H\sim f_H/64$, $f_H=f_{HIRC}$	—	2	—	t_H
			$f_{SYS}=f_{SUB}=f_{LIRC}$	—	2	—	t_{SUB}
	System Speed Switch Time (FAST to Slow Mode or SLOW to FAST Mode)	—	f_{HIRC} switches from off → on	—	16	—	t_{HIRC}
t_{RSTD}	System Reset Delay Time (Reset Source from Power-on Reset or LVR Hardware Reset) Note: The fast power on mode is enabled.	—	RR_{POR}=5V/ms (Start the time when the V_{DD} reaches the minimum operating voltage and the reset pin is high)	0.6	0.8	1.0	ms
	System Reset Delay Time (LVRC/WDTC/RSTC Software Reset) Note: The fast power on mode is enabled.	—	—				
	System Reset Delay Time (Reset Source from WDT Overflow or $\overline{RES}$ Pin Reset) Note: The fast power on mode is enabled.	—	—				
	System Reset Delay Time (Reset Source from Power-on Reset or LVR Hardware Reset) Note: The fast power on mode is disabled.	—	RR_{POR}=5V/ms	14	16	18	ms
	System Reset Delay Time (LVRC/WDTC/ RSTC Software Reset) Note: The fast power on mode is disabled.	—	—				
	System Reset Delay Time (Reset Source from WDT Overflow or $\overline{RES}$ Pin Reset) Note: The fast power on mode is disabled.	—	—				
t_{SRESET}	Minimum Software Reset Width to Reset	—	—	45	90	120	μs

Note: 1. For the System Start-up time values, whether f_{SYS} is on or off depends upon the mode type and the chosen f_{SYS} system oscillator. Details are provided in the System Operating Modes section.

2. The time units, shown by the symbols t_{HIRC} etc. are the inverse of the corresponding frequency values as provided in the frequency tables. For example, $t_{HIRC}=1/f_{HIRC}$, $t_{SYS}=1/f_{SYS}$ etc.

3. If the LIRC is used as the system clock and if it is off when in the SLEEP Mode, then an additional LIRC start up time, t_{START}, as provided in the LIRC frequency table, must be added to the t_{SST} time in the table above.

4. The System Speed Switch Time is effectively the time taken for the newly activated oscillator to start up.

Input/Output Characteristics

Input/Output (without Multi-power) D.C. Characteristics

For PA0~PA7, PB0~PB5, PB7, PC2 and PD0~PD2 pins.

Ta=-40°C~85°C

Symbol	Parameter	Test Conditions		Min.	Typ.	Max.	Unit
		V_{DD}	Conditions				
V_{IL}	Input Low Voltage for I/O Ports	5V	—	0	—	1.5	V
		—	—	0	—	$0.2V_{DD}$	
	Input Low Voltage for $\overline{RES}$ Pin	5V	—	0	—	2.0	V
		—	V_{DD}≥2.7V	0	—	$0.4V_{DD}$	
		—	2.2V≤V_{DD}<2.7V	0	—	$0.3V_{DD}$	
V_{IH}	Input High Voltage for I/O Ports	5V	—	3.5	—	5.0	V
		—	—	$0.8V_{DD}$	—	V_{DD}	
	Input High Voltage for $\overline{RES}$ Pin	5V	—	4.5	—	5.0	V
		—	—	$0.9V_{DD}$	—	V_{DD}	
I_{OL}	Sink Current for I/O Ports	3V	V_{OL}=$0.1V_{DD}$	16	32	—	mA
		5V		32	65	—	
I_{OH}	Source Current for I/O Ports	3V	V_{OH}=$0.9V_{DD}$	-4	-8	—	mA
		5V		-8	-16	—	
R_{PH}	Pull-high Resistance for I/O Ports Except PA2 (1)	3V	—	20	60	100	kΩ
		5V	—	10	30	50	
	Pull-high Resistance for Reset Pin	3V	—	6.67	15	23	kΩ
		5V	—	3.5	7.5	12	
I_{LEAK}	Input Leakage Current for I/O Ports	5V	V_{IN}=V_{DD} or V_{IN}=V_{SS}	—	—	±1	μA
t_{INT}	External Interrupt Minimum Pulse Width	—	—	10	—	—	μs
t_{RES}	External Reset Pin Minimum Pulse Width	—	—	10	—	—	μs
t_{TPI}	TM Input Pin Minimum Pulse Width	—	—	0.3	—	—	μs
t_{TCK}	STPnI Input Pin Minimum Pulse Width	—	—	0.3	—	—	μs
f_{TMCLK}	STMn Maximum Timer Clock Source Frequency	5V	—	—	—	1	f_{SYS}
t_{CPW}	STMn Minimum Capture Pulse Width	—	—	t_{CPW}(2)	—	—	μs

Note: 1. The R_{PH} internal pull-high resistance value is calculated by connecting to ground and enabling input pin with a pull-high resistor and then measuring the pin current at the specified supply voltage level. Dividing the voltage by this measured current provides the R_{PH} value.

2. t_{TMCLK}=1/f_{TMCLK}.
t_{CPW}=max(2×t_{TMCLK}, t_{TPI})
Ex1: If f_{TMCLK}=8MHz, t_{TPI}=0.3μs, then t_{CPW}=max(0.25μs, 0.3μs)=0.3μs
Ex2: If f_{TMCLK}=4MHz, t_{TPI}=0.3μs, then t_{CPW}=max(0.5μs, 0.3μs)=0.5μs

Input/Output (with Multi-power) D.C. Characteristics

For PB6, PC0~PC1 and PC3~PC7 pins.

Ta=-40°C~85°C

Symbol	Parameter	Test Conditions		Min.	Typ.	Max.	Unit
		V_{DD}	Conditions				
V_{DD}	Power Supply – V_{DD0}	—	—	2.2	5.0	5.5	V
V_{DDIO}	Power Supply – V_{DD1}	—	—	2.2	—	V_{DD}	V
V_{IL}	Input Low Voltage for I/O Ports	5V	Pin power=V_{DDn}, V_{DDn}=V_{DD}, n=0~1	0	—	1.5	V
		—	Pin power=V_{DDn}, n=0~1	0	—	0.2V_{DDn}	
V_{IH}	Input High Voltage for I/O Ports	5V	Pin power=V_{DDn}, V_{DDn}=V_{DD}, n=0~1	3.5	—	5.0	V
		—	Pin power=V_{DDn}, n=0~1	0.8V_{DDn}	—	V_{DDn}	
I_{OL}	Sink Current for I/O Ports	3V	V_{OL}=0.1V_{DDn}, V_{DDn}=V_{DD}, n=0~1	16	32	—	mA
		5V	V_{OL}=0.1V_{DDn}, V_{DDn}=V_{DD}, n=0~1	32	65	—	
			V_{OL}=0.1V_{DDn}, V_{DDn}=3V, n=0~1	20	40	—	
I_{OH}	Source Current for I/O Ports	3V	V_{OH}=0.9V_{DDn}, V_{DDn}=V_{DD}, n=0~1	-4	-8	—	mA
		5V	V_{OH}=0.9V_{DDn}, V_{DDn}=V_{DD}, n=0~1	-8	-16	—	
			V_{OH}=0.9V_{DDn}, V_{DDn}=3V, n=0~1	-2.5	-5.0	—	
R_{PH}	Pull-high Resistance for I/O Ports(1)	3V	V_{DDn}=V_{DD}, n=0~1	20	60	100	kΩ
		5V	V_{DDn}=V_{DD}, n=0~1	10	30	50	
			V_{DDn}=3V, n=0~1	36	110	180	
I_{LEAK}	Input Leakage Current for I/O Ports	5V	V_{IN}=V_{SS} or V_{IN}=V_{DDn}, n=0~1	—	—	±1	μA

Note: 1. The R_{PH} internal pull-high resistance value is calculated by connecting to ground and enabling input pin with a pull-high resistor and then measuring the pin current at the specified supply voltage level. Dividing the voltage by this measured current provides the R_{PH} value.

2. The actual V_{DDn} in the "Conditions" column, which can be V_{DD} or V_{DDIO}, is determined by the "V_{DD}" column value and the individual VDDn voltage range.

Memory Characteristics

Ta=-40°C~85°C, unless otherwise specified

Symbol	Parameter	Test Conditions		Min.	Typ.	Max.	Unit
		V_{DD}	Conditions				
Flash Program Memory							
V_{DD}	V_{DD} for Read	—	—	2.2	—	5.5	V
	V_{DD} for Erase/Write	—	—	2.2	—	5.5	V
t_{FER}	IAP Erase Time	—	FWERTS=0	—	3.2	4.9	ms
		—	FWERTS=1	—	3.7	5.6	
t_{FWR}	IAP Write Time	—	FWERTS=0	—	2.2	3.5	ms
		—	FWERTS=1	—	3.0	4.6	
I_{DDPGM}	Programming/Erase Current on V_{DD}	—	—	—	—	5.0	mA
E_P	Cell Endurance	—	—	100K	—	—	E/W
t_{RETD}	ROM Data Retention Time	—	Ta=25°C	—	40	—	Year
t_{ACTV}	ROM Activation Time – Wake-up from IDLE/SLEEP Mode	—	—	32	—	64	μs
Data EEPROM Memory							
V_{DD}	V_{DD} for Read/Write	—	—	2.2	—	5.5	V
t_{EERD}	EEPROM Read Time	—	—	—	—	4	t_{SYS}

Symbol	Parameter	Test Conditions		Min.	Typ.	Max.	Unit
		V_{DD}	Conditions				
t_{EEER}	EEPROM Erase Time	—	EWERTS=0	—	3.2	4.7	ms
		—	EWERTS=1	—	3.7	5.4	
t_{EEWR}	EEPROM Write Time (Byte Mode)	—	EWERTS=0	—	5.4	9.0	ms
		—	EWERTS=1	—	6.7	10.0	
	EEPROM Write Time (Page Mode)	—	EWERTS=0	—	2.2	4.5	
		—	EWERTS=1	—	3.0	5.5	
E_P	Cell Endurance	—	—	100K	—	—	E/W
t_{RETD}	Data Retention Time	—	Ta=25°C	—	40	—	Year
RAM Data Memory							
V_{DR}	RAM Data Retention Voltage	—	—	2.2	—	—	V

Note: 1. "E/W" means Erase/Write times.
2. The ROM activation time t_{ACTV} should be added when calculating the total system start-up time of a wake-up from the IDLE/SLEEP mode.

Software Controlled LCD Driver Electrical Characteristics

Ta=-40°C~85°C

Symbol	Parameter	Test Conditions		Min.	Typ.	Max.	Unit
		V_{DD}	Conditions				
I_{BIAS}	Bias Current	3V	ISEL[1:0]=00B	10.5	15.0	22.5	μA
		5V		17.5	25.0	34.5	
		3V	ISEL[1:0]=01B	21	30	39	
		5V		35	50	65	
		3V	ISEL[1:0]=10B	42	60	78	
		5V		70	100	130	
		3V	ISEL[1:0]=11B	82.6	118.0	153.4	
		5V		140	200	260	
V_{SCOM}	V_{DD}×1/2 Voltage for LCD SCOM Output	2.2V~5.5V	No load	0.475V_{DD}	0.500V_{DD}	0.525V_{DD}	V

LVR Electrical Characteristics

Ta=-40°C~85°C

Symbol	Parameter	Test Conditions		Min.	Typ.	Max.	Unit
		V_{DD}	Conditions				
V_{DD}	Operating Voltage	—	—	2.2	—	5.5	V
V_{LVR}	Low Voltage Reset Voltage	—	LVR enable, voltage select 2.1V	-3%	2.1	+3%	V
I_{LVROP}	LVR Operating Current	3V	LVR enable, V_{LVR}=2.1V	—	—	10	μA
		5V		—	10	15	
t_{LVR}	Minimum Low Voltage Width to Reset	—	TLVR[1:0]=00B	120	240	480	μs
			TLVR[1:0]=01B	0.5	1.0	2.0	ms
			TLVR[1:0]=10B	1	2	4	
			TLVR[1:0]=11B	2	4	8	
I_{LVR}	Additional Current for LVR Enable	5V	—	—	—	14	μA

A/D Converter Electrical Characteristics

Ta=-40°C~85°C

Symbol	Parameter	Test Conditions		Min.	Typ.	Max.	Unit
		V_{DD}	Conditions				
V_{DD}	A/D Converter Operating Voltage	—	—	2.2	—	5.5	V
V_{ADI}	A/D Converter Input Voltage	—	—	0	—	V_{REF}	V
V_{REF}	A/D Converter Reference Voltage	—	—	2.2	—	V_{DD}	V
N_R	A/D Converter Resolution	—	—	—	—	12	Bit
DNL	A/D Converter Differential Non-linearity	5V	SAINS[3:0]=0000B, SAVRS[1:0]=01B, V_{REF}=V_{DD}, t_{ADCK}=0.5μs	-3	—	3	LSB
			SAINS[3:0]=0000B, SAVRS[1:0]=01B, V_{REF}=V_{DD}, t_{ADCK}=10μs				
INL	A/D Converter Integral Non-linearity	5V	SAINS[3:0]=0000B, SAVRS[1:0]=01B, V_{REF}=V_{DD}, t_{ADCK}=0.5μs	-4	—	4	LSB
			SAINS[3:0]=0000B, SAVRS[1:0]=01B, V_{REF}=V_{DD}, t_{ADCK}=10μs				
I_{ADC}	Additional Current for A/D Converter Enable	5V	No load, t_{ADCK}=0.5μs	—	850	1000	μA
t_{ADCK}	A/D Converter Clock Period	—	4.2V≤V_{DD}≤5.5V	0.5	—	10.0	μs
t_{ON2ST}	A/D Converter On-to-Start Time	—	—	4	—	—	μs
t_{ADS}	A/D Sampling Time	—	—	—	4	—	t_{ADCK}
t_{ADC}	A/D Conversion Time (Including A/D Sample and Hold Time)	—	—	—	16	—	t_{ADCK}
GERR	A/D Conversion Gain Error	5V	SAINS[3:0]=0000B, SAVRS[1:0]=01B, V_{REF}=V_{DD}	-4	—	4	LSB
OSRR	A/D Conversion Offset Error	5V	SAINS[3:0]=0000B, SAVRS[1:0]=01B, V_{REF}=V_{DD}	-4	—	4	LSB
I_{PGA}	Additional Current for PGA Enable	5V	No load	—	900	1800	μA
V_{OR}	PGA Maximum Output Voltage Range	5V	—	V_{SS} +0.1	—	V_{DD} -0.1	V
V_{VR}	Fix Voltage Output of PGA	—	V_{DD}=4.2V~5.5V V_{RI}=V_{BGREF}	-1%	4	+1%	V
V_{OS_PGA}	PGA Input Offset Voltage	5V	—	-15	—	+15	mV

Reference Voltage Characteristics

Ta=-40°C~85°C, unless otherwise specified

Symbol	Parameter	Test Conditions		Min.	Typ.	Max.	Unit
		V_{DD}	Conditions				
V_{DD}	Operating Voltage	—	—	2.2	–	5.5	V
V_{BGREF}	Bandgap Reference Voltage	2.2V~5.5V	—	-1%	1.2	+1%	V
I_{BGREF}	Operating Current	5.5V	—	—	25	35	μA
PSRR	Power Supply Rejection Ratio	—	Ta=25°C, V_{RIPPLE}=1V_{P-P}, f_{RIPPLE}=100Hz	75	—	—	dB
En	Output Noise	—	Ta=25°C, no load current, f=0.1Hz~10Hz	—	300	—	μV_{RMS}
t_{START}	Startup Time	2.2V~5.5V	Ta=25°C	—	—	400	μs

Note: The V_{BGREF} voltage is used as the A/D converter PGA input.

Operational Amplifier Electrical Characteristics

Ta=-40°C~85°C, unless otherwise specified

Symbol	Parameter	Test Conditions		Min.	Typ.	Max.	Unit
		V_{DD}	Conditions				
I_{OPA}	Additional Current for OPA	5V	No load	—	300	600	μA
I_{PGA}	OPA2 PGA Current	5V	Gain=20/40	—	320	630	μA
V_{OS}	Input Offset Voltage	5V	Ta=25°C, OPA0/1 without calibration	-7	5	7	mV
			OPA2 without calibration (OOF [5:0]=100000B)	-15	—	15	
			OPA2 with calibration	-2	—	2	
V_{CM}	Common Mode Voltage Range	5V	—	V_{SS}	—	V_{DD} -1.4	V
I_{SC}	Output Short Circuit Current	5V	RLOAD=5.1Ω	±10	±20	—	mA
Ga	OPA2 PGA Gain Accuracy	5V	Relative gain	-5	—	5	%

14-bit D/A Converter Electrical Characteristics

Ta=-40°C~85°C

Symbol	Parameter	Test Conditions		Min.	Typ.	Max.	Unit
		V_{DD}	Conditions				
V_{DACO}	Output Voltage Range	—	—	V_{SS}	—	DAVREF	V
DAVREF	Reference Voltage	—	—	2	—	V_{DD}	V
I_{DAC}	Additional Current for DAC Enable	5V	—	—	600	800	μA
t_{ST}	Settling Time	5V	C_{LOAD}=50pF	—	—	5	μs
DNL	Differential Non-linearity	5V	V_{REF}=V_{DD}, DA[13:0]=0000h~1fffh(Note)	—	±4	±8	LSB
			V_{REF}=V_{DD}, DA[13:0]=2000h~3fffh(Note)	—	±4	±15	LSB
			V_{REF}=V_{RO}, full range	—	—	±16	LSB
INL	Integral Non-linearity	5V	V_{REF}=V_{DD}, DA[13:0]=0000h~1fffh(Note)	—	±5	±12	LSB
			V_{REF}=V_{DD}, DA[13:0]=2000h~3fffh(Note)	—	±5	±17	LSB
			V_{REF}=V_{RO}, full range	—	—	±18	LSB
Ro	D/A Converter 0/1 R2R Output Resistor	5V	—	—	13	—	kΩ

Note: Keeping 1LSB=$V_{REF}/2^{14}$ unchanged, consider the interval code as a new 14-bit DAC to calculate the DNL/INL.

I²C Electrical Characteristics

Ta=25°C

Symbol	Parameter	Test Conditions		Min.	Typ.	Max.	Unit
		V_{DD}	Conditions				
f_{I2C}	I²C Standard Mode (100kHz) f_{SYS} Frequency (Note)	—	No clock debounce	2	—	—	MHz
			2 system clock debounce	4	—	—	
			4 system clock debounce	4	—	—	
	I²C Fast Mode (400kHz) f_{SYS} Frequency (Note)	—	No clock debounce	4	—	—	MHz
			2 system clock debounce	8	—	—	
			4 system clock debounce	8	—	—	
f_{SCL}	SCL Clock Frequency	3V/5V	Standard mode	—	—	100	kHz
			Fast mode	—	—	400	
$t_{SCL(H)}$	SCL Clock High Time	3V/5V	Standard mode	3.5	—	—	μs
			Fast mode	0.9	—	—	
$t_{SCL(L)}$	SCL Clock Low Time	3V/5V	Standard mode	3.5	—	—	μs
			Fast mode	0.9	—	—	
t_{FALL}	SCL and SDA Fall Time	3V/5V	Standard mode	—	—	1.3	μs
			Fast mode	—	—	0.34	
t_{RISE}	SCL and SDA Rise Time	3V/5V	Standard mode	—	—	1.3	μs
			Fast mode	—	—	0.34	
$t_{SU(SDA)}$	SDA Data Setup Time	3V/5V	Standard mode	0.25	—	—	μs
			Fast mode	0.1	—	—	
$t_{H(SDA)}$	SDA Data Hold Time	3V/5V	—	0.1	—	—	μs
$t_{VD(SDA)}$	SDA Data Valid Time	3V/5V	—	—	—	0.6	μs
$t_{SU(STA)}$	Start Condition Setup Time	3V/5V	Standard mode	3.5	—	—	μs
			Fast mode	0.6	—	—	
$t_{H(STA)}$	Start Condition Hold Time	3V/5V	—	0.6	—	—	μs
$t_{SU(STO)}$	Stop Condition Setup Time	3V/5V	Standard mode	3.5	—	—	μs
			Fast mode	0.6	—	—	

Note: Using the debounce function can make the transmission more stable and reduce the probability of communication failure due to interference.

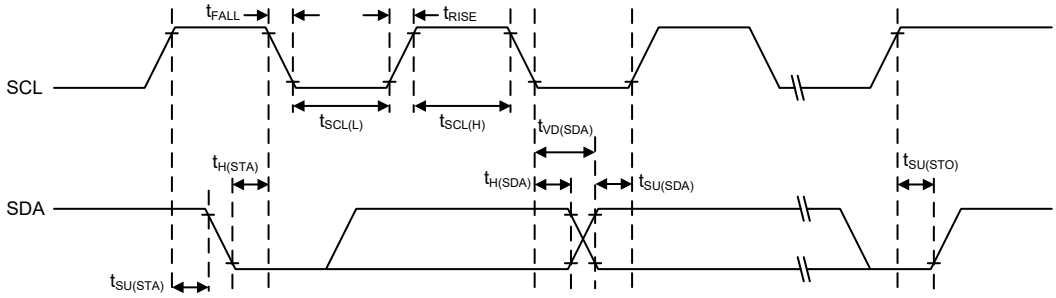

I²C Timing Diagram

Power-on Reset Characteristics

Ta=-40°C~85°C

Symbol	Parameter	Test Conditions		Min.	Typ.	Max.	Unit
		V_{DD}	Conditions				
V_{POR}	V_{DD} Start Voltage to Ensure Power-on Reset	—	—	—	—	100	mV
RR_{POR}	V_{DD} Rising Rate to Ensure Power-on Reset	—	—	0.035	—	—	V/ms
t_{POR}	Minimum Time for V_{DD} Stays at V_{POR} to Ensure Power-on Reset	—	—	1	—	—	ms

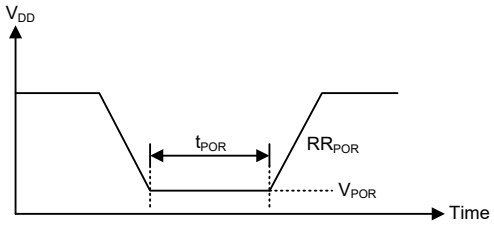

System Architecture

A key factor in the high-performance features of the Holtek range of microcontrollers is attributed to their internal system architecture. The device takes advantage of the usual features found within RISC microcontrollers providing increased speed of operation and enhanced performance. The pipelining scheme is implemented in such a way that instruction fetching and instruction execution are overlapped, hence instructions are effectively executed in one or two cycles for most of the standard or extended instructions respectively. The exceptions to these are branch or call instructions which need one more cycle. An 8-bit wide ALU is used in practically all instruction set operations, which carries out arithmetic operations, logic operations, rotation, increment, decrement, branch decisions, etc. The internal data path is simplified by moving data through the Accumulator and the ALU. Certain internal registers are implemented in the Data Memory and can be directly or indirectly addressed. The simple addressing methods of these registers along with additional architectural features ensure that a minimum of external components is required to provide a functional I/O and A/D control system with maximum reliability and flexibility. This makes the device suitable for low-cost, high-volume production for controller applications.

Clocking and Pipelining

The main system clock, derived from either an HIRC or LIRC oscillator is subdivided into four internally generated non-overlapping clocks, T1~T4. The Program Counter is incremented at the beginning of the T1 clock during which time a new instruction is fetched. The remaining T2~T4 clocks carry out the decoding and execution functions. In this way, one T1~T4 clock cycle forms one instruction cycle. Although the fetching and execution of instructions takes place in consecutive instruction cycles, the pipelining structure of the microcontroller ensures that instructions are effectively executed in one instruction cycle. The exception to this are instructions where the contents of the Program Counter are changed, such as subroutine calls or jumps, in which case the instruction will take one more instruction cycle to execute.

For instructions involving branches, such as jump or call instructions, two machine cycles are required to complete instruction execution. An extra cycle is required as the program takes one cycle to first obtain the actual jump or call address and then another cycle to actually execute the branch. The requirement for this extra cycle should be taken into account by programmers in timing sensitive applications.

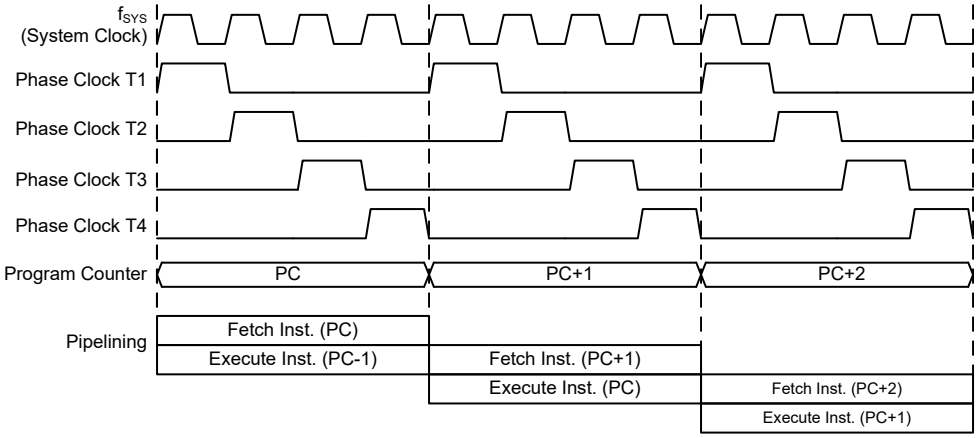

System Clocking and Pipelining

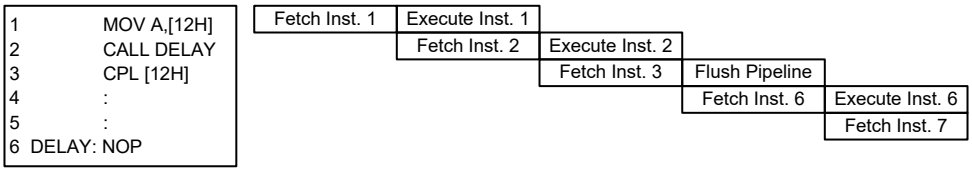

Instruction Fetching

Program Counter

During program execution, the Program Counter is used to keep track of the address of the next instruction to be executed. It is automatically incremented by one each time an instruction is executed except for instructions, such as "JMP" or "CALL" that demand a jump to a non-consecutive Program Memory address. Only the lower 8 bits, known as the Program Counter Low Register, are directly addressable by the application program.

When executing instructions requiring jumps to non-consecutive addresses such as a jump instruction, a subroutine call, interrupt or reset, etc., the microcontroller manages program control by loading the required address into the Program Counter. For conditional skip instructions, once the condition has been met, the next instruction, which has already been fetched during the present instruction execution, is discarded and a dummy cycle takes its place while the correct instruction is obtained.

Program Counter	
High Byte	**Low Byte (PCL)**
PC12~PC8	PCL7~PCL0

Program Counter

The lower byte of the Program Counter, known as the Program Counter Low register or PCL, is available for program control and is a readable and writeable register. By transferring data directly into this register, a short program jump can be executed directly; however, as only this low byte is available for manipulation, the jumps are limited to the present page of memory that is 256 locations. When such program jumps are executed it should also be noted that a dummy cycle will be inserted. Manipulating the PCL register may cause program branching, so an extra cycle is needed to pre-fetch.

Program Counter Read Register

The Program Counter read registers are a read only register pair for reading the program counter value which indicates the current program execution address. Read the low byte register first then the high byte register. Reading the low byte register, PCRL, will read the low byte data of the current program execution address, and place the high byte data of the program counter into the 8-bit PCRH buffer. Then reading the PCRH register will read the corresponding data from the 8-bit PCRH buffer.

The following example shows how to read the current program execution address. When the current program execution address is 123H, the steps to execute the instructions are as follows:

(1) MOV A, PCRL → the ACC value is 23H, and the PCRH value is 01H;

MOV A, PCRH → the ACC value is 01H.

(2) LMOV A, PCRL → the ACC value is 23H, and the PCRH value is 01H;

LMOV A, PCRH → the ACC value is 01H.

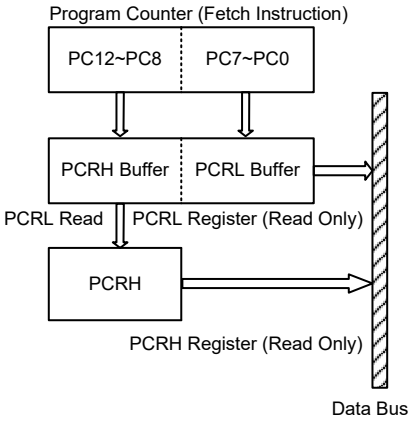

• PCRL Register

Bit	7	6	5	4	3	2	1	0
Name	D7	D6	D5	D4	D3	D2	D1	D0
R/W	R	R	R	R	R	R	R	R
POR	0	0	0	0	0	0	0	0

Bit 7~0 **D7~D0**: Program Counter Read low byte register bit 7 ~ bit 0

• PCRH Register

Bit	7	6	5	4	3	2	1	0
Name	—	—	—	D12	D11	D10	D9	D8
R/W	—	—	—	R	R	R	R	R
POR	—	—	—	0	0	0	0	0

Bit 7~5 Unimplemented, read as “0”

Bit 4~0 **D12~D8**: Program Counter Read high byte register bit 4 ~ bit 0

Stack

This is a special part of the memory which is used to save the contents of the Program Counter only. The stack is organized into 8 levels and is neither part of the data nor part of the program space, and is neither readable nor writeable. The activated level is indexed by the Stack Pointer, STKPTR[3:0]. At a subroutine call or interrupt acknowledge signal, the contents of the Program Counter are pushed onto the stack. At the end of a subroutine or an interrupt routine, signaled by a return instruction,

RET or RETI, the Program Counter is restored to its previous value from the stack. After a device reset, the Stack Pointer will point to the top of the stack.

If the stack is full and an enabled interrupt takes place, the interrupt request flag will be recorded but the acknowledge signal will be inhibited. When the Stack Pointer is decremented, by RET or RETI, the interrupt will be serviced. This feature prevents stack overflow allowing the programmer to use the structure more easily. However, when the stack is full, a CALL subroutine instruction can still be executed which will result in a stack overflow. Precautions should be taken to avoid such cases which might cause unpredictable program branching.

If the stack is overflow, the first Program Counter save in the stack will be lost.

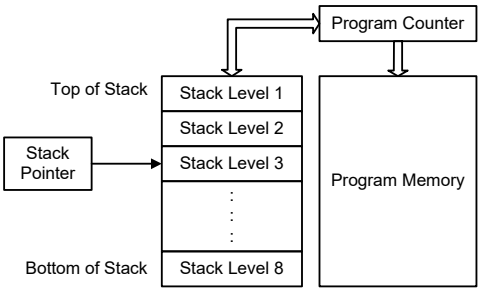

• **STKPTR Register**

Bit	7	6	5	4	3	2	1	0
Name	OSF	—	—	—	D3	D2	D1	D0
R/W	R/W	—	—	—	R	R	R	R
POR	0	—	—	—	0	0	0	0

Bit 7 **OSF**: Stack overflow flag
0: No stack overflow occurred
1: Stack overflow occurred
When the stack is full and a CALL instruction is executed or when the stack is empty and a RET instruction is executed, the OSF bit will be set high. The OSF bit is cleared only by software and cannot be reset automatically by hardware.

Bit 6~4 Unimplemented, read as "0"

Bit 3~0 **D3~D0**: Stack pointer register bit 3 ~ bit 0

The following example shows how the Stack Pointer and Stack Overflow Flag change when program branching conditions occur.

(1) When the CALL subroutine instruction is executed 9 times continuously and the RET instruction is not executed during the period, the corresponding changes of the STKPTR[3:0] and OSF bits are as follows:

CALL Execution Times	0	1	2	3	4	5	6	7	8	9
STKPTR[3:0] Bit Value	0	1	2	3	4	5	6	7	0	1
OSF Bit Value	0	0	0	0	0	0	0	0	0	1

(2) When the OSF bit is set high and not cleared, it will remain high no matter how many times the RET instruction is executed.

(3) When the stack is empty, the RET instruction is executed 8 times continuously, the corresponding changes of the STKPTR[3:0] and OSF bits are as follows:

RET Execution Times	0	1	2	3	4	5	6	7	8
STKPTR[3:0] Bit Value	0	7	6	5	4	3	2	1	0
OSF Bit Value	0	1	1	1	1	1	1	1	1

Arithmetic and Logic Unit – ALU

The arithmetic-logic unit or ALU is a critical area of the microcontroller that carries out arithmetic and logic operations of the instruction set. Connected to the main microcontroller data bus, the ALU receives related instruction codes and performs the required arithmetic or logical operations after which the result will be placed in the specified register. As these ALU calculation or operations may result in carry, borrow or other status changes, the status register will be correspondingly updated to reflect these changes. The ALU supports the following functions:

- Arithmetic operations:
  ADD, ADDM, ADC, ADCM, SUB, SUBM, SBC, SBCM, DAA,
  LADD, LADDM, LADC, LADCM, LSUB, LSUBM, LSBC, LSBCM, LDAA
- Logic operations:
  AND, OR, XOR, ANDM, ORM, XORM, CPL, CPLA,
  LAND, LOR, LXOR, LANDM, LORM, LXORM, LCPL, LCPLA
- Rotation:
  RRA, RR, RRCA, RRC, RLA, RL, RLCA, RLC,
  LRRA, LRR, LRRCA, LRRC, LRLA, LRL, LRLCA, LRLC
- Increment and Decrement:
  INCA, INC, DECA, DEC,
  LINCA, LINC, LDECA, LDEC
- Branch decision:
  JMP, SZ, SZA, SNZ, SIZ, SDZ, SIZA, SDZA, CALL, RET, RETI,
  LSZ, LSZA, LSNZ, LSIZ, LSDZ, LSIZA, LSDZA

Flash Program Memory

The Program Memory is the location where the user code or program is stored. For this device the Program Memory is Flash type, which means it can be programmed and re-programmed a large number of times, allowing the user the convenience of code modification on the same device. By using the appropriate programming tools, the Flash device offers users the flexibility to conveniently debug and develop their applications while also offering a means of field programming and updating.

Structure

The Program Memory has a capacity of 8K×16 bits. The Program Memory is addressed by the Program Counter and also contains data, table information and interrupt entries. Table data, which can be setup in any location within the Program Memory, is addressed by a separate table pointer registers.

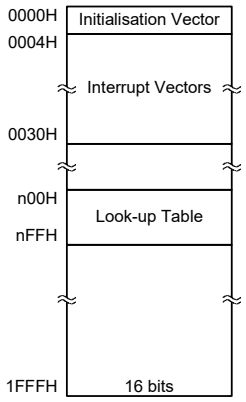

Program Memory Structure

Special Vectors

Within the Program Memory, certain locations are reserved for the reset and interrupts. The location 0000H is reserved for use by the device reset for program initialisation. After a device reset is initiated, the program will jump to this location and begin execution.

Look-up Table

Any location within the Program Memory can be defined as a look-up table where programmers can store fixed data. To use the look-up table, the table pointer must first be setup by placing the address of the look up data to be retrieved in the table pointer registers, TBLP and TBHP. These registers define the total address of the look-up table.

After setting up the table pointer, the table data can be retrieved from the Program Memory using the "TABRD [m]" or "TABRDL [m]" instructions respectively when the memory [m] is located in sector 0. If the memory [m] is located in other sectors except sector 0, the data can be retrieved from the program memory using the corresponding extended table read instruction such as "LTABRD [m]" or "LTABRDL [m]" respectively. When the instruction is executed, the lower order table byte from the Program Memory will be transferred to the user defined Data Memory register [m] as specified in the instruction. The higher order table data byte from the Program Memory will be transferred to the TBLH special register.

The accompanying diagram illustrates the addressing data flow of the look-up table.

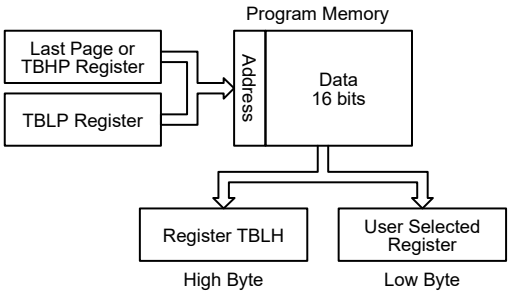

Table Program Example

The accompanying example shows how the table pointer and table data is defined and retrieved from the device. This example uses raw table data located in the last page which is stored there using the ORG statement. The value at this ORG statement is "1F00H" which refers to the start address of the last page within the 8K words Program Memory. The table pointer low byte register is setup here to have an initial value of "06H". This will ensure that the first data read from the data table will be at the Program Memory address "1F06H" or 6 locations after the start of the last page. Note that the value for the table pointer is referenced to the specific address pointed by TBHP and TBLP if the "TABRD [m]" or "LTABRD [m]" instruction is being used. The high byte of the table data which in this case is equal to zero will be transferred to the TBLH register automatically when the "TABRD [m]" or "LTABRD [m]" instruction is executed.

Because the TBLH register is a read/write register and can be restored, care should be taken to ensure its protection if both the main routine and Interrupt Service Routine use table read instructions. If using the table read instructions, the Interrupt Service Routines may change the value of the TBLH and subsequently cause errors if used again by the main routine. As a rule it is recommended that simultaneous use of the table read instructions should be avoided. However, in situations where simultaneous use cannot be avoided, the interrupts should be disabled prior to the execution of any main routine table-read instructions. Note that all table related instructions require two instruction cycles to complete their operation.

Table Read Program Example

```
tempreg1 db?       ; temporary register #1
tempreg2 db?       ; temporary register #2
:
:
mov a,06H          ; initialise table pointer - note that this address is referenced
mov tblp,a         ; to the last page or the page that tbhp pointed
mov a,1FH          ; initialise high table pointer
mov tbhp,a         ; it is not necessary to set tbhp if executing tabrdl or ltabrdl
:
:
tabrd tempreg1     ; transfers value in table referenced by table pointer data at
                   ; program memory address "1F06H" transferred to tempreg1 and TBLH
dec tblp           ; reduce value of table pointer by one
tabrd tempreg2     ; transfers value in table referenced by table pointer data at
                   ; program memory address "1F05H" transferred to tempreg2 and TBLH
                   ; in this example the data "1AH" is transferred to tempreg1 and
                   ; data "0FH" to tempreg2 the value "00H" will be
                   ; transferred to the high byte register TBLH
:
:
org 1F00H          ; sets initial address of last page
dc 00Ah,00Bh,00Ch,00Dh,00Eh,00Fh,01Ah,01Bh
```

In Circuit Programming – ICP

The provision of Flash type Program Memory provides the user with a means of convenient and easy upgrades and modifications to their programs on the same device.

As an additional convenience, Holtek has provided a means of programming the microcontroller in-circuit using a 4-pin interface. This provides manufacturers with the possibility of manufacturing their circuit boards complete with a programmed or un-programmed microcontroller, and then programming or upgrading the program at a later stage. This enables product manufacturers to easily keep their manufactured products supplied with the latest program releases without removal and re-insertion of the device.

The Flash MCU to Writer Programming Pin correspondence table is as follows:

Holtek Writer Pins	MCU Programming Pins	Pin Description
ICPDA	PA0	Programming Serial Data/Address
ICPCK	PA2	Programming Clock
VDD	VDD	Power Supply
VSS	VSS	Ground

The Program Memory can be programmed serially in-circuit using this 4-wire interface. Data is downloaded and uploaded serially on a single pin with an additional line for the clock. Two additional lines are required for the power supply. The technical details regarding the in-circuit programming of the device are beyond the scope of this document and will be supplied in supplementary literature.

During the programming process, the user must take care of the ICPDA and ICPCK pins for data and clock programming purposes to ensure that no other outputs are connected to these two pins.

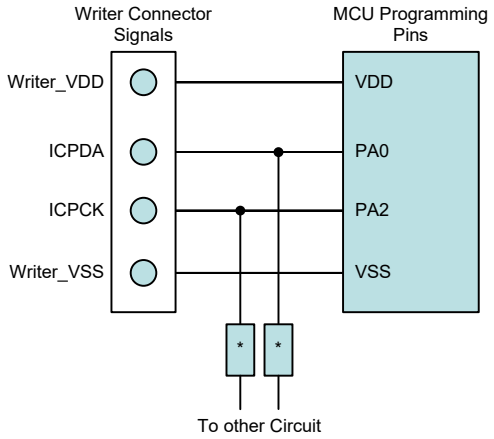

Note: * may be resistor or capacitor. The resistance of * must be greater than 1kΩ or the capacitance of * must be less than 1nF.

On-Chip Debug Support – OCDS

There is an EV chip named HT45V5Q-5 which is used to emulate the real MCU device named HT45F5Q-5. The EV chip device also provides the "On-Chip Debug" function to debug the real MCU device during the development process. The EV chip and the real MCU device are almost functionally compatible except for "On-Chip Debug" function. Users can use the EV chip device to emulate the real chip device behavior by connecting the OCDSDA and OCDSCK pins to the Holtek HT-IDE development tools. The OCDSDA pin is the OCDS Data/Address input/output pin while the OCDSCK pin is the OCDS clock input pin. When users use the EV chip device for debugging, the corresponding pin functions shared with the OCDSDA and OCDSCK pins will have no effect in the EV chip. However, the two OCDS pins which are pin-shared with the ICP programming pins are still used as the Flash Memory programming pins for ICP. For more detailed OCDS information, refer to the corresponding document named "Holtek e-Link for 8-bit MCU OCDS User's Guide".

Holtek e-Link Pins	EV Chip OCDS Pins	Pin Description
OCDSDA	OCDSDA	On-Chip Debug Support Data/Address input/output
OCDSCK	OCDSCK	On-Chip Debug Support Clock input
VDD	VDD	Power Supply
VSS	VSS	Ground

In Application Programming – IAP

Flash type Program Memory provides the user with a means of convenient and easy upgrades and modifications to their programs on the same device. The provision of the IAP function offers users the convenience of Flash Memory multi-programming features. The convenience of the IAP function is that it can execute the updated program procedure using its internal firmware, without requiring an external Program Writer or PC. In addition, the IAP interface can also be any type of communication protocol, such as UART, using I/O pins. Regarding the internal firmware, the user can select versions provided by Holtek or create their own. The following section illustrates the procedures regarding how to implement the IAP firmware.

Flash Memory Read/Write Size

The Flash memory Erase and Write operations are carried out in a page format while the Read operation is carried out in a word format. The page size and write buffer size are both assigned with a capacity of 32 words. Note that the Erase operation should be executed before the Write operation is executed.

When the Flash Memory Erase/Write Function is successfully enabled, the CFWEN bit will be set high. When the CFWEN bit is set high, the data can be written into the write buffer. The FWT bit is used to initiate the write process and then indicate the write operation status. This bit is set high by application program to initiate a write process and will be cleared by hardware if the write process is finished.

The Read operation can be carried out by executing a specific read procedure. The FRDEN bit is used to enable the read function and the FRD bit is used to initiate the read process by application programs and then indicate the read operation status. When the read process is finished, this bit will be cleared by hardware.

Operations	Format
Erase	32 words/time
Write	32 words/time
Read	1 word/time
Note: Page size=Write buffer size=32 words.	

IAP Operation Format

Page	FARH	FARL[7:5]	FARL[4:0]
0	0000 0000	000	Tag Address
1	0000 0000	001	
2	0000 0000	010	
3	0000 0000	011	
4	0000 0000	100	
5	0000 0000	101	
6	0000 0000	110	
7	0000 0000	111	
8	0000 0001	000	
⋮	⋮	⋮	
254	0001 1111	110	
255	0001 1111	111	

Page Number and Address Selection

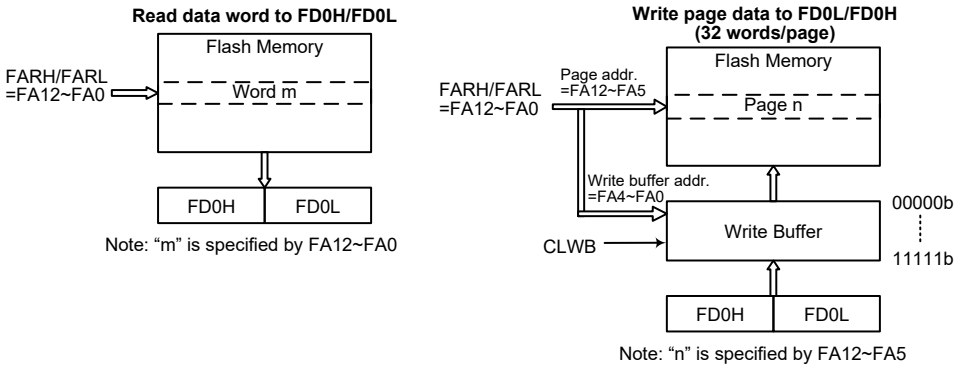

Flash Memory IAP Read/Write Structure

Write Buffer

The write buffer is used to store the written data temporarily when executing the write operation. The Write Buffer can be filled with written data after the Flash Memory Erase/Write Function has been successfully enabled by executing the Flash Memory Erase/Write Function Enable procedure. The write buffer can be cleared by configuring the CLWB bit in the FC2 register. The CLWB bit can be set high to enable the Clear Write Buffer procedure. When the procedure is finished this bit will be cleared to zero by hardware. It is recommended that the write buffer should be cleared by setting the CLWB bit high before the write buffer is used for the first time or when the data in the write buffer is updated.

The write buffer size is 32 words corresponding to a page. The write buffer address is mapped to a specific Flash memory page specified by the memory address bits, FA12~FA5. The data written into the FD0L and FD0H registers will be loaded into the write buffer. When data is written into the high byte data register, FD0H, it will result in the data stored in the high and low byte data registers both being written into the write buffer. It will also cause the Flash memory address to be incremented by one, after which the new address will be loaded into the FARH and FARL address registers. When the Flash memory address reaches the page boundary, 11111b of a page with 32 words, the address will now not be incremented but stop at the last address of the page. At this point a new page address should be specified for any other erase/write operations.

After a write process is finished, the write buffer will automatically be cleared by hardware. Note that the write buffer should be cleared manually by the application program when the data written into the Flash memory is incorrect in the data verification step. The data should again be written into the write buffer after the write buffer has been cleared when the data is found to be incorrect during the data verification step.

IAP Flash Program Memory Registers

There are two address registers, four pairs of 16-bit data registers and three control registersregisters, which are all located in Sector 0. Read and Write operations to the Flash memory are carried out using 16-bit data operations using the address and data registers and the control registers. Several registers control the overall operation of the internal Flash Program Memory. The address registers are named FARL and FARH, the data registers are named FDnL and FDnH, where n is equal to 0~3, and the control registers are named FC0, FC1 and FC2.

Register Name	Bit							
	7	6	5	4	3	2	1	0
FC0	CFWEN	FMOD2	FMOD1	FMOD0	FWPEN	FWT	FRDEN	FRD
FC1	D7	D6	D5	D4	D3	D2	D1	D0
FC2	—	—	—	—	—	—	FWERTS	CLWB
FARL	FA7	FA6	FA5	FA4	FA3	FA2	FA1	FA0
FARH	—	—	—	FA12	FA11	FA10	FA9	FA8
FD0L	D7	D6	D5	D4	D3	D2	D1	D0
FD0H	D15	D14	D13	D12	D11	D10	D9	D8
FD1L	D7	D6	D5	D4	D3	D2	D1	D0
FD1H	D15	D14	D13	D12	D11	D10	D9	D8
FD2L	D7	D6	D5	D4	D3	D2	D1	D0
FD2H	D15	D14	D13	D12	D11	D10	D9	D8
FD3L	D7	D6	D5	D4	D3	D2	D1	D0
FD3H	D15	D14	D13	D12	D11	D10	D9	D8

IAP Register List

• **FC0 Register**

Bit	7	6	5	4	3	2	1	0
Name	CFWEN	FMOD2	FMOD1	FMOD0	FWPEN	FWT	FRDEN	FRD
R/W	R/W	R/W	R/W	R/W	R/W	R/W	R/W	R/W
POR	0	0	0	0	0	0	0	0

Bit 7 **CFWEN**: Flash Memory Erase/Write function enable control
0: Flash memory erase/write function is disabled
1: Flash memory erase/write function has been successfully enabled

When this bit is cleared to 0 by application program, the Flash memory erase/write function is disabled. Note that writing a "1" into this bit results in no action. This bit is used to indicate the Flash memory erase/write function status. When this bit is set to 1 by hardware, it means that the Flash memory erase/write function is enabled successfully. Otherwise, the Flash memory erase/write function is disabled as the bit is zero.

Bit 6~4 **FMOD2~FMOD0**: Flash memory Mode selection
000: Write Mode
001: Page Erase Mode
011: Read Mode
110: Flash memory Erase/Write function Enable Mode
Other values: Reserved

These bits are used to select the Flash Memory operation modes. Note that the "Flash memory Erase/Write function Enable Mode" should first be successfully enabled before the Erase or Write Flash memory operation is executed.

Bit 3 **FWPEN**: Flash memory Erase/Write function enable procedure trigger control
0: Erase/Write function enable procedure is not triggered or procedure timer times out
1: Erase/Write function enable procedure is triggered and procedure timer starts to count

This bit is used to activate the Flash memory Erase/Write function enable procedure and an internal timer. It is set by the application programs and then cleared by hardware when the internal timer times out. The correct patterns must be written into the FD1L/FD1H, FD2L/FD2H and FD3L/FD3H register pairs respectively as soon as possible after the FWPEN bit is set high.

Bit 2 **FWT**: Flash memory write initiate control
0: Do not initiate Flash memory write or indicating that a Flash memory write process has completed
1: Initiate Flash memory write process

This bit is set by software and cleared by hardware when the Flash memory write process has completed.

Bit 1 **FRDEN**: Flash memory read enable control
0: Flash memory read disable
1: Flash memory read enable

This is the Flash memory Read Enable Bit which must be set high before any Flash memory read operations are carried out. Clearing this bit to zero will inhibit Flash memory read operations.

Bit 0 **FRD**: Flash memory read initiate control
0: Do not initiate Flash memory read or indicating that a Flash memory read process has completed
1: Initiate Flash memory read process

This bit is set by software and cleared by hardware when the Flash memory read process has completed.

Note: 1. The FWT, FRDEN and FRD bits cannot be set to "1" at the same time with a single instruction.
2. Ensure that the f_{SUB} clock is stable before executing the erase or write operation.
3. Note that the CPU will be stopped when a read, write or erase operation is successfully activated.
4. Ensure that the read, erase or write operation is totally complete before executing other operations.

• **FC1 Register**

Bit	7	6	5	4	3	2	1	0
Name	D7	D6	D5	D4	D3	D2	D1	D0
R/W	R/W	R/W	R/W	R/W	R/W	R/W	R/W	R/W
POR	0	0	0	0	0	0	0	0

Bit 7~0 **D7~D0**: Chip Reset Pattern
When a specific value of "55H" is written into this register, a reset signal will be generated to reset the whole chip.

• **FC2 Register**

Bit	7	6	5	4	3	2	1	0
Name	—	—	—	—	—	—	FWERTS	CLWB
R/W	—	—	—	—	—	—	R/W	R/W
POR	—	—	—	—	—	—	0	0

Bit 7~2 Unimplemented, read as "0"

Bit 1 **FWERTS**: Erase time and Write time selection
0: Erase time is 3.2ms (t_{FER})/Write time is 2.2ms (t_{FWR})
1: Erase time is 3.7ms (t_{FER})/Write time is 3.0ms (t_{FWR})

Bit 0 **CLWB**: Flash memory Write Buffer Clear control
0: Do not initiate a Write Buffer Clear process or indicating that a Write Buffer Clear process has completed
1: Initiate Write Buffer Clear process
This bit is set by software and cleared by hardware when the Write Buffer Clear process has completed.

• **FARL Register**

Bit	7	6	5	4	3	2	1	0
Name	FA7	FA6	FA5	FA4	FA3	FA2	FA1	FA0
R/W	R/W	R/W	R/W	R/W	R/W	R/W	R/W	R/W
POR	0	0	0	0	0	0	0	0

Bit 7~0 **FA7~FA0**: Flash Memory Address bit 7 ~ bit 0

• **FARH Register**

Bit	7	6	5	4	3	2	1	0
Name	—	—	—	FA12	FA11	FA10	FA9	FA8
R/W	—	—	—	R/W	R/W	R/W	R/W	R/W
POR	—	—	—	0	0	0	0	0

Bit 7~5 Unimplemented, read as "0"

Bit 4~0 **FA12~FA8**: Flash Memory Address bit 12 ~ bit 8

• **FD0L Register**

Bit	7	6	5	4	3	2	1	0
Name	D7	D6	D5	D4	D3	D2	D1	D0
R/W	R/W	R/W	R/W	R/W	R/W	R/W	R/W	R/W
POR	0	0	0	0	0	0	0	0

Bit 7~0 **D7~D0**: The first Flash Memory data bit 7 ~ bit 0
Note that data written into the low byte data register FD0L will only be stored in the FD0L register and not loaded into the lower 8-bit write buffer.

• **FD0H Register**

Bit	7	6	5	4	3	2	1	0
Name	D15	D14	D13	D12	D11	D10	D9	D8
R/W	R/W	R/W	R/W	R/W	R/W	R/W	R/W	R/W
POR	0	0	0	0	0	0	0	0

Bit 7~0 **D15~D8**: The first Flash Memory data bit 15 ~ bit 8

Note that when 8-bit data is written into the high byte data register FD0H, the whole 16 bits of data stored in the FD0H and FD0L registers will simultaneously be loaded into the 16-bit write buffer after which the contents of the Flash memory address register pair, FARH and FARL, will be incremented by one.

• **FD1L Register**

Bit	7	6	5	4	3	2	1	0
Name	D7	D6	D5	D4	D3	D2	D1	D0
R/W	R/W	R/W	R/W	R/W	R/W	R/W	R/W	R/W
POR	0	0	0	0	0	0	0	0

Bit 7~0 **D7~D0**: The second Flash Memory data bit 7 ~ bit 0

• **FD1H Register**

Bit	7	6	5	4	3	2	1	0
Name	D15	D14	D13	D12	D11	D10	D9	D8
R/W	R/W	R/W	R/W	R/W	R/W	R/W	R/W	R/W
POR	0	0	0	0	0	0	0	0

Bit 7~0 **D15~D8**: The second Flash Memory data bit 15 ~ bit 8

• **FD2L Register**

Bit	7	6	5	4	3	2	1	0
Name	D7	D6	D5	D4	D3	D2	D1	D0
R/W	R/W	R/W	R/W	R/W	R/W	R/W	R/W	R/W
POR	0	0	0	0	0	0	0	0

Bit 7~0 **D7~D0**: The third Flash Memory data bit 7 ~ bit 0

• **FD2H Register**

Bit	7	6	5	4	3	2	1	0
Name	D15	D14	D13	D12	D11	D10	D9	D8
R/W	R/W	R/W	R/W	R/W	R/W	R/W	R/W	R/W
POR	0	0	0	0	0	0	0	0

Bit 7~0 **D15~D8**: The third Flash Memory data bit 15 ~ bit 8

• **FD3L Register**

Bit	7	6	5	4	3	2	1	0
Name	D7	D6	D5	D4	D3	D2	D1	D0
R/W	R/W	R/W	R/W	R/W	R/W	R/W	R/W	R/W
POR	0	0	0	0	0	0	0	0

Bit 7~0 **D7~D0**: The fourth Flash Memory data bit 7 ~ bit 0

• **FD3H Register**

Bit	7	6	5	4	3	2	1	0
Name	D15	D14	D13	D12	D11	D10	D9	D8
R/W	R/W	R/W	R/W	R/W	R/W	R/W	R/W	R/W
POR	0	0	0	0	0	0	0	0

Bit 7~0 **D15~D8**: The fourth Flash Memory data bit 15 ~ bit 8

Flash Memory Erase/Write Flow

It is important to understand the Flash memory Erase/Write flow before the Flash memory contents are updated. Users can refer to the corresponding operation procedures when developing their IAP program to ensure that the Flash memory contents are correctly updated.

Flash Memory Erase/Write Flow Descriptions

1. Activate the "Flash Memory Erase/Write function enable procedure" first. When the Flash Memory Erase/Write function is successfully enabled, the CFWEN bit in the FC0 register will automatically be set high by hardware. After this, Erase or Write operations can be executed on the Flash memory. Refer to the "Flash Memory Erase/Write Function Enable Procedure" for details.
2. Configure the Flash memory address to select the desired erase page, tag address and then erase this page.

   For a page erase operation, set the FARL and FARH registers to specify the start address of the erase page, then write dummy data into the FD0H register to tag address. The current address will be internally incremented by one after each dummy data is written into the FD0H register. When the address reaches the page boundary, 11111b, the address will not be further incremented but stop at the last address of the page. Note that the write operation to the FD0H register is used to tag address, it must be implemented to determine which addresses to be erased.
3. Execute a Blank Check operation to ensure whether the page erase operation is successful or not. The "TABRD" instruction should be executed to read the Flash memory contents and to check if the contents is 0000h or not. If the Flash memory page erase operation fails, users should go back to Step 2 and execute the page erase operation again.
4. Write data into the specific page. Refer to the "Flash Memory Write Procedure" for details.
5. Execute the "TABRD" instruction to read the Flash memory contents and check if the written data is correct or not. If the data read from the Flash memory is different from the written data, it means that the page write operation has failed. The CLWB bit should be set high to clear the write buffer and then write the data into the specific page again if the write operation has failed.
6. Clear the CFWEN bit to disable the Flash Memory Erase/Write function enable mode if the current page Erase and Write operations are complete if no more pages need to be erased or written.

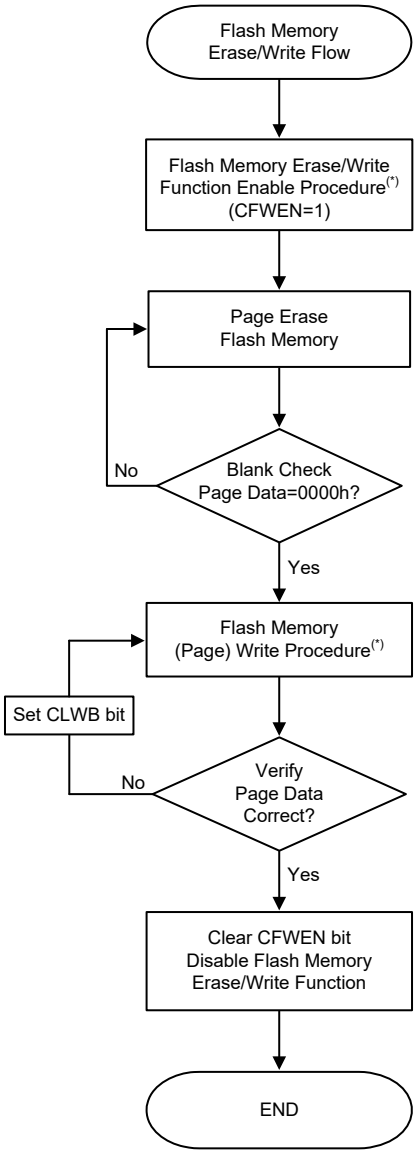

Flash Memory Erase/Write Flow

Note: *The Flash Memory Erase/Write Function Enable procedure and Flash Memory Write procedure will be described in the following sections.

Flash Memory Erase/Write Function Enable Procedure

The Flash Memory Erase/Write Function Enable Mode is specially designed to prevent the Flash memory contents from being wrongly modified. In order to allow users to change the Flash memory data using the IAP control registers, users must first enable the Flash memory Erase/Write function.

Flash Memory Erase/Write Function Enable Procedure Description

1. Write data “110” to the FMOD [2:0] bits in the FC0 register to select the Flash Memory Erase/Write Function Enable Mode.
2. Set the FWPEN bit in the FC0 register to “1” to activate the Flash Memory Erase/Write Enable Function. This will also activate an internal timer.
3. Write the correct data pattern into the Flash data registers, FD1L~FD3L and FD1H~FD3H, as soon as possible after the FWPEN bit is set high. The enable Flash memory erase/write function data pattern is 00H, 0DH, C3H, 04H, 09H and 40H corresponding to the FD1L~FD3L and FD1H~FD3H registers respectively.
4. Once the timer has timed out, the FWPEN bit will automatically be cleared to 0 by hardware regardless of the input data pattern.
5. If the written data pattern is incorrect, the Flash memory erase/write function will not be enabled successfully and the above steps should be repeated. If the written data pattern is correct, the Flash memory erase/write function will be enabled successfully.
6. Once the Flash memory erase/write function is enabled, the Flash memory contents can be updated by executing the page erase and write operations using the IAP control registers.

To disable the Flash memory erase/write function, the CFWEN bit in the FC0 register can be cleared. There is no need to execute the above procedure.

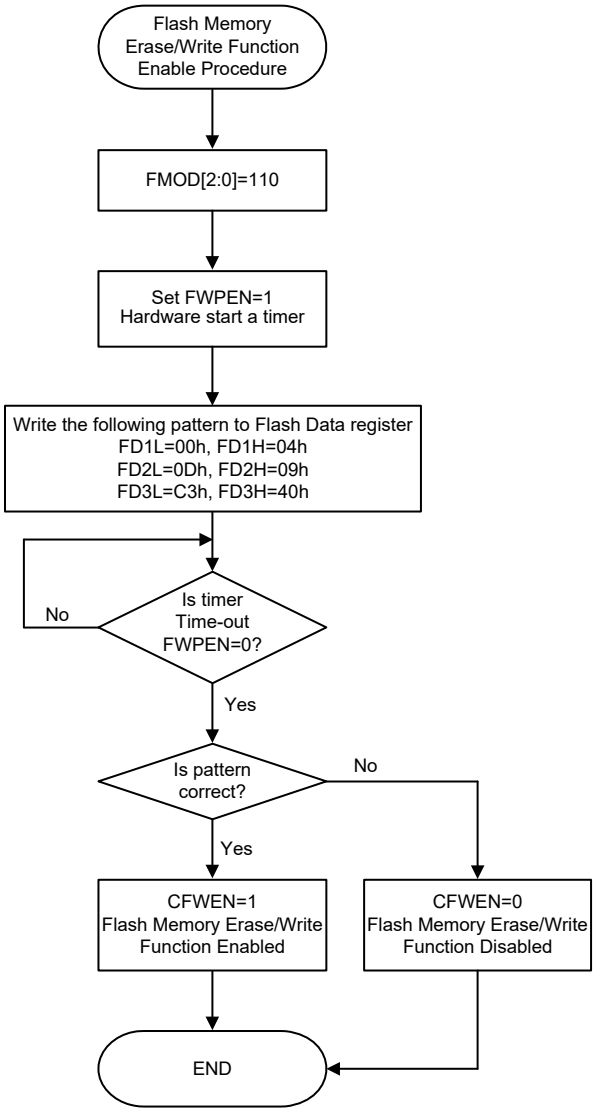

Flash Memory Erase/Write Function Enable Procedure

Flash Memory Write Procedure

After the Flash memory erase/write function has been successfully enabled as the CFWEN bit is set high, the data to be written into the Flash memory can be loaded into the write buffer. The selected Flash memory page data should be erased by properly configuring the IAP control registers before the data write procedure is executed.

The write buffer size is 32 words, known as a page, whose address is mapped to a specific Flash memory page specified by the memory address bits, FA12~FA5. It is important to ensure that the page where the write buffer data is located is the same one which the memory address bits, FA12~FA5, specify.

Flash Memory Consecutive Write Description

The maximum amount of write data is 32 words for each write operation. The write buffer address will be automatically incremented by one when consecutive write operations are executed. The start address of a specific page should first be written into the FARL and FARH registers. Then the data word should be written into the FD0L register and then the FD0H register. At the same time the write buffer address will be incremented by one and then the next data word can be written into the FD0L and FD0H registers for the next address without modifying the address register pair, FARH and FARL. When the write buffer address reaches the page boundary the address will not be further incremented but will stop at the last address of the page.

1. Activate the “Flash Memory Erase/Write function enable procedure”. Check the CFWEN bit value and then execute the erase/write operations if the CFWEN bit is set high. Refer to the “Flash Memory Erase/Write function enable procedure” for more details.
2. Set the FMOD2~FMOD0 to “001” to select the erase operation and set the CLWB bit high to clear the write buffer. Set the FWT bit high to erase the desired page which is specified by the FARH and FARL registers and has been tagged address. Wait until the FWT bit goes low.
3. Execute a Blank Check operation using the table read instruction to ensure that the erase operation has successfully completed.

   Go to step 2 if the erase operation is not successful.

   Go to step 4 if the erase operation is successful.
4. Set the FMOD2~FMOD0 to “000” to select the write operation.
5. Setup the desired start address in the FARH and FARL registers. Write the desired data words consecutively into the FD0L and FD0H registers within a page as specified by their consecutive addresses. The maximum written data number is 32 words.
6. Set the FWT bit high to write the data words from the write buffer to the Flash memory. Wait until the FWT bit goes low.
7. Verify the data using the table read instruction to ensure that the write operation has successfully completed.

   If the write operation has not successfully completed, set the CLWB bit high to clear the write buffer and then go to step 5.

   Go to step 8 if the write operation is successful.
8. Clear the CFWEN bit low to disable the Flash memory erase/write function.

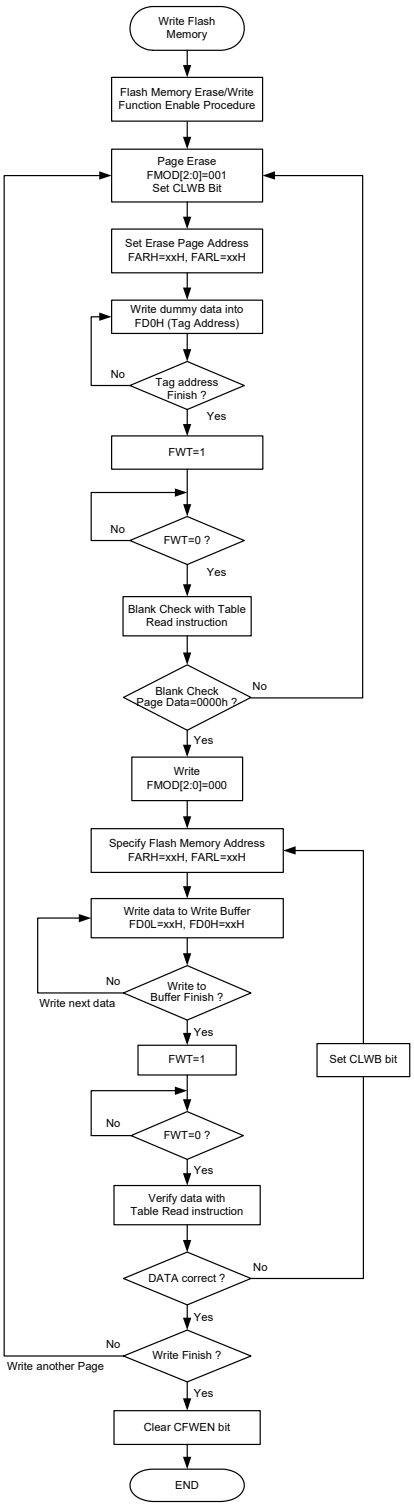

Flash Memory Consecutive Write Procedure

Note: 1. When the erase or write operation is successfully activated, all CPU operations will temporarily cease.
2. It will take certain time for the FWT bit state changing from high to low in the erase or write operation, which can be selected by the FWERTS bit in the FC2 register.

Flash Memory Non-consecutive Write Description

The main difference between Flash Memory Consecutive and Non-Consecutive Write operations is whether the data words to be written are located in consecutive addresses or not. If the data to be written is not located in consecutive addresses the desired address should be re-assigned after a data word is successfully written into the Flash Memory.

A two data word non-consecutive write operation is taken as an example here and described as follows:

1. Activate the "Flash Memory Erase/Write function enable procedure". Check the CFWEN bit value and then execute the erase/write operation if the CFWEN bit is set high. Refer to the "Flash Memory Erase/Write function enable procedure" for more details.
2. Set the FMOD2~FMOD0 to "001" to select the erase operation and set the CLWB bit high to clear the write buffer. Set the FWT bit high to erase the desired page which is specified by the FARH and FARL registers and has been tagged address. Wait until the FWT bit goes low.
3. Execute a Blank Check operation using the table read instruction to ensure that the erase operation has successfully completed.

   Go to step 2 if the erase operation is not successful.

   Go to step 4 if the erase operation is successful.
4. Set the FMOD2~FMOD0 to "000" to select the write operation.
5. Setup the desired address ADDR1 in the FARH and FRARL registers. Write the desired data word DATA1 first into the FD0L register and then into the FD0H register.
6. Set the FWT bit high to transfer the data word from the write buffer to the Flash memory. Wait until the FWT bit goes low.
7. Verify the data using the table read instruction to ensure that the write operation has successfully completed.

   If the write operation has not successfully completed, set the CLWB bit high to clear the write buffer and then go to step 5.

   Go to step 8 if the write operation is successful.
8. Setup the desired address ADDR2 in the FARH and FARL registers. Write the desired data word DATA2 first into the FD0L register and then into the FD0H register.
9. Set the FWT bit high to transfer the data word from the write buffer to the Flash memory. Wait until the FWT bit goes low.
10. Verify the data using the table read instruction to ensure that the write operation has successfully completed.

    If the write operation has not successfully completed, set the CLWB bit high to clear the write buffer and then go to step 8.

    Go to step 11 if the write operation is successful.
11. Clear the CFWEN bit low to disable the Flash memory erase/write function.

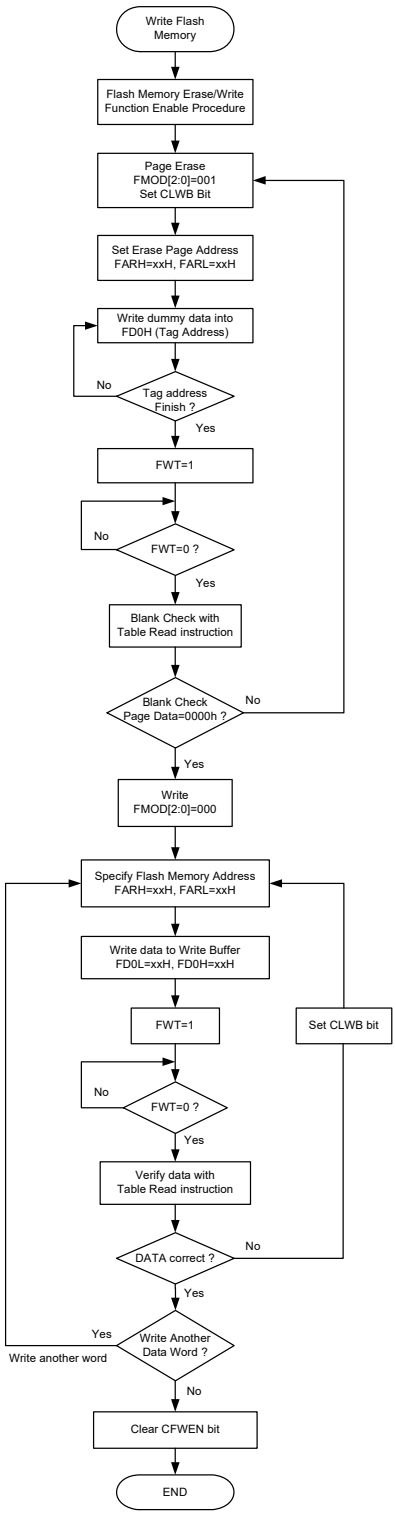

Flash Memory Non-consecutive Write Procedure

Note: 1. When the erase or write operation is successfully activated, all CPU operations will temporarily cease.
2. It will take certain time for the FWT bit state changing from high to low in the erase or write operation, which can be selected by the FWERTS bit in the FC2 register.

Important Points to Note for Flash Memory Write Operations

1. The "Flash Memory Erase/Write Function Enable Procedure" must be successfully activated before the Flash Memory erase/write operation is executed.
2. The Flash Memory erase operation is executed to erase a whole page.
3. The whole write buffer data will be written into the Flash memory in a page format. The corresponding address cannot exceed the page boundary.
4. After the data is written into the Flash memory the Flash memory contents must be read out using the table read instruction, TABRD, and checked if it is correct or not. If the data written into the Flash memory is incorrect, the write buffer should be cleared by setting the CLWB bit high and then writing the data again into the write buffer. Then activate a write operation on the same Flash memory page without erasing it. The data check, buffer clear and data re-write steps should be repeatedly executed until the data written into the Flash memory is correct.
5. The system frequency should be setup to the maximum application frequency when data write and data check operations are executed using the IAP function.

Flash Memory Read Procedure

To activate the Flash Memory Read procedure, the FMOD2~FMOD0 should be set to "011" to select the Flash memory read mode and the FRDEN bit should be set high to enable the read function. The desired Flash memory address should be written into the FARH and FARL registers and then the FRD bit should be set high. After this the Flash memory read operation will be activated. The data stored in the specified address can be read from the data registers, FD0H and FD0L, when the FRD bit goes low. There is no need to first activate the Flash Memory Erase/Write Function Enable Procedure before the Flash memory read operation is executed.

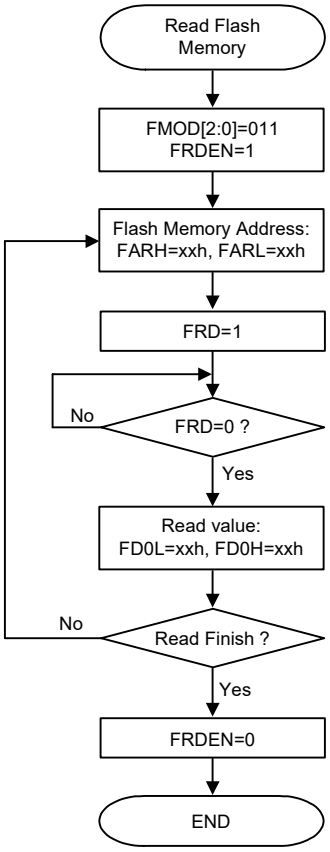

Flash Memory Read Procedure

Note: 1. When the read operation is successfully activated, all CPU operations will temporarily cease.

2. It will take a typical time of three instruction cycles for the FRD bit state changing from high to low.

Data Memory

The Data Memory is an 8-bit wide RAM internal memory and is the location where temporary information is stored.

Categorised into two types, the first of these is an area of RAM, known as the Special Function Data Memory. These registers have fixed locations and are necessary for correct operation of the device. Many of these registers can be read from and written to directly under program control, however, some remain protected from user manipulation. The second area of Data Memory is known as the General Purpose Data Memory, which is reserved for general purpose use. All locations within this area are read and write accessible under program control.

Switching between the different Data Memory sectors is achieved by properly setting the Memory Pointers to correct value when using the indirectly accessing method.

Structure

The Data Memory is subdivided into several sectors, all of which are implemented in 8-bit wide Memory. Each of the Data Memory Sector is categorized into two types, the Special Purpose Data Memory and the General Purpose Data Memory. The address range of the Special Purpose Data Memory for the device is from 00H to 7FH while the General Purpose Data Memory address range is from 80H to FFH.

Special Purpose Data Memory	General Purpose Data Memory	
Located Sectors	Capacity	Sector: Address
Sector 0: 00H~7FH Sector 1: 40H (EEC Only)	512×8	0: 80H~FFH 1: 80H~FFH 2: 80H~FFH 3: 80H~FFH

Data Memory Summary

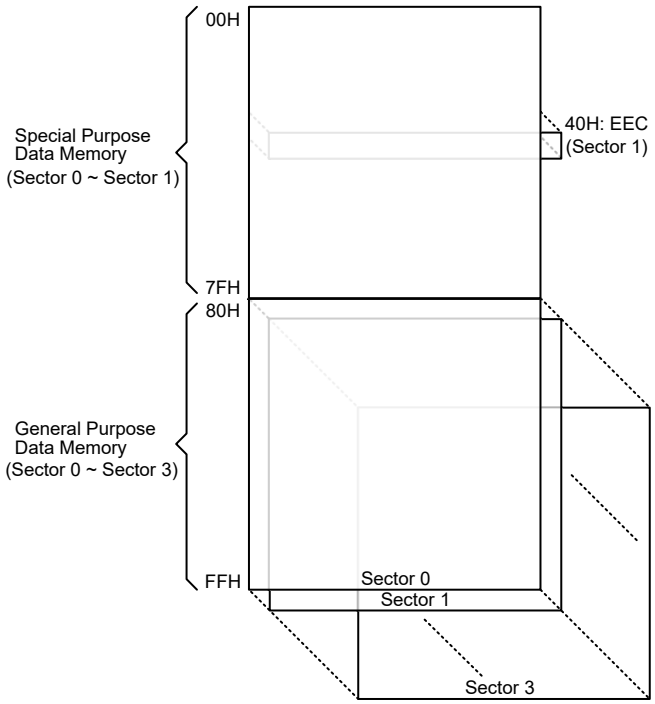

Data Memory Structure

Data Memory Addressing

For device that supports the extended instructions, there is no Bank Pointer for Data Memory. For Data Memory the desired Sector is pointed by the MP1H or MP2H register and the certain Data Memory address in the selected sector is specified by the MP1L or MP2L register when using indirect addressing access.

Direct Addressing can be used in all sectors using the corresponding instruction which can address all available data memory space. For the accessed data memory which is located in any data memory sectors except sector 0, the extended instructions can be used to access the data memory instead of using the indirect addressing access. The main difference between standard instructions and extended instructions is that the data memory address “m” in the extended instructions has 10 valid bits for this device, the high byte indicates a sector and the low byte indicates a specific address.

General Purpose Data Memory

All microcontroller programs require an area of read/write memory where temporary data can be stored and retrieved for use later. It is this area of RAM memory that is known as General Purpose Data Memory. This area of Data Memory is fully accessible by the user programming for both reading and writing operations. By using the bit operation instructions individual bits can be set or reset under program control giving the user a large range of flexibility for bit manipulation in the Data Memory.

Special Purpose Data Memory

This area of Data Memory is where registers, necessary for the correct operation of the microcontroller, are stored. Most of the registers are both readable and writeable but some are protected and are readable only, the details of which are located under the relevant Special Function Register section. Note that for locations that are unused, any read instruction to these addresses will return the value “00H”.

	Sector 0	Sector 1
00H	IAR0	
01H	MP0	
02H	IAR1	
03H	MP1L	
04H	MP1H	
05H	ACC	
06H	PCL	
07H	TBLP	
08H	TBLH	
09H	TBHP	
0AH	STATUS	
0BH		
0CH	IAR2	
0DH	MP2L	
0EH	MP2H	
0FH	RSTFC	
10H	LVRC	
11H	TLVRC	
12H	SCC	
13H	HIRCC	
14H	PA	
15H	PAC	
16H	PAPU	
17H	PAWU	
18H	PB	
19H	PBC	
1AH	PBPU	
1BH	PC	
1CH	PCC	
1DH	PCPU	
1EH	PD	
1FH	PDC	
20H	PDPU	
21H	PAS0	
22H	PAS1	
23H	PBS0	
24H	PBS1	
25H	PCS0	
26H	PCS1	
27H		
28H	IECC	
29H	WDTC	
2AH	TB0C	
2BH	TB1C	
2CH	SADC0	
2DH	SADC1	
2EH	SADC2	
2FH	SADOL	
30H	SADOH	
31H		
32H	INTC0	
33H	INTC1	
34H	INTC2	
35H	INTC3	
36H	MFI0	
37H	MFI1	
38H	MFI2	
39H	INTEG	
3AH	PMPS0	
3BH	PMPS1	
3CH	CRCCR	
3DH	CRCIN	
3EH	CRCDL	
3FH	CRCDH	

	Sector 0	Sector 1
40H	EEAL	EEC
41H	EEAH	
42H	EED	
43H	FC0	
44H	FC1	
45H	FC2	
46H	FARL	
47H	FARH	
48H	FD0L	
49H	FD0H	
4AH	FD1L	
4BH	FD1H	
4CH	FD2L	
4DH	FD2H	
4EH	FD3L	
4FH	FD3H	
50H	CTMC0	
51H	CTMC1	
52H	CTMDL	
53H	CTMDH	
54H	CTMAL	
55H	CTMAH	
56H	STM0C0	
57H	STM0C1	
58H	STM0DL	
59H	STM0DH	
5AH	STM0AL	
5BH	STM0AH	
5CH	STM1C0	
5DH	STM1C1	
5EH	STM1DL	
5FH	STM1DH	
60H	STM1AL	
61H	STM1AH	
62H	STM1RP	
63H	STKPTR	
64H	PCRL	
65H	PCRH	
66H	SCOMC	
67H	SIMC0	
68H	SIMC1	
69H	SIMD	
6AH	SIMA/SIMC2	
6BH	SIMTOC	
6CH		
6DH		
6EH	DA0L	
6FH	DA0H	
70H	DA1L	
71H	DA1H	
72H	DAOPC	
73H	OPVOS	
74H	PSCR	
75H	IFS	
76H	RSTC	
77H	USR	
78H	UCR1	
79H	UCR2	
7AH	UCR3	
7BH	BRDH	
7CH	BRDL	
7DH	UFCR	
7EH	TXR_RXR	
7FH	RxCNT	

: Unused, read as 00H

: Reserved, cannot be changed

Special Purpose Data Memory Structure

Special Function Register Description

Most of the Special Function Register details will be described in the relevant functional section. However, several registers require a separate description in this section.

Indirect Addressing Registers – IAR0, IAR1, IAR2

The Indirect Addressing Registers, IAR0, IAR1 and IAR2, although having their locations in normal RAM register space, do not actually physically exist as normal registers. The method of indirect addressing for RAM data manipulation uses these Indirect Addressing Registers and Memory Pointers, in contrast to direct memory addressing, where the actual memory address is specified. Actions on the IAR0, IAR1 and IAR2 registers will result in no actual read or write operation to these registers but rather to the memory location specified by their corresponding Memory Pointers, MP0, MP1L/MP1H or MP2L/MP2H. Acting as a pair, IAR0 and MP0 can together access data only from Sector 0 while the IAR1 register together with MP1L/MP1H register pair and IAR2 register together with MP2L/MP2H register pair can access data from any Data Memory sector. As the Indirect Addressing Registers are not physically implemented, reading the Indirect Addressing Registers indirectly will return a result of "00H" and writing to the registers indirectly will result in no operation.

Memory Pointers – MP0, MP1H/MP1L, MP2H/MP2L

Five Memory Pointers, known as MP0, MP1L, MP1H, MP2L and MP2H, are provided. These Memory Pointers are physically implemented in the Data Memory and can be manipulated in the same way as normal registers providing a convenient way with which to address and track data. When any operation to the relevant Indirect Addressing Registers is carried out, the actual address that the microcontroller is directed to is the address specified by the related Memory Pointer. MP0, together with Indirect Addressing Register, IAR0, are used to access data from Sector 0, while MP1L/MP1H together with IAR1 and MP2L/MP2H together with IAR2 are used to access data from all data sectors according to the corresponding MP1H or MP2H register. Direct Addressing can be used in all data sectors using the extended instructions which can address all available data memory space.

The following example shows how to clear a section of four Data Memory locations already defined as locations adres1 to adres4.

Indirect Addressing Program Example

Example 1

```
data .section 'data'
adres1 db ?
adres2 db ?
adres3 db ?
adres4 db ?
block  db ?
code .section at 0 code
org 00h
start:
     mov a,04h               ; setup size of block
     mov block,a
     mov a,offset adres1     ; Accumulator loaded with first RAM address
     mov mp0,a               ; setup memory pointer with first RAM address
loop:
     clr IAR0                ; clear the data at address defined by MP0
     inc mp0                 ; increment memory pointer
     sdz block               ; check if last memory location has been cleared
     jmp loop
continue:
```

Example 2

```
data .section 'data'
adres1 db ?
adres2 db ?
adres3 db ?
adres4 db ?
block  db ?
code .section at 0 'code'
org 00h
start:
     mov a,04h                ; setup size of block
     mov block,a
     mov a,01h                ; setup the memory sector
     mov mp1h,a
     mov a,offset adres1      ; Accumulator loaded with first RAM address
     mov mp1l,a               ; setup memory pointer with first RAM address
loop:
     clr IAR1                 ; clear the data at address defined by MP1L
     inc mp1l                 ; increment memory pointer MP1L
     sdz block                ; check if last memory location has been cleared
     jmp loop
continue:
:
```

The important point to note here is that in the example shown above, no reference is made to specific RAM addresses.

Direct Addressing Program Example using extended instructions

```
data .section 'data'
temp db ?
code .section at 0 code
org 00h
start:
     lmov a,[m]               ; move [m] data to acc
     lsub a, [m+1]            ; compare [m] and [m+1] data
     snz  c                   ; [m]>[m+1]?
     jmp  continue            ; no
     lmov a,[m]               ; yes, exchange [m] and [m+1] data
     mov  temp,a
     lmov a,[m+1]
     lmov [m],a
     mov  a,temp
     lmov [m+1],a
continue:
:
```

Note: Here "m" is a data memory address located in any data memory sectors. For example, m=1F0H, it indicates address 0F0H in Sector 1.

Accumulator – ACC

The Accumulator is central to the operation of any microcontroller and is closely related with operations carried out by the ALU. The Accumulator is the place where all intermediate results from the ALU are stored. Without the Accumulator it would be necessary to write the result of each calculation or logical operation such as addition, subtraction, shift, etc., to the Data Memory resulting in higher programming and timing overheads. Data transfer operations usually involve the temporary storage function of the Accumulator; for example, when transferring data between one user-defined register and another, it is necessary to do this by passing the data through the Accumulator as no direct transfer between two registers is permitted.

Program Counter Low Byte Register – PCL

To provide additional program control functions, the low byte of the Program Counter is made accessible to programmers by locating it within the Special Purpose area of the Data Memory. By manipulating this register, direct jumps to other program locations are easily implemented. Loading a value directly into this PCL register will cause a jump to the specified Program Memory location; however, as the register is only 8-bit wide, only jumps within the current Program Memory page are permitted. When such operations are used, note that a dummy cycle will be inserted.

Look-up Table Registers – TBLP, TBHP, TBLH

These three special function registers are used to control operation of the look-up table which is stored in the Program Memory. The TBLP and TBHP registers are the table pointer pair and indicates the location where the table data is located. Their value must be setup before any table read instructions are executed. Their value can be changed, for example using the “INC” or “DEC” instructions, allowing for easy table data pointing and reading. TBLH is the location where the high order byte of the table data is stored after a table read data instruction has been executed. Note that the lower order table data byte is transferred to a user defined location.

Status Register – STATUS

This 8-bit register contains the zero flag (Z), carry flag (C), auxiliary carry flag (AC), overflow flag (OV), SC flag, CZ flag, power down flag (PDF), and watchdog time-out flag (TO). These arithmetic/logical operation and system management flags are used to record the status and operation of the microcontroller.

With the exception of the TO and PDF flags, bits in the status register can be altered by instructions like most other registers. Any data written into the status register will not change the TO or PDF flag. In addition, operations related to the status register may give different results due to the different instruction operations. The TO flag can be affected only by a system power-up, a WDT time-out or by executing the “CLR WDT” or “HALT” instruction. The PDF flag is affected only by executing the “HALT” or “CLR WDT” instruction or during a system power-up.

The Z, OV, AC, C, SC and CZ flags generally reflect the status of the latest operations.

- C is set if an operation results in a carry during an addition operation or if a borrow does not take place during a subtraction operation; otherwise C is cleared. C is also affected by a rotate through carry instruction.
- AC is set if an operation results in a carry out of the low nibbles in addition, or no borrow from the high nibble into the low nibble in subtraction; otherwise AC is cleared.
- Z is set if the result of an arithmetic or logical operation is zero; otherwise Z is cleared.
- OV is set if an operation results in a carry into the highest-order bit but not a carry out of the highest-order bit, or vice versa; otherwise OV is cleared.

- PDF is cleared by a system power-up or executing the "CLR WDT" instruction. PDF is set by executing the "HALT" instruction.
- TO is cleared by a system power-up or executing the "CLR WDT" or "HALT" instruction. TO is set by a WDT time-out.
- SC is the result of the "XOR" operation which is performed by the OV flag and the MSB of the current instruction operation result.
- CZ is the operational result of different flags for different instructions. Refer to register definitions for more details.

In addition, on entering an interrupt sequence or executing a subroutine call, the status register will not be pushed onto the stack automatically. If the content of the status register is important and if the subroutine can corrupt the status register, precautions must be taken to correctly save it.

• STATUS Register

Bit	7	6	5	4	3	2	1	0
Name	SC	CZ	TO	PDF	OV	Z	AC	C
R/W	R/W	R/W	R	R	R/W	R/W	R/W	R/W
POR	x	x	0	0	x	x	x	x

"x": unknown

Bit 7 **SC**: The result of the "XOR" operation which is performed by the OV flag and the MSB of the instruction operation result

Bit 6 **CZ**: The operational result of different flags for different instructions
For SUB/SUBM/LSUB/LSUBM instructions, the CZ flag is equal to the Z flag.
For SBC/SBCM/LSBC/LSBCM instructions, the CZ flag is the "AND" operation result which is performed by the previous operation CZ flag and current operation Z flag. For other instructions, the CZ flag will not be affected.

Bit 5 **TO**: Watchdog Time-out flag
0: After power up or executing the "CLR WDT" or "HALT" instruction
1: A watchdog time-out occurred

Bit 4 **PDF**: Power down flag
0: After power up or executing the "CLR WDT" instruction
1: By executing the "HALT" instruction

Bit 3 **OV**: Overflow flag
0: No overflow
1: An operation results in a carry into the highest-order bit but not a carry out of the highest-order bit or vice versa

Bit 2 **Z**: Zero flag
0: The result of an arithmetic or logical operation is not zero
1: The result of an arithmetic or logical operation is zero

Bit 1 **AC**: Auxiliary flag
0: No auxiliary carry
1: An operation results in a carry out of the low nibbles, in addition, or no borrow from the high nibble into the low nibble in subtraction

Bit 0 **C**: Carry flag
0: No carry-out
1: An operation results in a carry during an addition operation or if a borrow does not take place during a subtraction operation
The "C" flag is also affected by a rotate through carry instruction.

EEPROM Data Memory

The device contains an area of internal EEPROM Data Memory. EEPROM is by its nature a non-volatile form of re-programmable memory, with data retention even when its power supply is removed. By incorporating this kind of data memory, a whole new host of application possibilities are made available to the designer. The availability of EEPROM storage allows information such as product identification numbers, calibration values, specific user data, system setup data or other product information to be stored directly within the product microcontroller. The process of reading and writing data to the EEPROM memory has been reduced to a very trivial affair.

EEPROM Data Memory Structure

The EEPROM Data Memory capacity is 512×8 bits for this device. Unlike the Program Memory and RAM Data Memory, the EEPROM Data Memory is not directly mapped into memory space and is therefore not directly addressable in the same way as the other types of memory. Read and Write operations to the EEPROM are carried out in single byte operations using a pair of address registers and a data register in Sector 0 and a single control register in Sector 1.

EEPROM Registers

Four registers control the overall operation of the internal EEPROM Data Memory. These are the address registers, EEAL and EEAH, the data register, EED and a single control register, EEC. As the EEAL, EEAH and EED registers are located in Sector 0, they can be directly accessed in the same way as any other Special Function Register. The EEC register, however, being located in Sector 1, can only be read from or written to indirectly using the MP1H/MP1L or MP2H/MP2L Memory Pointer pair and Indirect Addressing Register, IAR1 or IAR2. Because the EEC control register is located at address 40H in Sector 1, the Memory Pointer low byte register, MP1L or MP2L, must first be set to the value 40H and the Memory Pointer high byte register, MP1H or MP2H, set to the value, 01H, before any operations on the EEC register are executed.

Register Name	Bit							
	7	6	5	4	3	2	1	0
EEAL	EEAL7	EEAL6	EEAL5	EEAL4	EEAL3	EEAL2	EEAL1	EEAL0
EEAH	—	—	—	—	—	—	—	EEAH0
EED	D7	D6	D5	D4	D3	D2	D1	D0
EEC	EWERTS	EREN	ER	MODE	WREN	WR	RDEN	RD

EEPROM Register List

- **EEAL Register**

Bit	7	6	5	4	3	2	1	0
Name	EEAL7	EEAL6	EEAL5	EEAL4	EEAL3	EEAL2	EEAL1	EEAL0
R/W	R/W	R/W	R/W	R/W	R/W	R/W	R/W	R/W
POR	0	0	0	0	0	0	0	0

Bit 7~0 **EEAL7~EEAL0**: Data EEPROM address low byte bit 7 ~ bit 0

- **EEAH Register**

Bit	7	6	5	4	3	2	1	0
Name	—	—	—	—	—	—	—	EEAH0
R/W	—	—	—	—	—	—	—	R/W
POR	—	—	—	—	—	—	—	0

Bit 7~1 Unimplemented, read as “0”

Bit 0 **EEAH0**: Data EEPROM address high byte bit 0

• **EED Register**

Bit	7	6	5	4	3	2	1	0
Name	D7	D6	D5	D4	D3	D2	D1	D0
R/W	R/W	R/W	R/W	R/W	R/W	R/W	R/W	R/W
POR	0	0	0	0	0	0	0	0

Bit 7~0 **D7~D0**: Data EEPROM data bit 7 ~ bit 0

• **EEC Register**

Bit	7	6	5	4	3	2	1	0
Name	EWERTS	EREN	ER	MODE	WREN	WR	RDEN	RD
R/W	R/W	R/W	R/W	R/W	R/W	R/W	R/W	R/W
POR	0	0	0	0	0	0	0	0

Bit 7 **EWERTS**: Data EEPROM Erase time and Write time select
0: Erase time is 3.2ms (t_{EEER})/Write time is 2.2ms (t_{EEWR})
1: Erase time is 3.7ms (t_{EEER})/Write time is 3.0ms (t_{EEWR})

Bit 6 **EREN**: Data EEPROM erase enable
0: Disable
1: Enable

This bit is used to enable Data EEPROM erase function and must be set high before Data EEPROM erase operations are carried out. This bit will be automatically reset to zero by the hardware after the erase cycle has finished. Clearing this bit to zero will inhibit data EEPROM erase operations.

Bit 5 **ER**: Data EEPROM erase control
0: Erase cycle has finished
1: Activate an erase cycle

This is the Data EEPROM Erase Control Bit. When this bit is set high by the application program, an erase cycle will be activated. This bit will be automatically reset to zero by hardware after the erase cycle has finished. Setting this bit high will have no effect if the EREN bit has not first been set high.

Bit 4 **MODE**: Data EEPROM operation mode selection
0: Byte operation mode
1: Page operation mode

This is the EEPROM operation mode selection bit. When the bit is set high by the application program, the Page write, erase or read function will be selected. Otherwise, the byte write or read function will be selected. The EEPROM page buffer size is 16-byte.

Bit 3 **WREN**: Data EEPROM write enable
0: Disable
1: Enable

This is the Data EEPROM Write Enable bit which must be set high before Data EEPROM write operations are carried out. Clearing this bit to zero will inhibit Data EEPROM write operations. Note that the WREN bit will automatically be cleared to zero after the write operation is finished.

Bit 2 **WR**: Data EEPROM write control
0: Write cycle has finished
1: Activate a write cycle

This is the Data EEPROM Write Control Bit. When this bit is set high by the application program, a write cycle will be activated. This bit will be automatically reset to zero by hardware after the write cycle has finished. Setting this bit high will have no effect if the WREN has not first been set high.

Bit 1 **RDEN**: Data EEPROM read enable
0: Disable
1: Enable

This is the Data EEPROM Read Enable Bit, which must be set high before Data EEPROM read operations are carried out. Clearing this bit to zero will inhibit Data EEPROM read operations.

Bit 0 **RD**: Data EEPROM read control
0: Read cycle has finished
1: Activate a read cycle

This is the Data EEPROM Read Control Bit. When this bit is set high by the application program, a read cycle will be activated. This bit will be automatically reset to zero by hardware after the read cycle has finished. Setting this bit high will have no effect if the RDEN has not first been set high.

Note: 1. The EREN, ER, WREN, WR, RDEN and RD cannot be set to "1" at the same time in one instruction.
2. Ensure that the f_{SUB} clock is stable before executing the erase or write operation.
3. Ensure that the erase or write operation is totally complete before changing contents of the EEPROM related registers or activating the IAP function.

Read Operation from the EEPROM

Reading data from the EEPROM can be implemented by two modes for this device, byte read mode or page read mode, which is controlled by the EEPROM operation mode selection bit, MODE, in the EEC register.

Byte Read Mode

The EEPROM byte read operation can be executed when the mode selection bit, MODE, is cleared to zero. For a byte read operation the desired EEPROM address should first be placed in the EEAH and EEAL registers, as well as the read enable bit, RDEN, in the EEC register should be set high to enable the read function. Then setting the RD bit high will initiate the EEPROM byte read operation. Note that setting only the RD bit high will not initiate a read operation if the RDEN bit is not set high. When the read cycle terminates, the RD bit will automatically be cleared to zero and the EEPROM data can be read from the EED register. The data will remain in the EED register until another read or write operation is executed. The application program can poll the RD bit to determine when the data is valid for reading.

Page Read Mode

The EEPROM page read operation can be executed when the mode selection bit, MODE, is set high. The page size can be up to 16 bytes for the page read operation. For a page read operation the start address of the desired EEPROM page should first be placed in the EEAH and EEAL registers, as well as the read enable bit, RDEN, in the EEC register should be set high to enable the read function. Then setting the RD bit high will initiate the EEPROM page read operation. Note that setting only the RD bit high will not initiate a read operation if the RDEN bit is not set high. When the current byte read cycle terminates, the RD bit will automatically be cleared indicating that the EEPROM data can be read from the EED register, and the current address will be incremented by one by hardware. The data which is stored in the next EEPROM address can continuously be read out when the RD bit is set high again without reconfiguring the EEPROM address and RDEN control bit. The application program can poll the RD bit to determine when the data is valid for reading.

The EEPROM address higher 5 bits are used to specify the desired page location while the lower 4 bits are used to point to the actual address. In the page read operation mode the lower 4-bit address value will automatically be incremented by one. However, the higher 5-bit address value will not be incremented by hardware. When the EEPROM address lower 4-bit value which is internally incremented by one in the page mode reaches the page boundary, known as 0FH, the EEPROM address lower 4-bit value will stop at 0FH. The EEPROM address will not "roll over".

Page Erase Operation to the EEPROM

The EEPROM page erase operation can be executed when the mode selection bit, MODE, is set high. The EEPROM is capable of a 16-byte page erase. The internal page buffer will be cleared by hardware after power on reset. When the EEPROM erase enable control bit, namely EREN, is changed from “1” to “0”, the internal page buffer will also be cleared. Note that when the EREN bit is changed from “0” to “1”, the internal page buffer will not be cleared. The EEPROM address higher 5 bits are used to specify the desired page location while the lower 4 bits are used to point to the actual address. In the page erase operation mode the lower 4-bit address value will automatically be incremented by one after each dummy data byte is written into the EED register. However, the higher 5-bit address value will not be incremented by hardware. When the EEPROM address lower 4-bit value which is internally incremented by one in the page mode reaches the page boundary, known as 0FH, the EEPROM address lower 4-bit value will stop at 0FH. The EEPROM address will not “roll over”.

For page erase operations the start address of the desired EEPROM page should first be placed in the EEAH and EEAL registers and then write a dummy data into the EED register to tag address. After a dummy data is written, the current address is tagged and the lower 4-bit address value will be automatically incremented by one. As the maximum data length for a page is 16 bytes, when the address reaches the page boundary, 0FH, the address will not be further incremented but stop at the last address of the page. Note that the dummy write operations must be implemented to determine which addresses to be erased. When all desired addresses are tagged, then the EREN bit in the EEC register can be set high to enable erase operations and the ER bit must be immediately set high to initiate the EEPROM erase process. These two instructions must be executed in two consecutive instruction cycles to activate an erase operation successfully. The global interrupt enable bit EMI should also first be cleared before implementing an erase operation and then set again after a valid erase activation procedure has completed.

As the EEPROM erase cycle is controlled using an internal timer whose operation is asynchronous to microcontroller system clock, a certain time will elapse before the data will have been erased from the EEPROM. Detecting when the erase cycle has finished can be implemented either by polling the ER bit in the EEC register or by using the EEPROM interrupt. When the erase cycle terminates, the ER bit will be automatically cleared to zero by the microcontroller, indicating that the page data has been erased. The application program can therefore poll the ER bit to determine when the erase cycle has ended. After the erase operation is finished, the EREN bit will be cleared to zero by hardware. The Data EEPROM erased page content will all be zero after a page erase operation.

Write Operation to the EEPROM

Writing data to the EEPROM can be implemented by two modes for this device, byte write mode or page write mode, which is controlled by the EEPROM operation mode selection bit, MODE, in the EEC register.

Byte Write Mode

The EEPROM byte write operation can be executed when the mode selection bit, MODE, is cleared to zero. For byte write operations the desired EEPROM address should first be placed in the EEAH and EEAL registers and the data to be written should be placed in the EED register. To write data to the EEPROM, the write enable bit, WREN, in the EEC register must first be set high to enable the write function. After this, the WR bit in the EEC register must be immediately set high to initiate a write cycle. These two instructions must be executed in two consecutive instruction cycles to activate a write operation successfully. The global interrupt bit EMI should also first be cleared

before implementing any write operations, and then set high again after a valid write activation procedure has completed. Note that setting the WR bit high only will not initiate a write cycle if the WREN bit is not set.

As the EEPROM write cycle is controlled using an internal timer whose operation is asynchronous to microcontroller system clock, a certain time will elapse before the data will have been written into the EEPROM. Detecting when the write cycle has finished can be implemented either by polling the WR bit in the EEC register or by using the EEPROM interrupt. When the write cycle terminates, the WR bit will be automatically cleared to zero by the microcontroller, indicating that the data has been written to the EEPROM. The application program can therefore poll the WR bit to determine when the write cycle has ended. After the write operation is finished, the WREN bit will be cleared to zero by hardware. Note that a byte erase operation will automatically be executed before a byte write operation is successfully activated.

Page Write Mode

Before a page write operation is executed, it is important to ensure that a relevant page erase operation has been successfully executed. The EEPROM page write operation can be executed when the mode selection bit, MODE, is set high. The EEPROM is capable of a 16-byte page write. The internal page buffer will be cleared by hardware after power-on reset. When the EEPROM write enable control bit, namely WREN, is changed from “1” to “0”, the internal page buffer will also be cleared. Note that when the WREN bit is changed from “0” to “1”, the internal page buffer will not be cleared. A page write is initiated in the same way as a byte write initiation except that the EEPROM data can be written up to 16 bytes. The EEPROM address higher 5 bits are used to specify the desired page location while the lower 4 bits are used to point to the actual address. In the page write operation mode the lower 4-bit address value will automatically be incremented by one after each data byte is written into the EED register. However, the higher 5-bit address value will not be incremented by hardware. When the EEPROM address lower 4-bit value which is internally incremented by one in the page mode reaches the page boundary, known as 0FH, the EEPROM address lower 4-bit value will stop at 0FH. The EEPROM address will not “roll over”. At this point any data write operations to the EED register will be invalid.

For page write operations the start address of the desired EEPROM page should first be placed in the EEAH and EEAL registers and the data to be written should be placed in the EED register. The maximum data length for a page is 16 bytes. Note that when a data byte is written into the EED register, then the data in the EED register will be loaded into the internal page buffer and the current address value will automatically be incremented by one. When the page data is completely written into the page buffer, then the WREN bit in the EEC register should be set high to enable write operations and the WR bit must be immediately set high to initiate the EEPROM write process. These two instructions must be executed in two consecutive instruction cycles to activate a write operation successfully. The global interrupt enable bit EMI should also first be cleared before implementing any write operations, and then set high again after a valid write activation procedure has completed. Note that setting the WR bit high only will not initiate a write cycle if the WREN bit is not set.

As the EEPROM write cycle is controlled using an internal timer whose operation is asynchronous to microcontroller system clock, a certain time will elapse before the data will have been written into the EEPROM. Detecting when the write cycle has finished can be implemented either by polling the WR bit in the EEC register or by using the EEPROM interrupt. When the write cycle terminates, the WR bit will be automatically cleared to zero by the microcontroller, indicating that the data has been written to the EEPROM. The application program can therefore poll the WR bit to determine when the write cycle has ended. After the write operation is finished, the WREN bit will be cleared to zero by hardware.

Write Protection

Protection against inadvertent write operation is provided in several ways. After the device is powered-on the Write Enable bit in the control register will be cleared preventing any write operations. Also at power-on the Memory Pointer high byte register, MP1H or MP2H, will be reset to zero, which means that Data Memory Sector 0 will be selected. As the EEPROM control register is located in Sector 1, this adds a further measure of protection against spurious write operations. During normal program operation, ensuring that the Write Enable bit in the control register is cleared will safeguard against incorrect write operations.

EEPROM Interrupt

The EEPROM interrupt is generated when an EEPROM erase or write cycle has ended. The EEPROM interrupt must first be enabled by setting the DEE bit in the relevant interrupt register. When an EEPROM erase or write cycle ends, the DEF request flag will be set. If the global and EEPROM interrupts are enabled and the stack is not full, a jump to the EEPROM Interrupt vector will take place. When the interrupt is serviced, the EEPROM interrupt flag will be automatically reset. More details can be obtained in the Interrupt section.

Programming Considerations

Care must be taken that data is not inadvertently written to the EEPROM. Protection can be enhanced by ensuring that the Write Enable bit is normally cleared to zero when not writing. Also the Memory Pointer high byte register, MP1H or MP2H, could be normally cleared to zero as this would inhibit access to Sector 1 where the EEPROM control register exists. Although certainly not necessary, consideration might be given in the application program to the checking of the validity of new write data by a simple read back process.

When writing data the WR bit must be set high immediately after the WREN bit has been set high, to ensure the write cycle executes correctly. When erasing data the ER bit must be set high immediately after the EREN bit has been set high, to ensure the erase cycle executes correctly.The global interrupt bit EMI should also be cleared before a write or erase cycle is executed and then set again after a valid write or erase activation procedure has completed. Note that the device should not enter the IDLE or SLEEP mode until the EEPROM read/write/erase operation is totally complete. Otherwise, the EEPROM read/write/erase operation will fail.

Programming Examples

Reading a Data Byte from the EEPROM – polling method

```
MOV  A, 40H                 ; setup memory mointer lower byte MP1L
MOV  MP1L, A                ; MP1L points to EEC register
MOV  A, 01H                 ; setup memory pointer high byte MP1H
MOV  MP1H, A
CLR  IAR1.4                 ; clear MODE bit, select byte operatiom mode
MOV  A, EEPROM_ADRES_H      ; user defined high byte address
MOV  EEAH, A
MOV  A, EEPROM_ADRES_L      ; user defined low byte address
MOV  EEAL, A
SET  IAR1.1                 ; set RDEN bit, enable read operations
SET  IAR1.0                 ; start Read Cycle - set RD bit
BACK:
SZ   IAR1.0                 ; check for read cycle end
JMP  BACK
CLR  IAR1                   ; disable EEPROM read function
CLR  MP1H
MOV  A, EED                 ; move read data to register
MOV  READ_DATA, A
```

Reading a Data Page from the EEPROM – polling method

```
MOV  A, 40H                  ; set memory pointer low byte MP1L
MOV  MP1L, A                 ; MP1 points to EEC register
MOV  A, 01H                  ; set memory pointer high byte MP1H
MOV  MP1H, A
SET  IAR1.4                  ; set MODE bit, select page operation mode
MOV  A, EEPROM_ADRES_H       ; user defined high byte address
MOV  EEAH, A
MOV  A, EEPROM_ADRES_L       ; user defined low byte address
MOV  EEAL, A
SET  IAR1.1                  ; set RDEN bit, enable read operations
; ~~~~ The data length can be up to 16 bytes (Start) ~~~~
CALL READ
CALL READ
:
:
JMP PAGE_READ_FINISH
; ~~~~ The data length can be up to 16 bytes (End) ~~~~
READ:
SET  IAR1.0                  ; start Read Cycle - set RD bit
BACK:
SZ   IAR1.0                  ; check for read cycle end
JMP  BACK
MOV  A, EED                  ; move read data to register
MOV  READ_DATA, A
RET
:
PAGE_READ_FINISH:
CLR  IAR1                    ; disable EEPROM read function
CLR  MP1H
```

Erasing a Data Page to the EEPROM – polling method

```
MOV  A, 40H                  ; set memory pointer low byte MP1L
MOV  MP1L, A                 ; MP1 points to EEC register
MOV  A, 01H                  ; set memory pointer high byte MP1H
MOV  MP1H, A
SET  IAR1.4                  ; set MODE bit, select page operation mode
MOV  A, EEPROM_ADRES_H       ; user defined high byte address
MOV  EEAH, A
MOV  A, EEPROM_ADRES_L       ; user defined low byte address
MOV  EEAL, A
; ~~~~ The data length can be up to 16 bytes (Start) ~~~~
CALL WRITE_BUF
CALL WRITE_BUF
:
:
JMP  Erase_START
; ~~~~ The data length can be up to 16 bytes (End) ~~~~
WRITE_BUF:
MOV  A, EEPROM_DATA          ; user defined data, erase mode don't care data value
MOV  EED, A
RET
:
Erase_START:
CLR  EMI
SET  IAR1.6                  ; set EREN bit, enable write operations
SET  IAR1.5                  ; start Write Cycle - set ER bit - executed immediately
                             ; after setting EREN bit
SET  EMI
```

```
BACK:
SZ   IAR1.5                  ; check for write cycle end
JMP  BACK
CLR  MP1H
```

Writing a Data Byte to the EEPROM – polling method

```
MOV  A, 40H                  ; set memory pointer low byte MP1L
MOV  MP1L, A                 ; MP1 points to EEC register
MOV  A, 01H                  ; set memory pointer high byte MP1H
MOV  MP1H, A
CLR  IAR1.4                  ; clear MODE bit, select byte write mode
MOV  A, EEPROM_ADRES         ; user defined high byte address
MOV  EEAH, A
MOV  A, EEPROM_ADRES         ; user defined low byte address
MOV  EEAL, A
MOV  A, EEPROM_DATA          ; user defined data
MOV  EED, A
CLR  EMI
SET  IAR1.3                  ; set WREN bit, enable write operations
SET  IAR1.2                  ; start Write Cycle - set WR bit - executed immediately
                             ; after setting WREN bit
SET  EMI
BACK:
SZ   IAR1.2                  ; check for write cycle end
JMP  BACK
CLR  MP1H
```

Writing a Data Page to the EEPROM – polling method

```
MOV  A, 40H                  ; set memory pointer low byte MP1L
MOV  MP1L, A                 ; MP1 points to EEC register
MOV  A, 01H                  ; set memory pointer high byte MP1H
MOV  MP1H, A
SET  IAR1.4                  ; set MODE bit, select page operation mode
MOV  A, EEPROM_ADRES_H       ; user defined high byte address
MOV  EEAH, A
MOV  A, EEPROM_ADRES_L       ; user defined low byte address
MOV  EEAL, A
; ~~~~ The data length can be up to 16 bytes (Start) ~~~~
CALL WRITE_BUF
CALL WRITE_BUF
:
:
JMP WRITE_START
; ~~~~ The data length can be up to 16 bytes (End) ~~~~
WRITE_BUF:
MOV  A, EEPROM_DATA          ; user define data
MOV  EED, A
RET
:
WRITE_START:
CLR  EMI
SET  IAR1.3                  ; set WREN bit, enable write operations
SET  IAR1.2                  ; start Write Cycle - set WR bit - executed immediately
                             ; after setting WREN bit
SET  EMI
BACK:
SZ   IAR1.2                  ; check for write cycle end
JMP  BACK
CLR  MP1H
```

Oscillators

Various oscillator types offer the user a wide range of functions according to their various application requirements. The flexible features of the oscillator functions ensure that the best optimisation can be achieved in terms of speed and power saving. Oscillator selections and operation are selected through the relevant control registers.

Oscillator Overview

In addition to being the source of the main system clock the oscillators also provide clock sources for the Watchdog Timer and Time Base Interrupts. Two fully integrated internal oscillators, requiring no external components, are provided to form a wide range of both fast and slow system oscillators. The higher frequency oscillator provides higher performance but carry with it the disadvantage of higher power requirements, while the opposite is of course true for the lower frequency oscillator. With the capability of dynamically switching between fast and slow system clock, the device has the flexibility to optimize the performance/power ratio, a feature especially important in power sensitive portable applications.

Type	Name	Frequency
Internal High Speed RC	HIRC	8MHz
Internal Low Speed RC	LIRC	32kHz

Oscillator Types

System Clock Configurations

There are two oscillator sources, a high speed oscillator and a low speed oscillator. The high system clock is sourced from the internal 8MHz RC oscillator, HIRC. The low speed oscillator is the internal 32kHz RC oscillator, LIRC. Selecting whether the low or high speed oscillator is used as the system oscillator is implemented using the CKS2~CKS0 bits in the SCC register and as the system clock can be dynamically selected.

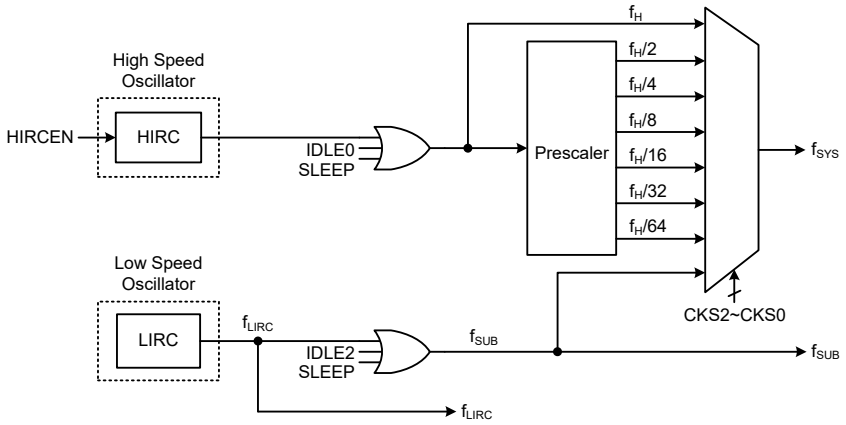

System Clock Configurations

Internal High Speed RC Oscillator – HIRC

The internal RC oscillator is a fully integrated system oscillator requiring no external components. The internal RC oscillator has a fixed frequency of 8MHz. Device trimming during the manufacturing process and the inclusion of internal frequency compensation circuits are used to ensure that the influence of the power supply voltage, temperature and process variations on the oscillation frequency are minimised.

Internal 32kHz Oscillator – LIRC

The Internal 32kHz System Oscillator is the low frequency oscillator. It is a fully integrated RC oscillator with a typical frequency of 32kHz, requiring no external components for its implementation. Device trimming during the manufacturing process and the inclusion of internal frequency compensation circuits are used to ensure that the influence of the power supply voltage, temperature and process variations on the oscillation frequency are minimised.

Operating Modes and System Clocks

Present day applications require that their microcontrollers have high performance but often still demand that they consume as little power as possible, conflicting requirements that are especially true in battery powered portable applications. The fast clocks required for high performance will by their nature increase current consumption and of course vice-versa lower speed clocks reduce current consumption. As Holtek has provided the device with both high and low speed clock sources and the means to switch between them dynamically, the user can optimise the operation of their microcontroller to achieve the best performance/power ratio.

System Clocks

The device has many different clock sources for both the CPU and peripheral function operation. By providing the user with a wide range of clock selections using register programming, a clock system can be configured to obtain maximum application performance.

The main system clock, can come from either a high frequency, f_H, or low frequency, f_{SUB}, source, and is selected using the CKS2~CKS0 bits in the SCC register. The high speed system clock is sourced from the HIRC oscillator. The low speed system clock source is sourced from the LIRC oscillator. The other choice, which is a divided version of the high speed system oscillator has a range of $f_H/2$~$f_H/64$.

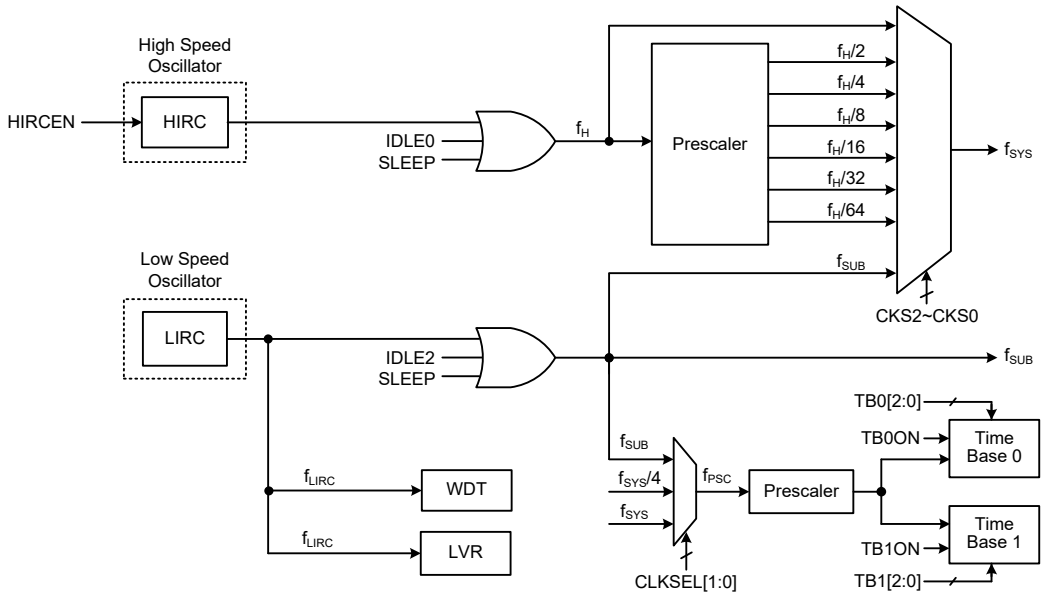

Device Clock Configurations

Note: When the system clock source f_{SYS} is switched to f_{SUB} from f_H, the high speed oscillation can be stopped to conserve the power or continue to oscillate to provide the clock source, f_H~$f_H/64$, for peripheral circuits to use, which is determined by configuring the corresponding high speed oscillator enable control bit.

System Operation Modes

There are six different modes of operation for the microcontroller, each one with its own special characteristics and which can be chosen according to the specific performance and power requirements of the application. There are two modes allowing normal operation of the microcontroller, the FAST Mode and SLOW Mode. The remaining four modes, the SLEEP, IDLE0, IDLE1 and IDLE2 Mode are used when the microcontroller CPU is switched off to conserve power.

Operation Mode	CPU	Register Setting			f_{SYS}	f_H	f_{SUB}	f_{LIRC}
		FHIDEN	FSIDEN	CKS2~CKS0				
FAST	On	x	x	000~110	f_H~f_H/64	On	On	On
SLOW	On	x	x	111	f_{SUB}	On/Off (1)	On	On
IDLE0	Off	0	1	000~110	Off	Off	On	On
				111	On			
IDLE1	Off	1	1	xxx	On	On	On	On
IDLE2	Off	1	0	000~110	On	On	Off	On
				111	Off			
SLEEP	Off	0	0	xxx	Off	Off	Off	On/Off (2)

"x": don't care

Note: 1. The f_H clock will be switched on or off by configuring the corresponding oscillator enable bit in the SLOW mode.
2. The f_{LIRC} clock will be switched on or off which is controlled by the WDT function being enabled or disabled in the SLEEP mode.

FAST Mode

This is one of the main operating modes where the microcontroller has all of its functions operational and where the system clock is provided by the internal high speed oscillator. This mode operates allowing the microcontroller to operate normally with a clock source which will come from the HIRC oscillator. The high speed oscillator will however first be divided by a ratio ranging from 1 to 64, the actual ratio being selected by the CKS2~CKS0 bits in the SCC register. Although a high speed oscillator is used, running the microcontroller at a divided clock ratio reduces the operating current.

SLOW Mode

This is also a mode where the microcontroller operates normally although now with a slower speed clock source. The clock source used will be from f_{SUB}. The f_{SUB} clock is derived from the LIRC oscillator.

SLEEP Mode

The SLEEP Mode is entered when a HALT instruction is executed and when the FHIDEN and FSIDEN bits in the SCC register are both low. In the SLEEP mode the CPU will be stopped. The f_{SUB} clock provided to the peripheral function will also be stopped. However the f_{LIRC} clock will continue to operate if the WDT function is enabled.

IDLE0 Mode

The IDLE0 Mode is entered when a HALT instruction is executed and when the FHIDEN bit in the SCC register is low and the FSIDEN bit in the SCC register is high. In the IDLE0 Mode the CPU will be switched off but the low speed oscillator will be on to drive some peripheral functions.

IDLE1 Mode

The IDLE1 Mode is entered when a HALT instruction is executed and when the FHIDEN and FSIDEN bits in the SCC register are both high. In the IDLE1 Mode the CPU will be switched off but both the high and low speed oscillators will be on to provide a clock source to keep some peripheral functions operational.

IDLE2 Mode

The IDLE2 Mode is entered when a HALT instruction is executed and when the FHIDEN bit in the SCC register is high and the FSIDEN bit in the SCC register is low. In the IDLE2 Mode the CPU will be switched off but the high speed oscillator will be on to provide a clock source to keep some peripheral functions operational.

Control Registers

The SCC and HIRCC registers are used to control the system clock and the HIRC oscillator configurations.

Register Name	Bit							
	7	6	5	4	3	2	1	0
SCC	CKS2	CKS1	CKS0	—	—	—	FHIDEN	FSIDEN
HIRCC	—	—	—	—	—	—	HIRCF	HIRCEN

System Operating Mode Control Register List

- **SCC Register**

Bit	7	6	5	4	3	2	1	0
Name	CKS2	CKS1	CKS0	—	—	—	FHIDEN	FSIDEN
R/W	R/W	R/W	R/W	—	—	—	R/W	R/W
POR	0	0	0	—	—	—	0	0

Bit 7~5 **CKS2~CKS0**: System clock selection
000: f_H
001: $f_H/2$
010: $f_H/4$
011: $f_H/8$
100: $f_H/16$
101: $f_H/32$
110: $f_H/64$
111: f_{SUB}

These three bits are used to select which clock is used as the system clock source. In addition to the system clock source directly derived from f_H or f_{SUB}, a divided version of the high speed system oscillator can also be chosen as the system clock source.

Bit 4~2 Unimplemented, read as "0"

Bit 1 **FHIDEN**: High Frequency oscillator control when CPU is switched off
0: Disable
1: Enable

This bit is used to control whether the high speed oscillator is activated or stopped when the CPU is switched off by executing a "HALT" instruction.

Bit 0 **FSIDEN**: Low Frequency oscillator control when CPU is switched off
0: Disable
1: Enable

This bit is used to control whether the low speed oscillator is activated or stopped when the CPU is switched off by executing a "HALT" instruction.

Note: A certain delay is required before the relevant clock is successfully switched to the target clock source after any clock switching setup using the CKS2~CKS0 bits. A proper delay time must be arranged before executing the following operations which require immediate reaction with the target clock source.

Clock switching delay time=$4\times t_{SYS}+[0\sim(1.5\times t_{Curr.}+0.5\times t_{Tar.})]$, where $t_{Curr.}$ indicates the current clock period, t_{Tar}. Indicates the target clock period and t_{SYS} indicates the current sytem clock period.

• **HIRCC Register**

Bit	7	6	5	4	3	2	1	0
Name	—	—	—	—	—	—	HIRCF	HIRCEN
R/W	—	—	—	—	—	—	R	R/W
POR	—	—	—	—	—	—	0	1

Bit 7~2 Unimplemented, read as "0"

Bit 1 **HIRCF**: HIRC oscillator stable flag
0: Unstable
1: Stable
This bit is used to indicate whether the HIRC oscillator is stable or not. When the HIRCEN bit is set to 1 to enable the HIRC oscillator, the HIRCF bit will first be cleared to 0 and then set to 1 after the HIRC oscillator is stable.

Bit 0 **HIRCEN**: HIRC oscillator enable control
0: Disable
1: Enable

Operating Mode Switching

The device can switch between operating modes dynamically allowing the user to select the best performance/power ratio for the present task in hand. In this way microcontroller operations that do not require high performance can be executed using slower clocks thus requiring less operating current and prolonging battery life in portable applications.

In simple terms, Mode Switching between the FAST Mode and SLOW Mode is executed using the CKS2~CKS0 bits in the SCC register while Mode Switching from the FAST/SLOW Modes to the SLEEP/IDLE Modes is executed via the HALT instruction. When a HALT instruction is executed, whether the device enters the IDLE Mode or the SLEEP Mode is determined by the condition of the FHIDEN and FSIDEN bits in the SCC register.

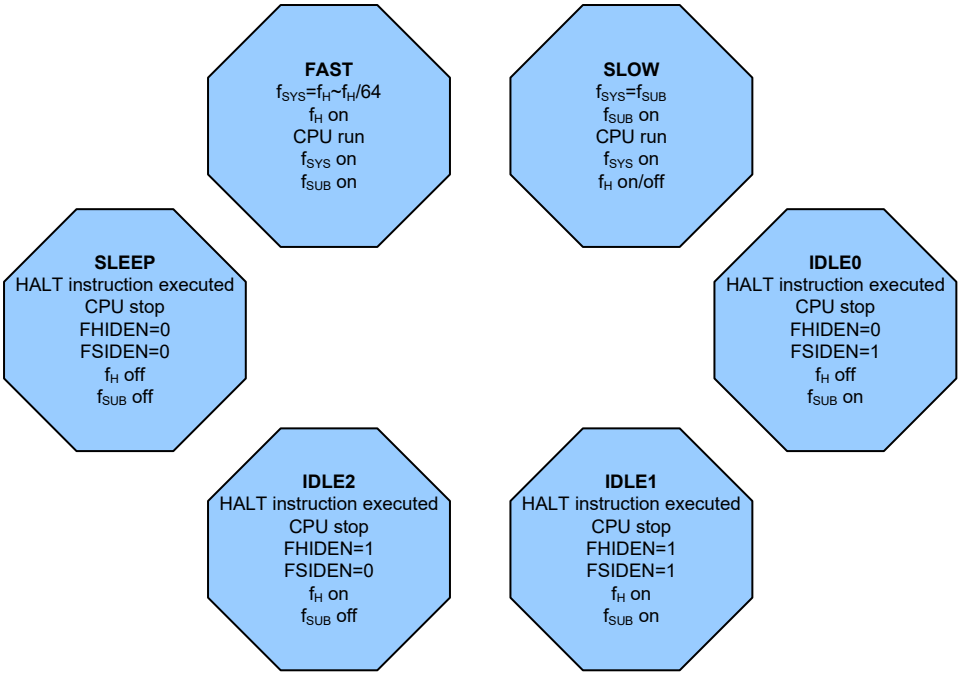

FAST Mode to SLOW Mode Switching

When running in the FAST Mode, which uses the high speed system oscillator, and therefore consumes more power, the system clock can switch to run in the SLOW Mode by setting the CKS2~CKS0 bits to "111" in the SCC register. This will then use the low speed system oscillator which will consume less power. Users may decide to do this for certain operations which do not require high performance and can subsequently reduce power consumption.

The SLOW Mode is sourced from the LIRC oscillator and therefore requires this oscillator to be stable before full mode switching occurs.

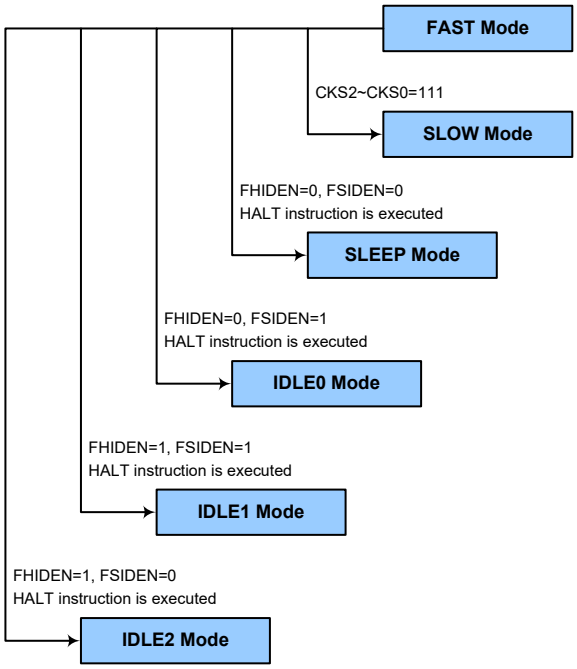

SLOW Mode to FAST Mode Switching

In SLOW mode the system clock is derived from f_{SUB}. When system clock is switched back to the FAST mode from f_{SUB}, the CKS2~CKS0 bits should be set to "000"~"110" and then the system clock will respectively be switched to f_H~f_H/64.

However, if f_H is not used in SLOW mode and thus switched off, it will take some time to re-oscillate and stabilise when switching to the FAST mode from the SLOW Mode. This is monitored using the HIRCF bit in the HIRCC register. The time duration required for the high speed system oscillator stabilization is specified in the System Start Up Time Characteristics.

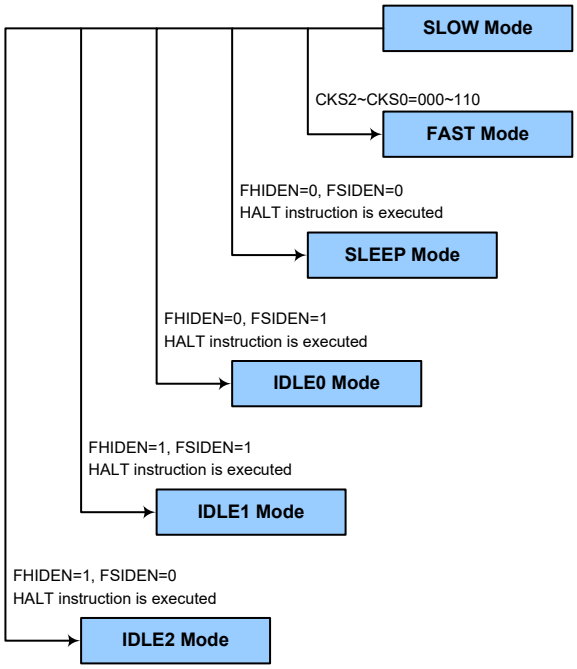

Entering the SLEEP Mode

There is only one way for the device to enter the SLEEP Mode and that is to execute the "HALT" instruction in the application program with both the FHIDEN and FSIDEN bits in the SCC register equal to "0". When this instruction is executed under the conditions described above, the following will occur:

- The system clock will be stopped and the application program will stop at the "HALT" instruction.
- The Data Memory contents and registers will maintain their present condition.
- The I/O ports will maintain their present conditions.
- In the status register, the Power Down flag PDF will be set, and WDT timeout flag TO will be cleared.
- The WDT will be cleared and resume counting if the WDT function is enabled. If the WDT function is disabled, the WDT will be cleared and then stopped.

Entering the IDLE0 Mode

There is only one way for the device to enter the IDLE0 Mode and that is to execute the "HALT" instruction in the application program with the FHIDEN bit in the SCC register equal to "0" and the FSIDEN bit in the SCC register equal to "1". When this instruction is executed under the conditions described above, the following will occur:

- The f_H clock will be stopped and the application program will stop at the "HALT" instruction, but the f_{SUB} clock will be on.
- The Data Memory contents and registers will maintain their present condition.
- The I/O ports will maintain their present conditions.
- In the status register, the Power Down flag PDF will be set, and WDT timeout flag TO will be cleared.
- The WDT will be cleared and resume counting if the WDT function is enabled. If the WDT function is disabled, the WDT will be cleared and then stopped.

Entering the IDLE1 Mode

There is only one way for the device to enter the IDLE1 Mode and that is to execute the "HALT" instruction in the application program with both the FHIDEN and FSIDEN bits in the SCC register equal to "1". When this instruction is executed under the conditions described above, the following will occur:

- The f_H and f_{SUB} clocks will be on but the application program will stop at the "HALT" instruction.
- The Data Memory contents and registers will maintain their present condition.
- The I/O ports will maintain their present conditions.
- In the status register, the Power Down flag PDF will be set, and WDT timeout flag TO will be cleared.
- The WDT will be cleared and resume counting if the WDT function is enabled. If the WDT function is disabled, the WDT will be cleared and then stopped.

Entering the IDLE2 Mode

There is only one way for the device to enter the IDLE2 Mode and that is to execute the "HALT" instruction in the application program with the FHIDEN bit in the SCC register equal to "1" and the FSIDEN bit in the SCC register equal to "0". When this instruction is executed under the conditions described above, the following will occur:

- The f_H clock will be on but the f_{SUB} clock will be off and the application program will stop at the "HALT" instruction.
- The Data Memory contents and registers will maintain their present condition.
- The I/O ports will maintain their present conditions.
- In the status register, the Power Down flag PDF will be set, and WDT timeout flag TO will be cleared.
- The WDT will be cleared and resume counting if the WDT function is enabled. If the WDT function is disabled, the WDT will be cleared and then stopped.

Standby Current Considerations

As the main reason for entering the SLEEP or IDLE Mode is to keep the current consumption of the device to as low a value as possible, perhaps only in the order of several micro-amps except in the IDLE1 and IDLE2 Mode, there are other considerations which must also be taken into account by the circuit designer if the power consumption is to be minimised. Special attention must be made to the I/O pins on the device. All high-impedance input pins must be connected to either a fixed high or low level as any floating input pins could create internal oscillations and result in increased current consumption. This also applies to the device which has different package types, as there may be unbonded pins. These must either be setup as outputs or if setup as inputs must have pull-high resistors connected.

Care must also be taken with the loads, which are connected to I/O pins, which are setup as outputs. These should be placed in a condition in which minimum current is drawn or connected only to external circuits that do not draw current, such as other CMOS inputs. Also note that additional standby current will also be required if the LIRC oscillator has been enabled.

In the IDLE1 and IDLE2 Mode the high speed oscillator is on, if the peripheral function clock source is derived from the high speed oscillator, the additional standby current will also be perhaps in the order of several hundred micro-amps.

Wake-up

To minimise power consumption the device can enter the SLEEP or any IDLE Mode, where the CPU will be switched off. However, when the device is woken up again, it will take a considerable time for the original system oscillator to restart, stabilise and allow normal operation to resume.

After the system enters the SLEEP or IDLE Mode, it can be woken up from one of various sources listed as follows:

- An external pin reset
- An external falling edge on Port A (except the PA2 pin)
- A system interrupt
- A WDT overflow

If the system is woken up by an external $\overline{RES}$ pin reset, the device will experience a full system reset, however, if the device is woken up by a WDT overflow, a Watchdog Timer reset will be initiated. Although both of these wake-up methods will initiate a reset operation, the actual source of the wake-up can be determined by examining the TO and PDF flags. The PDF flag is cleared by a system power-up or executing the clear Watchdog Timer instructions and is set when executing the "HALT" instruction. The TO flag is set if a WDT time-out occurs, and causes a wake-up that only resets the Program Counter and Stack Pointer, the other flags remain in their original status.

Each pin on Port A can be setup using the PAWU register to permit a negative transition on the pin to wake up the system. When a Port A pin wake-up occurs, the program will resume execution at the instruction following the "HALT" instruction.If the system is woken up by an interrupt, then two possible situations may occur. The first is where the related interrupt is disabled or the interrupt is enabled but the stack is full, in which case the program will resume execution at the instruction following the "HALT" instruction. In this situation, the interrupt which woke up the device will not be immediately serviced, but will rather be serviced later when the related interrupt is finally enabled or when a stack level becomes free. The other situation is where the related interrupt is enabled and the stack is not full, in which case the regular interrupt response takes place. If an interrupt request flag is set high before entering the SLEEP or IDLE Mode, the wake-up function of the related interrupt will be disabled.

Watchdog Timer

The Watchdog Timer is provided to prevent program malfunctions or sequences from jumping to unknown locations, due to certain uncontrollable external events such as electrical noise.

Watchdog Timer Clock Source

The Watchdog Timer clock source is provided by the internal clock, f_{LIRC}, which is sourced from the LIRC oscillator. The LIRC internal oscillator has an approximate frequency of 32kHz and this specified internal clock period can vary with V_{DD}, temperature and process variations. The Watchdog Timer source clock is then subdivided by a ratio of 2^8 to 2^{18} to give longer timeouts, the actual value being chosen using the WS2~WS0 bits in the WDTC register.

Watchdog Timer Control Register

A single register, WDTC, controls the required time-out period as well as Watchdog Timer the enable/disable and the MCU reset operation.

• **WDTC Register**

Bit	7	6	5	4	3	2	1	0
Name	WE4	WE3	WE2	WE1	WE0	WS2	WS1	WS0
R/W	R/W	R/W	R/W	R/W	R/W	R/W	R/W	R/W
POR	0	1	0	1	0	0	1	1

Bit 7~3 **WE4~WE0**: WDT function enable control
10101: Disable
01010: Enable
Other values: Reset MCU
When these bits are changed to any other values due to environmental noise the microcontroller will be reset; this reset operation will be activated after a delay time, t_{SRESET}, and the WRF bit in the RSTFC register will be set high.

Bit 2~0 **WS2~WS0**: WDT time-out period selection
000: $2^8/f_{LIRC}$
001: $2^{10}/f_{LIRC}$
010: $2^{12}/f_{LIRC}$
011: $2^{14}/f_{LIRC}$
100: $2^{15}/f_{LIRC}$
101: $2^{16}/f_{LIRC}$
110: $2^{17}/f_{LIRC}$
111: $2^{18}/f_{LIRC}$
These three bits determine the division ratio of the watchdog timer source clock, which in turn determines the time-out period.

• **RSTFC Register**

Bit	7	6	5	4	3	2	1	0
Name	—	—	—	—	RSTF	LVRF	LRF	WRF
R/W	—	—	—	—	R/W	R/W	R/W	R/W
POR	—	—	—	—	0	x	0	0

"x": unknown

Bit 7~4 Unimplemented, read as "0"

Bit 3 **RSTF**: Reset control register software reset flag
Refer to the $\overline{RES}$ Pin Reset section.

Bit 2 **LVRF**: LVR function reset flag
Refer to the Low Voltage Reset section.

Bit 1 **LRF**: LVRC register software reset flag
Refer to the Low Voltage Reset section.

Bit 0 **WRF**: WDT control register software reset flag
0: Not occurred
1: Occurred
This bit is set to 1 by the WDT control register software reset and cleared by the application program. This bit can only be cleared to zero by application program.

Watchdog Timer Operation

The Watchdog Timer operates by providing a device reset when its timer overflows. This means that in the application program and during normal operation the user has to strategically clear the Watchdog Timer before it overflows to prevent the Watchdog Timer from executing a reset. This is done using the clear watchdog instruction. If the program malfunctions for whatever reason, jumps to an unknown location, or enters an endless loop, the clear instruction will not be executed in the correct manner, in which case the Watchdog Timer will overflow and reset the device. There are five bits, WE4~WE0, in the WDTC register to offer the Watchdog Timer enable/disable control and the MCU reset. The WDT function will be enabled when the WE4~WE0 bits are set to a value of 01010B while the WDT function will be disabled if the WE4~WE0 bits are equal to 10101B. If the WE4~WE0 bits are set to any other values rather than 01010B and 10101B, it will reset the device after a delay time, t_{SRESET}. After power on these bits will have a value of 01010B.

WE4~WE0 Bits	WDT Function
10101B	Disable
01010B	Enable
Any other value	Reset MCU

Watchdog Timer Function Control

Under normal program operation, a Watchdog Timer time-out will initialise a device reset and set the status bit TO. However, if the system is in the SLEEP or IDLE Mode, when a Watchdog Timer time-out occurs, the TO bit in the status register will be set and only the Program Counter and Stack Pointer will be reset. Four methods can be adopted to clear the contents of the Watchdog Timer. The first is a WDTC register software reset, which means a certain value except 01010B and 10101B written into the WE4~WE0 bits, the second is using the Watchdog Timer software clear instruction and the third is via a HALT instruction. The last is an external hardware reset, which means a low level on the external reset pin if the external reset pin is selected by the RSTC register.

There is only one method of using software instruction to clear the Watchdog Timer. That is to use the single "CLR WDT" instruction to clear the WDT contents.

The maximum time out period is when the 2^{18} division ratio is selected. As an example, with a 32kHz LIRC oscillator as its source clock, this will give a maximum watchdog period of around 8 seconds for the 2^{18} division ratio and a minimum timeout of 8ms for the 2^8 division ration.

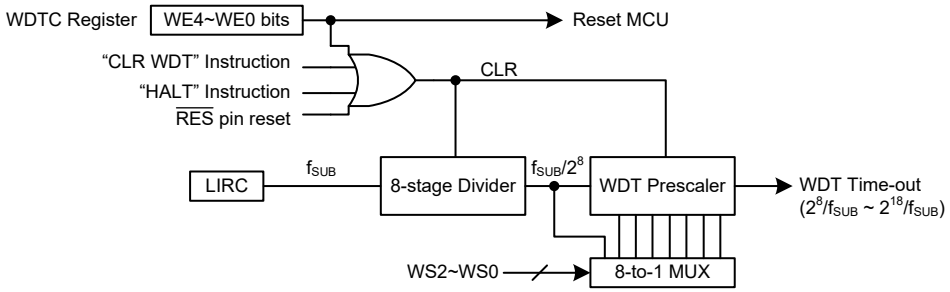

Watchdog Timer

Reset and Initialisation

A reset function is a fundamental part of any microcontroller ensuring that the device can be set to some predetermined condition irrespective of outside parameters. The most important reset condition is after power is first applied to the microcontroller. In this case, internal circuitry will ensure that the microcontroller, after a short delay, will be in a well defined state and ready to execute the first program instruction. After this power-on reset, certain important internal registers will be set to defined states before the program commences. One of these registers is the Program Counter, which will be reset to zero forcing the microcontroller to begin program execution from the lowest Program Memory address.

In addition to the power-on reset, situations may arise where it is necessary to forcefully apply a reset condition when the microcontroller is already running, the $\overline{RES}$ line is forcefully pulled low. In such a case, known as a normal operation reset, some of the microcontroller registers remain unchanged allowing the microcontroller to preceed with normal operation after the reset line is allowed to return high.

Another reset exists in the form of a Low Voltage Reset, LVR, where a full reset, similar to the $\overline{RES}$ reset is implemented in situations where the power supply voltage falls below a certain threshold. Another type of reset is when the Watchdog Timer overflows and resets the microcontroller. All types of reset operations result in different register conditions being setup.

Reset Functions

There are several ways in which a microcontroller reset can occur, through events occurring internally.

Power-on Reset

The most fundamental and unavoidable reset is the one that occurs after power is first applied to the microcontroller. As well as ensuring that the Program Memory begins execution from the first memory address, a power-on reset also ensures that certain other registers are preset to known conditions. All the I/O port and port control registers will power up in a high condition ensuring that all pins will be first set to inputs.

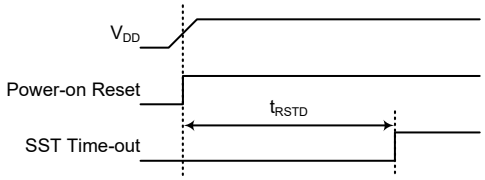

Power-On Reset Timing Chart

$\overline{RES}$ Pin Reset

The external reset pin is a dedicated pin of which a high to low transition will reset the microcontroller. As the reset pin is shared with I/O pins, the reset function must be selected using the control register, RSTC. Although the microcontroller has an internal RC reset function, if the V_{DD} power supply rise time is not fast enough or does not stabilise quickly at power-on, the internal reset function may be incapable of providing proper reset operation. For this reason it is recommended that an external RC network is connected to the $\overline{RES}$ pin, whose additional time delay will ensure that the $\overline{RES}$ pin remains low for an extended period to allow the power supply to stabilise. During this time delay, normal operation of the microcontroller will be inhibited. After the $\overline{RES}$ line reaches a certain voltage value, the reset delay time, t_{RSTD}, is invoked to provide an extea delay time after which the microcontroller will begin normal operation. The abbreviation SST in the figures stands for System Start-up Time.

For most applications a resistor connected between VDD and the $\overline{RES}$ line and a capacitor connected betweeb VSS and the $\overline{RES}$ pin will provide a suitable external reset circuit. Any wiring connected to the $\overline{RES}$ pin should be kept as short as possible to minimise any stray noise interference.

For applications that operate within an environment where more noise is present the Enhanced Reset Circuit shown is recommended.

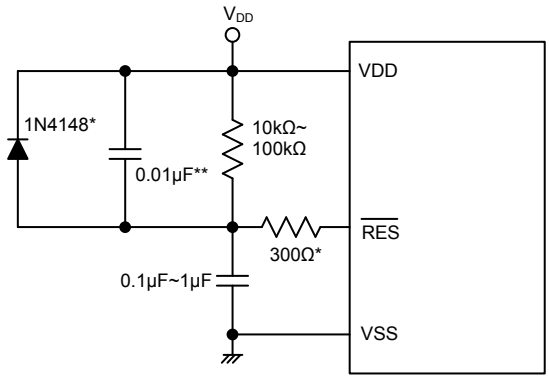

Note: "*" It is recommended that this component is added for added ESD protection.
"**" It is recommended that this component is added in environments where power line noise is significant.

External $\overline{RES}$ Circuit

Pulling the $\overline{RES}$ pin low using external hardware will also execute a device reset. In this case, as in the case of other resets, the Program Counter will reset to zero and program execution initiated from this point.

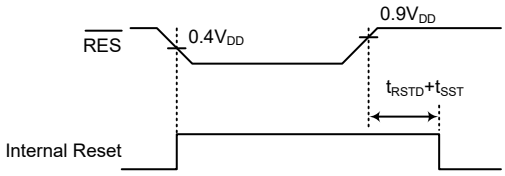

$\overline{RES}$ Reset Timing Chart

There is an internal reset control register, RSTC, which is used to select the external $\overline{RES}$ pin function and provide a reset when the device operates abnormally due to the environmental noise interference. If the content of the RSTC register is set to any value other than 01010101B or 10101010B, it will reset the device after a delay time, t_{SRESET}. After power on the register will have a value of 10101010B.

RSTC7~RSTC0 Bits	Reset Function
01010101B	General purpose output pin function
10101010B	$\overline{RES}$ pin
Any other value	Reset MCU

Internal Reset Function Control

• **RSTC Register**

Bit	7	6	5	4	3	2	1	0
Name	RSTC7	RSTC6	RSTC5	RSTC4	RSTC3	RSTC2	RSTC1	RSTC0
R/W	R/W	R/W	R/W	R/W	R/W	R/W	R/W	R/W
POR	1	0	1	0	1	0	1	0

Bit 7~0 **RSTC7~RSTC0**: Reset function control
01010101: General purpose output pin function, PA2OEN=1
10101010: $\overline{RES}$ pin, PA2OEN=0
Other values: Reset MCU

If these bits are changed due to adverse environmental conditions, the microcontroller will be reset. The reset operation will be activated after a delay time, t_{SRESET} and the RSTF bit in the RSTFC register will be set to 1.

All resets will reset this register to POR value except the WDT time-out hardware warm reset. Note that if the register is set to 10101010 to set the $\overline{RES}$ pin, this configuration has higher priority than other related pin-shared controls.

• **RSTFC Register**

Bit	7	6	5	4	3	2	1	0
Name	—	—	—	—	RSTF	LVRF	LRF	WRF
R/W	—	—	—	—	R/W	R/W	R/W	R/W
POR	—	—	—	—	0	x	0	0

"x": unknown

Bit 7~4 Unimplemented, read as "0"

Bit 3 **RSTF**: Reset control register software reset flag
0: Not occurred
1: Occurred

This bit is set to 1 by the RSTC control register software reset and cleared by the application program. This bit can only be cleared to zero by application program.

Bit 2 **LVRF**: LVR function reset flag
Refer to the Low Voltage Reset section.

Bit 1 **LRF**: LVRC register software reset flag
Refer to the Low Voltage Reset section.

Bit 0 **WRF**: WDTC register software reset flag
Refer to the Watchdog Timer Control Register section.

Low Voltage Reset – LVR

The microcontroller contains a low voltage reset circuit in order to monitor the supply voltage of the device and provides an MCU reset when the value falls below a certain predefined level.

If the supply voltage of the device drops to within a range of 0.9V~V_{LVR} such as might occur when changing the battery in battery powered applications, the LVR will automatically reset the device internally and the LVRF bit in the RSTFC register will also be set to 1. For a valid LVR signal, a low supply voltage, i.e., a voltage in the range between 0.9V~V_{LVR} must exist for a time greater than that specified by t_{LVR} in the LVR Electrical Characteristics. If the low supply voltage state does not exceed this value, the LVR will ignore the low supply voltage and will not perform a reset function. The actual t_{LVR} value can be selected by the TLVR1~TLVR0 bits in the TLVRC register. If the LVS7~LVS0 bits are set to 01011010B, the LVR function is enabled with a fixed V_{LVR} of 2.1V. If the LVS7~LVS0 bits are set to 10100101B, the LVR function is disabled. If the LVS7~LVS0 bits are changed to any other values by environmental noise, the LVR will reset the device after a delay time, t_{SRESET}. When this happens, the LRF bit in the RSTFC register will be set to 1. After power-on the register will have the value of 01011010B. Note that the LVR function will be automatically disabled when the device enters the SLEEP or IDLE mode.

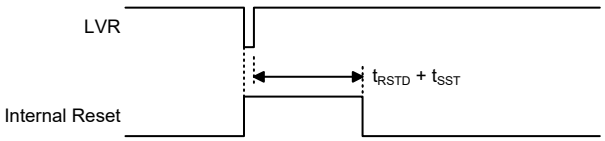

Low Voltage Reset Timing Chart

- **LVRC Register**

Bit	7	6	5	4	3	2	1	0
Name	LVS7	LVS6	LVS5	LVS4	LVS3	LVS2	LVS1	LVS0
R/W	R/W	R/W	R/W	R/W	R/W	R/W	R/W	R/W
POR	0	1	0	1	1	0	1	0

Bit 7~0 **LVS7~LVS0**: LVR voltage select
01011010: 2.1V
10100101: LVR disable
Other values: Generates an MCU reset

When an actual low voltage condition as specified above occurs, an MCU reset will be generated. The reset operation will be activated after the low voltage condition keeps more than a t_{LVR} time. In this situation the register contents will remain the same after such a reset occurs.

Any register value, other than 01011010B and 10100101B values, will also result in the generation of an MCU reset. The reset operation will be activated after a delay time, t_{SRESET}. However in this situation the register contents will be reset to the POR value.

- **TLVRC Register**

Bit	7	6	5	4	3	2	1	0
Name	—	—	—	—	—	—	TLVR1	TLVR0
R/W	—	—	—	—	—	—	R/W	R/W
POR	—	—	—	—	—	—	0	1

Bit 7~2 Unimplemented, read as “0”

Bit 1~0 **TLVR1~TLVR0**: Minimum low voltage width to reset time (t_{LVR})
00: (7~8)×t_{LIRC}
01: (31~32)×t_{LIRC}
10: (63~64)×t_{LIRC}
11: (127~128)×t_{LIRC}

- **RSTFC Register**

Bit	7	6	5	4	3	2	1	0
Name	—	—	—	—	RSTF	LVRF	LRF	WRF
R/W	—	—	—	—	R/W	R/W	R/W	R/W
POR	—	—	—	—	0	x	0	0

“x”: unknown

Bit 7~4 Unimplemented, read as “0”

Bit 3 **RSTF**: Reset control register software reset flag
Refer to the $\overline{RES}$ Pin Reset section.

Bit 2 **LVRF**: LVR function reset flag
0: Not occurred
1: Occurred

This bit is set to 1 when a specific low voltage reset condition occurs. This bit can only be cleared to zero by application program.

Bit 1 **LRF**: LVRC register software reset flag
0: Not occurred
1: Occurred
This bit is set high if the LVRC register contains any non-defined LVR voltage register values. This in effect acts like a software reset function. This bit can only be cleared to zero by application program.

Bit 0 **WRF**: WDTC register software reset flag
Refer to the Watchdog Timer Control Register section.

IAP Reset

When a specific value of "55H" is written into the FC1 register, a reset signal will be generated to reset the whole device. Refer to the In Application Programming section for more associated details.

Watchdog Time-out Reset during Normal Operation

The Watchdog time-out Reset during normal operation is the same as the LVR Reset except that the Watchdog time-out flag TO will be set to "1".

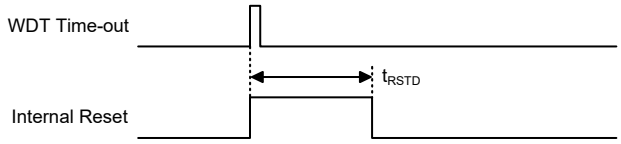

WDT Time-out Reset during Normal Operation Timing Chart

Watchdog Time-out Reset during SLEEP or IDLE Mode

The Watchdog time-out Reset during SLEEP or IDLE Mode is a little different from other kinds of reset. Most of the conditions remain unchanged except that the Program Counter and the Stack Pointer will be cleared to "0" and the TO flag will be set to "1". Refer to the System Start Up Time Characteristics for t_{SST} details.

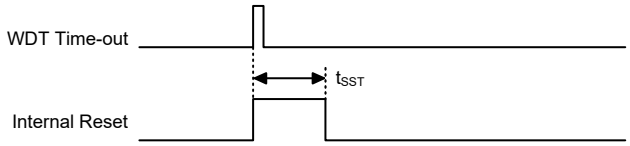

WDT Time-out Reset during SLEEP or IDLE Mode Timing Chart

Reset Initial Conditions

The different types of reset described affect the reset flags in different ways. These flags, known as PDF and TO are located in the status register and are controlled by various microcontroller operations, such as the SLEEP or IDLE Mode function or Watchdog Timer. The reset flags are shown in the table:

TO	PDF	Reset Conditions
0	0	Power-on reset
u	u	$\overline{RES}$ or LVR reset during FAST or SLOW Mode operation
1	u	WDT time-out reset during FAST or SLOW Mode operation
1	1	WDT time-out reset during IDLE or SLEEP Mode operation

"u": unchanged

The following table indicates the way in which the various components of the microcontroller are affected after a power-on reset occurs.

Item	Condition After Reset
Program Counter	Reset to zero
Interrupts	All interrupts will be disabled
WDT, Time Bases	Cleared after reset, WDT begins counting
Timer Modules	Timer Modules will be turned off
Input/Output Ports	I/O ports will be setup as inputs
Stack Pointer	Stack Pointer will point to the top of the stack

The different kinds of resets all affect the internal registers of the microcontroller in different ways. To ensure reliable continuation of normal program execution after a reset occurs, it is important to know what condition the microcontroller is in after a particular reset occurs. The following table describes how each type of reset affects the microcontroller internal registers. Note that where more than one package type exists the table will reflect the situation for the larger package type.

Register	Power-On Reset	$\overline{\text{RES}}$ Reset (Normal Operation)	$\overline{\text{RES}}$ Reset (IDLE/SLEEP)	WDT Time-out (Normal Operation)	WDT Time-out (IDLE/SLEEP)
IAR0	0000 0000	0000 0000	0000 0000	0000 0000	uuuu uuuu
MP0	0000 0000	0000 0000	0000 0000	0000 0000	uuuu uuuu
IAR1	0000 0000	0000 0000	0000 0000	0000 0000	uuuu uuuu
MP1L	0000 0000	0000 0000	0000 0000	0000 0000	uuuu uuuu
MP1H	0000 0000	0000 0000	0000 0000	0000 0000	uuuu uuuu
ACC	xxxx xxxx	uuuu uuuu	uuuu uuuu	uuuu uuuu	uuuu uuuu
PCL	0000 0000	0000 0000	0000 0000	0000 0000	0000 0000
TBLP	xxxx xxxx	uuuu uuuu	uuuu uuuu	uuuu uuuu	uuuu uuuu
TBLH	xxxx xxxx	uuuu uuuu	uuuu uuuu	uuuu uuuu	uuuu uuuu
TBHP	---x xxxx	---u uuuu	---u uuuu	---u uuuu	-uuu uuuu
STATUS	xx00 xxxx	uuuu uuuu	uu01 uuuu	uu1u uuuu	uu11 uuuu
IAR2	0000 0000	0000 0000	0000 0000	0000 0000	uuuu uuuu
MP2L	0000 0000	0000 0000	0000 0000	0000 0000	uuuu uuuu
MP2H	0000 0000	0000 0000	0000 0000	0000 0000	uuuu uuuu
RSTFC	---- 0x00	---- uuuu	---- uuuu	---- uuuu	---- uuuu
LVRC	0101 1010	0101 1010	0101 1010	0101 1010	uuuu uuuu
TLVRC	---- --01	---- --01	---- --01	---- --01	---- --uu
SCC	000- --00	000- --00	000- --00	000- --00	uuu- --uu
HIRCC	---- --01	---- --01	---- --01	---- --01	---- --uu
PA	1111 1111	1111 1111	1111 1111	1111 1111	uuuu uuuu
PAC	1111 1-11	1111 1-11	1111 1-11	1111 1-11	uuuu u-uu
PAPU	0000 0-00	0000 0-00	0000 0-00	0000 0-00	uuuu u-uu
PAWU	0000 0-00	0000 0-00	0000 0-00	0000 0-00	uuuu u-uu
PB	1111 1111	1111 1111	1111 1111	1111 1111	uuuu uuuu
PBC	1111 1111	1111 1111	1111 1111	1111 1111	uuuu uuuu
PBPU	0000 0000	0000 0000	0000 0000	0000 0000	uuuu uuuu
PC	1111 1111	1111 1111	1111 1111	1111 1111	uuuu uuuu
PCC	1111 1111	1111 1111	1111 1111	1111 1111	uuuu uuuu
PCPU	0000 0000	0000 0000	0000 0000	0000 0000	uuuu uuuu
PD	---- -111	---- -111	---- -111	---- -111	---- -uuu
PDC	---- -111	---- -111	---- -111	---- -111	---- -uuu
PDPU	---- -000	---- -000	---- -000	---- -000	---- -uuu
PAS0	00-- 00--	00-- 00--	00-- 00--	00-- 00--	uu-- uu--
PAS1	--00 0000	--00 0000	--00 0000	--00 0000	--uu uuuu

Register	Power-On Reset	$\overline{\text{RES}}$ Reset (Normal Operation)	$\overline{\text{RES}}$ Reset (IDLE/SLEEP)	WDT Time-out (Normal Operation)	WDT Time-out (IDLE/SLEEP)
PBS0	0000 0000	0000 0000	0000 0000	0000 0000	uuuu uuuu
PBS1	0000 0000	0000 0000	0000 0000	0000 0000	uuuu uuuu
PCS0	0000 0000	0000 0000	0000 0000	0000 0000	uuuu uuuu
PCS1	0000 0000	0000 0000	0000 0000	0000 0000	uuuu uuuu
IECC	0000 0000	0000 0000	0000 0000	0000 0000	uuuu uuuu
WDTC	0101 0011	0101 0011	0101 0011	0101 0011	uuuu uuuu
TB0C	0--- -000	0--- -000	0--- -000	0--- -000	u--- -uuu
TB1C	0--- -000	0--- -000	0--- -000	0--- -000	u--- -uuu
SADC0	0000 0000	0000 0000	0000 0000	0000 0000	uuuu uuuu
SADC1	0000 -000	0000 -000	0000 -000	0000 -000	uuuu -uuu
SADC2	---- 00--	---- 00--	---- 00--	---- 00--	---- uu--
SADOL	xxxx ----	xxxx ----	xxxx ----	xxxx ----	uuuu ---- (ADRFS=0) uuuu uuuu (ADRFS=1)
SADOH	xxxx xxxx	xxxx xxxx	xxxx xxxx	xxxx xxxx	uuuu uuuu (ADRFS=0) ---- uuuu (ADRFS=1)
INTC0	-000 0000	-000 0000	-000 0000	-000 0000	-uuu uuuu
INTC1	0000 0000	0000 0000	0000 0000	0000 0000	uuuu uuuu
INTC2	0000 0000	0000 0000	0000 0000	0000 0000	uuuu uuuu
INTC3	--00 --00	--00 --00	--00 --00	--00 --00	--uu --uu
MFI0	--00 --00	--00 --00	--00 --00	--00 --00	--uu --uu
MFI1	--00 --00	--00 --00	--00 --00	--00 --00	--uu --uu
MFI2	--00 --00	--00 --00	--00 --00	--00 --00	--uu --uu
INTEG	0000 0000	0000 0000	0000 0000	0000 0000	uuuu uuuu
PMPS0	0000 0000	0000 0000	0000 0000	0000 0000	uuuu uuuu
PMPS1	0000 0000	0000 0000	0000 0000	0000 0000	uuuu uuuu
CRCCR	---- ---0	---- ---0	---- ---0	---- ---0	---- ---u
CRCIN	0000 0000	0000 0000	0000 0000	0000 0000	uuuu uuuu
CRCDL	0000 0000	0000 0000	0000 0000	0000 0000	uuuu uuuu
CRCDH	0000 0000	0000 0000	0000 0000	0000 0000	uuuu uuuu
EEAL	0000 0000	0000 0000	0000 0000	0000 0000	uuuu uuuu
EEAH	---- ---0	---- ---0	---- ---0	---- ---0	---- ---u
EED	0000 0000	0000 0000	0000 0000	0000 0000	uuuu uuuu
FC0	0000 0000	0000 0000	0000 0000	0000 0000	uuuu uuuu
FC1	0000 0000	0000 0000	0000 0000	0000 0000	uuuu uuuu
FC2	---- --00	---- --00	---- --00	---- --00	---- --uu
FARL	0000 0000	0000 0000	0000 0000	0000 0000	uuuu uuuu
FARH	---0 0000	---0 0000	---0 0000	---0 0000	---u uuuu
FD0L	0000 0000	0000 0000	0000 0000	0000 0000	uuuu uuuu
FD0H	0000 0000	0000 0000	0000 0000	0000 0000	uuuu uuuu
FD1L	0000 0000	0000 0000	0000 0000	0000 0000	uuuu uuuu
FD1H	0000 0000	0000 0000	0000 0000	0000 0000	uuuu uuuu
FD2L	0000 0000	0000 0000	0000 0000	0000 0000	uuuu uuuu
FD2H	0000 0000	0000 0000	0000 0000	0000 0000	uuuu uuuu
FD3L	0000 0000	0000 0000	0000 0000	0000 0000	uuuu uuuu
FD3H	0000 0000	0000 0000	0000 0000	0000 0000	uuuu uuuu
CTMC0	0000 0000	0000 0000	0000 0000	0000 0000	uuuu uuuu

Register	Power-On Reset	$\overline{\text{RES}}$ Reset (Normal Operation)	$\overline{\text{RES}}$ Reset (IDLE/SLEEP)	WDT Time-out (Normal Operation)	WDT Time-out (IDLE/SLEEP)
CTMC1	0000 0000	0000 0000	0000 0000	0000 0000	uuuu uuuu
CTMDL	0000 0000	0000 0000	0000 0000	0000 0000	uuuu uuuu
CTMDH	---- --00	---- --00	---- --00	---- --00	---- --uu
CTMAL	0000 0000	0000 0000	0000 0000	0000 0000	uuuu uuuu
CTMAH	---- --00	---- --00	---- --00	---- --00	---- --uu
STM0C0	0000 0000	0000 0000	0000 0000	0000 0000	uuuu uuuu
STM0C1	0000 0000	0000 0000	0000 0000	0000 0000	uuuu uuuu
STM0DL	0000 0000	0000 0000	0000 0000	0000 0000	uuuu uuuu
STM0DH	---- --00	---- --00	---- --00	---- --00	---- --uu
STM0AL	0000 0000	0000 0000	0000 0000	0000 0000	uuuu uuuu
STM0AH	---- --00	---- --00	---- --00	---- --00	---- --uu
STM1C0	0000 0---	0000 0---	0000 0---	0000 0---	uuuu u---
STM1C1	0000 0000	0000 0000	0000 0000	0000 0000	uuuu uuuu
STM1DL	0000 0000	0000 0000	0000 0000	0000 0000	uuuu uuuu
STM1DH	0000 0000	0000 0000	0000 0000	0000 0000	uuuu uuuu
STM1AL	0000 0000	0000 0000	0000 0000	0000 0000	uuuu uuuu
STM1AH	0000 0000	0000 0000	0000 0000	0000 0000	uuuu uuuu
STM1RP	0000 0000	0000 0000	0000 0000	0000 0000	uuuu uuuu
STKPTR	0--- -000	0--- -000	0--- -000	0--- -000	u--- -uuu
PCRL	0000 0000	0000 0000	0000 0000	0000 0000	uuuu uuuu
PCRH	---0 0000	---0 0000	---0 0000	---0 0000	---u uuuu
SCOMC	-000 ----	-000 ----	-000 ----	-000 ----	-uuu ----
SIMC0	111- 0000	111- 0000	111- 0000	111- 0000	uuu- uuuu
SIMC1	1000 0001	1000 0001	1000 0001	1000 0001	uuuu uuuu
SIMD	xxxx xxxx	xxxx xxxx	xxxx xxxx	xxxx xxxx	uuuu uuuu
SIMA/SIMC2	0000 0000	0000 0000	0000 0000	0000 0000	uuuu uuuu
SIMTOC	0000 0000	0000 0000	0000 0000	0000 0000	uuuu uuuu
DA0L	1000 0010	1000 0010	1000 0010	1000 0010	uuuu uuuu
DA0H	--00 0000	--00 0000	--00 0000	--00 0000	--uu uuuu
DA1L	0000 0000	0000 0000	0000 0000	0000 0000	uuuu uuuu
DA1H	--10 0000	--10 0000	--10 0000	--10 0000	--uu uuuu
DAOPC	1100 ---0	1100 ---0	1100 ---0	1100 ---0	uuuu ---u
OPVOS	0-10 0000	0-10 0000	0-10 0000	0-10 0000	u-uu uuuu
PSCR	---- --00	---- --00	---- --00	---- --00	---- --uu
IFS	0000 0000	0000 0000	0000 0000	0000 0000	uuuu uuuu
RSTC	1010 1010	1010 1010	1010 1010	1010 1010	uuuu uuuu
USR	0000 1011	0000 1011	0000 1011	0000 1011	uuuu uuuu
UCR1	0000 00x0	0000 00x0	0000 00x0	0000 00x0	uuuu uuuu
UCR2	0000 0000	0000 0000	0000 0000	0000 0000	uuuu uuuu
UCR3	---- ---0	---- ---0	---- ---0	---- ---0	---- ---u
BRDH	0000 0000	0000 0000	0000 0000	0000 0000	uuuu uuuu
BRDL	0000 0000	0000 0000	0000 0000	0000 0000	uuuu uuuu
UFCR	--00 0000	--00 0000	--00 0000	--00 0000	--uu uuuu
TXR_RXR	xxxx xxxx	xxxx xxxx	xxxx xxxx	xxxx xxxx	uuuu uuuu
RxCNT	---- -000	---- -000	---- -000	---- -000	---- -uuu
EEC	0000 0000	0000 0000	0000 0000	0000 0000	uuuu uuuu

Note: “u” stands for unchanged
“x” stands for unknown
“-” stands for unimplemented

Input/Output Ports

Holtek microcontrollers offer considerable flexibility on their I/O ports. With the input or output designation of every pin fully under user program control, pull-high selections for all ports and wake-up selections on certain pins, the user is provided with an I/O structure to meet the needs of a wide range of application possibilities.

The device provides bidirectional input/output lines labeled with port names PA~PD. These I/O ports are mapped to the RAM Data Memory with specific addresses as shown in the Special Purpose Data Memory table. All of these I/O ports can be used for input and output operations. For input operation, these ports are non-latching, which means the inputs must be ready at the T2 rising edge of instruction "MOV A, [m]", where m denotes the port address. For output operation, all the data is latched and remains unchanged until the output latch is rewritten.

Register Name	Bit							
	7	6	5	4	3	2	1	0
PA	PA7	PA6	PA5	PA4	PA3	PA2	PA1	PA0
PAC	PAC7	PAC6	PAC5	PAC4	PAC3	—	PAC1	PAC0
PAPU	PAPU7	PAPU6	PAPU5	PAPU4	PAPU3	—	PAPU1	PAPU0
PAWU	PAWU7	PAWU6	PAWU5	PAWU4	PAWU3	—	PAWU1	PAWU0
PB	PB7	PB6	PB5	PB4	PB3	PB2	PB1	PB0
PBC	PBC7	PBC6	PBC5	PBC4	PBC3	PBC2	PBC1	PBC0
PBPU	PBPU7	PBPU6	PBPU5	PBPU4	PBPU3	PBPU2	PBPU1	PBPU0
PC	PC7	PC6	PC5	PC4	PC3	PC2	PC1	PC0
PCC	PCC7	PCC6	PCC5	PCC4	PCC3	PCC2	PCC1	PCC0
PCPU	PCPU7	PCPU6	PCPU5	PCPU4	PCPU3	PCPU2	PCPU1	PCPU0
PD	—	—	—	—	—	PD2	PD1	PD0
PDC	—	—	—	—	—	PDC2	PDC1	PDC0
PDPU	—	—	—	—	—	PDPU2	PDPU1	PDPU0

"—": Unimplemented, read as "0"

I/O Logic Function Register List

Pull-high Resistors

Many product applications require pull-high resistors for their switch inputs usually requiring the use of an external resistor. To eliminate the need for these external resistors, all I/O pins, when configured as an input have the capability of being connected to an internal pull-high resistor. These pull-high resistors are selected using the relevant pull-high control registers and are implemented using weak PMOS transistors.

Note that the pull-high resistor can be controlled by the relevant pull-high control register only when the pin-shared functional pin is selected as a digital input or NMOS output. Otherwise, the pull-high resistors cannot be enabled.

- **PxPU Register**

Bit	7	6	5	4	3	2	1	0
Name	PxPU7	PxPU6	PxPU5	PxPU4	PxPU3	PxPU2	PxPU1	PxPU0
R/W	R/W	R/W	R/W	R/W	R/W	R/W	R/W	R/W
POR	0	0	0	0	0	0	0	0

PxPUn: I/O Port x Pin pull-high function control
0: Disable
1: Enable

The PxPUn bit is used to control the pin pull-high function. Here the "x" is the Port name which can be A, B, C or D. However, the actual available bits for each I/O Port may be different.
Note: The PA2 pin is without pull-high function.

Port A Wake-up

The HALT instruction forces the microcontroller into the SLEEP or IDLE Mode which preserves power, a feature that is important for battery and other low-power applications. Various methods exist to wake-up the microcontroller, one of which is to change the logic condition on one of the Port A pins from high to low. This function is especially suitable for applications that can be woken up via external switches. Each pin on Port A can be selected individually to have this wake-up feature using the PAWU register.

Note that the wake-up function can be controlled by the wake-up control register only when the pin is selected as a general purpose input and the MCU enters the IDLE or SLEEP mode.

- **PAWU Register**

Bit	7	6	5	4	3	2	1	0
Name	PAWU7	PAWU6	PAWU5	PAWU4	PAWU3	PAWU2	PAWU1	PAWU0
R/W	R/W	R/W	R/W	R/W	R/W	R/W	R/W	R/W
POR	0	0	0	0	0	0	0	0

Bit 7~0 **PAWU7~PAWU0**: Port A pin Wake-up function control
0: Disable
1: Enable
Note: The PA2 pin is without wake-up function.

I/O Port Control Registers

Each I/O port has its own control register which controls the input/output configuration. With this control register, each CMOS output or input can be reconfigured dynamically under software control. Each pin of the I/O ports is directly mapped to a bit in its associated port control register. For the I/O pin to function as an input, the corresponding bit of the control register must be written as a "1". This will then allow the logic state of the input pin to be directly read by instructions. When the corresponding bit of the control register is written as a "0", the I/O pin will be setup as a CMOS output. If the pin is currently setup as an output, instructions can still be used to read the output register. However, it should be noted that the program will in fact only read the status of the output data latch and not the actual logic status of the output pin when the IECM is set to "0".

- **PxC Register**

Bit	7	6	5	4	3	2	1	0
Name	PxC7	PxC6	PxC5	PxC4	PxC3	PxC2	PxC1	PxC0
R/W	R/W	R/W	R/W	R/W	R/W	R/W	R/W	R/W
POR	1	1	1	1	1	1	1	1

PxCn: I/O Port x Pin type selection
0: Output
1: Input
The PxCn bit is used to control the pin type selection. Here the "x" is the Port name which can be A, B, C or D. However, the actual available bits for each I/O Port may be different.

I/O Port Power Source Control

This device supports different I/O port power source selections for PB6, PC0, PC1 and PC3~PC7 pins. With the exception of $\overline{\text{RES}}$/OCDS, the multi-power function is only effective when the pin is set to have a digital input or output function.

The port power can come from the power pin VDD or VDDIO, which is determined using the corresponding bit fields in the PMPS0~PMPS1 registers. The VDDIO power pin function should first be selected using the corresponding pin-shared function selection bits if the port power is supposed to come from the VDDIO pin.

An important point to know is that the input power voltage on the VDDIO pin should be equal to or less than the device supply power voltage V_{DD} when the VDDIO pin is selected as the port power supply pin.

• PMPS0 Register

Bit	7	6	5	4	3	2	1	0
Name	PMPS07	PMPS06	PMPS05	PMPS04	PMPS03	PMPS02	PMPS01	PMPS00
R/W	R/W	R/W	R/W	R/W	R/W	R/W	R/W	R/W
POR	0	0	0	0	0	0	0	0

Bit 7~6 **PMPS07~PMPS06**: PC3 pin-shared function selection
0x: V_{DD}
1x: V_{DDIO}
If the PC2 pin is switched to the VDDIO function, and the PMPS07~PMPS06 bits are set to “1x”, the VDDIO pin input voltage can be used for PC3 pin power.

Bit 5~4 **PMPS05~PMPS04**: PC1 pin-shared function selection
0x: V_{DD}
1x: V_{DDIO}
If the PC2 pin is switched to the VDDIO function, and the PMPS05~PMPS04 bits are set to “1x”, the VDDIO pin input voltage can be used for PC1 pin power.

Bit 3~2 **PMPS03~PMPS02**: PC0 pin-shared function selection
0x: V_{DD}
1x: V_{DDIO}
If the PC2 pin is switched to the VDDIO function, and the PMPS03~PMPS02 bits are set to “1x”, the VDDIO pin input voltage can be used for PC0 pin power.

Bit 1~0 **PMPS01~PMPS00**: PB6 pin-shared function selection
0x: V_{DD}
1x: V_{DDIO}
If the PC2 pin is switched to the VDDIO function, and the PMPS01~PMPS00 bits are set to “1x”, the VDDIO pin input voltage can be used for PB6 pin power.

• PMPS1 Register

Bit	7	6	5	4	3	2	1	0
Name	PMPS17	PMPS16	PMPS15	PMPS14	PMPS13	PMPS12	PMPS11	PMPS10
R/W	R/W	R/W	R/W	R/W	R/W	R/W	R/W	R/W
POR	0	0	0	0	0	0	0	0

Bit 7~6 **PMPS17~PMPS16**: PC7 pin-shared function selection
0x: V_{DD}
1x: V_{DDIO}
If the PC2 pin is switched to the VDDIO function, and the PMPS17~PMPS16 bits are set to “1x”, the VDDIO pin input voltage can be used for PC7 pin power.

Bit 5~4 **PMPS15~PMPS14**: PC6 pin-shared function selection
0x: V_{DD}
1x: V_{DDIO}

If the PC2 pin is switched to the VDDIO function, and the PMPS15~PMPS14 bits are set to "1x", the VDDIO pin input voltage can be used for PC6 pin power.

Bit 3~2 **PMPS13~PMPS12**: PC5 pin-shared function selection
0x: V_{DD}
1x: V_{DDIO}
If the PC2 pin is switched to the VDDIO function, and the PMPS13~PMPS12 bits are set to "1x", the VDDIO pin input voltage can be used for PC5 pin power.

Bit 1~0 **PMPS11~PMPS10**: PC4 pin-shared function selection
0x: V_{DD}
1x: V_{DDIO}
If the PC2 pin is switched to the VDDIO function, and the PMPS11~PMPS10 bits are set to "1x", the VDDIO pin input voltage can be used for PC4 pin power.

Pin-shared Functions

The flexibility of the microcontroller range is greatly enhanced by the use of pins that have more than one function. Limited numbers of pins can force serious design constraints on designers but by supplying pins with multi-functions, many of these difficulties can be overcome. For these pins, the desired function of the multi-function I/O pins is selected by a series of registers via the application program control.

Pin-shared Function Selection Registers

The limited number of supplied pins in a package can impose restrictions on the amount of functions a certain device can contain. However by allowing the same pins to share several different functions and providing a means of function selection, a wide range of different functions can be incorporated into even relatively small package sizes. The device includes Port "x" output function selection register "n", labeled as PxSn, and Input Function source pin selection register, labeled as IFS, which can select the desired functions of the multi-function pin-shared pins.

The most important point to note is to make sure that the desired pin-shared function is properly selected and also deselected. For most pin-shared functions, to select the desired pin-shared function, the pin-shared function should first be correctly selected using the corresponding pin-shared control register. After that the corresponding peripheral functional setting should be configured and then the peripheral function can be enabled. However, a special point must be noted for some digital input pins, such as INTn, xTCKn, STPnI, etc., which share the same pin-shared control configuration with their corresponding general purpose I/O functions when setting the relevant pin-shared control bit fields. To select these pin functions, in addition to the necessary pin-shared control and peripheral functional setup aforementioned, they must also be setup as input by setting the corresponding bit in the I/O port control register. To correctly deselect the pin-shared function, the peripheral function should first be disabled and then the corresponding pin-shared function control register can be modified to select other pin-shared functions.

Register Name	Bit							
	7	6	5	4	3	2	1	0
IFS	IFS7	IFS6	IFS5	IFS4	IFS3	IFS2	IFS1	IFS0
PAS0	PAS07	PAS06	—	—	PAS03	PAS02	—	—
PAS1	—	—	PAS15	PAS14	PAS13	PAS12	PAS11	PAS10
PBS0	PBS07	PBS06	PBS05	PBS04	PBS03	PBS02	PBS01	PBS00
PBS1	PBS17	PBS16	PBS15	PBS14	PBS13	PBS12	PBS11	PBS10
PCS0	PCS07	PCS06	PCS05	PCS04	PCS03	PCS02	PCS01	PCS00
PCS1	PCS17	PCS16	PCS15	PCS14	PCS13	PCS12	PCS11	PCS10

Pin-shared Function Selection Register List

• **IFS Register**

Bit	7	6	5	4	3	2	1	0
Name	IFS7	IFS6	IFS5	IFS4	IFS3	IFS2	IFS1	IFS0
R/W	R/W	R/W	R/W	R/W	R/W	R/W	R/W	R/W
POR	0	0	0	0	0	0	0	0

Bit 7~6 **IFS7~IFS6**: SDI/SDA input source pin selection
00: PC3
01: PC3
10: PC0
11: PC0

Bit 5~4 **IFS5~IFS4**: $\overline{\text{SCS}}$ input source pin selection
00: PB6
01: PB6
10: PC5
11: PC5

Bit 3~2 **IFS3~IFS2**: SCK/SCL input source pin selection
00: PC6
01: PC6
10: PC7
11: PC7

Bit 1~0 **IFS1~IFS0**: RX/TX input source pin selection
00: PC3
01: PC3
10: PC0
11: PC0

• **PAS0 Register**

Bit	7	6	5	4	3	2	1	0
Name	PAS07	PAS06	—	—	PAS03	PAS02	—	—
R/W	R/W	R/W	—	—	R/W	R/W	—	—
POR	0	0	—	—	0	0	—	—

Bit 7~6 **PAS07~PAS06**: PA3 pin-shared function selection
00: PA3/INT0/CTCK
01: PA3/INT0/CTCK
10: PA3/INT0/CTCK
11: CTP

Bit 5~4 Unimplemented, read as “0”

Bit 3~2 **PAS03~PAS02**: PA1 pin-shared function selection
00: PA1
01: PA1
10: AN10
11: OPA2P

Bit 1~0 Unimplemented, read as “0”

• **PAS1 Register**

Bit	7	6	5	4	3	2	1	0
Name	—	—	PAS15	PAS14	PAS13	PAS12	PAS11	PAS10
R/W	—	—	R/W	R/W	R/W	R/W	R/W	R/W
POR	—	—	0	0	0	0	0	0

Bit 7~6 Unimplemented, read as "0"

Bit 5~4 **PAS15~PAS14**: PA6 pin-shared function selection
00: PA6
01: PA6
10: PA6
11: Reserved

Bit 3~2 **PAS13~PAS12**: PA5 pin-shared function selection
00: PA5
01: CTPB
10: OPA0P
11: AN6

Bit 1~0 **PAS11~PAS10**: PA4 pin-shared function selection
00: PA4/STCK0
01: PA4/STCK0
10: STP0
11: AN9

• **PBS0 Register**

Bit	7	6	5	4	3	2	1	0
Name	PBS07	PBS06	PBS05	PBS04	PBS03	PBS02	PBS01	PBS00
R/W	R/W	R/W	R/W	R/W	R/W	R/W	R/W	R/W
POR	0	0	0	0	0	0	0	0

Bit 7~6 **PBS07~PBS06**: PB3 pin-shared function selection
00: PB3/STCK1
01: PB3/STCK1
10: PB3/STCK1
11: AN3

Bit 5~4 **PBS05~PBS04**: PB2 pin-shared function selection
00: PB2/STP1I
01: PB2/STP1I
10: PB2/STP1I
11: AN2

Bit 3~2 **PBS03~PBS02**: PB1 pin-shared function selection
00: PB1/STP0I
01: PB1/STP0I
10: PB1/STP0I
11: AN1

Bit 1~0 **PBS01~PBS00**: PB0 pin-shared function selection
00: PB0
01: PB0
10: PB0
11: AN0

• **PBS1 Register**

Bit	7	6	5	4	3	2	1	0
Name	PBS17	PBS16	PBS15	PBS14	PBS13	PBS12	PBS11	PBS10
R/W	R/W	R/W	R/W	R/W	R/W	R/W	R/W	R/W
POR	0	0	0	0	0	0	0	0

Bit 7~6 **PBS17~PBS16**: PB7 pin-shared function selection
00: PB7
01: PB7
10: PB7
11: OPA1P

Bit 5~4 **PBS15~PBS14**: PB6 pin-shared function selection
00: PB6/INT1
01: PB6/INT1
10: $\overline{\text{SCS}}$
11: AN7

Bit 3~2 **PBS13~PBS12**: PB5 pin-shared function selection
00: PB5
01: VREF
10: STP1B
11: AN5

Bit 1~0 **PBS11~PBS10**: PB4 pin-shared function selection
00: PB4
01: PB4
10: STP1
11: AN4

• **PCS0 Register**

Bit	7	6	5	4	3	2	1	0
Name	PCS07	PCS06	PCS05	PCS04	PCS03	PCS02	PCS01	PCS00
R/W	R/W	R/W	R/W	R/W	R/W	R/W	R/W	R/W
POR	0	0	0	0	0	0	0	0

Bit 7~6 **PCS07~PCS06**: PC3 pin-shared function selection
00: PC3
01: RX/TX
10: SDI/SDA
11: SCOM0

Bit 5~4 **PCS05~PCS04**: PC2 pin-shared function selection
00: PC2
01: PC2
10: PC2
11: VDDIO

Bit 3~2 **PCS03~PCS02**: PC1 pin-shared function selection
00: PC1
01: PC1
10: TX
11: SDO

Bit 1~0 **PCS01~PCS00**: PC0 pin-shared function selection
00: PC0
01: RX/TX
10: SDI/SDA
11: AN8

• **PCS1 Register**

Bit	7	6	5	4	3	2	1	0
Name	PCS17	PCS16	PCS15	PCS14	PCS13	PCS12	PCS11	PCS10
R/W	R/W	R/W	R/W	R/W	R/W	R/W	R/W	R/W
POR	0	0	0	0	0	0	0	0

Bit 7~6 **PCS17~PCS16**: PC7 pin-shared function selection
00: PC7
01: PC7
10: SCK/SCL
11: STP0B

Bit 5~4 **PCS15~PCS14**: PC6 pin-shared function selection
00: PC6
01: PC6
10: SCK/SCL
11: SCOM3

Bit 3~2 **PCS13~PCS12**: PC5 pin-shared function selection
00: PC5
01: PC5
10: $\overline{\text{SCS}}$
11: SCOM2

Bit 1~0 **PCS11~PCS10**: PC4 pin-shared function selection
00: PC4
01: TX
10: SDO
11: SCOM1

I/O Pin Structures

The accompanying diagram illustrates the internal structures of the I/O logic function. As the exact logical construction of the I/O pin will differ from this drawing, it is supplied as a guide only to assist with the functional understanding of the logic function I/O pins. The wide range of pin-shared structures does not permit all types to be shown.

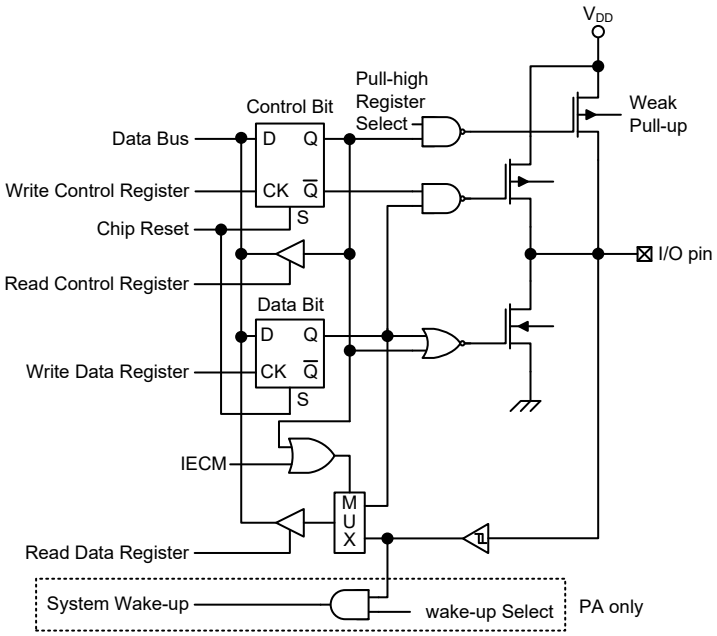

Logic Function Input/Output Structure

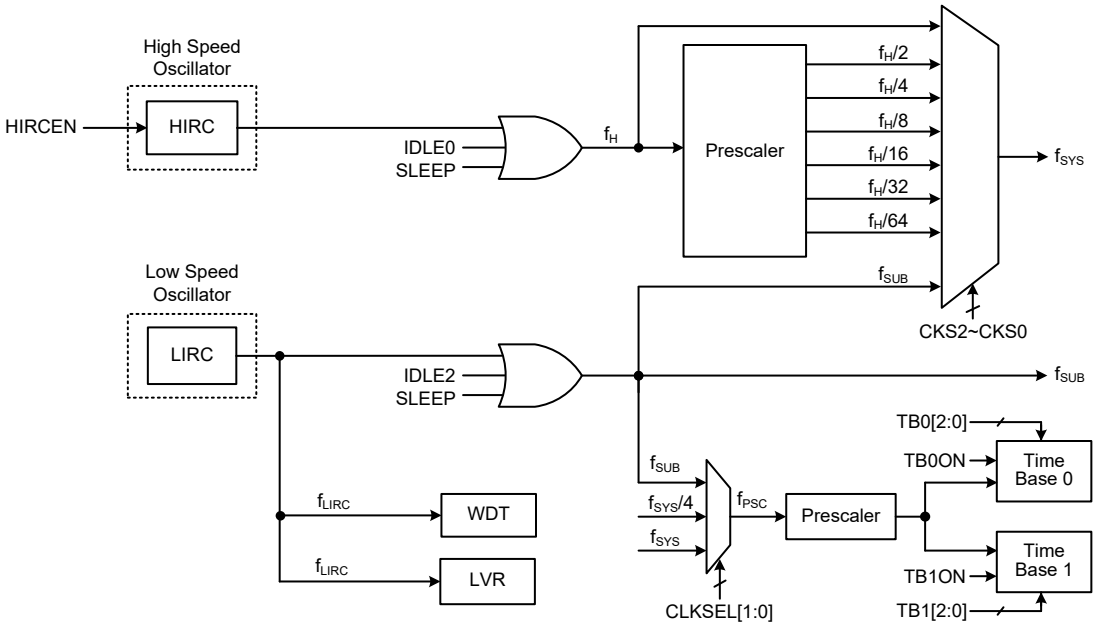

Note: The PA2OEN value is determined by the RSTC register value. Please refer to the RSTC register description for details.

PA2 Port Output Structure

READ PORT Function

The READ PORT function is used to manage the reading of the output data from the data latch or I/O pin, which is specially designed for the IEC 60730 self-diagnostic test on the I/O function and A/D paths. There is a register, IECC, which is used to control the READ PORT function. If the READ PORT function is disabled, the pin function will operate as the selected pin-shared function. When a specific data pattern, “11001010”, is written into the IECC register, the internal signal named IECM will be set high to enable the READ PORT function. If the READ PORT function is enabled, the value on the corresponding pins will be passed to the accumulator ACC when the read port instruction “mov acc, Px” is executed where the “x” stands for the corresponding I/O port name.

Note that the READ PORT mode can only control the input path and will not affect the pin-shared function assignment and the current MCU operation. However, when the IECC register content is set to any other values rather than “11001010”, the IECM internal signal will be cleared to 0 to disable the READ PORT function, and the reading path will be from the data latch. If the READ PORT function is disabled, the pin function will operate as the selected pin-shared function.

• IECC Register

Bit	7	6	5	4	3	2	1	0
Name	IECS7	IECS6	IECS5	IECS4	IECS3	IECS2	IECS1	IECS0
R/W	R/W	R/W	R/W	R/W	R/W	R/W	R/W	R/W
POR	0	0	0	0	0	0	0	0

Bit 7~0 **IECS7~IECS0**: READ PORT function enable control bit 7 ~ bit 0
11001010: IECM=1 – READ PORT function is enabled
Others: IECM=0 – READ PORT function is disabled

READ PORT Function	Disabled		Enabled	
Port Control Register Bit – PxC.n	1	0	1	0
I/O Function	Pin value	Data latch value	Pin value	
Digital Input Function				
Digital Output Function (except SIM and UART)	0			
SIM: SCK/SCL, SDI/SDA UART: RX/TX	Pin value			
Analog Function	0			
$\overline{\text{RES}}$	0			

Note: The value in the above table is the content of the ACC register after "mov a, Px" instruction is executed where "x" means the relevant port name.

The additional function of the READ PORT mode is to check the A/D path. When the READ PORT function is disabled, the A/D path from the external pin to the internal analog input will be switched off if the A/D input pin function is not selected by the corresponding selection bits. For the MCU with A/D converter channels, such as A/D AN10~AN0, the desired A/D channel can be switched on by properly configuring the external analog input channel selection bits in the A/D Control Register together with the corresponding analog input pin function is selected. However, the additional function of the READ PORT mode is to force the A/D path to be switched on. For example, when the AN0 is selected as the analog input channel as the READ PORT function is enabled, the AN0 analog input path will be switched on even if the AN0 analog input pin function is not selected. In this way, the AN0 analog input path can be examined by internally connecting the digital output on this shared pin with the AN0 analog input pin switch and then converting the corresponding digital data without any external analog input voltage connected.

Note that the A/D converter reference voltage should be equal to the I/O power supply voltage when examining the A/D path using the READ PORT function.

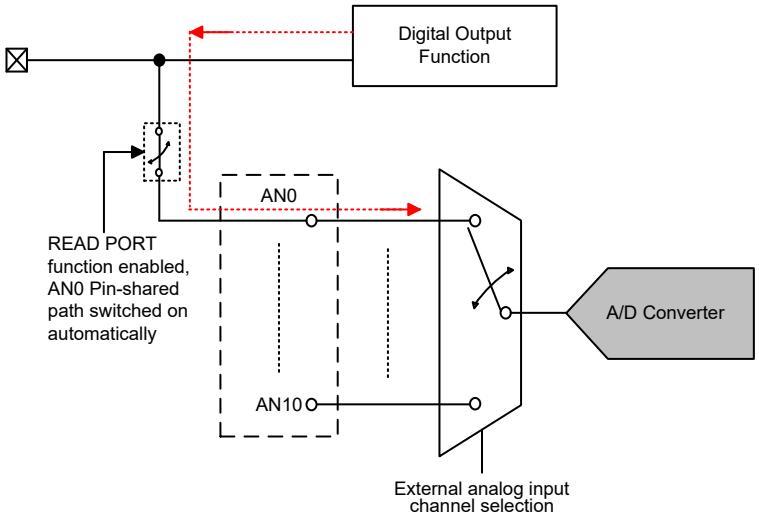

A/D Channel Input Path Internally Connection

Programming Considerations

Within the user program, one of the things first to consider is port initialisation. After a reset, all of the I/O data and port control registers will be set high. This means that all I/O pins will default to an input state, the level of which depends on the other connected circuitry and whether pull-high selections have been chosen. If the port control registers are then programmed to setup some pins as outputs, these output pins will have an initial high output value unless the associated port data registers are first programmed. Selecting which pins are inputs and which are outputs can be achieved byte-wide by loading the correct values into the appropriate port control register or by programming individual bits in the port control register using the "SET [m].i" and "CLR [m].i" instructions. Note that when using these bit control instructions, a read-modify-write operation takes place. The microcontroller must first read in the data on the entire port, modify it to the required new bit values and then rewrite this data back to the output ports.

Port A has the additional capability of providing wake-up functions. When the device is in the SLEEP or IDLE Mode, various methods are available to wake the device up. One of these is a high to low transition of any of the Port A pins. Single or multiple pins on Port A can be setup to have this function.

Timer Modules – TM

One of the most fundamental functions in any microcontroller device is the ability to control and measure time. To implement time related functions the device includes several Timer Modules, generally abbreviated to the name TM. The TMs are multi-purpose timing units and serve to provide operations such as Timer/Counter, Input Capture, Compare Match Output and Single Pulse Output as well as being the functional unit for the generation of PWM signals. Each of the TMs has two interrupts. The addition of input and output pins for each TM ensures that users are provided with timing units with a wide and flexible range of features.

The common features of the different TM types are described here with more detailed information provided in the individual Compact and Standard Type TM sections.

Introduction

The device contains three TMs and each individual TM is categorised as a certain type, namely Compact Type TM or Standard Type TM. Although similar in nature, the different TM types vary in their feature complexity. The common features to all of the Compact and Standard TMs will be described in this section and the detailed operation regarding each of the TM types will be described in separate sections. The main features and differences between the two types of TMs are summarised in the accompanying table.

TM Function	CTM	STM
Timer/Counter	√	√
Input Capture	—	√
Compare Match Output	√	√
PWM Output	√	√
Single Pulse Output	—	√
PWM Alignment	Edge	Edge
PWM Adjustment Period & Duty	Duty or Period	Duty or Period

TM Function Summary

TM Operation

The different types of TM offer a diverse range of functions, from simple timing operations to PWM signal generation. The key to understanding how the TM operates is to see it in terms of a free running counter whose value is then compared with the value of pre-programmed internal comparators. When the free running counter has the same value as the pre-programmed comparator, known as a compare match situation, a TM interrupt signal will be generated which can clear the counter and perhaps also change the condition of the TM output pin. The internal TM counter is driven by a user selectable clock source, which can be an internal clock or an external pin.

TM Clock Source

The clock source which drives the main counter in each TM can originate from various sources. The selection of the required clock source is implemented using the xTnCK2~xTnCK0 bits in the xTMn control registers, where "x" stands for C or S type TM and "n" stands for the specific TM serial number. For the CTM there is no serial number "n" in the relevant pin or control register bits since there is only one CTM in the device. The clock source can be a ratio of the system clock, f_{SYS}, or the internal high clock, f_H, the f_{SUB} clock source or the external xTCKn pin. The xTCKn pin clock source is used to allow an external signal to drive the TM as an external clock source for event counting.

TM Interrupts

Each Compact or Standard type TMs has two internal interrupts, one for each of the internal comparator A or comparator P, which generate a TM interrupt when a compare match condition occurs. When a TM interrupt is generated, it can be used to clear the counter and also to change the state of the TM output pins.

TM External Pins

Each of the TMs, irrespective of what type, has one TM input pin, with the label xTCKn while the STMn has another input pin with the label STPnI. The xTMn input pin, xTCKn, is essentially a clock source for the xTMn and is selected using the xTnCK2~xTnCK0 bits in the xTMnC0 register. This external TM input pin allows an external clock source to drive the internal TM. The xTCKn input pin can be chosen to have either a rising or falling active edge. The STCKn pin is also used as the external trigger input pin in single pulse output mode for the STMn.

The STMn has another input pin, STPnI, which is the capture input whose active edge can be a rising edge, a falling edge or both rising and falling edges and the active edge transition type is selected using the STnIO1~STnIO0 bits in the STMnC1 register.

The TMs each have two output pins with the label xTPn and the xTPnB. When the TM is in the Compare Match Output Mode, this xTPnB pin can be controlled by the TM to switch to a high or low level or to toggle when a compare match situation occurs. The xTPnB pin output is the inverted signal of the xTPn. The external output pins are also the pins where the TM generates the PWM output waveform.

As the TM input and output pins are pin-shared with other functions, the TM input and output functions must first be selected using relevant pin-shared function selection. The details of the pin-shared function selection are described in the pin-shared function section.

CTM		STM0		STM1	
Input	Output	Input	Output	Input	Output
CTCK	CTP, CTPB	STCK0, STP0I	STP0, STP0B	STCK1, STP1I	STP1, STP1B

TM External Pins

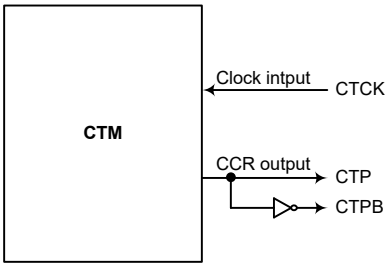

CTM Function Pin Block Diagram

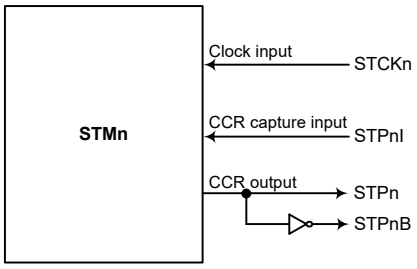

STM Function Pin Block Diagram (n=0~1)

Programming Considerations

The TM Counter Registers and the Capture/Compare CCRA registers all have a low and high byte structure. The high bytes can be directly accessed, but as the low bytes can only be accessed via an internal 8-bit buffer, reading or writing to these register pairs must be carried out in a specific way. The important point to note is that data transfer to and from the 8-bit buffer and its related low byte only takes place when a write or read operation to its corresponding high byte is executed.

As the CCRA registers are implemented in the way shown in the following diagram and accessing these register pairs is carried out in a specific way as described above, it is recommended to use the "MOV" instruction to access the CCRA low byte registers, named xTMnAL, using the following access procedures. Accessing the CCRA low byte registers without following these access procedures will result in unpredictable values.

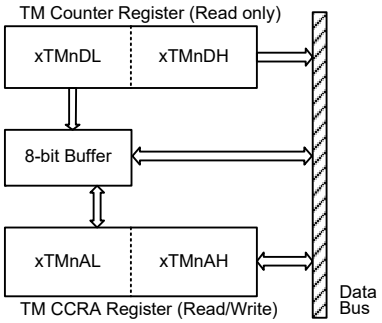

The following steps show the read and write procedures:

- Writing Data to CCRA
  - Step 1. Write data to Low Byte xTMnAL
    - Note that here data is only written to the 8-bit buffer.
  - Step 2. Write data to High Byte xTMnAH
    - Here data is written directly to the high byte registers and simultaneously data is latched from the 8-bit buffer to the Low Byte registers.

- Reading Data from the Counter Registers and CCRA
  - Step 1. Read data from the High Byte xTMnDH, xTMnAH
    – Here data is read directly from the High Byte registers and simultaneously data is latched from the Low Byte register into the 8-bit buffer.
  - Step 2. Read data from the Low Byte xTMnDL, xTMnAL
    – This step reads data from the 8-bit buffer.

Compact Type TM – CTM

The Compact TM type contains three operating modes, which are Compare Match Output, Timer/Event Counter and PWM Output modes. The Compact TM can also be controlled with an external input pin and can drive two external output pins.

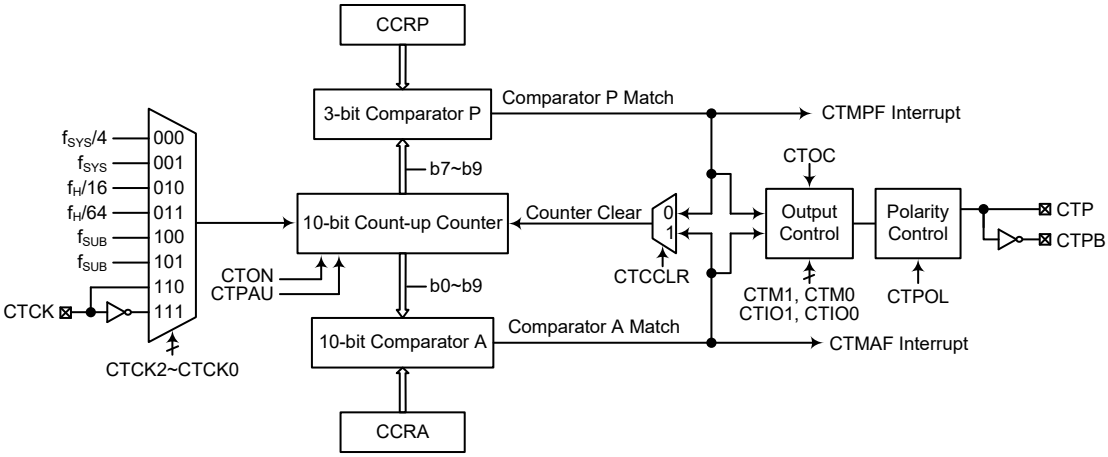

Note: 1. As the CTM external pins are pin-shared with other functions, so before using the CTM function the relevant pin-shared function registers must be set properly to enable the CTM pin function. The CTCK pin, if used, must also be set as an input by setting the corresponding bits in the port control register.
2. The CTPB is the inverted signal of the CTP.

10-bit Compact Type TM Block Diagram

Compact Type TM Operation

The size of Compact TM is 10-bit wide and its core is a 10-bit count-up counter which is driven by a user selectable internal or external clock source. There are also two internal comparators with the names, Comparator A and Comparator P. These comparators will compare the value in the counter with CCRP and CCRA registers. The CCRP is three bits wide whose value is compared with the highest 3 bits in the counter while the CCRA is the 10 bits and therefore compares with all counter bits.

The only way of changing the value of the 10-bit counter using the application program, is to clear the counter by changing the CTON bit from low to high. The counter will also be cleared automatically by a counter overflow or a compare match with one of its associated comparators. When these conditions occur, a CTM interrupt signal will also usually be generated. The Compact Type TM can operate in a number of different operational modes, can be driven by different clock sources including an input pin and can also control two output pins. All operating setup conditions are selected using relevant internal registers.

Compact Type TM Register Description

Overall operation of the Compact TM is controlled using several registers. A read only register pair exists to store the internal counter 10-bit value, while a read/write register pair exists to store the internal 10-bit CCRA value. The remaining two registers are control registers which setup the different operating and control modes as well as the 3 CCRP bits.

Register Name	Bit							
	7	6	5	4	3	2	1	0
CTMC0	CTPAU	CTCK2	CTCK1	CTCK0	CTON	CTRP2	CTRP1	CTRP0
CTMC1	CTM1	CTM0	CTIO1	CTIO0	CTOC	CTPOL	CTDPX	CTCCLR
CTMDL	D7	D6	D5	D4	D3	D2	D1	D0
CTMDH	—	—	—	—	—	—	D9	D8
CTMAL	D7	D6	D5	D4	D3	D2	D1	D0
CTMAH	—	—	—	—	—	—	D9	D8

10-bit Compact TM Register List

- **CTMC0 Register**

Bit	7	6	5	4	3	2	1	0
Name	CTPAU	CTCK2	CTCK1	CTCK0	CTON	CTRP2	CTRP1	CTRP0
R/W	R/W	R/W	R/W	R/W	R/W	R/W	R/W	R/W
POR	0	0	0	0	0	0	0	0

Bit 7 **CTPAU**: CTM Counter Pause Control
0: Run
1: Pause

The counter can be paused by setting this bit high. Clearing the bit to zero restores normal counter operation. When in a Pause condition the CTM will remain powered up and continue to consume power. The counter will retain its residual value when this bit changes from low to high and resume counting from this value when the bit changes to a low value again

Bit 6~4 **CTCK2~CTCK0**: Select CTM Counter clock
000: $f_{SYS}/4$
001: f_{SYS}
010: $f_H/16$
011: $f_H/64$
100: f_{SUB}
101: f_{SUB}
110: CTCK rising edge clock
111: CTCK falling edge clock

These three bits are used to select the clock source for the CTM. The external pin clock source can be chosen to be active on the rising or falling edge. The clock source f_{SYS} is the system clock, while f_H and f_{SUB} are other internal clocks, the details of which can be found in the oscillator section.

Bit 3 **CTON**: CTM Counter On/Off Control
0: Off
1: On

This bit controls the overall on/off function of the CTM. Setting the bit high enables the counter to run, clearing the bit disables the CTM. Clearing this bit to zero will stop the counter from counting and turn off the CTM which will reduce its power consumption. When the bit changes state from low to high the internal counter value will be reset to zero, however when the bit changes from high to low, the internal counter will retain its residual value until the bit returns high again.

If the CTM is in the Compare Match Output Mode or the PWM Output Mode then the CTM output pin will be reset to its initial condition, as specified by the CTOC bit, when the CTON bit changes from low to high.

Bit 2~0 **CTRP2~CTRP0**: CTM CCRP 3-bit register, compared with the CTM Counter bit 9 ~ bit 7

Comparator P Match Period=
000: 1024 CTM clocks
001: 128 CTM clocks
010: 256 CTM clocks
011: 384 CTM clocks
100: 512 CTM clocks
101: 640 CTM clocks
110: 768 CTM clocks
111: 896 CTM clocks

These three bits are used to setup the value on the internal CCRP 3-bit register, which are then compared with the internal counter's highest three bits. The result of this comparison can be selected to clear the internal counter if the CTCCLR bit is set to zero. Setting the CTCCLR bit to zero ensures that a compare match with the CCRP values will reset the internal counter. As the CCRP bits are only compared with the highest three counter bits, the compare values exist in 128 clock cycle multiples. Clearing all three bits to zero is in effect allowing the counter to overflow at its maximum value.

• CTMC1 Register

Bit	7	6	5	4	3	2	1	0
Name	CTM1	CTM0	CTIO1	CTIO0	CTOC	CTPOL	CTDPX	CTCCLR
R/W	R/W	R/W	R/W	R/W	R/W	R/W	R/W	R/W
POR	0	0	0	0	0	0	0	0

Bit 7~6 **CTM1~CTM0**: Select CTM Operating Mode
00: Compare Match Output Mode
01: Undefined
10: PWM Output Mode
11: Timer/Counter Mode

These bits setup the required operating mode for the CTM. To ensure reliable operation the CTM should be switched off before any changes are made to the CTM1 and CTM0 bits. In the Timer/Counter Mode, the CTM output pin state is undefined.

Bit 5~4 **CTIO1~CTIO0**: Select CTM external pin function

Compare Match Output Mode
00: No change
01: Output low
10: Output high
11: Toggle output

PWM Output Mode
00: PWM output inactive state
01: PWM output active state
10: PWM output
11: Undefined

Timer/Counter Mode
Unused

These two bits are used to determine how the CTM external pin changes state when a certain condition is reached. The function that these bits select depends upon in which mode the CTM is running.

In the Compare Match Output Mode, the CTIO1 and CTIO0 bits determine how the CTM output pin changes state when a compare match occurs from the Comparator A. The CTM output pin can be setup to switch high, switch low or to toggle its present state when a compare match occurs from the Comparator A. When the bits are both zero, then no change will take place on the output. The initial value of the CTM output pin should be setup using the CTOC bit in the CTMC1 register. Note that the output level requested by the CTIO1 and CTIO0 bits must be different from the initial value setup using the CTOC bit otherwise no change will occur on the CTM output pin when a compare match occurs. After the CTM output pin changes state, it can be reset to its initial level by changing the level of the CTON bit from low to high.

In the PWM Output Mode, the CTIO1 and CTIO0 bits determine how the CTM output pin changes state when a certain compare match condition occurs. The PWM output function is modified by changing these two bits. It is necessary to change the values of the CTIO1 and CTIO0 bits only after the CTM has been switched off. Unpredictable PWM outputs will occur if the CTIO1 and CTIO0 bits are changed when the CTM is running.

Bit 3 **CTOC**: CTM CTP Output control

Compare Match Output Mode
0: Initial low
1: Initial high

PWM Output Mode
0: Active low
1: Active high

This is the output control bit for the CTM output pin. Its operation depends upon whether CTM is being used in the Compare Match Output Mode or in the PWM Output Mode. It has no effect if the CTM is in the Timer/Counter Mode. In the Compare Match Output Mode it determines the logic level of the CTM output pin before a compare match occurs. In the PWM Output Mode it determines if the PWM signal is active high or active low.

Bit 2 **CTPOL**: CTP Output polarity control
0: Non-invert
1: Invert

This bit controls the polarity of the CTP output pin. When the bit is set high the CTM output pin will be inverted and not inverted when the bit is zero. It has no effect if the CTM is in the Timer/Counter Mode.

Bit 1 **CTDPX**: CTM PWM duty/period control
0: CCRP – period; CCRA – duty
1: CCRP – duty; CCRA – period

This bit determines which of the CCRA and CCRP registers are used for period and duty control of the PWM waveform.

Bit 0 **CTCCLR**: Select CTM Counter Clear condition
0: Comparator P match
1: Comparator A match

This bit is used to select the method which clears the counter. Remember that the Compact TM contains two comparators, Comparator A and Comparator P, either of which can be selected to clear the internal counter. With the CTCCLR bit set high, the counter will be cleared when a compare match occurs from the Comparator A. When the bit is low, the counter will be cleared when a compare match occurs from the Comparator P or with a counter overflow. A counter overflow clearing method can only be implemented if the CCRP bits are all cleared to zero. The CTCCLR bit is not used in the PWM Output Mode.

• **CTMDL Register**

Bit	7	6	5	4	3	2	1	0
Name	D7	D6	D5	D4	D3	D2	D1	D0
R/W	R	R	R	R	R	R	R	R
POR	0	0	0	0	0	0	0	0

Bit 7~0 **D7~D0**: CTM Counter Low Byte Register bit 7 ~ bit 0
CTM 10-bit Counter bit 7 ~ bit 0

• **CTMDH Register**

Bit	7	6	5	4	3	2	1	0
Name	—	—	—	—	—	—	D9	D8
R/W	—	—	—	—	—	—	R	R
POR	—	—	—	—	—	—	0	0

Bit 7~2 Unimplemented, read as "0"

Bit 1~0 **D9~D8**: CTM Counter High Byte Register bit 1 ~ bit 0
CTM 10-bit Counter bit 9 ~ bit 8

• **CTMAL Register**

Bit	7	6	5	4	3	2	1	0
Name	D7	D6	D5	D4	D3	D2	D1	D0
R/W	R/W	R/W	R/W	R/W	R/W	R/W	R/W	R/W
POR	0	0	0	0	0	0	0	0

Bit 7~0 **D7~D0**: CTM CCRA Low Byte Register bit 7 ~ bit 0
CTM 10-bit CCRA bit 7 ~ bit 0

• **CTMAH Register**

Bit	7	6	5	4	3	2	1	0
Name	—	—	—	—	—	—	D9	D8
R/W	—	—	—	—	—	—	R/W	R/W
POR	—	—	—	—	—	—	0	0

Bit 7~2 Unimplemented, read as "0"

Bit 1~0 **D9~D8**: CTM CCRA High Byte Register bit 1 ~ bit 0
CTM 10-bit CCRA bit 9 ~ bit 8

Compact Type TM Operating Modes

The Compact Type TM can operate in one of three operating modes, Compare Match Output Mode, PWM Output Mode or Timer/Counter Mode. The operating mode is selected using the CTM1 and CTM0 bits in the CTMC1 register.

Compare Match Output Mode

To select this mode, bits CTM1 and CTM0 in the CTMC1 register, should be set to 00 respectively. In this mode once the counter is enabled and running it can be cleared by three methods. These are a counter overflow, a compare match from Comparator A and a compare match from Comparator P. When the CTCCLR bit is low, there are two ways in which the counter can be cleared. One is when a compare match from Comparator P, the other is when the CCRP bits are all zero which allows the counter to overflow. Here both CTMAF and CTMPF interrupt request flags for Comparator A and Comparator P respectively, will both be generated.

If the CTCCLR bit in the CTMC1 register is high then the counter will be cleared when a compare match occurs from Comparator A. However, here only the CTMAF interrupt request flag will be generated even if the value of the CCRP bits is less than that of the CCRA registers. Therefore when CTCCLR is high no CTMPF interrupt request flag will be generated. If the CCRA bits are all zero, the counter will overflow when it reaches its maximum 10-bit, 3FF Hex, value, however here the CTMAF interrupt request flag will not be generated.

As the name of the mode suggests, after a comparison is made, the CTM output pin will change state. The CTM output pin condition however only changes state when a CTMAF interrupt request flag is generated after a compare match occurs from Comparator A. The CTMPF interrupt request flag, generated from a compare match occurs from Comparator P, will have no effect on the CTM output pin. The way in which the CTM output pin changes state are determined by the condition of the CTIO1 and CTIO0 bits in the CTMC1 register. The CTM output pin can be selected using the CTIO1 and CTIO0 bits to go high, to go low or to toggle from its present condition when a compare match occurs from Comparator A. The initial condition of the CTM output pin, which is setup after the CTON bit changes from low to high, is setup using the CTOC bit. Note that if the CTIO1 and CTIO0 bits are zero then no pin change will take place.

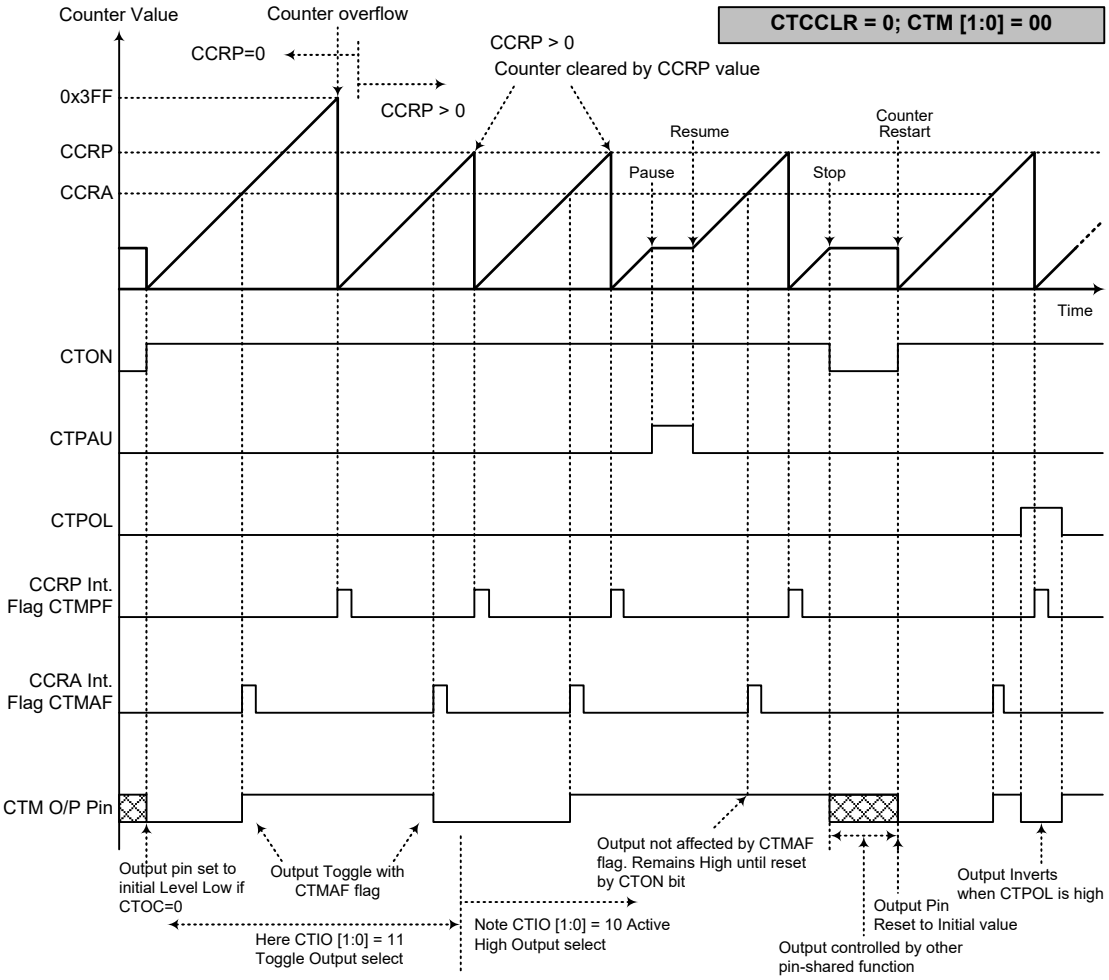

Compare Match Output Mode – CTCCLR=0

Note: 1. With CTCCLR=0, a Comparator P match will clear the counter
2. The CTM output pin controlled only by the CTMAF flag
3. The output pin reset to initial state by a CTON bit rising edge

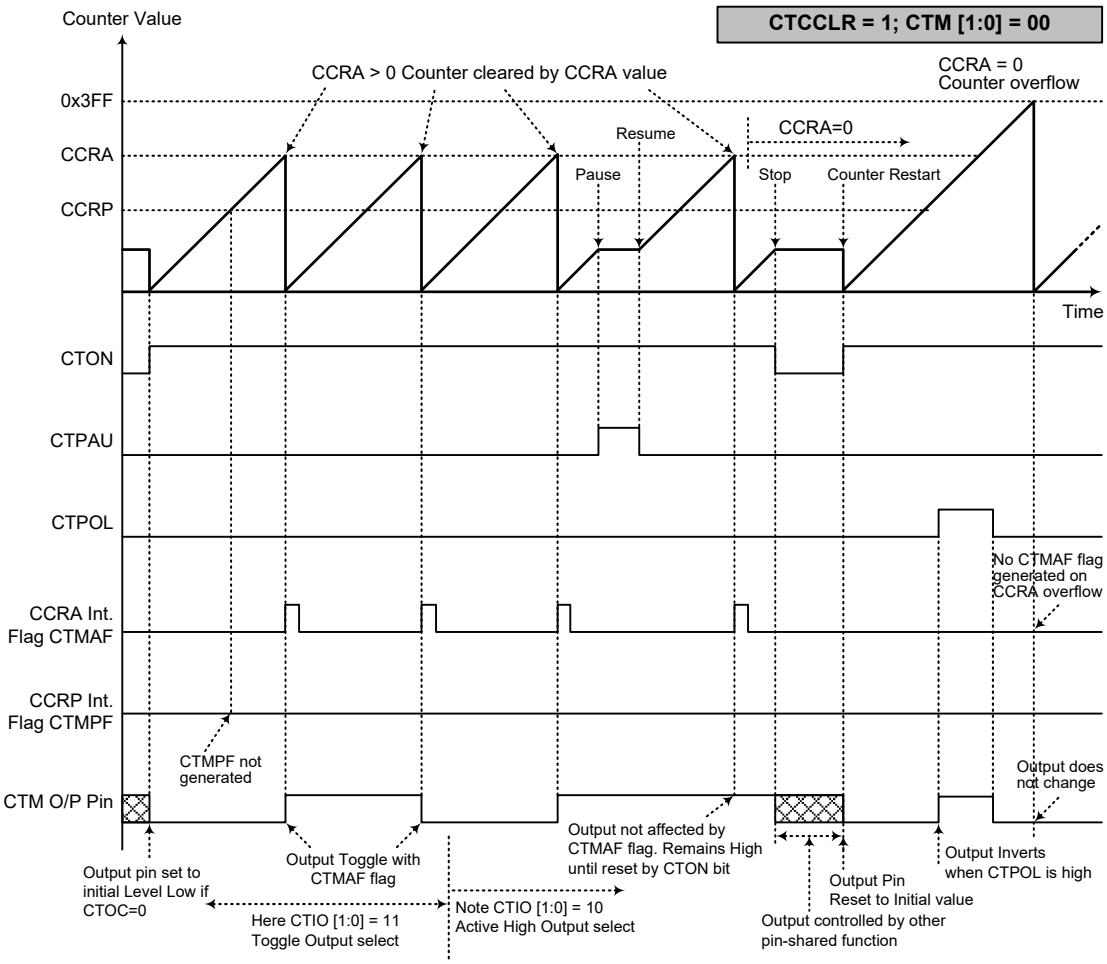

Compare Match Output Mode – CTCCLR=1

Note: 1. With CTCCLR=1, a Comparator A match will clear the counter
2. The CTM output pin controlled only by the CTMAF flag
3. The output pin reset to initial state by a CTON rising edge
4. The CTMPF flags is not generated when CTCCLR=1

Timer/Counter Mode

To select this mode, bits CTM1 and CTM0 in the CTMC1 register should be set to 11 respectively. The Timer/Counter Mode operates in an identical way to the Compare Match Output Mode generating the same interrupt flags. The exception is that in the Timer/Counter Mode the CTM output pin is not used. Therefore the above description and Timing Diagrams for the Compare Match Output Mode can be used to understand its function. As the CTM output pin is not used in this mode, the pin can be used as a normal I/O pin or other pin-shared function.

PWM Output Mode

To select this mode, bits CTM1 and CTM0 in the CTMC1 register should be set to 10 respectively. The PWM function within the CTM is useful for applications which require functions such as motor control, heating control, illumination control etc. By providing a signal of fixed frequency but of varying duty cycle on the CTM output pin, a square wave AC waveform can be generated with varying equivalent DC RMS values.

As both the period and duty cycle of the PWM waveform can be controlled, the choice of generated waveform is extremely flexible. In the PWM Output Mode, the CTCCLR bit has no effect on the PWM operation. Both of the CCRA and CCRP registers are used to generate the PWM waveform, one register is used to clear the internal counter and thus control the PWM waveform frequency, while the other one is used to control the duty cycle. Which register is used to control either frequency or duty cycle is determined using the CTDPX bit in the CTMC1 register. The PWM waveform frequency and duty cycle can therefore be controlled by the values in the CCRA and CCRP registers.

An interrupt flag, one for each of the CCRA and CCRP, will be generated when a compare match occurs from either Comparator A or Comparator P. The CTOC bit In the CTMC1 register is used to select the required polarity of the PWM waveform while the two CTIO1 and CTIO0 bits are used to enable the PWM output or to force the CTM output pin to a fixed high or low level. The CTPOL bit is used to reverse the polarity of the PWM output waveform.

- **CTM, PWM Output Mode, Edge-aligned Mode, CTDPX=0**

CCRP	001b	010b	011b	100b	101b	110b	111b	000b
Period	128	256	384	512	640	768	896	1024
Duty	CCRA							

If f_{SYS}=8MHz, CTM clock source is $f_{SYS}/4$, CCRP=100b, CCRA=128,

The CTM PWM output frequency=$(f_{SYS}/4)/512=f_{SYS}/2048$=3.9063kHz, duty=128/512=25%.

If the Duty value defined by the CCRA register is equal to or greater than the Period value, then the PWM output duty is 100%.

- **CTM, PWM Output Mode, Edge-aligned Mode, CTDPX=1**

CCRP	001b	010b	011b	100b	101b	110b	111b	000b
Period	CCRA							
Duty	128	256	384	512	640	768	896	1024

The PWM output period is determined by the CCRA register value together with the CTM clock while the PWM duty cycle is defined by the CCRP register value.

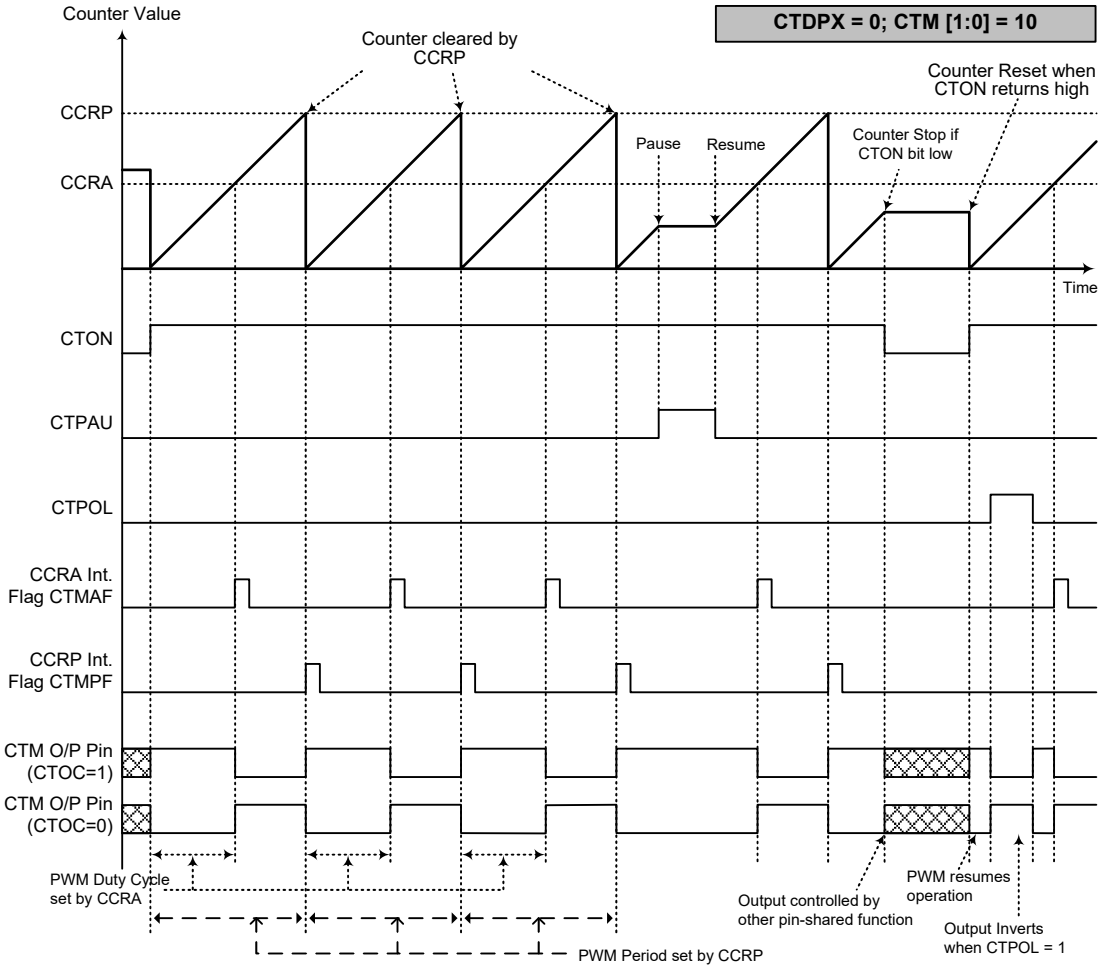

PWM Output Mode – CTDPX=0

Note: 1. Here CTDPX=0 – Counter cleared by CCRP
2. A counter clear sets PWM Period
3. The internal PWM function continues running even when CTIO[1:0]=00 or 01
4. The CTCCLR bit has no influence on PWM operation

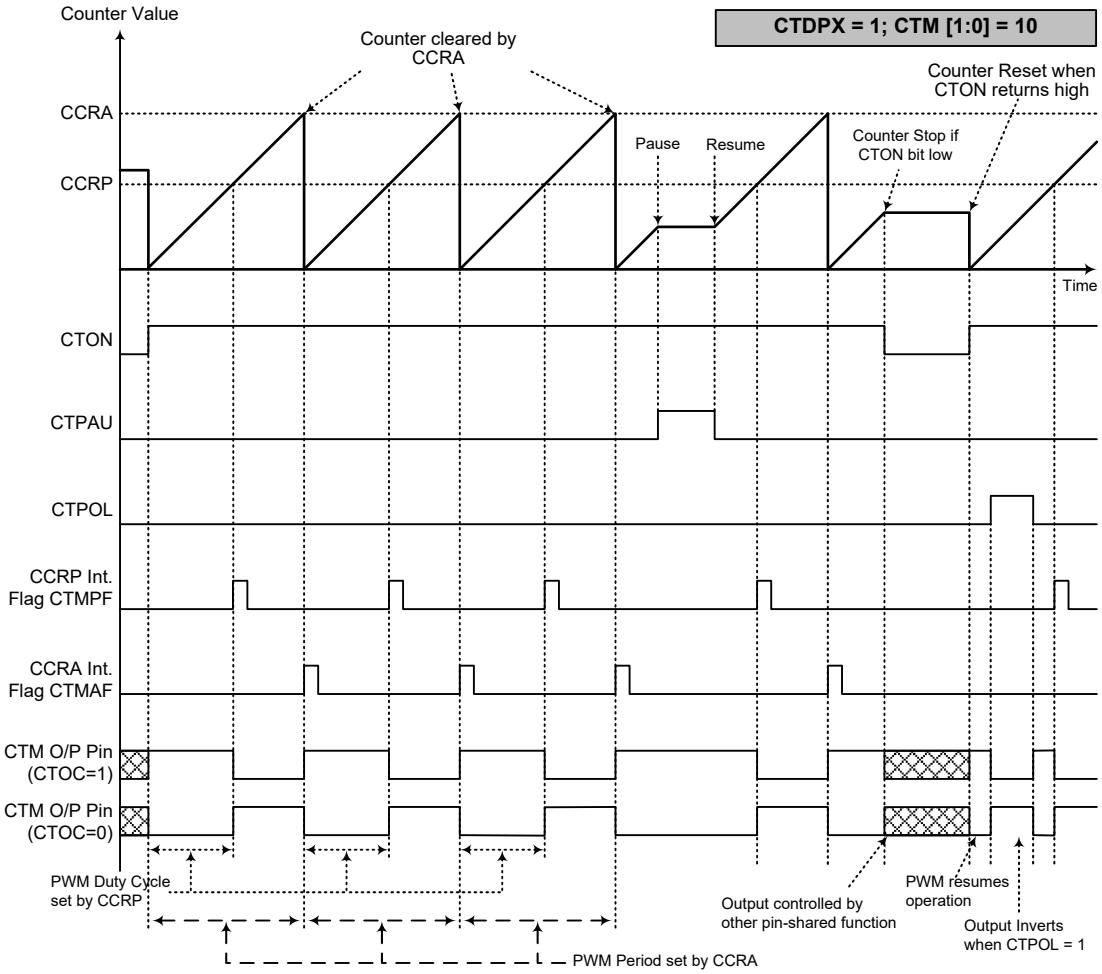

PWM Output Mode – CTDPX=1

Note: 1. Here CTDPX=1 – Counter cleared by CCRA
2. A counter clear sets PWM Period
3. The internal PWM function continues even when CTIO[1:0]=00 or 01
4. The CTCCLR bit has no influence on PWM operation

Standard Type TM – STM

The Standard Type TM contains five operating modes, which are Compare Match Output, Timer/Event Counter, Capture Input, Single Pulse Output and PWM Output modes. The Standard TM can also be controlled with two external input pins and can drive two external output pins.

STM Core	STM Input Pins	STM Output Pins
10-bit STM (STM0)	STCK0, STP0I	STP0, STP0B
16-bit STM (STM1)	STCK1, STP1I	STP1, STP1B

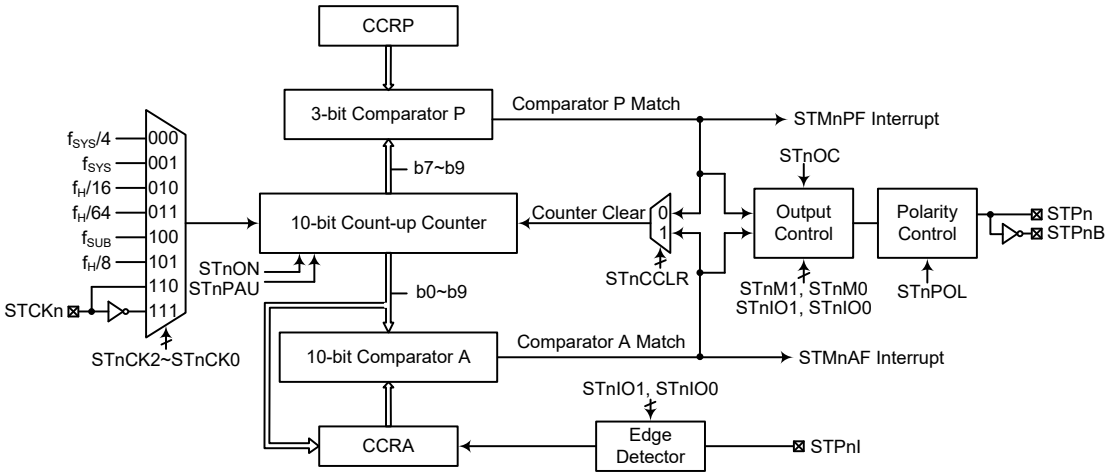

Note: 1. The STMn external pins are pin-shared with other functions, so before using the STMn function, ensure that the relevant pin-shared function registers have been set properly to enable the STMn pin function. The STCKn and STPnI pin, if used, must also be set as an input by setting the corresponding bits in the port control register.

2. The STPnB is the inverted signal of the STPn.

10-bit Standard Type TM Block Diagram (n=0)

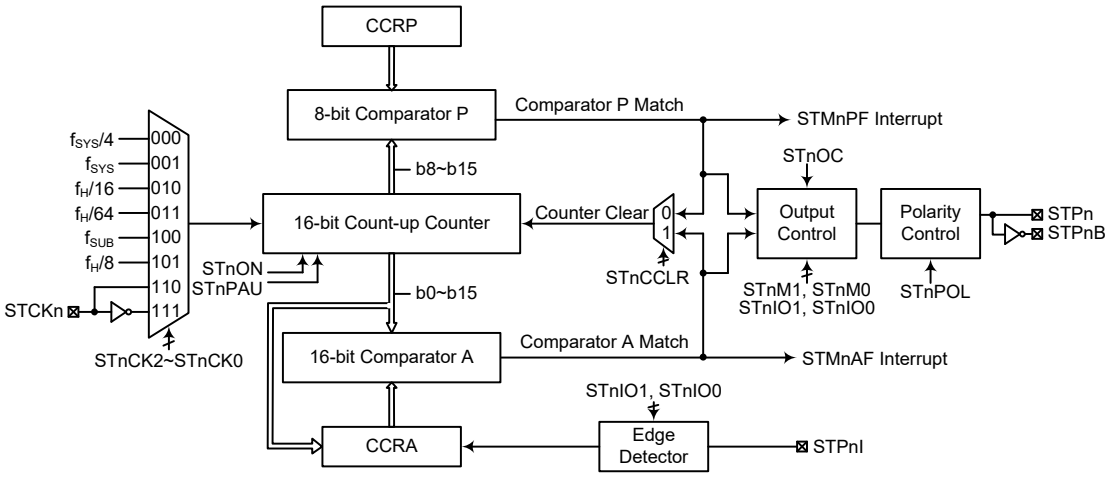

Note: 1. The STMn external pins are pin-shared with other functions, so before using the STMn function, ensure that the relevant pin-shared function registers have been set properly to enable the STMn pin function. The STCKn and STPnI pin, if used, must also be set as an input by setting the corresponding bits in the port control register.

2. The STPnB is the inverted signal of the STPn.

16-bit Standard Type TM Block Diagram (n=1)

Standard TM Operation

The size of Standard Type TM is 10/16-bit wide and its core is a 10/16-bit count-up counter which is driven by a user selectable internal or external clock source. There are also two internal comparators with the names, Comparator A and Comparator P. These comparators will compare the value in the counter with CCRP and CCRA registers. The CCRP comparator is 3/8-bit wide whose value is compared with the highest 3 or 8 bits in the counter while the CCRA is the 10/16 bits and therefore compares all counter bits.

The only way of changing the value of the 10/16-bit counter using the application program, is to clear the counter by changing the STnON bit from low to high. The counter will also be cleared automatically by a counter overflow or a compare match with one of its associated comparators. When these conditions occur, an STMn interrupt signal will also usually be generated. The Standard Type TM can operate in a number of different operational modes, can be driven by different clock sources including an input pin and can also control two output pins. All operating setup conditions are selected using relevant internal registers.

Standard Type TM Register Description

Overall operation of the Standard TM is controlled using a series of registers. A read only register pair exists to store the internal counter 10/16-bit value, while a read/write register pair exists to store the internal 10/16-bit CCRA value. The STMnRP register for the 16-bit STM is used to store the 8-bit CCRP value. The remaining two registers are control registers which setup the different operating and control modes.

Register Name	Bit							
	7	6	5	4	3	2	1	0
STMnC0	STnPAU	STnCK2	STnCK1	STnCK0	STnON	STnRP2	STnRP1	STnRP0
STMnC1	STnM1	STnM0	STnIO1	STnIO0	STnOC	STnPOL	STnDPX	STnCCLR
STMnDL	D7	D6	D5	D4	D3	D2	D1	D0
STMnDH	—	—	—	—	—	—	D9	D8
STMnAL	D7	D6	D5	D4	D3	D2	D1	D0
STMnAH	—	—	—	—	—	—	D9	D8

10-bit Standard TM Register List (n=0)

Register Name	Bit							
	7	6	5	4	3	2	1	0
STMnC0	STnPAU	STnCK2	STnCK1	STnCK0	STnON	—	—	—
STMnC1	STnM1	STnM0	STnIO1	STnIO0	STnOC	STnPOL	STnDPX	STnCCLR
STMnDL	D7	D6	D5	D4	D3	D2	D1	D0
STMnDH	D15	D14	D13	D12	D11	D10	D9	D8
STMnAL	D7	D6	D5	D4	D3	D2	D1	D0
STMnAH	D15	D14	D13	D12	D11	D10	D9	D8
STMnRP	D7	D6	D5	D4	D3	D2	D1	D0

16-bit Standard TM Register List (n=1)

• **STMnC0 Register (n=0)**

Bit	7	6	5	4	3	2	1	0
Name	STnPAU	STnCK2	STnCK1	STnCK0	STnON	STnRP2	STnRP1	STnRP0
R/W	R/W	R/W	R/W	R/W	R/W	R/W	R/W	R/W
POR	0	0	0	0	0	0	0	0

Bit 7 **STnPAU**: STMn Counter Pause control
0: Run
1: Pause

The counter can be paused by setting this bit high. Clearing the bit to zero restores normal counter operation. When in a Pause condition the STMn will remain powered up and continue to consume power. The counter will retain its residual value when this bit changes from low to high and resume counting from this value when the bit changes to a low value again.

Bit 6~4 **STnCK2~STnCK0**: Select STMn Counter clock
000: $f_{SYS}/4$
001: f_{SYS}
010: $f_H/16$
011: $f_H/64$
100: f_{SUB}
101: f_{SUB}
110: STCKn rising edge clock
111: STCKn falling edge clock

These three bits are used to select the clock source for the STMn. The external pin clock source can be chosen to be active on the rising or falling edge. The clock source f_{SYS} is the system clock, while f_H and f_{SUB} are other internal clocks, the details of which can be found in the oscillator section.

Bit 3 **STnON**: STMn Counter On/Off control
0: Off
1: On

This bit controls the overall on/off function of the STMn. Setting the bit high enables the counter to run while clearing the bit disables the STMn. Clearing this bit to zero will stop the counter from counting and turn off the STMn which will reduce its power consumption. When the bit changes state from low to high the internal counter value will be reset to zero, however when the bit changes from high to low, the internal counter will retain its residual value until the bit returns high again. If the STMn is in the Compare Match Output Mode, PWM Output Mode or Single Pulse Mode then the STMn output pin will be reset to its initial condition, as specified by the STnOC bit, when the STnON bit changes from low to high.

Bit 2~0 **STnRP2~STnRP0**: STMn CCRP 3-bit register, compared with the STMn Counter bit 9 ~ bit 7

Comparator P Match Period=
000: 1024 STMn clocks
001: 128 STMn clocks
010: 256 STMn clocks
011: 384 STMn clocks
100: 512 STMn clocks
101: 640 STMn clocks
110: 768 STMn clocks
111: 896 STMn clocks

These three bits are used to setup the value on the internal CCRP 3-bit register, which are then compared with the internal counter's highest three bits. The result of this comparison can be selected to clear the internal counter if the STnCCLR bit is set to zero. Setting the STnCCLR bit to zero ensures that a compare match with the CCRP values will reset the internal counter. As the CCRP bits are only compared with the highest three counter bits, the compare values exist in 128 clock cycle multiples. Clearing all three bits to zero is in effect allowing the counter to overflow at its maximum value.

• **STMnC0 Register (n=1)**

Bit	7	6	5	4	3	2	1	0
Name	STnPAU	STnCK2	STnCK1	STnCK0	STnON	—	—	—
R/W	R/W	R/W	R/W	R/W	R/W	—	—	—
POR	0	0	0	0	0	—	—	—

Bit 7 **STnPAU**: STMn Counter Pause control
0: Run
1: Pause

The counter can be paused by setting this bit high. Clearing the bit to zero restores normal counter operation. When in a Pause condition the STMn will remain powered up and continue to consume power. The counter will retain its residual value when this bit changes from low to high and resume counting from this value when the bit changes to a low value again.

Bit 6~4 **STnCK2~STnCK0**: Select STMn Counter clock
000: $f_{SYS}/4$
001: f_{SYS}
010: $f_H/16$
011: $f_H/64$
100: f_{SUB}
101: f_{SUB}
110: STCKn rising edge clock
111: STCKn falling edge clock

These three bits are used to select the clock source for the STMn. The external pin clock source can be chosen to be active on the rising or falling edge. The clock source f_{SYS} is the system clock, while f_H and f_{SUB} are other internal clocks, the details of which can be found in the oscillator section.

Bit 3 **STnON**: STMn Counter On/Off control
0: Off
1: On

This bit controls the overall on/off function of the STMn. Setting the bit high enables the counter to run while clearing the bit disables the STMn. Clearing this bit to zero will stop the counter from counting and turn off the STMn which will reduce its power consumption. When the bit changes state from low to high the internal counter value will be reset to zero, however when the bit changes from high to low, the internal counter will retain its residual value until the bit returns high again. If the STMn is in the Compare Match Output Mode, PWM Output Mode or Single Pulse Mode then the STMn output pin will be reset to its initial condition, as specified by the STnOC bit, when the STnON bit changes from low to high.

Bit 2~0 Unimplemented, read as “0”

• **STMnC1 Register (n=0~1)**

Bit	7	6	5	4	3	2	1	0
Name	STnM1	STnM0	STnIO1	STnIO0	STnOC	STnPOL	STnDPX	STnCCLR
R/W	R/W	R/W	R/W	R/W	R/W	R/W	R/W	R/W
POR	0	0	0	0	0	0	0	0

Bit 7~6 **STnM1~STnM0**: Select STMn Operating Mode
00: Compare Match Output Mode
01: Capture Input Mode
10: PWM Output Mode or Single Pulse Output Mode
11: Timer/Counter Mode

These bits setup the required operating mode for the STMn. To ensure reliable operation the STMn should be switched off before any changes are made to the STnM1 and STnM0 bits. In the Timer/Counter Mode, the STMn output pin state is undefined.

Bit 5~4 **STnIO1~STnIO0**: Select STMn external pin function

Compare Match Output Mode
00: No change
01: Output low
10: Output high
11: Toggle output

PWM Output Mode/Single Pulse Output Mode
00: PWM output inactive state
01: PWM output active state
10: PWM output
11: Single Pulse Output

Capture Input Mode
00: Input capture at rising edge of STPnI
01: Input capture at falling edge of STPnI
10: Input capture at both rising/falling edge of STPnI
11: Input capture disabled

Timer/Counter Mode
Unused

These two bits are used to determine how the STMn external pin changes state when a certain condition is reached. The function that these bits select depends upon in which mode the STMn is running.

In the Compare Match Output Mode, the STnIO1 and STnIO0 bits determine how the STMn output pin changes state when a compare match occurs from the Comparator A. The STMn output pin can be setup to switch high, switch low or to toggle its present state when a compare match occurs from the Comparator A. When the bits are both zero, then no change will take place on the output. The initial value of the STMn output pin should be setup using the STnOC bit in the STMnC1 register. Note that the output level requested by the STnIO1 and STnIO0 bits must be different from the initial value setup using the STnOC bit otherwise no change will occur on the STMn output pin when a compare match occurs. After the STMn output pin changes state, it can be reset to its initial level by changing the level of the STnON bit from low to high.

In the PWM Output Mode, the STnIO1 and STnIO0 bits determine how the STMn output pin changes state when a certain compare match condition occurs. The PWM output function is modified by changing these two bits. It is necessary to change the values of the STnIO1 and STnIO0 bits only after the STMn has been switched off. Unpredictable PWM outputs will occur if the STnIO1 and STnIO0 bits are changed when the STMn is running.

Bit 3 **STnOC**: STMn STPn Output control

Compare Match Output Mode
0: Initial low
1: Initial high

PWM Output Mode/Single Pulse Output Mode
0: Active low
1: Active high

This is the output control bit for the STMn output pin. Its operation depends upon whether STMn is being used in the Compare Match Output Mode or in the PWM Output Mode/Single Pulse Output Mode. It has no effect if the STMn is in the Timer/Counter Mode. In the Compare Match Output Mode it determines the logic level of the STMn output pin before a compare match occurs. In the PWM output Mode it determines if the PWM signal is active high or active low. In the Single Pulse Output Mode it determines the logic level of the STMn output pin when the STnON bit changes from low to high.

Bit 2 **STnPOL**: STMn STPn Output polarity control
0: Non-invert
1: Invert
This bit controls the polarity of the STPn output pin. When the bit is set high the STMn output pin will be inverted and not inverted when the bit is zero. It has no effect if the STMn is in the Timer/Counter Mode.

Bit 1 **STnDPX**: STMn PWM duty/period control
0: CCRP – period; CCRA – duty
1: CCRP – duty; CCRA – period
This bit determines which of the CCRA and CCRP registers are used for period and duty control of the PWM waveform.

Bit 0 **STnCCLR**: STMn Counter Clear condition selection
0: Comparator P match
1: Comparator A match
This bit is used to select the method which clears the counter. Remember that the Standard TM contains two comparators, Comparator A and Comparator P, either of which can be selected to clear the internal counter. With the STnCCLR bit set high, the counter will be cleared when a compare match occurs from the Comparator A. When the bit is low, the counter will be cleared when a compare match occurs from the Comparator P or with a counter overflow. A counter overflow clearing method can only be implemented if the CCRP bits are all cleared to zero. The STnCCLR bit is not used in the PWM Output, Single Pulse Output or Capture Input Mode.

• STMnDL Register (n=0~1)

Bit	7	6	5	4	3	2	1	0
Name	D7	D6	D5	D4	D3	D2	D1	D0
R/W	R	R	R	R	R	R	R	R
POR	0	0	0	0	0	0	0	0

Bit 7~0 **D7~D0**: STMn Counter Low Byte Register bit 7 ~ bit 0
STMn 10/16-bit Counter bit 7 ~ bit 0

• STMnDH Register (n=0)

Bit	7	6	5	4	3	2	1	0
Name	—	—	—	—	—	—	D9	D8
R/W	—	—	—	—	—	—	R	R
POR	—	—	—	—	—	—	0	0

Bit 7~2 Unimplemented, read as “0”

Bit 1~0 **D9~D8**: STMn Counter High Byte Register bit 1 ~ bit 0
STMn 10-bit Counter bit 9 ~ bit 8

• STMnDH Register (n=1)

Bit	7	6	5	4	3	2	1	0
Name	D15	D14	D13	D12	D11	D10	D9	D8
R/W	R	R	R	R	R	R	R	R
POR	0	0	0	0	0	0	0	0

Bit 7~0 **D15~D8**: STMn Counter High Byte Register bit 7 ~ bit 0
STMn 16-bit Counter bit 15 ~ bit 8

• **STMnAL Register (n=0~1)**

Bit	7	6	5	4	3	2	1	0
Name	D7	D6	D5	D4	D3	D2	D1	D0
R/W	R/W	R/W	R/W	R/W	R/W	R/W	R/W	R/W
POR	0	0	0	0	0	0	0	0

Bit 7~0 **D7~D0**: STMn CCRA Low Byte Register bit 7 ~ bit 0
STMn 10/16-bit CCRA bit 7 ~ bit 0

• **STMnAH Register (n=0)**

Bit	7	6	5	4	3	2	1	0
Name	—	—	—	—	—	—	D9	D8
R/W	—	—	—	—	—	—	R/W	R/W
POR	—	—	—	—	—	—	0	0

Bit 7~2 Unimplemented, read as "0"

Bit 1~0 **D9~D8**: STMn CCRA High Byte Register bit 1 ~ bit 0
STMn 10-bit CCRA bit 9 ~ bit 8

• **STMnAH Register (n=1)**

Bit	7	6	5	4	3	2	1	0
Name	D15	D14	D13	D12	D11	D10	D9	D8
R/W	R/W	R/W	R/W	R/W	R/W	R/W	R/W	R/W
POR	0	0	0	0	0	0	0	0

Bit 7~0 **D15~D8**: STMn CCRA High Byte Register bit 7 ~ bit 0
STMn 16-bit CCRA bit 15 ~ bit 8

• **STMnRP Register (n=1)**

Bit	7	6	5	4	3	2	1	0
Name	D7	D6	D5	D4	D3	D2	D1	D0
R/W	R/W	R/W	R/W	R/W	R/W	R/W	R/W	R/W
POR	0	0	0	0	0	0	0	0

Bit 7~0 **D7~D0**: STMn CCRP 8-bit register, compared with the STMn counter bit 15 ~ bit 8
Comparator P match period=
0: 65536 STMn clocks
1~255: (1~255)×256 STMn clocks

These eight bits are used to setup the value on the internal CCRP 8-bit register, which are then compared with the internal counter's highest eight bits. The result of this comparison can be selected to clear the internal counter if the STnCCLR bit is set to zero. Setting the STnCCLR bit to zero ensures that a compare match with the CCRP values will reset the internal counter. As the CCRP bits are only compared with the highest eight counter bits, the compare values exist in 256 clock cycle multiples. Clearing all eight bits to zero is in effect allowing the counter to overflow at its maximum value.

Standard Type TM Operation Modes

The Standard Type TM can operate in one of five operating modes, Compare Match Output Mode, PWM Output Mode, Single Pulse Output Mode, Capture Input Mode or Timer/Counter Mode. The operating mode is selected using the STnM1 and STnM0 bits in the STMnC1 register.

Compare Match Output Mode

To select this mode, bits STnM1 and STnM0 in the STMnC1 register, should be set to 00 respectively. In this mode once the counter is enabled and running it can be cleared by three methods. These are a counter overflow, a compare match from Comparator A and a compare match from Comparator P. When the STnCCLR bit is low, there are two ways in which the counter can be cleared. One is when a compare match from Comparator P, the other is when the CCRP bits are all zero which allows the counter to overflow. Here both STMnAF and STMnPF interrupt request flags for Comparator A and Comparator P respectively, will both be generated.

If the STnCCLR bit in the STMnC1 register is high then the counter will be cleared when a compare match occurs from Comparator A. However, here only the STMnAF interrupt request flag will be generated even if the value of the CCRP bits is less than that of the CCRA registers. Therefore when STnCCLR is high no STMnPF interrupt request flag will be generated. In the Compare Match Output Mode, the CCRA can not be set to “0”.

If the CCRA bits are all zero, the counter will overflow when it reaches its maximum 10-bit, 3FF Hex, or 16-bit FFFF Hex, value, however here the STMnAF interrupt request flag will not be generated.

As the name of the mode suggests, after a comparison is made, the STMn output pin, will change state. The STMn output pin condition however only changes state when an STMnAF interrupt request flag is generated after a compare match occurs from Comparator A. The STMnPF interrupt request flag, generated from a compare match occurs from Comparator P, will have no effect on the STMn output pin. The way in which the STMn output pin changes state are determined by the condition of the STnIO1 and STnIO0 bits in the STMnC1 register. The STMn output pin can be selected using the STnIO1 and STnIO0 bits to go high, to go low or to toggle from its present condition when a compare match occurs from Comparator A. The initial condition of the STMn output pin, which is setup after the STnON bit changes from low to high, is setup using the STnOC bit. Note that if the STnIO1 and STnIO0 bits are zero then no pin change will take place.

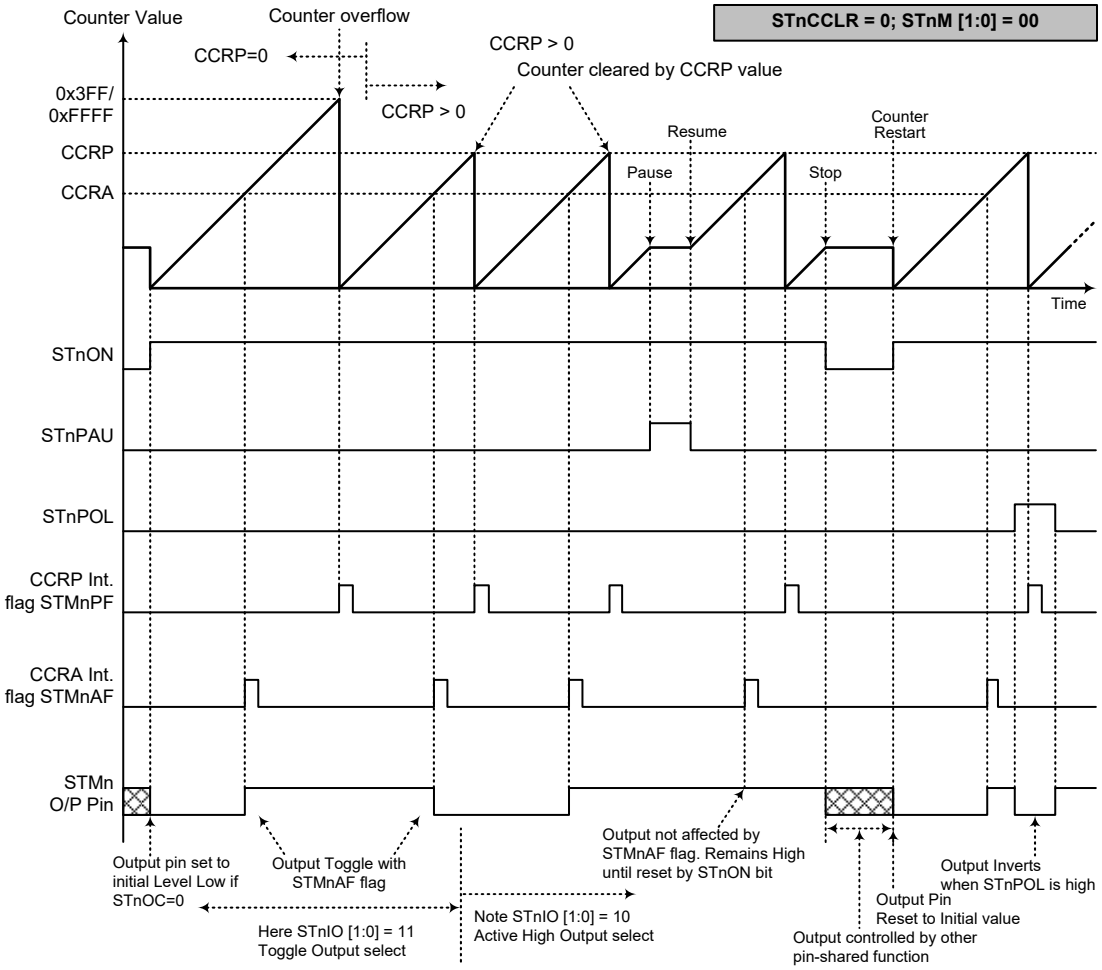

Compare Match Output Mode – STnCCLR=0

Note: 1. With STnCCLR=0, a Comparator P match will clear the counter
2. The STMn output pin is controlled only by the STMnAF flag
3. The output pin is reset to its initial state by an STnON bit rising edge
4. n=0 for 10-bit STM while n=1 for 16-bit STM

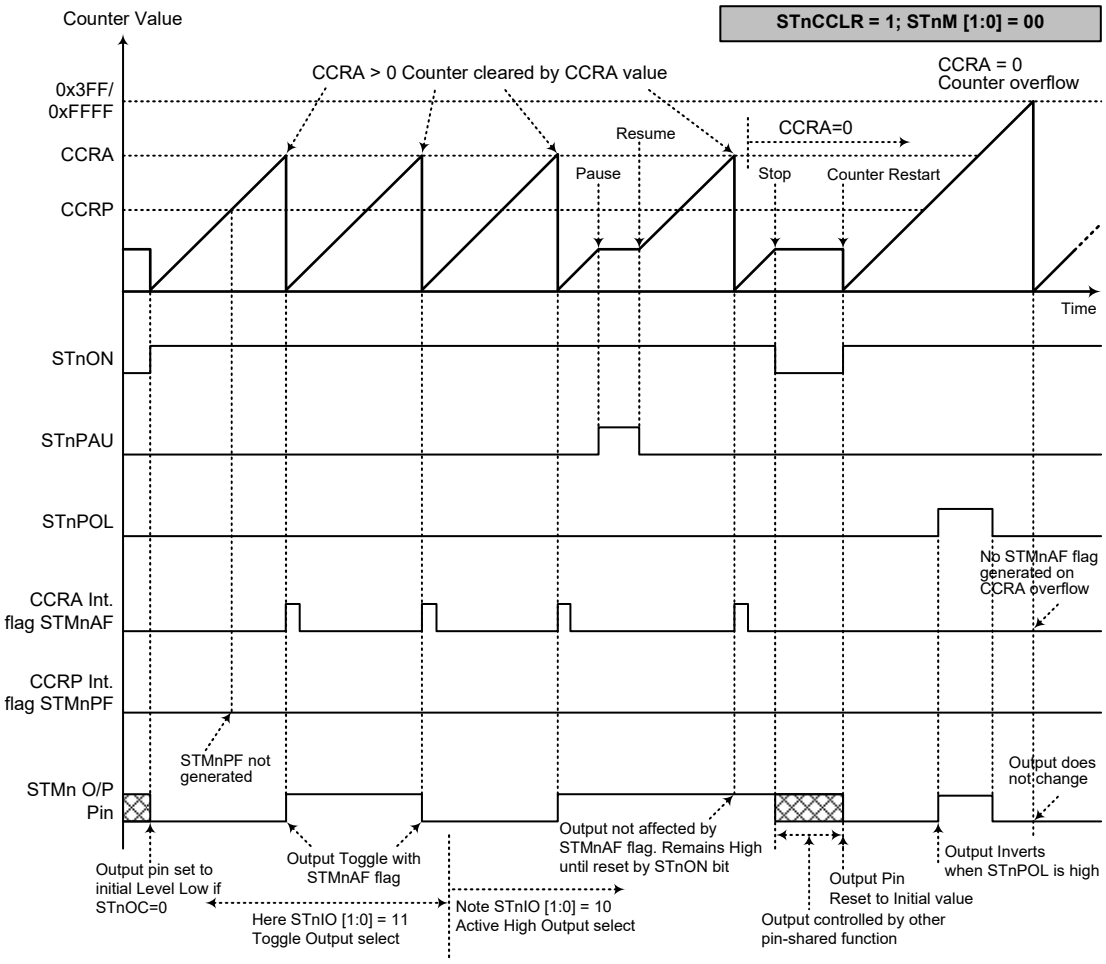

Compare Match Output Mode – STnCCLR=1

Note: 1. With STnCCLR=1, a Comparator A match will clear the counter
2. The STMn output pin is controlled only by the STMnAF flag
3. The output pin is reset to its initial state by an STnON bit rising edge
4. An STMnPF flag is not generated when STnCCLR=1
5. n=0 for 10-bit STM while n=1 for 16-bit STM

Timer/Counter Mode

To select this mode, bits STnM1 and STnM0 in the STMnC1 register should be set to 11 respectively. The Timer/Counter Mode operates in an identical way to the Compare Match Output Mode generating the same interrupt flags. The exception is that in the Timer/Counter Mode the STMn output pin is not used. Therefore the above description and Timing Diagrams for the Compare Match Output Mode can be used to understand its function. As the STMn output pin is not used in this mode, the pin can be used as a normal I/O pin or other pin-shared function.

PWM Output Mode

To select this mode, bits STnM1 and STnM0 in the STMnC1 register should be set to 10 respectively and also the STnIO1 and STnIO0 bits should be set to 10 respectively. The PWM function within the STMn is useful for applications which require functions such as motor control, heating control, illumination control etc. By providing a signal of fixed frequency but of varying duty cycle on the STMn output pin, a square wave AC waveform can be generated with varying equivalent DC RMS values.

As both the period and duty cycle of the PWM waveform can be controlled, the choice of generated waveform is extremely flexible. In the PWM Output Mode, the STnCCLR bit has no effect as the PWM period. Both of the CCRA and CCRP registers are used to generate the PWM waveform, one register is used to clear the internal counter and thus control the PWM waveform frequency, while the other one is used to control the duty cycle. Which register is used to control either frequency or duty cycle is determined using the STnDPX bit in the STMnC1 register. The PWM waveform frequency and duty cycle can therefore be controlled by the values in the CCRA and CCRP registers.

An interrupt flag, one for each of the CCRA and CCRP, will be generated when a compare match occurs from either Comparator A or Comparator P. The STnOC bit in the STMnC1 register is used to select the required polarity of the PWM waveform while the two STnIO1 and STnIO0 bits are used to enable the PWM output or to force the STMn output pin to a fixed high or low level. The STnPOL bit is used to reverse the polarity of the PWM output waveform.

- **10-bit STM, PWM Output Mode, Edge-aligned Mode, STnDPX=0**

CCRP	1~7	0
Period	CCRP×128	1024
Duty	CCRA	

If f_{SYS}=4MHz, STM clock source is $f_{SYS}/4$, CCRP=2 and CCRA=128,

The STM PWM output frequency=$(f_{SYS}/4)/(2\times128)=f_{SYS}/1024$=4kHz, duty=128/(2×128)=50%.

If the Duty value defined by the CCRA register is equal to or greater than the Period value, then the PWM output duty is 100%.

- **10-bit STM, PWM Output Mode, Edge-al igned Mode, STnDPX=1**

CCRP	1~7	0
Period	CCRA	
Duty	CCRP×128	1024

The PWM output period is determined by the CCRA register value together with the STMn clock while the PWM duty cycle is defined by the CCRP register value.

- **16-bit STM, PWM Output Mode, Edge-aligned Mode, STnDPX=0**

CCRP	1~255	0
Period	CCRP×256	65536
Duty	CCRA	

If f_{SYS}=4MHz, STM clock source is $f_{SYS}/4$, CCRP=2 and CCRA=128,

The STM PWM output frequency=$(f_{SYS}/4)/(2\times256)=f_{SYS}/2048$=2kHz, duty=128/(2×256)=25%.

If the Duty value defined by the CCRA register is equal to or greater than the Period value, then the PWM output duty is 100%.

- **16-bit STM, PWM Output Mode, Edge-aligned Mode, STnDPX=1**

CCRP	1~255	0
Period	CCRA	
Duty	CCRP×256	65536

The PWM output period is determined by the CCRA register value together with the STMn clock while the PWM duty cycle is defined by the CCRP register value.

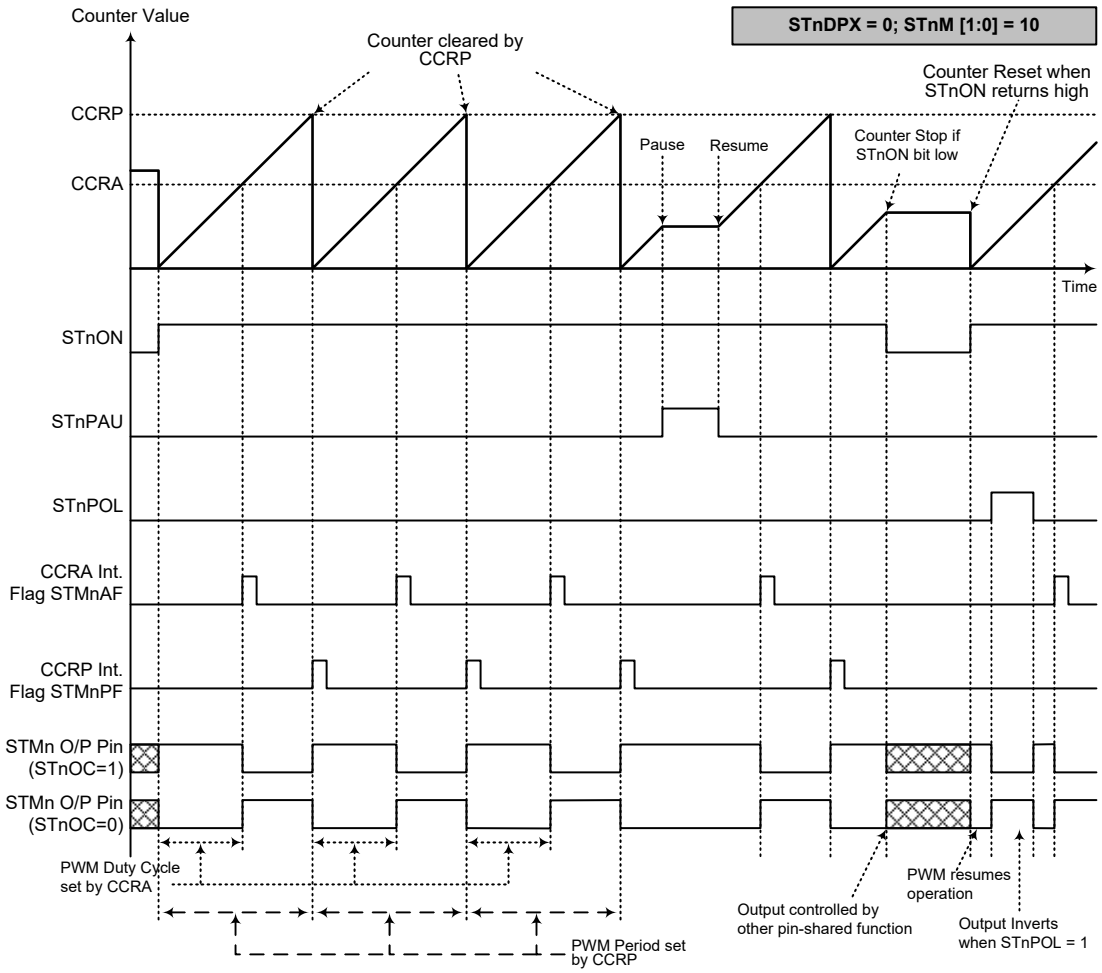

PWM Output Mode – STnDPX=0

Note: 1. Here STnDPX=0 – Counter cleared by CCRP
2. A counter clear sets the PWM Period
3. The internal PWM function continues running even when STnIO [1:0]=00 or 01
4. The STnCCLR bit has no influence on PWM operation
5. n=0 for 10-bit STM while n=1 for 16-bit STM

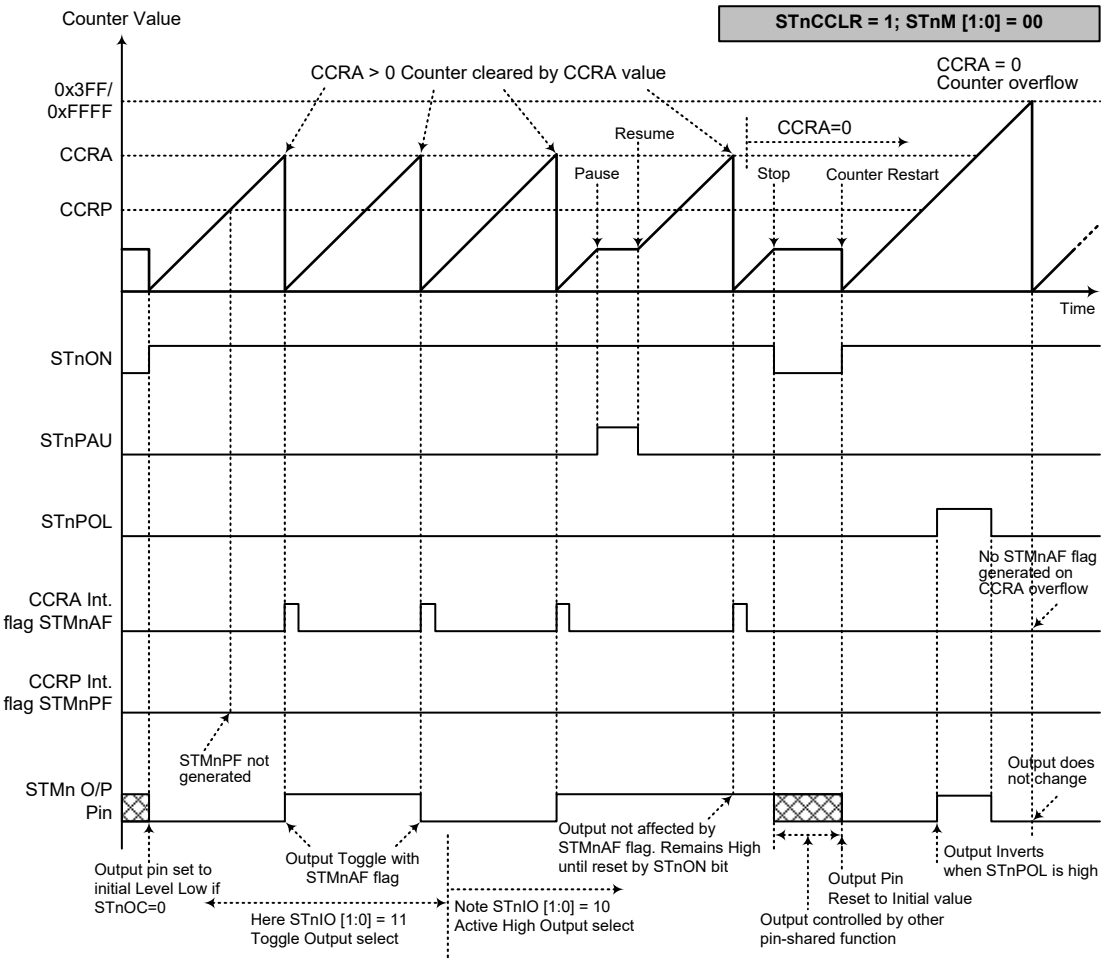

PWM Output Mode – STnDPX=1

Note: 1. Here STnDPX=1 – Counter cleared by CCRA
2. A counter clear sets the PWM Period
3. The internal PWM function continues running even when STnIO [1:0]=00 or 01
4. The STnCCLR bit has no influence on PWM operation
5. n=0 for 10-bit STM while n=1 for 16-bit STM

Single Pulse Output Mode

To select this mode, bits STnM1 and STnM0 in the STMnC1 register should be set to 10 respectively and also the STnIO1 and STnIO0 bits should be set to 11 respectively. The Single Pulse Output Mode, as the name suggests, will generate a single shot pulse on the STMn output pin.

The trigger for the pulse output leading edge is a low to high transition of the STnON bit, which can be implemented using the application program. However in the Single Pulse Output Mode, the STnON bit can also be made to automatically change from low to high using the external STCKn pin, which will in turn initiate the Single Pulse output. When the STnON bit transitions to a high level, the counter will start running and the pulse leading edge will be generated. The STnON bit should remain high when the pulse is in its active state. The generated pulse trailing edge will be generated when the STnON bit is cleared to zero, which can be implemented using the application program or when a compare match occurs from Comparator A.

However a compare match from Comparator A will also automatically clear the STnON bit and thus generate the Single Pulse output trailing edge. In this way the CCRA value can be used to control the pulse width. A compare match from Comparator A will also generate an STMn interrupt. The counter can only be reset back to zero when the STnON bit changes from low to high when the counter restarts. In the Single Pulse Output Mode CCRP is not used. The STnCCLR and STnDPX bits are not used in this mode.

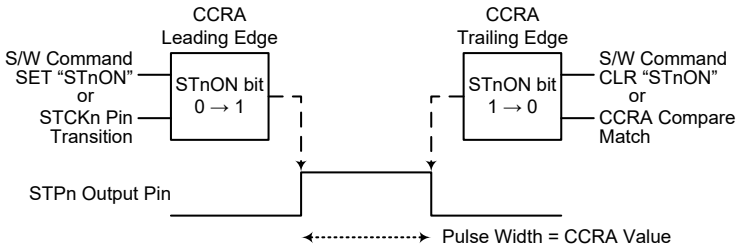

Single Pulse Generation

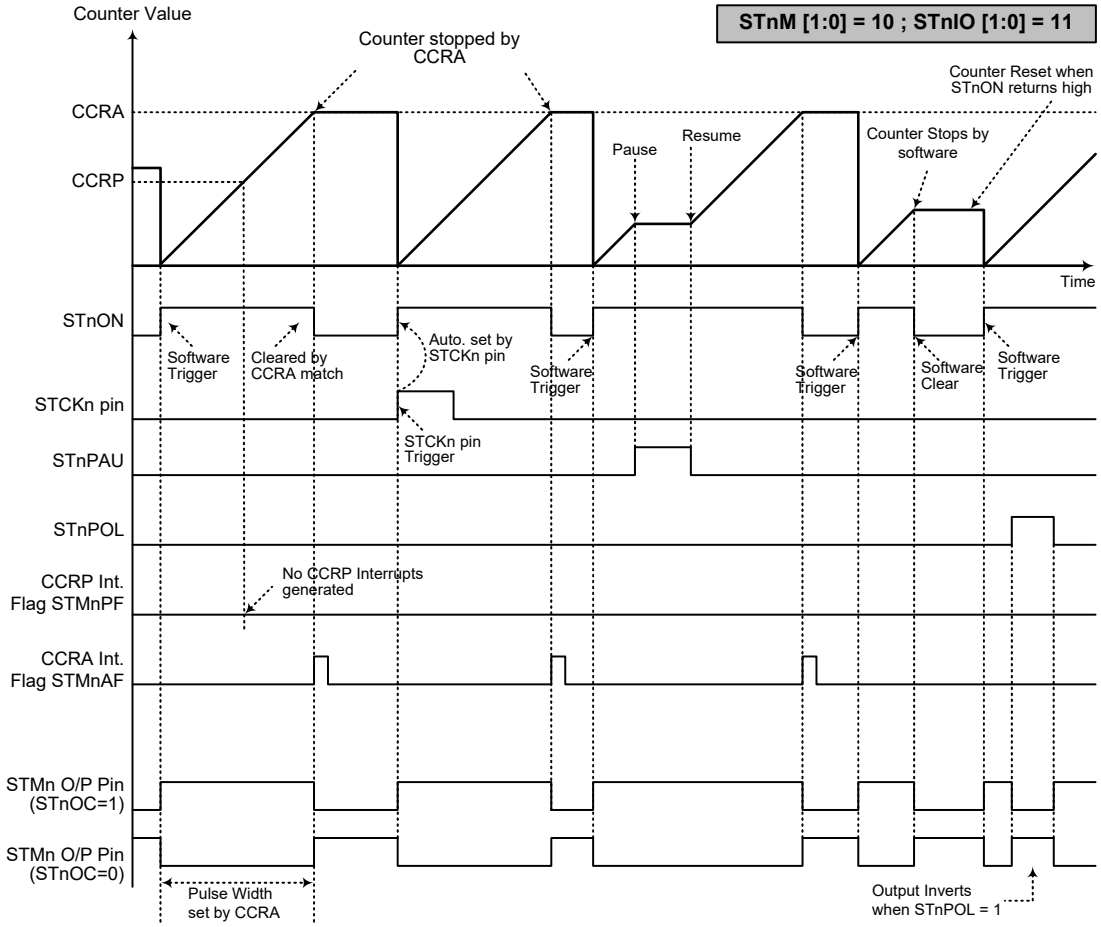

Single Pulse Output Mode

Note: 1. Counter stopped by CCRA
2. CCRP is not used
3. The pulse triggered by the STCKn pin or by setting the STnON bit high
4. An STCKn pin active edge will automatically set the STnON bit high
5. In the Single Pulse Output Mode, STnIO [1:0] must be set to “11” and cannot be changed
6. n=0 for 10-bit STM while n=1 for 16-bit STM

Capture Input Mode

To select this mode bits STnM1 and STnM0 in the STMnC1 register should be set to 01 respectively. This mode enables external signals to capture and store the present value of the internal counter and can therefore be used for applications such as pulse width measurements. The external signal is supplied on the STPnI pin, whose active edge can be a rising edge, a falling edge or both rising and falling edges; the active edge transition type is selected using the STnIO1 and STnIO0 bits in the STMnC1 register. The counter is started when the STnON bit changes from low to high which is initiated using the application program.

When the required edge transition appears on the STPnI pin the present value in the counter will be latched into the CCRA registers and an STMn interrupt generated. Irrespective of what events occur on the STPnI pin the counter will continue to free run until the STnON bit changes from high to low. When a CCRP compare match occurs the counter will reset back to zero; in this way the CCRP value can be used to control the maximum counter value. When a CCRP compare match occurs from Comparator P, an STMn interrupt will also be generated. Counting the number of overflow interrupt signals from the CCRP can be a useful method in measuring long pulse widths. The STnIO1 and STnIO0 bits can select the active trigger edge on the STPnI pin to be a rising edge, falling edge or both edge types. If the STnIO1 and STnIO0 bits are both set high, then no capture operation will take place irrespective of what happens on the STPnI pin, however it must be noted that the counter will continue to run. The STnCCLR and STnDPX bits are not used in this mode.

There are some considerations that should be noted. If the captured pulse width is less than 2 timer clock periods, it may be ignored by hardware. After the counter value is latched to the CCRA registers by an active capture edge, the STMnAF flag will be set high after 0.5 timer clock period. The delay time from the active capture edge received to the action of latching counter value to CCRA registers is less than 1.5 timer clock periods.

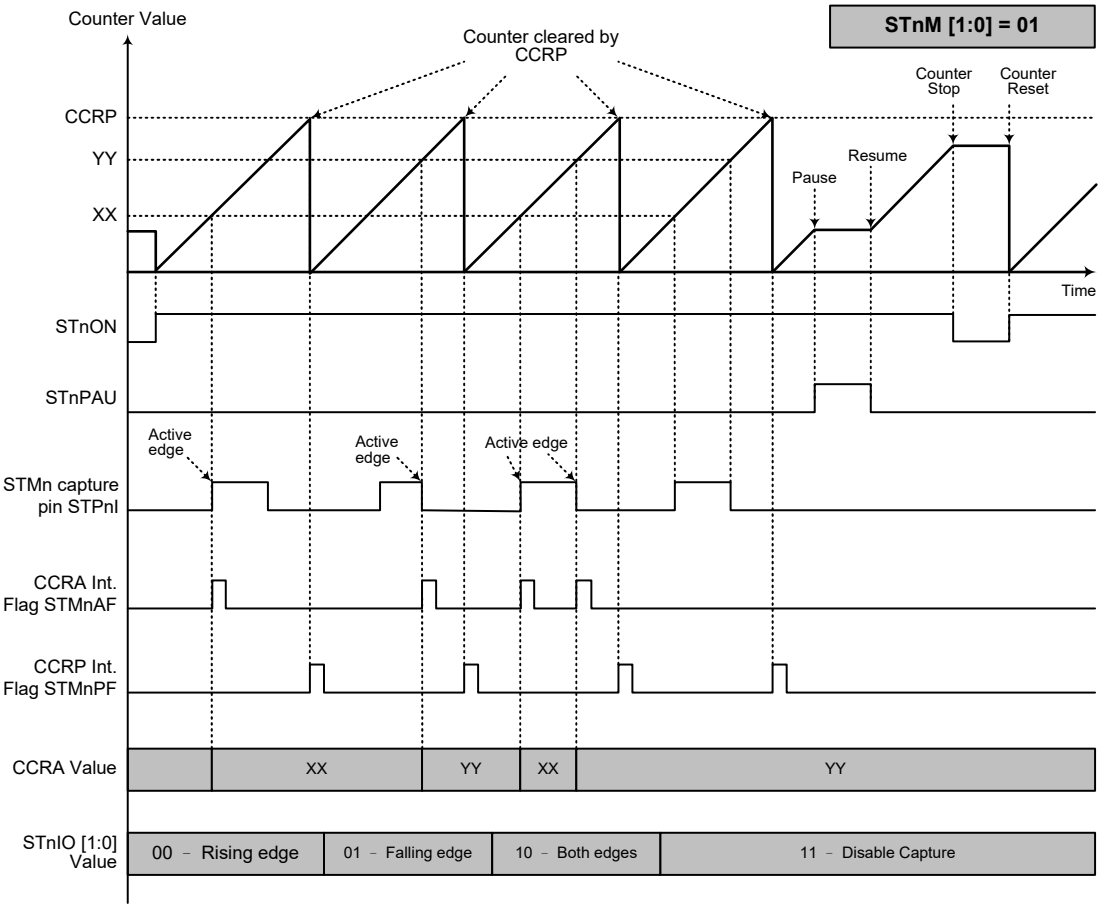

Capture Input Mode

Note: 1. STnM [1:0]=01 and active edge set by the STnIO[1:0] bits
2. An STMn Capture input pin active edge transfers the counter value to CCRA
3. STnCCLR bit not used
4. No output function – STnOC and STnPOL bits are not used
5. CCRP determines the counter value and the counter has a maximum count value when CCRP is equal to zero
6. The capture input mode cannot be used if the selected STM counter clock is not available
7. n=0 for 10-bit STM while n=1 for 16-bit STM

Analog to Digital Converter – ADC

The need to interface to real world analog signals is a common requirement for many electronic systems. However, to properly process these signals by a microcontroller, they must first be converted into digital signals by A/D converters. By integrating the A/D conversion electronic circuitry into the microcontroller, the need for external components is reduced significantly with the corresponding follow-on benefits of lower costs and reduced component space requirements.

A/D Converter Overview

The device contains a multi-channel analog to digital converter which can directly interface to external analog signals, such as that from sensors or other control signals and convert these signals directly into a 12-bit digital value. It also can convert the internal signals, such as the OPA2 output voltage, internal A/D converter power supply and internal PGA output voltage, into a 12-bit digital value. The external or internal analog signal to be converted is determined by the SAINS3~SAINS0 bits and SACS3~SACS0 bits. Note that when the internal analog signal is selected to be converted using the SAINS3~SAINS0 bits, the external channel analog input will automatically be switched off. More detailed information about the A/D input signal selection will be described in the "A/D Converter Input Signals" section.

External Input Channels	Internal Analog Signals	A/D Signal Select
AN0~AN10	20/40×A2P, V_{DD}, V_{VR}, $V_{DD}/2$, $V_{VR}/2$, $V_{DD}/4$, $V_{VR}/4$	SAINS3~SAINS0, SACS3~SACS0

The accompanying block diagram shows the internal structure of the A/D converter, together with its associated registers and control bits.

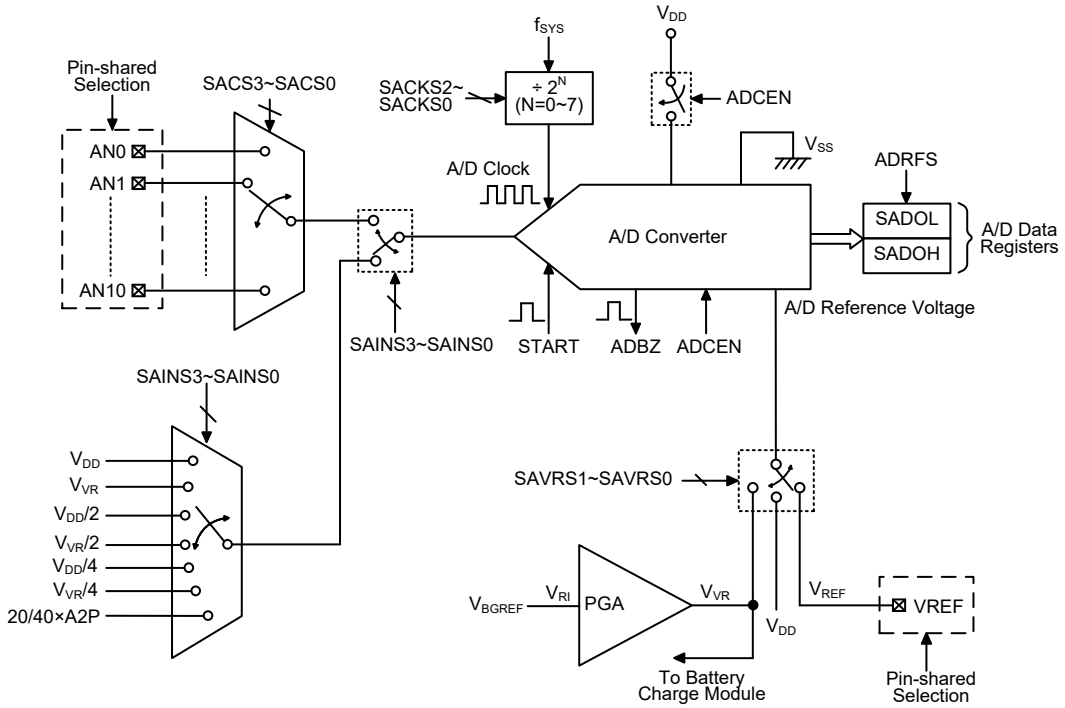

Note: 20/40×A2P is 20/40 times OPA2 positive input voltage signal. More details can be obtained in the Battery Charge Module section.

A/D Converter Structure

A/D Converter Register Description

Overall operation of the A/D converter is controlled using five registers. A read only register pair exists to store the A/D converter data 12-bit value. Theree registers, SADC0, SADC1 and SADC2, are the control registers which setup the operating and control function of the A/D converter.

Register Name	Bit							
	7	6	5	4	3	2	1	0
SADOL (ADRFS=0)	D3	D2	D1	D0	—	—	—	—
SADOL (ADRFS=1)	D7	D6	D5	D4	D3	D2	D1	D0
SADOH (ADRFS=0)	D11	D10	D9	D8	D7	D6	D5	D4
SADOH (ADRFS=1)	—	—	—	—	D11	D10	D9	D8
SADC0	START	ADBZ	ADCEN	ADRFS	SACS3	SACS2	SACS1	SACS0
SADC1	SAINS3	SAINS2	SAINS1	SAINS0	—	SACKS2	SACKS1	SACKS0
SADC2	—	—	—	—	SAVRS1	SAVRS0	—	—

A/D Converter Register List

A/D Converter Data Registers – SADOL, SADOH

As the device contains an internal 12-bit A/D converter, it requires two data registers to store the converted value. These are a high byte register, known as SADOH, and a low byte register, known as SADOL. After the conversion process takes place, these registers can be directly read by the microcontroller to obtain the digitised conversion value. As only 12 bits of the 16-bit register space is utilised, the format in which the data is stored is controlled by the ADRFS bit in the SADC0 register as shown in the accompanying table. D0~D11 are the A/D conversion result data bits. Any unused bits will be read as zero. Note that the A/D converter data registers contents will keep unchanged if the A/D converter is disabled.

ADRFS	SADOH								SADOL							
	7	6	5	4	3	2	1	0	7	6	5	4	3	2	1	0
0	D11	D10	D9	D8	D7	D6	D5	D4	D3	D2	D1	D0	0	0	0	0
1	0	0	0	0	D11	D10	D9	D8	D7	D6	D5	D4	D3	D2	D1	D0

A/D Converter Data Registers

A/D Converter Control Registers – SADC0, SADC1, SADC2

To control the function and operation of the A/D converter, three control registers known as SADC0, SADC1 and SADC2 are provided. These 8-bit registers define functions such as the selection of which analog signal is connected to the internal A/D converter, the digitised data format, the A/D clock source as well as controlling the start function and monitoring the A/D converter busy status. As the device contains only one actual analog to digital converter hardware circuit, each of the external and internal analog signals must be routed to the converter. The SAINS3~SAINS0 bits in the SADC1 register and SACS3~SACS0 bits in the SADC0 register are used to determine which analog signal derived from the external or internal signals will be connected to the A/D converter. The A/D converter also contains an amplifier, PGA, to generate the A/D converter internal reference voltage. The PGA is always enabled.

The relevant pin-shared function selection bits determine which pins on I/O Ports are used as analog inputs for the A/D converter input and which pins are not. When the pin is selected to be an A/D input, its original function whether it is an I/O or other pin-shared function will be removed. In addition, any internal pull-high resistor connected to the pin will be automatically removed if the pin is selected to be an A/D converter input.

• SADC0 Register

Bit	7	6	5	4	3	2	1	0
Name	START	ADBZ	ADCEN	ADRFS	SACS3	SACS2	SACS1	SACS0
R/W	R/W	R/W	R/W	R/W	R/W	R/W	R/W	R/W
POR	0	0	0	0	0	0	0	0

Bit 7 **START**: Start the A/D Conversion
0→1→0: Start
This bit is used to initiate an A/D conversion process. The bit is normally low but if set high and then cleared low again, the A/D converter will initiate a conversion process.

Bit 6 **ADBZ**: A/D Converter busy flag
0: No A/D conversion is in progress
1: A/D conversion is in progress
This read only flag is used to indicate whether the A/D conversion is in progress or not. When the START bit is set from low to high and then to low again, the ADBZ flag will be set to 1 to indicate that the A/D conversion is initiated. The ADBZ flag will be cleared to 0 after the A/D conversion is complete.

Bit 5 **ADCEN**: A/D Converter function enable control
0: Disable
1: Enable
This bit controls the A/D internal function. This bit should be set to one to enable the A/D converter. If the bit is set low, then the A/D converter will be switched off reducing the device power consumption. When the A/D converter function is disabled, the contents of the A/D data register pair known as SADOL and SADOH will be unchanged.

Bit 4 **ADRFS**: A/D conversion data format selection
0: A/D converter data format → SADOH=D [11:4]; SADOL=D [3:0]
1: A/D converter data format → SADOH=D [11:8]; SADOL=D [7:0]
This bit controls the format of the 12-bit converted A/D value in the two A/D data registers. Details are provided in the A/D converter data register section.

Bit 3~0 **SACS3~SACS0**: A/D converter external analog input channel selection
0000: AN0
0001: AN1
0010: AN2
0011: AN3
0100: AN4
0101: AN5
0110: AN6
0111: AN7
1000: AN8
1001: AN9
1010: AN10
1011~1111: Non-existed channel, the input will be floating

• **SADC1 Register**

Bit	7	6	5	4	3	2	1	0
Name	SAINS3	SAINS2	SAINS1	SAINS0	—	SACKS2	SACKS1	SACKS0
R/W	R/W	R/W	R/W	R/W	—	R/W	R/W	R/W
POR	0	0	0	0	—	0	0	0

Bit 7~4 **SAINS3~SAINS0**: A/D converter input signal selection
0000: External input – External analog channel input, ANn
0001: Internal input – Internal signal derived from V_{DD}
0010: Internal input – Internal signal derived from $V_{DD}/2$
0011: Internal input – Internal signal derived from $V_{DD}/4$
0100: External input – External analog channel input, ANn
0101: Internal input – Internal signal derived from PGA output V_{VR}
0110: Internal input – Internal signal derived from PGA output $V_{VR}/2$
0111: Internal input – Internal signal derived from PGA output $V_{VR}/4$
1000: Internal input – Internal OPA2 output voltage, 20/40×A2P
1001~1011: Unused, connected to ground
1100~1111: External input – External analog channel input, ANn

Care must be taken if the SAINS3~SAINS0 bits are set to "0001~0011", "0101~1000" to select the internal analog signal to be converted. When the internal analog signal is selected to be converted, the external channel signal input will automatically be switched off regardless of the SACS3~SACS0 bits value. It will prevent the external channel input from being connected together with the internal analog signal.

Bit 3 Unimplemented, read as "0"

Bit 2~0 **SACKS2~SACKS0**: A/D conversion clock source select
000: f_{SYS}
001: $f_{SYS}/2$
010: $f_{SYS}/4$
011: $f_{SYS}/8$
100: $f_{SYS}/16$
101: $f_{SYS}/32$
110: $f_{SYS}/64$
111: $f_{SYS}/128$

These three bits are used to select the clock source for the A/D converter.

• **SADC2 Register**

Bit	7	6	5	4	3	2	1	0
Name	—	—	—	—	SAVRS1	SAVRS0	—	—
R/W	—	—	—	—	R/W	R/W	—	—
POR	—	—	—	—	0	0	—	—

Bit 7~4 Unimplemented, read as "0"

Bit 3~2 **SAVRS1~SAVRS0**: A/D converter reference voltage select
00: Internal A/D converter power, V_{DD}
01: External VREF pin
1x: Internal PGA output voltage, V_{VR}

These bits are used to select the A/D converter reference voltage source. When the internal reference voltage source is selected, the reference voltage derived from the external VREF pin will automatically be switched off.

Bit 1~0 Unimplemented, read as "0"

A/D Converter Operation

The START bit in the SADC0 register is used to start the AD conversion. When the microcontroller sets this bit from low to high and then low again, an analog to digital conversion cycle will be initiated.

The ADBZ bit in the SADC0 register is used to indicate whether the analog to digital conversion process is in progress or not. This bit will be automatically set to 1 by the microcontroller after an A/D conversion is successfully initiated. When the A/D conversion is complete, the ADBZ bit will be cleared to 0. In addition, the corresponding A/D interrupt request flag will be set in the interrupt control register, and if the interrupts are enabled, an internal interrupt signal will be generated. This A/D internal interrupt signal will direct the program flow to the associated A/D internal interrupt address for processing. If the A/D internal interrupt is disabled, the microcontroller can poll the ADBZ bit in the SADC0 register to check whether it has been cleared as an alternative method of detecting the end of an A/D conversion cycle.

The clock source for the A/D converter, which originates from the system clock f_{SYS}, can be chosen to be either f_{SYS} or a subdivided version of f_{SYS}. The division ratio value is determined by the SACKS2~SACKS0 bits in the SADC1 register. Although the A/D clock source is determined by the system clock f_{SYS} and by bits SACKS2~SACKS0, there are some limitations on the maximum A/D clock source speed that can be selected. As the recommended range of permissible A/D clock period, t_{ADCK}, is from 0.5μs to 10μs, care must be taken for system clock frequencies. For example, if the system clock operates at a frequency of 8MHz, the SACKS2~SACKS0 bits should not be set to 000, 001 or 111. Doing so will give A/D clock periods that are less than the minimum A/D clock period or greater than the maximum A/D clock period which may result in inaccurate A/D conversion values. Refer to the following table for examples, where values marked with an asterisk * show where, special care must be taken, as the values may be exceed the specified A/D Clock Period range.

However, the recommended A/D clock period is from 1μs to 2μs if the input signal to be converted is the temperature sensor output voltage.

f_{SYS}	A/D Clock Period (t_{ADCK})							
	SACKS[2:0] =000 (f_{SYS})	SACKS[2:0] =001 ($f_{SYS}/2$)	SACKS[2:0] =010 ($f_{SYS}/4$)	SACKS[2:0] =011 ($f_{SYS}/8$)	SACKS[2:0] =100 ($f_{SYS}/16$)	SACKS[2:0] =101 ($f_{SYS}/32$)	SACKS[2:0] =110 ($f_{SYS}/64$)	SACKS[2:0] =111 ($f_{SYS}/128$)
1MHz	1μs	2μs	4μs	8μs	16μs *	32μs *	64μs *	128μs *
2MHz	500ns	1μs	2μs	4μs	8μs	16μs *	32μs *	64μs *
4MHz	250ns *	500ns	1μs	2μs	4μs	8μs	16μs *	32μs *
8MHz	125ns *	250ns *	500ns	1μs	2μs	4μs	8μs	16μs *
12MHz	83ns *	167ns *	333ns *	667ns	1.33μs	2.67μs	5.33μs	10.67μs *
16MHz	62.5ns *	125ns *	250ns *	500ns	1μs	2μs	4μs	8μs

A/D Clock Period Examples

Controlling the power on/off function of the A/D converter circuitry is implemented using the ADCEN bit in the SADC0 register. This bit must be set high to power on the A/D converter. When the ADCEN bit is set high to power on the A/D converter internal circuitry, a certain delay as indicated in the timing diagram must be allowed before an A/D conversion is initiated. Even if no pins are selected for use as A/D inputs, if the ADCEN bit is high, then some power will still be consumed. In power conscious applications it is therefore recommended that the ADCEN is set low to reduce power consumption when the A/D converter function is not being used.

A/D Converter Reference Voltage

The actual reference voltage supply to the A/D Converter can be supplied from the positive power supply, V_{DD}, an external reference source supplied on pin VREF or an internal reference voltage V_{VR} determined by the SAVRS1~SAVRS0 bits in the SADC2 register. The internal reference voltage is amplified through an amplifier, PGA, which is always enabled. The PGA input comes from the internal Bandgap reference voltage, V_{BGREF}. As the VREF pin is pin-shared with other functions, when the VREF pin is selected as the reference voltage pin, the VREF pin-shared function selection bits should first be properly configured to disable other pin-shared functions. However, if the internal reference signal is selected as the reference source, the external reference input from the VREF pin will automatically be switched off by hardware.

Note that the internal Bandgap reference circuit is always enabled. A specific start-up time is necessary for the Bandgap circuit to become stable and accurate.

The analog input values must be allowed to exceed the value of the selected A/D reference voltage.

SAVRS1~SAVRS0	Reference	Description
00	V_{DD}	Internal A/D converter power supply voltage
01	VREF pin	External A/D converter reference pin VREF
10, 11	V_{VR}	Internal A/D converter PGA output voltage

A/D Converter Reference Voltage Selection

A/D Converter Input Signals

All of the external A/D analog input pins are pin-shared with the I/O pins as well as other functions. The corresponding pin-shared function selection bits in the PxS1 and PxS0 registers, determine whether the external input pins are setup as A/D converter analog channel inputs or whether they have other functions. If the corresponding pin is setup to be an A/D converter analog channel input, the original pin function will be disabled. In this way, pins can be changed under program control to change their function between A/D inputs and other functions. All pull-high resistors, which are setup through register programming, will be automatically disconnected if the pins are setup as A/D inputs. Note that it is not necessary to first setup the A/D pin as an input in the port control register to enable the A/D input as when the relevant A/D input function selection bits enable an A/D input, the status of the port control register will be overridden.

When the SAINS3~SAINS0 bits are set to the value of “0x01”, “0x10”, “0x11” or “1000”, the internal analog signal will be selected. If the internal analog signal is selected to be converted, the external channel signal input will automatically be switched off regardless of the SACS3~SACS0 bits value. It will prevent the external channel input from being connected together with the internal analog signal.

SAINS [3:0]	SACS [3:0]	Input Signals	Description
0000, 0100, 1100~1111	0000~1010	AN0~AN10	External channel analog input ANn
	1011~1111	—	Floating, no external channel is selected
0001	xxxx	V_{DD}	Internal A/D converter power supply voltage V_{DD}
0010	xxxx	$V_{DD}/2$	Internal A/D converter power supply voltage $V_{DD}/2$
0011	xxxx	$V_{DD}/4$	Internal A/D converter power supply voltage $V_{DD}/4$
0101	xxxx	V_{VR}	Internal A/D converter PGA output V_{VR}
0110	xxxx	$V_{VR}/2$	Internal A/D converter PGA output $V_{VR}/2$
0111	xxxx	$V_{VR}/4$	Internal A/D converter PGA output $V_{VR}/4$
1000	xxxx	20/40×A2P	20/40 times OPA2 positive input voltage signal
1001~1011	xxxx	—	Unused, connected to ground

A/D Converter Input Signal Selection

Conversion Rate and Timing Diagram

A complete A/D conversion contains two parts, data sampling and data conversion. The data sampling which is defined as t_{ADS} takes 4 A/D clock periods and the data conversion takes 12 A/D clock periods. Therefore a total of 16 A/D clock periods for an analog signal A/D conversion which is defined as t_{ADC} are necessary.

Maximum single A/D conversion rate=1/(A/D clock period×16)

The accompanying diagram shows graphically the various stages involved in an analog to digital conversion process and its associated timing. After an A/D conversion process has been initiated by the application program, the microcontroller internal hardware will begin to carry out the conversion, during which time the program can continue with other functions. The time taken for the A/D conversion is 16 t_{ADCK} where t_{ADCK} is equal to the A/D clock period.

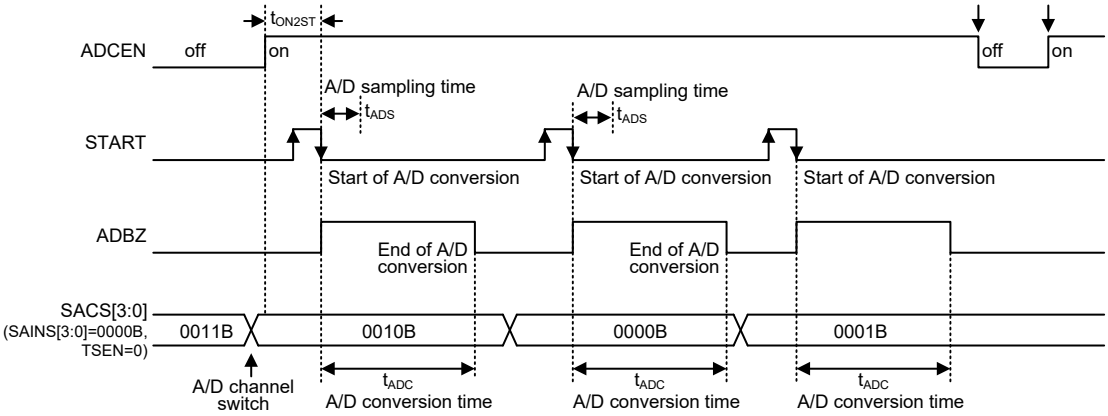

A/D Conversion Timing – External Channel Input

Summary of A/D Conversion Steps

The following summarises the individual steps that should be executed in order to implement an A/D conversion process.

- Step 1
  Select the required A/D conversion clock by properly programming the SACKS2~SACKS0 bits in the SADC1 register.
- Step 2
  Enable the A/D converter by setting the ADCEN bit in the SADC0 register to one.
- Step 3
  Select which signal is to be connected to the internal A/D converter by correctly configuring the SACS3~SACS0 bits and SAINS3~SAINS0 bits.
  Selecting the external channel input to be converted, go to Step 4.
  Selecting the internal analog signal to be converted, go to Step 5.
- Step 4
  If the SAINS3~SAINS0 bits are 0000, 0100 or 11xx, the external channel input can be selected. The desired external channel input is selected by configuring the SACS3~SACS0. When the A/D input signal comes from the external channel input, the corresponding pin should be configured as an A/D input function by selecting the relevant pin-shared function control bits. Then go to Step 6.

- Step 5
  If the SAINS3~SAINS0 bits are set to 0x01, 0x10, 0x11 or 1000, the relevant internal analog signal will be selected. When the internal analog signal is selected to be converted, the external channel analog input will automatically be disconnected. Then go to Step 6.
- Step 6
  Select the A/D converter reference voltage source by configuring the SAVRS1~SAVRS0 bits.
- Step 7
  Select the A/D converter output data format by configuring the ADRFS bit.
- Step 8
  If A/D conversion interrupt is used, the interrupt control registers must be correctly configured to ensure the A/D interrupt function is active. The master interrupt control bit, EMI, and the A/D conversion interrupt control bit, ADE, must both be set high in advance.
- Step 9
  The A/D conversion procedure can now be initialized by setting the START bit from low to high and then low again.
- Step 10
  If A/D conversion is in progress, the ADBZ flag will be set high. After the A/D conversion process is complete, the ADBZ flag will go low and then the output data can be read from SADOH and SADOL registers.

Note: When checking for the end of the conversion process, if the method of polling the ADBZ bit in the SADC0 register is used, the interrupt enable step above can be omitted.

Programming Considerations

During microcontroller operations where the A/D converter is not being used, the A/D internal circuitry can be switched off to reduce power consumption by clearing bit ADCEN to 0 in the SADC0 register. When this happens, the internal A/D converter circuits will not consume power irrespective of what analog voltage is applied to their input lines. If the A/D converter input lines are used as normal I/Os, then care must be taken as if the input voltage is not at a valid logic level, then this may lead to some increase in power consumption.

A/D Converter Transfer Function

As the device contains a 12-bit A/D converter, its full-scale converted digitised value is equal to FFFH. Since the full-scale analog input value is equal to the actual A/D converter reference voltage, V_{REF}, this gives a single bit analog input value of reference voltage value divided by 4096.

$$1\ \text{LSB} = V_{REF}/4096$$

The A/D Converter input voltage value can be calculated using the following equation:

$$\text{A/D input voltage} = \text{A/D output digital value} \times V_{REF}/4096$$

The diagram shows the ideal transfer function between the analog input value and the digitised output value for the A/D converter. Except for the digitised zero value, the subsequent digitised values will change at a point 0.5 LSB below where they would change without the offset, and the last full scale digitised value will change at a point 1.5 LSB below the V_{REF} level.

Note that here the V_{REF} voltage is the actual A/D converter reference voltage determined by the SAVRS1~SAVRS0 bits.

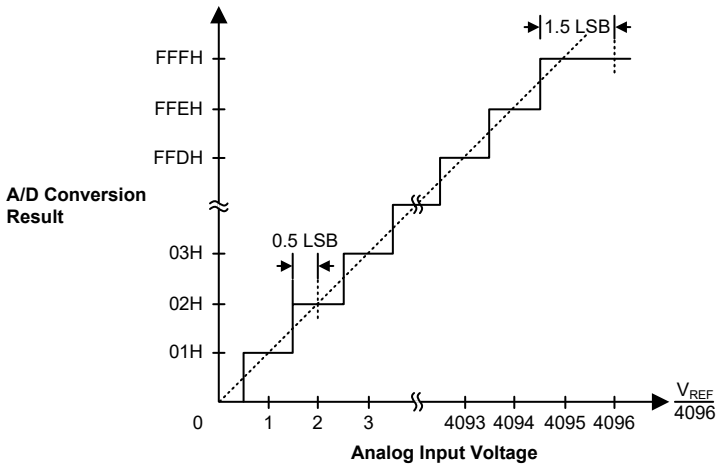

Ideal A/D Transfer Function

A/D Programming Examples

The following two programming examples illustrate how to setup and implement an A/D conversion. In the first example, the method of polling the ADBZ bit in the SADC0 register is used to detect when the conversion cycle is complete, whereas in the second example, the A/D interrupt is used to determine when the conversion is complete.

Example: using an ADBZ polling method to detect the end of conversion

```
clr ADE                ; disable ADC interrupt
mov a,03H
mov SADC1,a            ; select A/D input signal from external channel, fSYS/8 as A/D clock
mov a,00H              ; select VDD as the A/D reference voltage source
mov SADC2,a
mov a,03H              ; setup PBS0 to configure pin AN0
mov PBS0,a
mov a,20H              ; enable A/D converter and select AN0 as the A/D external channel
                       ; input
mov SADC0,a
:
start_conversion:
clr START              ; high pulse on start bit to initiate conversion
set START              ; reset A/D
clr START              ; start A/D
:
polling_EOC:
sz  ADBZ               ; poll the SADC0 register ADBZ bit to detect end of A/D conversion
jmp polling_EOC        ; continue polling
:
mov a,SADOL            ; read low byte conversion result value
mov SADOL_buffer,a     ; save result to user defined register
mov a,SADOH            ; read high byte conversion result value
mov SADOH_buffer,a     ; save result to user defined register
:
jmp start_conversion   ; start next A/D conversion
```

Example: using the interrupt method to detect the end of conversion

```
clr ADE                ; disable ADC interrupt
mov a,03H
mov SADC1,a            ; select A/D input signal from external channel, fSYS/8 as A/D clock
mov a,00H              ; select VDD as the A/D reference voltage source
mov SADC2,a
mov a,03h              ; setup PBS0 to configure pin AN0
mov PBS0,a
mov a,20h
mov SADC0,a            ; enable A/D converter and select AN0 as the A/D external channel
                       ; input
:
Start_conversion:
clr START              ; high pulse on START bit to initiate conversion
set START              ; reset A/D
clr START              ; start A/D
clr ADF                ; clear ADC interrupt request flag
set ADE                ; enable ADC interrupt
set EMI                ; enable global interrupt
:
:
ADC_ISR:               ; ADC interrupt service routine
mov acc_stack,a        ; save ACC to user defined memory
mov a,STATUS
mov status_stack,a     ; save STATUS to user defined memory
:
mov a,SADOL            ; read low byte conversion result value
mov SADOL_buffer,a     ; save result to user defined register
mov a,SADOH            ; read high byte conversion result value
mov SADOH_buffer,a     ; save result to user defined register
:
EXIT_INT_ISR:
mov a,status_stack
mov STATUS,a           ; restore STATUS from user defined memory
mov a,acc_stack        ; restore ACC from user defined memory
reti
```

Battery Charge Module

The device contains a battery charge module which consists of three operational amplifies and two 14-bit D/A converters. The OPA0 together with DAC0 are used for battery charge constant current (CC) control and the OPA1 together with DAC1 are used for battery charge constant voltage (CV) control. The OPA2 is used for battery charge current amplification.

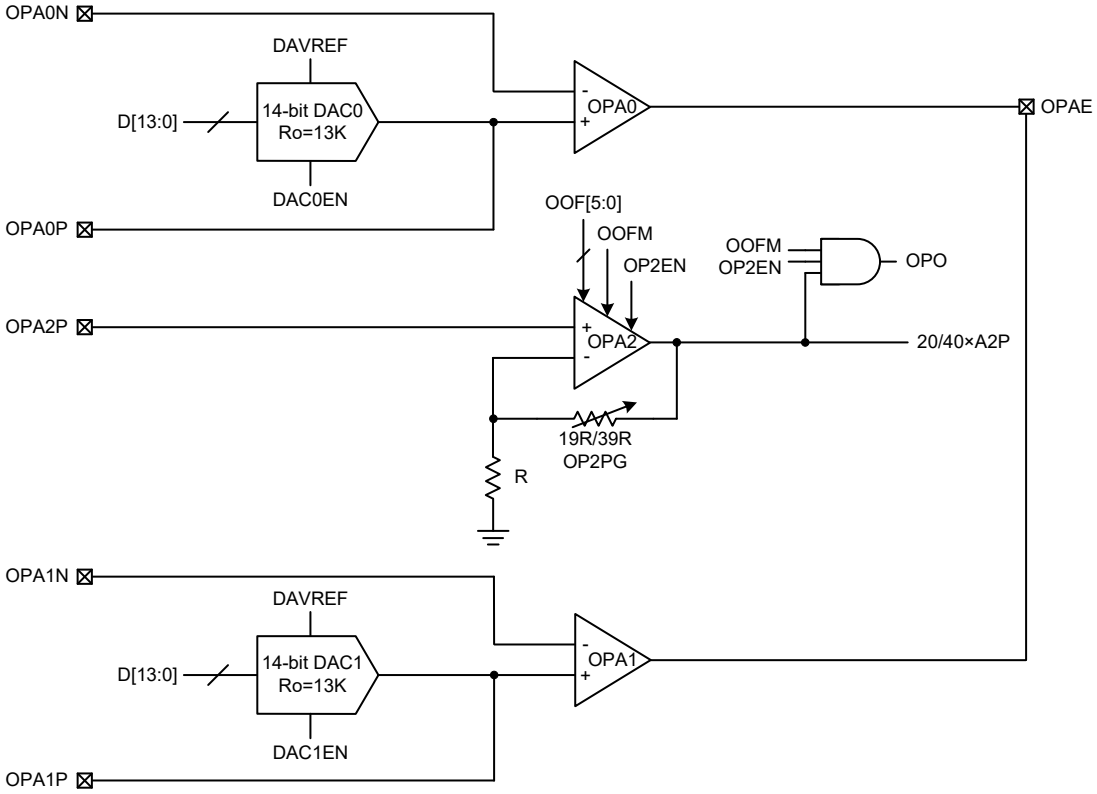

Battery Charge Module Structure

Note: 1.The OPA0 and OPA1 are always enabled, while the OPA2 is controlled by the OP2EN bit in DAOPC register.
2. The OPA0 and OPA1 are open drain outputs.
3. The OPA0 and OPA1 do not need to calibrate the input offset.
4. The OPA2 needs to calibrate the input offset.
5. When the DAC0 or DAC1 is disabled, the output will be in a floating state.
6. The DAVREF voltage comes from A/D PGA output voltage, V_{VR}.

Battery Charge Module Registers

Overall operation of the battery charge module is controlled using a series of registers and the corresponding register definitions are described in the accompanying sections.

Register Name	Bit							
	7	6	5	4	3	2	1	0
DA0L	D7	D6	D5	D4	D3	D2	D1	D0
DA0H	—	—	D13	D12	D11	D10	D9	D8
DA1L	D7	D6	D5	D4	D3	D2	D1	D0
DA1H	—	—	D13	D12	D11	D10	D9	D8
DAOPC	DAC1EN	DAC0EN	OP2EN	OP2PG	—	—	—	OPO
OPVOS	OOFM	—	OOF5	OOF4	OOF3	OOF2	OOF1	OOF0

Battery Charge Module Register List

Digital to Analog Converter

The battery charge module contains two 14-bit R2R D/A converters, namely DAC0 and DAC1. Their reference input voltage comes from DAVREF, and can be power down to save power.

The DAC0 and DAC1 are enabled or disabled by the DAOPC register. They are used to set a reference charging current and voltage using the DA0H/DA0L and DA1H/DA1L registers respectively.

• DA0L Register

Bit	7	6	5	4	3	2	1	0
Name	D7	D6	D5	D4	D3	D2	D1	D0
R/W	R/W	R/W	R/W	R/W	R/W	R/W	R/W	R/W
POR	1	0	0	0	0	0	1	0

Bit 7~0 **D7~D0**: D/A converter 0 output control code low byte
Writing this register will only write the data to a shadow buffer and writing the DA0H register will simultaneously copy the shadow buffer data to the DA0L register.

• DA0H Register

Bit	7	6	5	4	3	2	1	0
Name	—	—	D13	D12	D11	D10	D9	D8
R/W	—	—	R/W	R/W	R/W	R/W	R/W	R/W
POR	—	—	0	0	0	0	0	0

Bit 7~6 Unimplemented, read as “0”

Bit 5~0 **D13~D8**: D/A converter 0 output control code high byte
The D/A converter 0 output voltage is calculated using the following equation:
DAC0OUT=(DAVREF/2^{14})×D[13:0], where DAVREF is D/A converter 0 reference input voltage.

• DA1L Register

Bit	7	6	5	4	3	2	1	0
Name	D7	D6	D5	D4	D3	D2	D1	D0
R/W	R/W	R/W	R/W	R/W	R/W	R/W	R/W	R/W
POR	0	0	0	0	0	0	0	0

Bit 7~0 **D7~D0**: D/A converter 1 output control code low byte
Writing this register will only write the data to a shadow buffer and writing the DA1H register will simultaneously copy the shadow buffer data to the DA1L register.

• **DA1H Register**

Bit	7	6	5	4	3	2	1	0
Name	—	—	D13	D12	D11	D10	D9	D8
R/W	—	—	R/W	R/W	R/W	R/W	R/W	R/W
POR	—	—	1	0	0	0	0	0

Bit 7~6 Unimplemented, read as "0"

Bit 5~0 **D13~D8**: D/A converter 1 output control code high byte
The D/A converter 1 output voltage is calculated using the following equation:
DAC1OUT=(DAVREF/2^{14})×D[13:0], where DAVREF is D/A converter 1 reference input voltage.

• **DAOPC Register**

Bit	7	6	5	4	3	2	1	0
Name	DAC1EN	DAC0EN	OP2EN	OP2PG	—	—	—	OPO
R/W	R/W	R/W	R/W	R/W	—	—	—	R
POR	1	1	0	0	—	—	—	0

Bit 7 **DAC1EN**: D/A converter 1 enable control
0: Disable, D/A converter 1 output floating
1: Enable

Bit 6 **DAC0EN**: D/A converter 0 enable control
0: Disable, D/A converter 0 output floating
1: Enable

Bit 5 **OP2EN**: OPA2 enable control
0: Disable
1: Enable

Bit 4 **OP2PG**: OPA2 PGA gain selection
0: 20
1: 40

Bit 3~1 Unimplemented, read as "0"

Bit 0 **OPO**: OPA2 digital logic output
The OPO is cleared to 0 when the OPA2 is disabled.

Operational Amplifiers

The battery charge module contains three operational amplifiers, namely OPA0, OPA1 and OPA2. The OPA0 and OPA1 are always enabled and do not need to calibrate the input offset. The OPA2 related functions are controlled using the DAOPC and OPVOS registers.

The DAOPC register is used for control OPA2 enable/disable, OPA2 PGA gain selection and output status monitoring. The OPVOS register is used for OPA2 input offset calibration voltage selection and control.

• OPVOS Register

Bit	7	6	5	4	3	2	1	0
Name	OOFM	—	OOF5	OOF4	OOF3	OOF2	OOF1	OOF0
R/W	R/W	—	R/W	R/W	R/W	R/W	R/W	R/W
POR	0	—	1	0	0	0	0	0

Bit 7 **OOFM**: OPA2 normal operation or input offset voltage cancellation mode selection bit
0: Normal operation
1: Offset calibration mode
The input reference voltage comes from OPA2 positive input pin at offset voltage cancellation mode.

Bit 6 Unimplemented, read as "0"

Bit 5~0 **OOF5~OOF0**: OPA2 input offset voltage calibration control bits

Operational Amplifier 2 Operation

The OPA2 provides input offset calibration function. The calibrated data is stored in the OOF5~OOF0 bits. The OOFM bit is used to control cancellation mode selection. The input reference voltage comes from the OPA2P pin in calibration mode. The OPA2P pin is the OPA2 positive input and the 20/40×A2P signal is the OPA2 analog output voltage. The OPA2 digital output flag is OPO, which is used for OPA2 calibration mode. Finally, the OP2EN bit is used to enable or disable the OPA2 function.

Offset Calibration Procedure

As the OPA2 input pin is pin-shared with other functions, it should be configured as the operational amplifier input first by the corresponding pin-shared function selection register.

- Step1: Set OOFM=1, the OPA2 is now under offset calibration mode. To make sure the input offset voltage V_{OS} as minimise as possible after calibration, the input reference voltage in calibration mode should be the same as input DC operating voltage in normal mode operation.
- Step2: Set OOF[5:0]=000000 then read OPO flag.
- Step3: Let OOF[5:0]=OOF[5:0]+1 then read OPO flag, if the OPO flag state is changed, record the data as V_{OS1}.
- Step4: Set OOF[5:0]=111111 then read OPO flag.
- Step5: Let OOF[5:0]=OOF[5:0]-1 then read OPO flag, if the OPO flag state is changed; record the data as V_{OS2}.
- Step6: restore $V_{OS}=(V_{OS1}+V_{OS2})/2$ to OOF[5:0] bits, the calibration is finished.
  If $(V_{OS1}+V_{OS2})/2$ is not integral, discard the decimal.
  Residue $V_{OS}=V_{OUT}–V_{IN}$.

Serial Interface Module – SIM

The device contains a Serial Interface Module, which includes both the four-line SPI interface or two-line I²C interface types, to allow an easy method of communication with external peripheral hardware. Having relatively simple communication protocols, these serial interface types allow the microcontroller to interface to external SPI or I²C based hardware such as sensors, Flash or EEPROM memory, etc. The SIM interface pins are pin-shared with other I/O pins and therefore the SIM interface functional pins must first be selected using the corresponding pin-shared function selection bits. As both interface types share the same pins and registers, the choice of whether the SPI or I²C type is used is made using the SIM operating mode control bits, named SIM2~SIM0, in the SIMC0 register. These pull-high resistors of the SIM pin-shared I/O pins are selected using pull-high control registers when the SIM function is enabled and the corresponding pins are used as SIM input pins.

SPI Interface

The SPI interface is often used to communicate with external peripheral devices such as sensors, Flash or EEPROM memory devices, etc. Originally developed by Motorola, the four line SPI interface is a synchronous serial data interface that has a relatively simple communication protocol simplifying the programming requirements when communicating with external hardware devices.

The communication is full duplex and operates as a slave/master type, where the device can be either master or slave. Although the SPI interface specification can control multiple slave devices from a single master, the device provided only one $\overline{\text{SCS}}$ pin. If the master needs to control multiple slave devices from a single master, the master can use I/O pin to select the slave devices.

SPI Interface Operation

The SPI interface is a full duplex synchronous serial data link. It is a four line interface with pin names SDI, SDO, SCK and $\overline{\text{SCS}}$. Pins SDI and SDO are the Serial Data Input and Serial Data Output lines, SCK is the Serial Clock line and $\overline{\text{SCS}}$ is the Slave Select line. As the SPI interface pins are pin-shared with normal I/O pins and with the I²C function pins, the SPI interface pins must first be selected by configuring the pin-shared function selection bits and setting the correct bits in the SIMC0 and SIMC2 registers. After the desired SPI configuration has been set it can be disabled or enabled using the SIMEN bit in the SIMC0 register. Communication between devices connected to the SPI interface is carried out in a slave/master mode with all data transfer initiations being implemented by the master. The Master also controls the clock signal. As the device only contains a single $\overline{\text{SCS}}$ pin only one slave device can be utilized. The $\overline{\text{SCS}}$ pin is controlled by software, set CSEN bit to 1 to enable $\overline{\text{SCS}}$ pin function, set CSEN bit to 0 the $\overline{\text{SCS}}$ pin will be floating state.

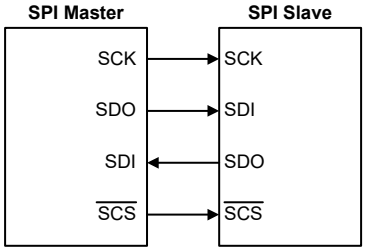

SPI Master/Slave Connection

The SPI function in this device offers the following features:

- Full duplex synchronous data transfer
- Both Master and Slave modes
- LSB first or MSB first data transmission modes

- Transmission complete flag
- Rising or falling active clock edge

The status of the SPI interface pins is determined by a number of factors such as whether the device is in the master or slave mode and upon the condition of certain control bits such as CSEN and SIMEN.

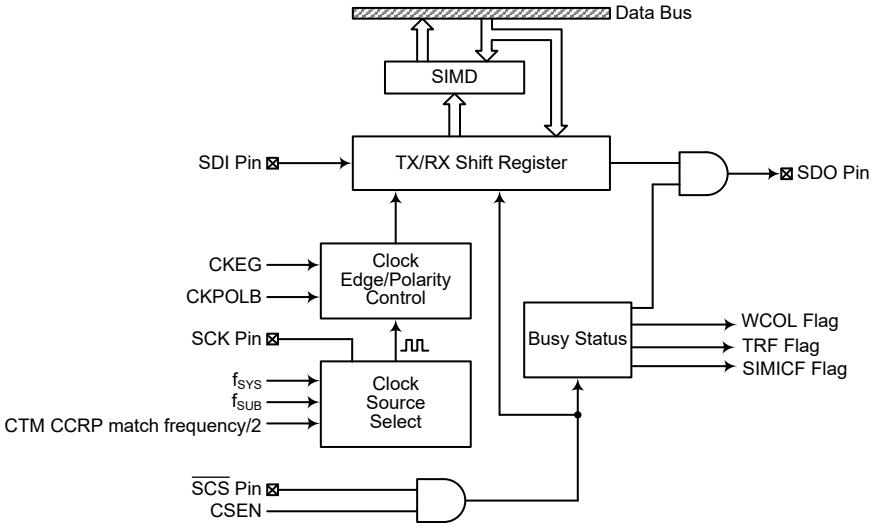

SPI Block Diagram

SPI Registers

There are three internal registers which control the overall operation of the SPI interface. These are the SIMD data register and two registers SIMC0 and SIMC2. The SIMC1 register is only used by the I²C interface.

Register Name	Bit							
	7	6	5	4	3	2	1	0
SIMC0	SIM2	SIM1	SIM0	—	SIMDEB1	SIMDEB0	SIMEN	SIMICF
SIMC2	D7	D6	CKPOLB	CKEG	MLS	CSEN	WCOL	TRF
SIMD	D7	D6	D5	D4	D3	D2	D1	D0

SPI Register List

SPI Data Register

The SIMD register is used to store the data being transmitted and received. The same register is used by both the SPI and I²C functions. Before the device writes data to the SPI bus, the actual data to be transmitted must be placed in the SIMD register. After the data is received from the SPI bus, the device can read it from the SIMD register. Any transmission or reception of data from the SPI bus must be made via the SIMD register.

- **SIMD Register**

Bit	7	6	5	4	3	2	1	0
Name	D7	D6	D5	D4	D3	D2	D1	D0
R/W	R/W	R/W	R/W	R/W	R/W	R/W	R/W	R/W
POR	x	x	x	x	x	x	x	x

"x": unknown

Bit 7~0 **D7~D0**: SIM data register bit 7 ~ bit 0

SPI Control Registers

There are also two control registers for the SPI interface, SIMC0 and SIMC2. Note that the SIMC2 register also has the name SIMA which is used by the I²C function. The SIMC1 register is not used by the SPI function, only by the I²C function. Register SIMC0 is used to control the enable/disable function and to set the data transmission clock frequency. Register SIMC2 is used for other control functions such as LSB/MSB selection, write collision flag, etc.

- **SIMC0 Register**

Bit	7	6	5	4	3	2	1	0
Name	SIM2	SIM1	SIM0	—	SIMDEB1	SIMDEB0	SIMEN	SIMICF
R/W	R/W	R/W	R/W	—	R/W	R/W	R/W	R/W
POR	1	1	1	—	0	0	0	0

Bit 7~5 **SIM2~SIM0**: SIM Operating Mode Control
000: SPI master mode; SPI clock is $f_{SYS}/4$
001: SPI master mode; SPI clock is $f_{SYS}/16$
010: SPI master mode; SPI clock is $f_{SYS}/64$
011: SPI master mode; SPI clock is f_{SUB}
100: SPI master mode; SPI clock is CTM CCRP match frequency/2
101: SPI slave mode
110: I²C slave mode
111: Non SIM function

These bits setup the overall operating mode of the SIM function. As well as selecting if the I²C or SPI function, they are used to control the SPI Master/Slave selection and the SPI Master clock frequency. The SPI clock is a function of the system clock but can also be chosen to be sourced from CTM and f_{SUB}. If the SPI Slave Mode is selected then the clock will be supplied by an external Master device.

Bit 4 Unimplemented, read as "0"

Bit 3~2 **SIMDEB1~SIMDEB0**: I²C Debounce Time Selection
The SIMDEB1~SIMDEB0 bits are only used in the I²C mode and the detailed definition is described in the I²C section.

Bit 1 **SIMEN**: SIM Enable Control
0: Disable
1: Enable

The bit is the overall on/off control for the SIM interface. When the SIMEN bit is cleared to zero to disable the SIM interface, the SDI, SDO, SCK and $\overline{SCS}$, or SDA and SCL lines will lose their SPI or I²C function and the SIM operating current will be reduced to a minimum value. When the bit is high the SIM interface is enabled. If the SIM is configured to operate as an SPI interface via the SIM2~SIM0 bits, the contents of the SPI control registers will remain at the previous settings when the SIMEN bit changes from low to high and should therefore be first initialised by the application program. If the SIM is configured to operate as an I²C interface via the SIM2~SIM0 bits and the SIMEN bit changes from low to high, the contents of the I²C control bits such as HTX and TXAK will remain at the previous settings and should therefore be first initialised by the application program while the relevant I²C flags such as HCF, HAAS, HBB, SRW and RXAK will be set to their default states.

Bit 0 **SIMICF**: SIM SPI slave mode Incomplete Transfer Flag
0: SIM SPI slave mode incomplete condition not occurred
1: SIM SPI slave mode incomplete condition occurred

This bit is only available when the SIM is configured to operate in an SPI slave mode. If the SPI operates in the slave mode with the SIMEN and CSEN bits both being set to 1 but the $\overline{SCS}$ line is pulled high by the external master device before the SPI data transfer is completely finished, the SIMICF bit will be set to 1 together with the TRF bit. When this condition occurs, the corresponding interrupt will occur if the interrupt function is enabled. However, the TRF bit will not be set to 1 if the SIMICF bit is set to 1 by software application program.

• **SIMC2 Register**

Bit	7	6	5	4	3	2	1	0
Name	D7	D6	CKPOLB	CKEG	MLS	CSEN	WCOL	TRF
R/W	R/W	R/W	R/W	R/W	R/W	R/W	R/W	R/W
POR	0	0	0	0	0	0	0	0

Bit 7~6 **D7~D6**: Undefined bits
These bits can be read or written by the application program.

Bit 5 **CKPOLB**: SPI clock line base condition selection
0: The SCK line will be high when the clock is inactive
1: The SCK line will be low when the clock is inactive
The CKPOLB bit determines the base condition of the clock line, if the bit is high, then the SCK line will be low when the clock is inactive. When the CKPOLB bit is low, then the SCK line will be high when the clock is inactive.

Bit 4 **CKEG**: SPI SCK clock active edge type selection
CKPOLB=0
0: SCK is high base level and data capture at SCK rising edge
1: SCK is high base level and data capture at SCK falling edge
CKPOLB=1
0: SCK is low base level and data capture at SCK falling edge
1: SCK is low base level and data capture at SCK rising edge
The CKEG and CKPOLB bits are used to setup the way that the clock signal outputs and inputs data on the SPI bus. These two bits must be configured before data transfer is executed otherwise an erroneous clock edge may be generated. The CKPOLB bit determines the base condition of the clock line, if the bit is high, then the SCK line will be low when the clock is inactive. When the CKPOLB bit is low, then the SCK line will be high when the clock is inactive. The CKEG bit determines active clock edge type which depends upon the condition of CKPOLB bit.

Bit 3 **MLS**: SPI data shift order
0: LSB first
1: MSB first
This is the data shift select bit and is used to select how the data is transferred, either MSB or LSB first. Setting the bit high will select MSB first and low for LSB first.

Bit 2 **CSEN**: SPI $\overline{\text{SCS}}$ pin control
0: Disable
1: Enable
The CSEN bit is used as an enable/disable for the $\overline{\text{SCS}}$ pin. If this bit is low, then the $\overline{\text{SCS}}$ pin will be disabled and placed into a floating condition. If the bit is high, the $\overline{\text{SCS}}$ pin will be enabled and used as a select pin.

Bit 1 **WCOL**: SPI write collision flag
0: No collision
1: Collision
The WCOL flag is used to detect whether a data collision has occurred or not. If this bit is high, it means that data has been attempted to be written to the SIMD register during a data transfer operation. This writing operation will be ignored if data is being transferred. This bit can be cleared by the application program.

Bit 0 **TRF**: SPI Transmit/Receive complete flag
0: SPI data is being transferred
1: SPI data transfer is completed
The TRF bit is the Transmit/Receive Complete flag and is set to 1 automatically when an SPI data transfer is completed, but must cleared to 0 by the application program. It can be used to generate an interrupt.

SPI Communication

After the SPI interface is enabled by setting the SIMEN bit high, then in the Master Mode, when data is written to the SIMD register, transmission/reception will begin simultaneously. When the data transfer is complete, the TRF flag will be set automatically, but must be cleared using the application program. In the Slave Mode, when the clock signal from the master has been received, any data in the SIMD register will be transmitted and any data on the SDI pin will be shifted into the SIMD register. The master should output a $\overline{SCS}$ signal to enable the slave devices before a clock signal is provided. The slave data to be transferred should be well prepared at the appropriate moment relative to the SCK signal depending upon the configurations of the CKPOLB bit and CKEG bit. The accompanying timing diagram shows the relationship between the slave data and SCK signal for various configurations of the CKPOLB and CKEG bits.

The SPI Master mode will continue to function if the SPI clock is running.

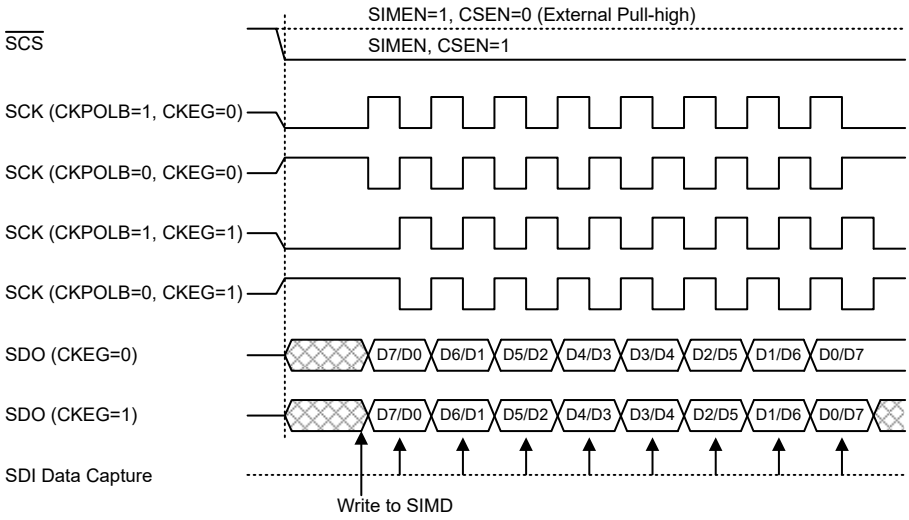

SPI Master Mode Timing

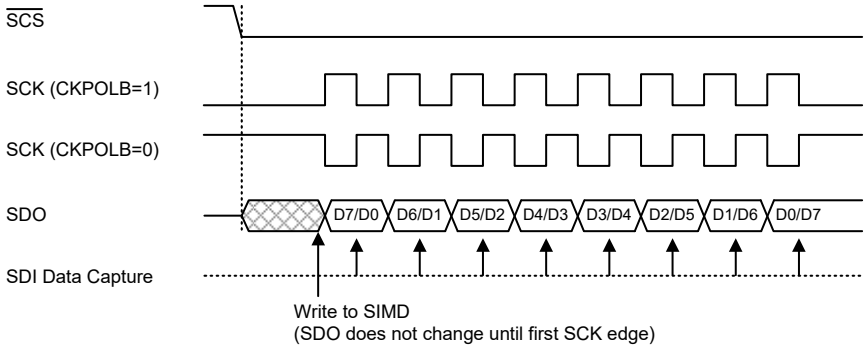

SPI Slave Mode Timing – CKEG=0

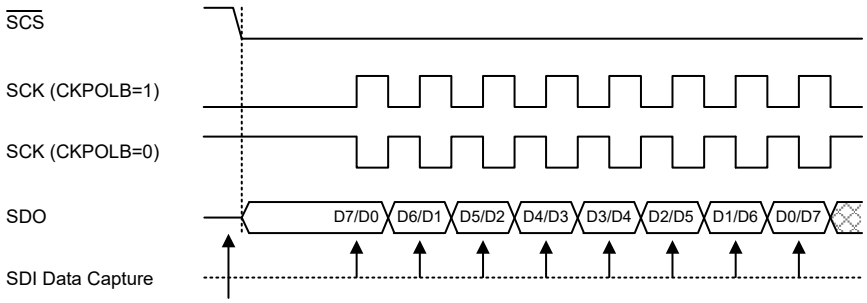

Write to SIMD
(SDO changes as soon as writing occurs; SDO is floating if $\overline{SCS}$=1)

Note: For SPI slave mode, if SIMEN=1 and CSEN=0, SPI is always enabled and ignores the $\overline{SCS}$ level.

SPI Slave Mode Timing – CKEG=1

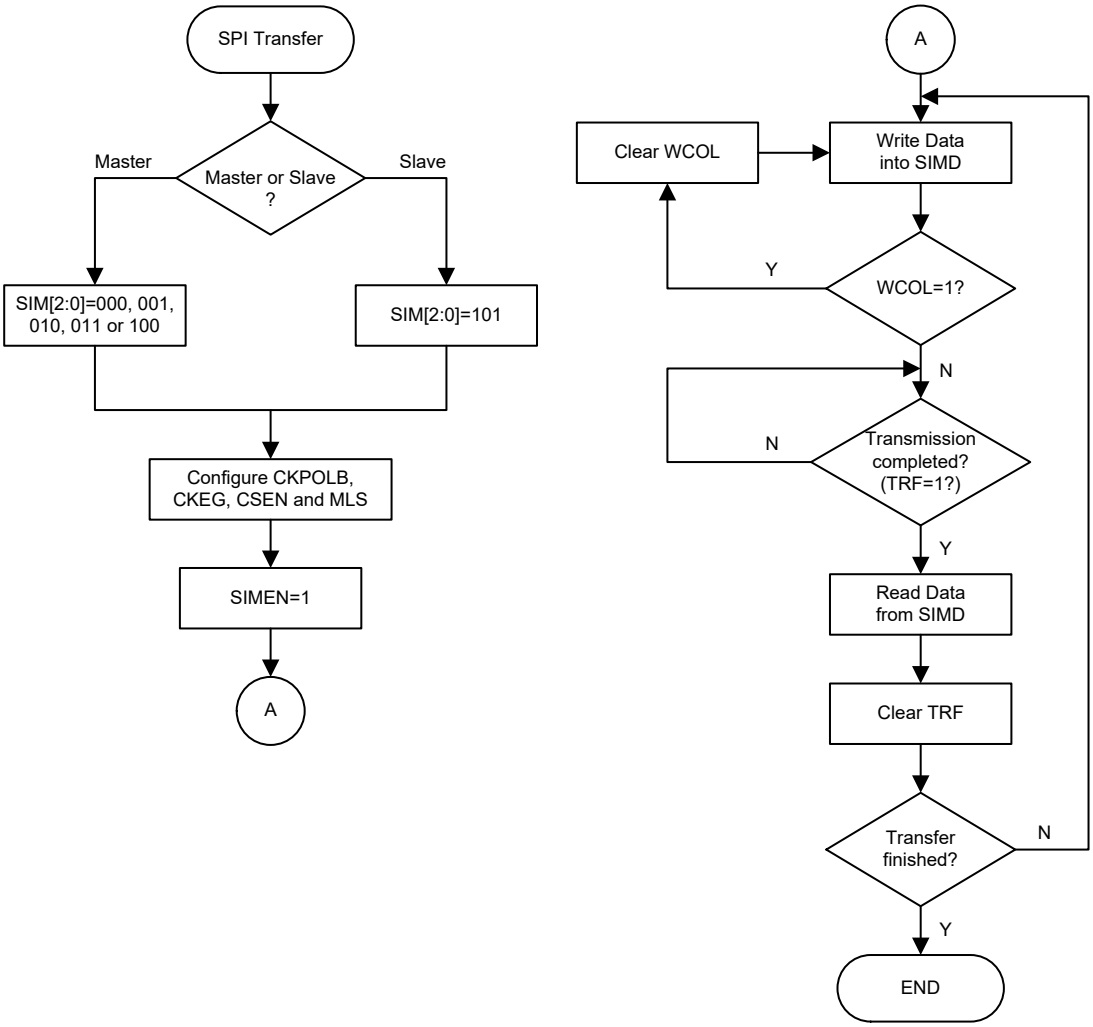

SPI Transfer Control Flow Chart

SPI Bus Enable/Disable

To enable the SPI bus, set CSEN=1 and $\overline{SCS}$=0, then wait for data to be written into the SIMD (TXRX buffer) register. For the Master Mode, after data has been written to the SIMD (TXRX buffer) register, then transmission or reception will start automatically. When all the data has been transferred, the TRF bit should be set. For the Slave Mode, when clock pulses are received on SCK, data in the TXRX buffer will be shifted out or data on SDI will be shifted in.

When the SPI bus is disabled, the SCK, SDI, SDO and $\overline{SCS}$ can become I/O pins or other pin-shared functions using the corresponding pin-shared control bits.

SPI Operation Steps

All communication is carried out using the 4-line interface for either Master or Slave Mode.

The CSEN bit in the SIMC2 register controls the overall function of the SPI interface. Setting this bit high will enable the SPI interface by allowing the $\overline{SCS}$ line to be active, which can then be used to control the SPI interface. If the CSEN bit is low, the SPI interface will be disabled and the $\overline{SCS}$ line will be in a floating condition and can therefore not be used for control of the SPI interface. If the CSEN bit and the SIMEN bit in the SIMC0 are set high, this will place the SDI line in a floating condition and the SDO line high. If in Master Mode the SCK line will be either high or low depending upon the clock polarity selection bit CKPOLB in the SIMC2 register. If in Slave Mode the SCK line will be in a floating condition. If the SIMEN bit is low, then the bus will be disabled and the $\overline{SCS}$, SDI, SDO and SCK will all become I/O pins or the other functions using the corresponding pin-shared control bits. In the Master Mode the Master will always generate the clock signal. The clock and data transmission will be initiated after data has been written into the SIMD register. In the Slave Mode, the clock signal will be received from an external master device for both data transmission and reception. The following sequences show the order to be followed for data transfer in both Master and Slave Mode.

Master Mode

- Step 1
  Select the SPI Master mode and clock source using the SIM2~SIM0 bits in the SIMC0 control register.
- Step 2
  Setup the CSEN bit and setup the MLS bit to choose if the data is MSB or LSB first, this setting must be the same with the Slave devices.
- Step 3
  Setup the SIMEN bit in the SIMC0 control register to enable the SPI interface.
- Step 4
  For write operations: write the data to the SIMD register, which will actually place the data into the TXRX buffer. Then use the SCK and SDO lines to output the data. After this, go to step 5.
  For read operations: the data transferred in on the SDI line will be stored in the TXRX buffer until all the data has been received at which point it will be latched into the SIMD register.
- Step 5
  Check the WCOL bit if set high then a collision error has occurred so return to step 4. If equal to zero then go to the following step.
- Step 6
  Check the TRF bit or wait for an SIM SPI serial bus interrupt.
- Step 7
  Read data from the SIMD register.

- Step 8
  Clear TRF.
- Step 9
  Go to step 4.

Slave Mode

- Step 1
  Select the SPI Slave mode using the SIM2~SIM0 bits in the SIMC0 control register
- Step 2
  Setup the CSEN bit and setup the MLS bit to choose if the data is MSB or LSB first, this setting must be the same with the Master devices.
- Step 3
  Setup the SIMEN bit in the SIMC0 control register to enable the SPI interface.
- Step 4
  For write operations: write the data to the SIMD register, which will actually place the data into the TXRX buffer. Then wait for the master clock SCK and $\overline{SCS}$ signal. After this, go to step 5.
  For read operations: the data transferred in on the SDI line will be stored in the TXRX buffer until all the data has been received at which point it will be latched into the SIMD register.
- Step 5
  Check the WCOL bit if set high then a collision error has occurred so return to step 4. If equal to zero then go to the following step.
- Step 6
  Check the TRF bit or wait for an SIM SPI serial bus interrupt.
- Step 7
  Read data from the SIMD register.
- Step 8
  Clear TRF.
- Step 9
  Go to step 4.

Error Detection

The WCOL bit in the SIMC2 register is provided to indicate errors during data transfer. The bit is set by the SPI serial Interface but must be cleared by the application program. This bit indicates that a data collision has occurred which happens if a write to the SIMD register takes place during a data transfer operation and will prevent the write operation from continuing.

I²C Interface

The I²C interface is used to communicate with external peripheral devices such as sensors, EEPROM memory etc. Originally developed by Philips, it is a two line low speed serial interface for synchronous serial data transfer. The advantage of only two lines for communication, relatively simple communication protocol and the ability to accommodate multiple devices on the same bus has made it an extremely popular interface type for many applications.

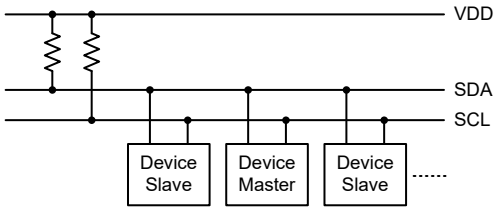

I²C Master/Slave Bus Connection

I²C Interface Operation

The I²C serial interface is a two line interface, a serial data line, SDA, and serial clock line, SCL. As many devices may be connected together on the same bus, their outputs are both open drain types. For this reason it is necessary that external pull-high resistors are connected to these outputs. Note that no chip select line exists, as each device on the I²C bus is identified by a unique address which will be transmitted and received on the I²C bus.

When two devices communicate with each other on the bidirectional I²C bus, one is known as the master device and one as the slave device. Both master and slave can transmit and receive data; however, it is the master device that has overall control of the bus. For the device, which only operates in slave mode, there are two methods of transferring data on the I²C bus, the slave transmit mode and the slave receive mode. The pull-high control function pin-shared with SCL/SDA pin is still applicable even if I²C device is activated and the related internal pull-high function could be controlled by its corresponding pull-high control register.

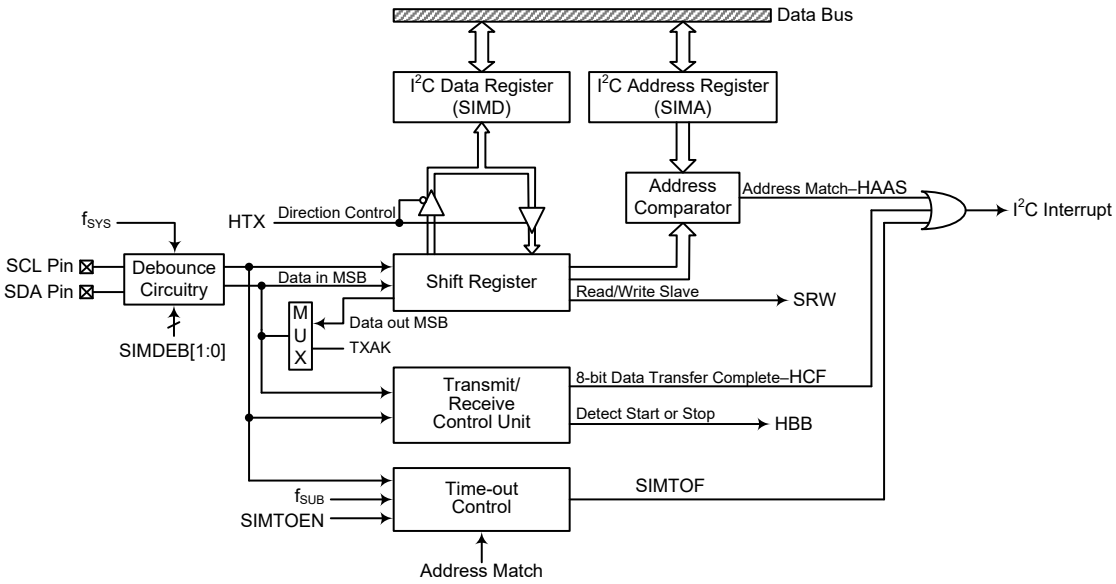

I²C Interface Block Diagram

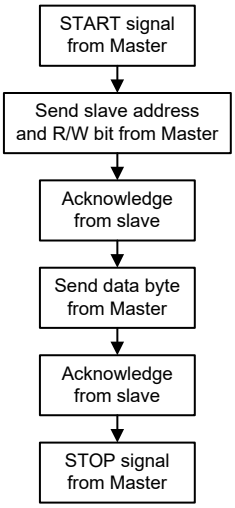

I²C Interface Operation

The SIMDEB1 and SIMDEB0 bits determine the debounce time of the I²C interface. This uses the system clock to in effect add a debounce time to the external clock to reduce the possibility of glitches on the clock line causing erroneous operation. The debounce time, if selected, can be chosen to be either 2 or 4 system clocks. To achieve the required I²C data transfer speed, there exists a relationship between the system clock, f_{SYS}, and the I²C debounce time. For either the I²C Standard or Fast mode operation, users must take care of the selected system clock frequency and the configured debounce time to match the criterion shown in the following table.

I²C Debounce Time Selection	I²C Standard Mode (100kHz)	I²C Fast Mode (400kHz)
No Debounce	f_{SYS}>2MHz	f_{SYS}>4MHz
2 system clock debounce	f_{SYS}>4MHz	f_{SYS}>8MHz
4 system clock debounce	f_{SYS}>4MHz	f_{SYS}>8MHz

I²C Minimum f_{SYS} Frequency Requirement

I²C Registers

There are three control registers associated with the I²C bus, SIMC0, SIMC1 and SIMTOC, one address register SIMA and one data register, SIMD.

Register Name	Bit							
	7	6	5	4	3	2	1	0
SIMC0	SIM2	SIM1	SIM0	—	SIMDEB1	SIMDEB0	SIMEN	SIMICF
SIMC1	HCF	HAAS	HBB	HTX	TXAK	SRW	IAMWU	RXAK
SIMA	SIMA6	SIMA5	SIMA4	SIMA3	SIMA2	SIMA1	SIMA0	D0
SIMD	D7	D6	D5	D4	D3	D2	D1	D0
SIMTOC	SIMTOEN	SIMTOF	SIMTOS5	SIMTOS4	SIMTOS3	SIMTOS2	SIMTOS1	SIMTOS0

I²C Register List

I²C Data Register

The SIMD register is used to store the data being transmitted and received. The same register is used by both the SPI and I²C functions. Before the device writes data to the I²C bus, the actual data to be transmitted must be placed in the SIMD register. After the data is received from the I²C bus, the device can read it from the SIMD register. Any transmission or reception of data from the I²C bus must be made via the SIMD register.

• **SIMD Register**

Bit	7	6	5	4	3	2	1	0
Name	D7	D6	D5	D4	D3	D2	D1	D0
R/W	R/W	R/W	R/W	R/W	R/W	R/W	R/W	R/W
POR	x	x	x	x	x	x	x	x

"x": Unknown

Bit 7~0 **D7~D0**: SIM data register bit 7 ~ bit 0

I²C Address Register

The SIMA register is also used by the SPI interface but has the name SIMC2. The SIMA register is the location where the 7-bit slave address of the slave device is stored. Bits 7~1 of the SIMA register define the device slave address. Bit 0 is not implemented.

When a master device, which is connected to the I²C bus, sends out an address, which matches the slave address in the SIMA register, the slave device will be selected. Note that the SIMA register is the same register address as SIMC2 which is used by the SPI interface.

• **SIMA Register**

Bit	7	6	5	4	3	2	1	0
Name	SIMA6	SIMA5	SIMA4	SIMA3	SIMA2	SIMA1	SIMA0	D0
R/W	R/W	R/W	R/W	R/W	R/W	R/W	R/W	R/W
POR	0	0	0	0	0	0	0	0

Bit 7~1 **SIMA6~SIMA0**: I²C slave address
SIMA6~SIMA0 is the I²C slave address bit 6~bit 0.

Bit 0 **D0**: Reserved bit, can be read or written

I²C Control Registers

There are three control registers for the I²C interface, SIMC0, SIMC1 and SIMTOC. The register SIMC0 is used to control the enable/disable function and to select the I²C slave mode and debounce time. The SIMC1 register contains the relevant flags which are used to indicate the I²C communication status. Another register, SIMTOC, is used to control the I²C time-out function and is described in the corresponding section.

• **SIMC0 Register**

Bit	7	6	5	4	3	2	1	0
Name	SIM2	SIM1	SIM0	—	SIMDEB1	SIMDEB0	SIMEN	SIMICF
R/W	R/W	R/W	R/W	—	R/W	R/W	R/W	R/W
POR	1	1	1	—	0	0	0	0

Bit 7~5 **SIM2~SIM0**: SIM Operating Mode Control
000: SPI master mode; SPI clock is f_{SYS} /4
001: SPI master mode; SPI clock is f_{SYS} /16
010: SPI master mode; SPI clock is f_{SYS} /64
011: SPI master mode; SPI clock is f_{SUB}
100: SPI master mode; SPI clock is CTM CCRP match frequency/2
101: SPI slave mode
110: I²C slave mode
111: Non SIM function

These bits setup the overall operating mode of the SIM function. As well as selecting if the I²C or SPI function, they are used to control the SPI Master/Slave selection and the SPI Master clock frequency. The SPI clock is a function of the system clock but can also be chosen to be sourced from CTM and f_{SUB}. If the SPI Slave Mode is selected then the clock will be supplied by an external Master device.

Bit 4 Unimplemented, read as “0”

Bit 3~2 **SIMDEB1~SIMDEB0**: I²C Debounce Time Selection
00: No debounce
01: 2 system clock debounce
1x: 4 system clock debounce
These bits are used to select the I²C debounce time when the SIM is configured as the I²C interface function by setting the SIM2~SIM0 bits to "110".

Bit 1 **SIMEN**: SIM Enable Control
0: Disable
1: Enable
The bit is the overall on/off control for the SIM interface. When the SIMEN bit is cleared to zero to disable the SIM interface, the SDI, SDO, SCK and $\overline{SCS}$, or SDA and SCL lines will lose their SPI or I²C function and the SIM operating current will be reduced to a minimum value. When the bit is high the SIM interface is enabled. The SIM configuration option must have first enabled the SIM interface for this bit to be effective. If the SIM is configured to operate as an SPI interface via the SIM2~SIM0 bits, the contents of the SPI control registers will remain at the previous settings when the SIMEN bit changes from low to high and should therefore be first initialised by the application program. If the SIM is configured to operate as an I²C interface via the SIM2~SIM0 bits and the SIMEN bit changes from low to high, the contents of the I²C control bits such as HTX and TXAK will remain at the previous settings and should therefore be first initialised by the application program while the relevant I²C flags such as HCF, HAAS, HBB, SRW and RXAK will be set to their default states.

Bit 0 **SIMICF**: SIM SPI Incomplete Flag
The SIMICF bit is only used in the SPI mode and the detailed definition is described in the SPI section.

• SIMC1 Register

Bit	7	6	5	4	3	2	1	0
Name	HCF	HAAS	HBB	HTX	TXAK	SRW	IAMWU	RXAK
R/W	R	R	R	R/W	R/W	R	R/W	R
POR	1	0	0	0	0	0	0	1

Bit 7 **HCF**: I²C Bus data transfer completion flag
0: Data is being transferred
1: Completion of an 8-bit data transfer
The HCF flag is the data transfer completion flag. This flag will be zero when data is being transferred. Upon completion of an 8-bit data transfer the flag will go high and an interrupt will be generated. Below is an example of the flow of a two-byte I²C data transfer. First, I²C slave device receives a start signal from I²C master and then HCF bit is automatically cleared to zero. Second, I²C slave device finishes receiving the 1st data byte and then HCF bit is automatically set high. Third, user read the 1st data byte from SIMD register by the application program and then HCF bit is automatically cleared to zero. Fourth, I²C slave device finishes receiving the 2nd data byte and then HCF bit is automatically set to one and so on. Finally, I²C slave device receives a stop signal from I²C master and then HCF bit is automatically set high.

Bit 6 **HAAS**: I²C Bus data transfer completion flag
0: Not address match
1: Address match
The HAAS flag is the address match flag. This flag is used to determine if the slave device address is the same as the master transmit address. If the addresses match then this bit will be high, if there is no match then the flag will be low.

Bit 5 **HBB**: I^2C Bus busy flag
0: I^2C Bus is not busy
1: I^2C Bus is busy

The HBB flag is the I^2C busy flag. This flag will be "1" when the I^2C bus is busy which will occur when a START signal is detected. The flag will be cleared to "0" when the bus is free which will occur when a STOP signal is detected.

Bit 4 **HTX**: I^2C slave device transmitter/receiver selection
0: Slave device is the receiver
1: Slave device is the transmitter

Bit 3 **TXAK**: I^2C bus transmit acknowledge flag
0: Slave sends acknowledge flag
1: Slave does not send acknowledge flag

The TXAK flag is the transmit acknowledge flag. After the slave device has received 8 bits of data, this flag will be transmitted to the bus on the 9th clock from the slave device. The slave device must always set the TXAK bit to "0" before further data is received.

Bit 2 **SRW**: I^2C slave read/write flag
0: Slave device should be in receive mode
1: Slave device should be in transmit mode

The SRW flag is the I^2C Slave Read/Write flag. This flag determines whether the master device wishes to transmit or receive data from the I^2C bus. When the transmitted address and slave address is match, that is when the HAAS flag is set high, the slave device will check the SRW flag to determine whether it should be in transmit mode or receive mode. If the SRW flag is high, the master is requesting to read data from the bus, so the slave device should be in transmit mode. When the SRW flag is zero, the master will write data to the bus, therefore the slave device should be in receive mode to read this data.

Bit 1 **IAMWU**: I^2C Address Match Wake-Up control
0: Disable
1: Enable – must be cleared by the application program after wake-up

This bit should be set to 1 to enable the I^2C address match wake-up from the SLEEP or IDLE Mode. If the IAMWU bit has been set before entering either the SLEEP or IDLE mode to enable the I^2C address match wake-up, then this bit must be cleared by the application program after wake-up to ensure correction device operation.

Bit 0 **RXAK**: I^2C bus receive acknowledge flag
0: Slave receives acknowledge flag
1: Slave does not receive acknowledge flag

The RXAK flag is the receiver acknowledge flag. When the RXAK flag is "0", it means that a acknowledge signal has been received at the 9th clock, after 8 bits of data have been transmitted. When the slave device is in the transmit mode, the slave device checks the RXAK flag to determine if the master receiver wishes to receive the next byte. The slave transmitter will therefore continue sending out data until the RXAK flag is "1". When this occurs, the slave transmitter will release the SDA line to allow the master to send a STOP signal to release the I^2C Bus.

I²C Bus Communication

Communication on the I²C bus requires four separate steps, a START signal, a slave device address transmission, a data transmission and finally a STOP signal. When a START signal is placed on the I²C bus, all devices on the bus will receive this signal and be notified of the imminent arrival of data on the bus. The first seven bits of the data will be the slave address with the first bit being the MSB. If the address of the slave device matches that of the transmitted address, the HAAS bit in the SIMC1 register will be set and an SIM interrupt will be generated. After entering the interrupt service routine, the slave device must first check the condition of the HAAS and SIMTOF bits to determine whether the interrupt source originates from either an address match or the completion of an 8-bit data transfer or the I²C bus time-out occurrence. During a data transfer, note that after the 7-bit slave address has been transmitted, the following bit, which is the 8th bit, is the read/write bit whose value will be placed in the SRW bit. This bit will be checked by the slave device to determine whether to go into transmit or receive mode. Before any transfer of data to or from the I²C bus, the microcontroller must initialise the bus; the following are steps to achieve this:

- Step 1
  Set the SIM2~SIM0 bits to "110" and SIMEN bit to "1" in the SIMC0 register to enable the I²C bus.
- Step 2
  Write the slave address of the device to the I²C bus address register SIMA.
- Step 3
  Set the SIME interrupt enable bit of the interrupt control register to enable the SIM interrupt.

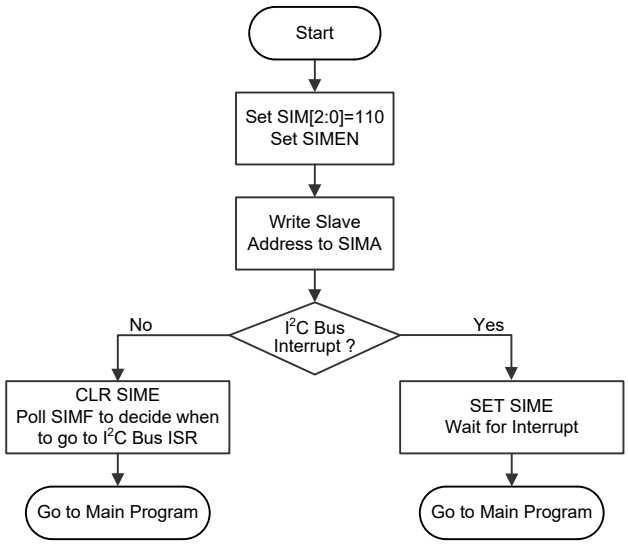

I²C Bus Initialisation Flow Chart

I²C Bus Start Signal

The START signal can only be generated by the master device connected to the I²C bus and not by the slave device. This START signal will be detected by all devices connected to the I²C bus. When detected, this indicates that the I²C bus is busy and therefore the HBB bit will be set. A START condition occurs when a high to low transition on the SDA line takes place when the SCL line remains high.

I²C Slave Address

The transmission of a START signal by the master will be detected by all devices on the I²C bus. To determine which slave device the master wishes to communicate with, the address of the slave device will be sent out immediately following the START signal. All slave devices, after receiving this 7-bit address data, will compare it with their own 7-bit slave address. If the address sent out by the master matches the internal address of the microcontroller slave device, then an internal SIM I²C bus interrupt signal will be generated. The next bit following the address, which is the 8th bit, defines the read/write status and will be saved to the SRW bit of the SIMC1 register. The slave device will then transmit an acknowledge bit, which is a low level, as the 9th bit. The slave device will also set the status flag HAAS when the addresses match.

As an SIM I²C bus interrupt can come from three sources, when the program enters the interrupt subroutine, the HAAS and SIMTOF bits should be examined to see whether the interrupt source has come from either a matching slave address, the completion of a data byte transfer or the I²C bus time-out occurrence. When a slave address is matched, the device must be placed in either the transmit mode and then write data to the SIMD register, or in the receive mode where it must implement a dummy read from the SIMD register to release the SCL line.

I²C Bus Read/Write Signal

The SRW bit in the SIMC1 register defines whether the master device wishes to read data from the I²C bus or write data to the I²C bus. The slave device should examine this bit to determine if it is to be a transmitter or a receiver. If the SRW flag is "1" then this indicates that the master device wishes to read data from the I²C bus, therefore the slave device must be setup to send data to the I²C bus as a transmitter. If the SRW flag is "0" then this indicates that the master wishes to send data to the I²C bus, therefore the slave device must be setup to read data from the I²C bus as a receiver.

I²C Bus Slave Address Acknowledge Signal

After the master has transmitted a calling address, any slave device on the I²C bus, whose own internal address matches the calling address, must generate an acknowledge signal. The acknowledge signal will inform the master that a slave device has accepted its calling address. If no acknowledge signal is received by the master then a STOP signal must be transmitted by the master to end the communication. When the HAAS flag is high, the addresses have matched and the slave device must check the SRW flag to determine if it is to be a transmitter or a receiver. If the SRW flag is high, the slave device should be setup to be a transmitter so the HTX bit in the SIMC1 register should be set to “1”. If the SRW flag is low, then the microcontroller slave device should be setup as a receiver and the HTX bit in the SIMC1 register should be cleared to “0”.

I²C Bus Data and Acknowledge Signal

The transmitted data is 8-bit wide and is transmitted after the slave device has acknowledged receipt of its slave address. The order of serial bit transmission is the MSB first and the LSB last. After receipt of 8 bits of data, the receiver must transmit an acknowledge signal, level “0”, before it can receive the next data byte. If the slave transmitter does not receive an acknowledge bit signal from the master receiver, then the slave transmitter will release the SDA line to allow the master to send a STOP signal to release the I²C Bus. The corresponding data will be stored in the SIMD register. If setup as a transmitter, the slave device must first write the data to be transmitted into the SIMD register. If setup as a receiver, the slave device must read the transmitted data from the SIMD register.

When the slave receiver receives the data byte, it must generate an acknowledge bit, known as TXAK, on the 9th clock. The slave device, which is setup as a transmitter will check the RXAK bit in the SIMC1 register to determine if it is to send another data byte, if not then it will release the SDA line and await the receipt of a STOP signal from the master.

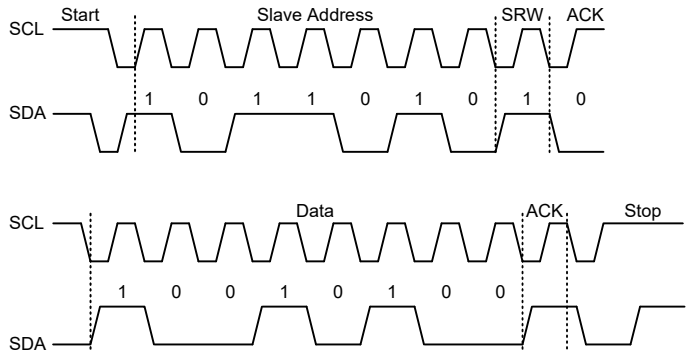

S=Start (1 bit)
SA=Slave Address (7 bits)
SR=SRW bit (1 bit)
M=Slave device send acknowledge bit (1 bit)
D=Data (8 bits)
A=ACK (RXAK bit for transmitter, TXAK bit for receiver, 1 bit)
P=Stop (1 bit)

S	SA	SR	M	D	A	D	A	……	S	SA	SR	M	D	A	D	A	……	P

Note: When a slave address is matched, the device must be placed in either the transmit mode and then write data to the SIMD register, or in the receive mode where it must implement a dummy read from the SIMD register to release the SCL line.

I²C Communication Timing Diagram

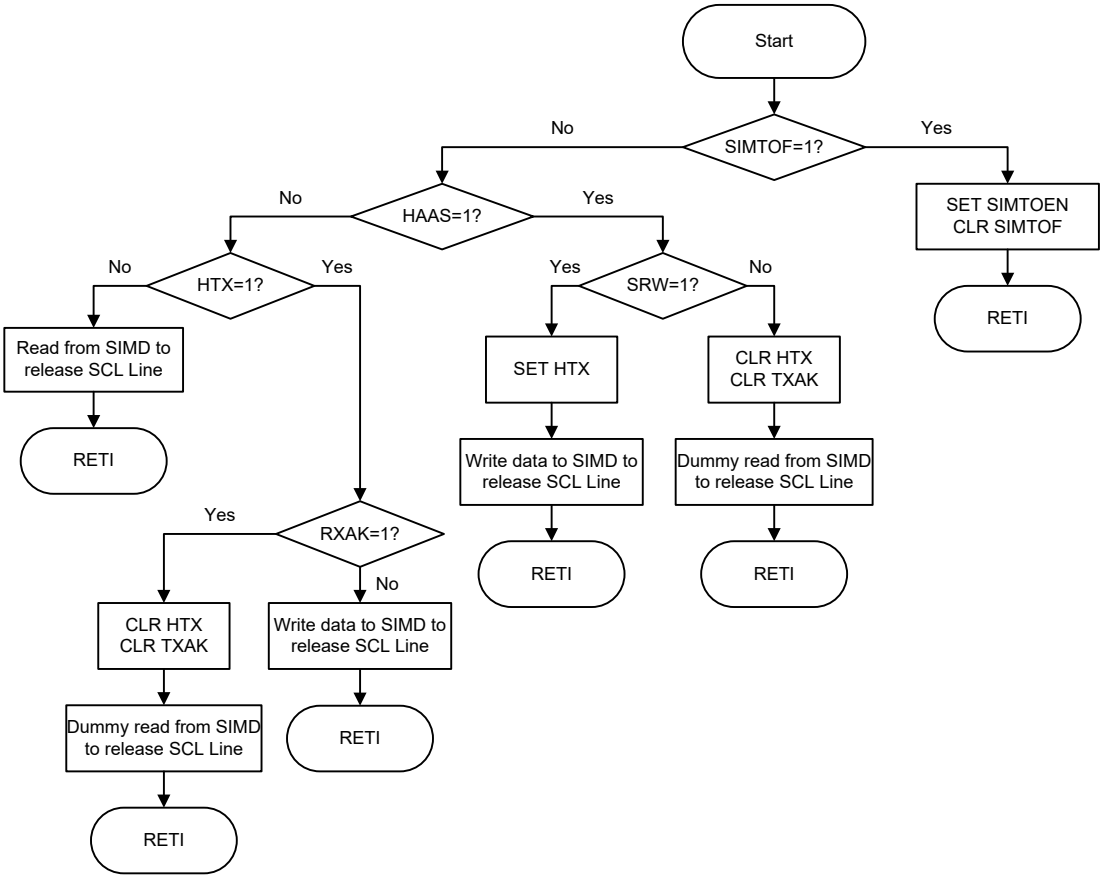

I²C Bus ISR Flow Chart

I²C Time-out Control

In order to reduce the I²C lockup problem due to reception of erroneous clock sources, a time-out function is provided. If the clock source connected to the I²C bus is not received for a while, then the I²C circuitry and registers will be reset after a certain time-out period. The time-out counter starts to count on an I²C bus "START" & "address match" condition, and is cleared by an SCL falling edge. Before the next SCL falling edge arrives, if the time elapsed is greater than the time-out period specified by the SIMTOC register, then a time-out condition will occur. The time-out function will stop when an I²C "STOP" condition occurs.

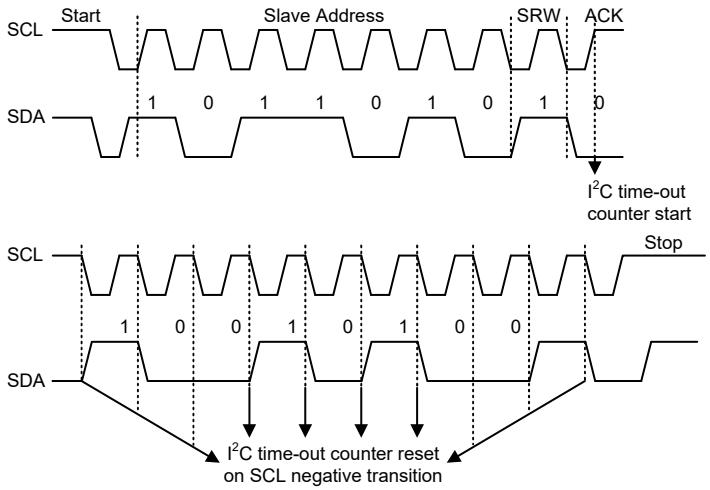

I²C Time-out

When an I²C time-out counter overflow occurs, the counter will stop and the SIMTOEN bit will be cleared to zero and the SIMTOF bit will be set high to indicate that a time-out condition has occurred. The time-out condition will also generate an interrupt which uses the SIM interrupt vector. When an I²C time-out occurs, the I²C internal circuitry will be reset and the registers will be reset into the following condition:

Registers	After I²C Time-out
SIMD, SIMA, SIMC0	No change
SIMC1	Reset to POR condition

I²C Registers after Time-out

The SIMTOF flag can be cleared by the application program. There are 64 time-out period selections which can be selected using the SIMTOS5~SIMTOS0 bits in the SIMTOC register. The time-out duration is calculated by the formula: $((1\sim64)\times(32/f_{SUB}))$. This gives a time-out period which ranges from about 1ms to 64ms.

- **SIMTOC Register**

Bit	7	6	5	4	3	2	1	0
Name	SIMTOEN	SIMTOF	SIMTOS5	SIMTOS4	SIMTOS3	SIMTOS2	SIMTOS1	SIMTOS0
R/W	R/W	R/W	R/W	R/W	R/W	R/W	R/W	R/W
POR	0	0	0	0	0	0	0	0

Bit 7 **SIMTOEN**: SIM I²C Time-out control
0: Disable
1: Enable

Bit 6 **SIMTOF**: SIM I²C Time-out flag
0: No time-out occurred
1: Time-out occurred

Bit 5~0 **SIMTOS5~SIMTOS0**: SIM I²C Time-out period selection
I²C Time-out clock source is $f_{SUB}/32$.
I²C Time-out period is equal to $(SIMTOS[5:0]+1)\times(32/f_{SUB})$

UART Interface

The device contains an integrated full-duplex or half-duplex asynchronous serial communications UART interface that enables communication with external devices that contain a serial interface. The UART function has many features and can transmit and receive data serially by transferring a frame of data with eight or nine data bits per transmission as well as being able to detect errors when the data is overwritten or incorrectly framed. The UART function possesses its own internal interrupt which can be used to indicate when a reception occurs or when a transmission terminates.

The integrated UART function contains the following features:

- Full-duplex or half-duplex (single wire mode), asynchronous communication
- 8 or 9 bits character length
- Even, odd, mark, space or no parity options
- One or two stop bits
- Baud rate generator with 16-bit prescaler
- Parity, framing, noise and overrun error detection
- Support for interrupt on address detect (last character bit=1)
- Separately enabled transmitter and receiver
- 4-byte Deep FIFO Receive Data Buffer
- 1-byte Deep FIFO Transmit Data Buffer
- RX/TX pin wake-up function
- Transmit and receive interrupts
- Interrupts can be triggered by the following conditions:
  - Transmitter Empty
  - Transmitter Idle
  - Receiver Full
  - Receiver Overrun
  - Address Mode Detect

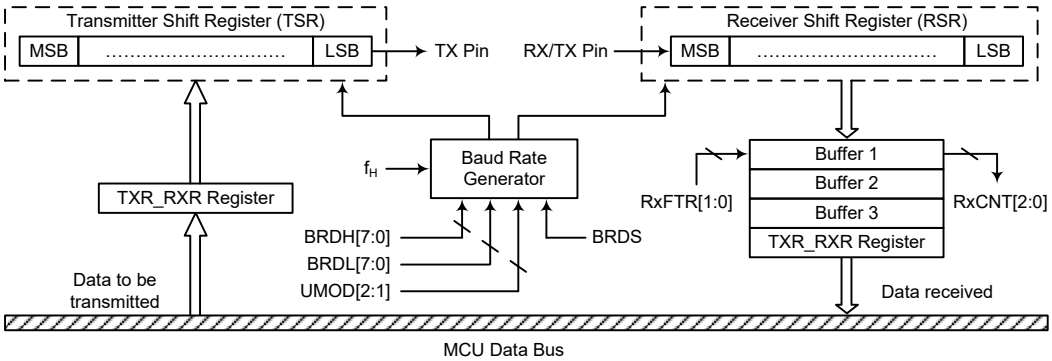

UART Data Transfer Block Diagram – SWM=0

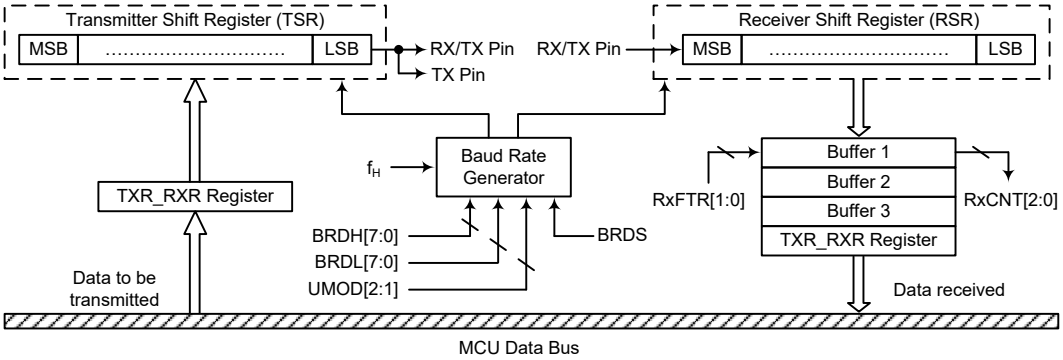

UART Data Transfer Block Diagram – SWM=1

UART External Pins

To communicate with an external serial interface, the internal UART has two external pins known as TX and RX/TX, which are pin-shared with I/O or other pin functions. The TX and RX/TX pin function should first be selected by the corresponding pin-shared function selection register before the UART function is used. Along with the UARTEN bit, the TXEN and RXEN bits, if set, will configure these pins to transmitter output and receiver input conditions. At this time the internal pull-high resistor related to the transmitter output pin will be disabled, while the internal pull-high resistor related to the receiver input pin is controlled by the corresponding I/O pull-high function control bit. When the TX or RX/TX pin function is disabled by clearing the UARTEN, TXEN or RXEN bit, the TX or RX/TX pin will be set to a floating state. At this time whether the internal pull-high resistor is connected to the TX or RX/TX pin or not is determined by the corresponding I/O pull-high function control bit.

UART Single Wire Mode

The UART function also supports a Single Wire Mode communication which is selected using the SWM bit in the UCR3 register. When the SWM bit is set high, the UART function will be in the single wire mode. In the single wire mode, a single RX/TX pin can be used to transmit and receive data depending upon the corresponding control bits. When the RXEN bit is set high, the RX/TX pin is used as a receiver pin. When the RXEN bit is cleared to zero and the TXEN bit is set high, the RX/TX pin will act as a transmitter pin.

It is recommended not to set both the RXEN and TXEN bits high in the single wire mode. If both the RXEN and TXEN bits are set high, the RXEN bit will have the priority and the UART will act as a receiver.

It is important to note that the functional description in this UART chapter, which is described from the full-duplex communication standpoint, also applies to the half-duplex (single wire mode) communication except the pin usage. In the single wire mode, the TX pin mentioned in this chapter should be replaced by the RX/TX pin to understand the whole UART single wire mode function.

In the single wire mode, the data can also be transmitted on the TX pin in a transmission operation with proper software configurations. Therefore, the data will be output on the RX/TX and TX pins.

UART Data Transfer Scheme

The UART Data Transfer Block Diagram shows the overall data transfer structure arrangement for the UART. The actual data to be transmitted from the MCU is first transferred to the TXR_RXR register by the application program. The data will then be transferred to the Transmit Shift Register from where it will be shifted out, LSB first, onto the TX pin at a rate controlled by the Baud Rate

Generator. Only the TXR_RXR register is mapped onto the MCU Data Memory, the Transmit Shift Register is not mapped and is therefore inaccessible to the application program.

Data to be received by the UART is accepted on the external RX/TX pin, from where it is shifted in, LSB first, to the Receiver Shift Register at a rate controlled by the Baud Rate Generator. When the shift register is full, the data will then be transferred from the shift register to the internal TXR_RXR register, where it is buffered and can be manipulated by the application program. Only the TXR_RXR register is mapped onto the MCU Data Memory, the Receiver Shift Register is not mapped and is therefore inaccessible to the application program.

It should be noted that the actual register for data transmission and reception only exists as a single shared register, TXR_RXR, in the Data Memory.

UART Status and Control Registers

There are nine control registers associated with the UART function. The SWM bit in the UCR3 register is used to enable/disable the UART Single Wire Mode. The USR, UCR1, UCR2, UFCR and RxCNT registers control the overall function of the UART, while the BRDH and BRDL registers control the Baud rate. The actual data to be transmitted and received on the serial interface is managed through the TXR_RXR data register.

Register Name	Bit							
	7	6	5	4	3	2	1	0
USR	PERR	NF	FERR	OERR	RIDLE	RXIF	TIDLE	TXIF
UCR1	UARTEN	BNO	PREN	PRT1	PRT0	TXBRK	RX8	TX8
UCR2	TXEN	RXEN	STOPS	ADDEN	WAKE	RIE	TIIE	TEIE
UCR3	—	—	—	—	—	—	—	SWM
TXR_RXR	TXRX7	TXRX6	TXRX5	TXRX4	TXRX3	TXRX2	TXRX1	TXRX0
BRDH	D7	D6	D5	D4	D3	D2	D1	D0
BRDL	D7	D6	D5	D4	D3	D2	D1	D0
UFCR	—	—	UMOD2	UMOD1	UMOD0	BRDS	RxFTR1	RxFTR0
RxCNT	—	—	—	—	—	D2	D1	D0

UART Register List

• USR Register

The USR register is the status register for the UART, which can be read by the program to determine the present status of the UART. All flags within the USR register are read only. Further explanation on each of the flags is given below:

Bit	7	6	5	4	3	2	1	0
Name	PERR	NF	FERR	OERR	RIDLE	RXIF	TIDLE	TXIF
R/W	R	R	R	R	R	R	R	R
POR	0	0	0	0	1	0	1	1

Bit 7 **PERR**: Parity error flag
0: No parity error is detected
1: Parity error is detected

The PERR flag is the parity error flag. When this read only flag is “0”, it indicates a parity error has not been detected. When the flag is “1”, it indicates that the parity of the received word is incorrect. This error flag is applicable only if the parity is enabled and the parity type (odd, even, mark or space) is selected. The flag can also be cleared by a software sequence which involves a read to the status register USR followed by an access to the TXR_RXR data register.

Bit 6 **NF**: Noise flag
0: No noise is detected
1: Noise is detected

The NF flag is the noise flag. When this read only flag is “0”, it indicates no noise condition. When the flag is “1”, it indicates that the UART has detected noise on the receiver input. The NF flag is set during the same cycle as the RXIF flag but will not be set in the case of as overrun. The NF flag can be cleared by a software sequence which will involve a read to the status register USR followed by an access to the TXR_RXR data register.

Bit 5 **FERR**: Framing error flag
0: No framing error is detected
1: Framing error is detected

The FERR flag is the framing error flag. When this read only flag is “0”, it indicates that there is no framing error. When the flag is “1”, it indicates that a framing error has been detected for the current character. The flag can also be cleared by a software sequence which will involve a read to the status register USR followed by an access to the TXR_RXR data register.

Bit 4 **OERR**: Overrun error flag
0: No overrun error is detected
1: Overrun error is detected

The OERR flag is the overrun error flag which indicates when the receiver buffer has overflowed. When this read only flag is “0”, it indicates that there is no overrun error. When the flag is “1”, it indicates that an overrun error occurs which will inhibit further transfers to the TXR_RXR receive data register. The flag is cleared by a software sequence, which is a read to the status register USR followed by an access to the TXR_RXR data register.

Bit 3 **RIDLE**: Receiver status
0: Data reception is in progress (Data being received)
1: No data reception is in progress (Receiver is idle)

The RIDLE flag is the receiver status flag. When this read only flag is “0”, it indicates that the receiver is between the initial detection of the start bit and the completion of the stop bit. When the flag is “1”, it indicates that the receiver is idle. Between the completion of the stop bit and the detection of the next start bit, the RIDLE bit is “1” indicating that the UART receiver is idle and the RX/TX pin stays in logic high condition.

Bit 2 **RXIF**: Receive TXR_RXR data register status
0: TXR_RXR data register is empty
1: TXR_RXR data register has available data and reach Receiver FIFO trigger level

The RXIF flag is the receive data register status flag. When this read only flag is “0”, it indicates that the TXR_RXR read data register is empty. When the flag is “1”, it indicates that the TXR_RXR read data register contains new data. When the contents of the shift register are transferred to the TXR_RXR register and reach Receiver FIFO trigger level, an interrupt is generated if RIE=1 in the UCR2 register. If one or more errors are detected in the received word, the appropriate receive-related flags NF, FERR, and/or PERR are set within the same clock cycle. The RXIF flag is cleared when the USR register is read with RXIF set, followed by a read from the TXR_RXR register, and if the TXR_RXR register has no data available.

Bit 1 **TIDLE**: Transmission idle
0: Data transmission is in progress (Data being transmitted)
1: No data transmission is in progress (Transmitter is idle)

The TIDLE flag is known as the transmission complete flag. When this read only flag is “0”, it indicates that a transmission is in progress. This flag will be set high when the TXIF flag is “1” and when there is no transmit data or break character being transmitted. When TIDLE is equal to "1", the TX pin becomes idle with the pin state in logic high condition. The TIDLE flag is cleared by reading the USR register with

TIDLE set and then writing to the TXR_RXR register. The flag is not generated when a data character or a break is queued and ready to be sent.

Bit 0 **TXIF**: Transmit TXR_RXR data register status
0: Character is not transferred to the transmit shift register
1: Character has transferred to the transmit shift register (TXR_RXR data register is empty)

The TXIF flag is the transmit data register empty flag. When this read only flag is “0”, it indicates that the character is not transferred to the transmitter shift register. When the flag is “1”, it indicates that the transmitter shift register has received a character from the TXR_RXR data register. The TXIF flag is cleared by reading the UART status register (USR) with TXIF set and then writing to the TXR_RXR data register. Note that when the TXEN bit is set, the TXIF flag will also be set since the transmit data register is not yet full.

• UCR1 Register

The UCR1 register together with the UCR2 and UCR3 register are the three UART control registers that are used to set the various options for the UART function, such as overall on/off control, parity control, data transfer bit length, single wire mode communication etc. Further explanation on each of the bits is given below:

Bit	7	6	5	4	3	2	1	0
Name	UARTEN	BNO	PREN	PRT1	PRT0	TXBRK	RX8	TX8
R/W	R/W	R/W	R/W	R/W	R/W	R/W	R	W
POR	0	0	0	0	0	0	x	0

“x”: unknown

Bit 7 **UARTEN**: UART function enable control
0: Disable UART. TX and RX/TX pins are in a floating state
1: Enable UART. TX and RX/TX pins function as UART pins

The UARTEN bit is the UART enable bit. When this bit is equal to "0", the UART will be disabled and the RX/TX pin as well as the TX pin will be set in a floating state. When the bit is equal to "1", the UART will be enabled and the TX and RX/TX pins will function as defined by the SWM mode selection bit together with the TXEN and RXEN enable control bits.

When the UART is disabled, it will empty the buffer so any character remaining in the buffer will be discarded. In addition, the value of the baud rate counter will be reset. If the UART is disabled, all error and status flags will be reset. Also the TXEN, RXEN, TXBRK, RXIF, OERR, FERR, PERR and NF bits as well as the RxCNT register will be cleared, while the TIDLE, TXIF and RIDLE bits will be set. Other control bits in UCR1, UCR2, UCR3, UFCR, BRDH and BRDL registers will remain unaffected. If the UART is active and the UARTEN bit is cleared, all pending transmissions and receptions will be terminated and the module will be reset as defined above. When the UART is re-enabled, it will restart in the same configuration.

Bit 6 **BNO**: Number of data transfer bits selection
0: 8-bit data transfer
1: 9-bit data transfer

This bit is used to select the data length format, which can have a choice of either 8-bit or 9-bit format. When this bit is equal to "1", a 9-bit data length format will be selected. If the bit is equal to "0", then an 8-bit data length format will be selected. If 9-bit data length format is selected, then bits RX8 and TX8 will be used to store the 9th bit of the received and transmitted data respectively.

Note that the 9th bit of data if BNO=1, or the 8th bit of data if BNO=0, which is used as the parity bit, does not transfer to RX8 or TXRX7 respectively when the parity function is enabled.

Bit 5 **PREN**: Parity function enable control
0: Parity function is disabled
1: Parity function is enabled
This is the parity enable bit. When this bit is equal to "1", the parity function will be enabled. If the bit is equal to "0", then the parity function will be disabled. Replace the most significant bit position with a parity bit.

Bit 4~3 **PRT1~PRT0**: Parity type selection bits
00: Even parity for parity generator
01: Odd parity for parity generator
10: Mark parity for parity generator
11: Space parity for parity generator
These bits are the parity type selection bits. When these bits are equal to 00b, even parity type will be selected. If these bits are equal to 01b, then odd parity type will be selected. If these bits are equal to 10b, then a 1 (Mark) in the parity bit location will be selected. If these bits are equal to 11b, then a 0 (Space) in the parity bit location will be selected.

Bit 2 **TXBRK**: Transmit break character
0: No break character is transmitted
1: Break characters transmit
The TXBRK bit is the Transmit Break Character bit. When this bit is "0", there are no break characters and the TX pin operates normally. When the bit is "1", there are transmit break characters and the transmitter will send logic zeros. When this bit is equal to "1", after the buffered data has been transmitted, the transmitter output is held low for a minimum of a 13-bit length and until the TXBRK bit is reset.

Bit 1 **RX8**: Receive data bit 8 for 9-bit data transfer format (read only)
This bit is only used if 9-bit data transfers are used, in which case this bit location will store the 9th bit of the received data known as RX8. The BNO bit is used to determine whether data transfers are in 8-bit or 9-bit format.

Bit 0 **TX8**: Transmit data bit 8 for 9-bit data transfer format (write only)
This bit is only used if 9-bit data transfers are used, in which case this bit location will store the 9th bit of the transmitted data known as TX8. The BNO bit is used to determine whether data transfers are in 8-bit or 9-bit format.

• UCR2 Register

The UCR2 register is the second of the two UART control registers and serves several purposes. One of its main functions is to control the basic enable/disable operation of the UART Transmitter and Receiver as well as enabling the various UART interrupt sources. The register also serves to control the STOP bit number selection, receiver wake-up enable and the address detect enable. Further explanation on each of the bits is given below:

Bit	7	6	5	4	3	2	1	0
Name	TXEN	RXEN	STOPS	ADDEN	WAKE	RIE	TIIE	TEIE
R/W	R/W	R/W	R/W	R/W	R/W	R/W	R/W	R/W
POR	0	0	0	0	0	0	0	0

Bit 7 **TXEN**: UART Transmitter enabled control
0: UART transmitter is disabled
1: UART transmitter is enabled
The bit named TXEN is the Transmitter Enable Bit. When this bit is equal to “0”, the transmitter will be disabled with any pending data transmissions being aborted. In addition the buffers will be reset. In this situation the TX pin will be in a floating state.
If the TXEN bit is equal to “1” and the UARTEN bit is also equal to “1”, the transmitter will be enabled and the TX pin will be controlled by the UART. Clearing the TXEN bit during a transmission will cause the data transmission to be aborted and will reset the transmitter. If this situation occurs, the TX pin will be in a floating state.

Bit 6 **RXEN**: UART Receiver enabled control
0: UART receiver is disabled
1: UART receiver is enabled

The bit named RXEN is the Receiver Enable Bit. When this bit is equal to "0", the receiver will be disabled with any pending data receptions being aborted. In addition, the receive buffers will be reset. In this situation the RX/TX pin will be in a floating state. If the RXEN bit is equal to "1" and the UARTEN bit is also equal to "1", the receiver will be enabled and the RX/TX pin will be controlled by the UART. Clearing the RXEN bit during a reception will cause the data reception to be aborted and will reset the receiver. If this situation occurs, the RX/TX pin will be in a floating state.

Bit 5 **STOPS**: Number of stop bits selection for transmitter
0: One stop bit format is used
1: Two stop bits format is used

This bit determines if one or two stop bits are to be used for transmitter. When this bit is equal to "1", two stop bits are used. If this bit is equal to "0", then only one stop bit is used.

Bit 4 **ADDEN**: Address detect function enable control
0: Address detect function is disabled
1: Address detect function is enabled

The bit named ADDEN is the address detect function enable control bit. When this bit is equal to "1", the address detect function is enabled. When it occurs, if the 8th bit, which corresponds to TXRX7 if BNO=0 or the 9th bit, which corresponds to RX8 if BNO=1, has a value of "1", then the received word will be identified as an address, rather than data. If the corresponding interrupt is enabled, an interrupt request will be generated each time the received word has the address bit set, which is the 8th or 9th bit depending on the value of BNO. If the address bit known as the 8th or 9th bit of the received word is "0" with the address detect function being enabled, an interrupt will not be generated and the received data will be discarded.

Bit 3 **WAKE**: RX/TX pin wake-up UART function enable control
0: RX/TX pin wake-up UART function is disabled
1: RX/TX pin wake-up UART function is enabled

This bit is used to control the wake-up UART function when a falling edge on the RX/TX pin occurs. Note that this bit is only available when the UART clock (f_H) is switched off. There will be no RX/TX pin wake-up UART function if the UART clock (f_H) exists. If the WAKE bit is set to 1 as the UART clock (f_H) is switched off, a UART wake-up request will be initiated when a falling edge on the RX/TX pin occurs. When this request happens and the corresponding interrupt is enabled, an RX/TX pin wake-up UART interrupt will be generated to inform the MCU to wake up the UART function by switching on the UART clock (f_H) via the application program. Otherwise, the UART function cannot resume even if there is a falling edge on the RX/TX pin when the WAKE bit is cleared to 0.

Bit 2 **RIE**: Receiver interrupt enable control
0: Receiver related interrupt is disabled
1: Receiver related interrupt is enabled

This bit enables or disables the receiver interrupt. If this bit is equal to "1" and when the receiver overrun flag OERR or receive data available flag RXIF is set, the UART interrupt request flag will be set. If this bit is equal to "0", the UART interrupt request flag will not be influenced by the condition of the OERR or RXIF flags.

Bit 1 **TIIE**: Transmitter Idle interrupt enable control
0: Transmitter idle interrupt is disabled
1: Transmitter idle interrupt is enabled

This bit enables or disables the transmitter idle interrupt. If this bit is equal to "1" and when the transmitter idle flag TIDLE is set, due to a transmitter idle condition, the UART interrupt request flag will be set. If this bit is equal to "0", the UART interrupt request flag will not be influenced by the condition of the TIDLE flag.

Bit 0 **TEIE**: Transmitter Empty interrupt enable control
0: Transmitter empty interrupt is disabled
1: Transmitter empty interrupt is enabled
This bit enables or disables the transmitter empty interrupt. If this bit is equal to "1" and when the transmitter empty flag TXIF is set, due to a transmitter empty condition, the UART interrupt request flag will be set. If this bit is equal to "0", the UART interrupt request flag will not be influenced by the condition of the TXIF flag.

• UCR3 Register

The UCR3 register is used to enable the UART Single Wire Mode communication. As the name suggests in the single wire mode the UART communication can be implemented in one single line, RX/TX, together with the control of the RXEN and TXEN bits in the UCR2 register.

Bit	7	6	5	4	3	2	1	0
Name	—	—	—	—	—	—	—	SWM
R/W	—	—	—	—	—	—	—	R/W
POR	—	—	—	—	—	—	—	0

Bit 7~1 Unimplemented, read as "0"

Bit 0 **SWM**: Single Wire Mode enable control
0: Disable, the RX/TX pin is used as UART receiver function only
1: Enable, the RX/TX pin can be used as UART receiver or transmitter function controlled by the RXEN and TXEN bits
Note that when the Single Wire Mode is enabled, if both the RXEN and TXEN bits are high, the RX/TX pin will only be used as UART receiver input.

• TXR_RXR Register

The TXR_RXR register is the data register which is used to store the data to be transmitted on the TX pin or being received from the RX/TX pin.

Bit	7	6	5	4	3	2	1	0
Name	TXRX7	TXRX6	TXRX5	TXRX4	TXRX3	TXRX2	TXRX1	TXRX0
R/W	R/W	R/W	R/W	R/W	R/W	R/W	R/W	R/W
POR	x	x	x	x	x	x	x	x

"x": unknown

Bit 7~0 **TXRX7~ TXRX0**: UART Transmit/Receive Data bit 7 ~ bit 0

• BRDH Register

Bit	7	6	5	4	3	2	1	0
Name	D7	D6	D5	D4	D3	D2	D1	D0
R/W	R/W	R/W	R/W	R/W	R/W	R/W	R/W	R/W
POR	0	0	0	0	0	0	0	0

Bit 7~0 **D7~D0**: Baud rate divider high byte
The baud rate divider BRD (BRDH/BRDL) defines the UART clock divider ratio.
Baud Rate = f_H/(BRD+UMOD/8)
BRD=16~65535 or 8~65535 depending on BRDS
Note: 1. BRD value should not be set to less than 16 when BRDS=0 or less than 8 when BRDS=1, otherwise errors may occur.
2. The BRDL must be written first and then BRDH, otherwise errors may occur.
3. The BRDH cannot be modified during the transmission.

• **BRDL Register**

Bit	7	6	5	4	3	2	1	0
Name	D7	D6	D5	D4	D3	D2	D1	D0
R/W	R/W	R/W	R/W	R/W	R/W	R/W	R/W	R/W
POR	0	0	0	0	0	0	0	0

Bit 7~0 **D7~D0**: Baud rate divider low byte

The baud rate divider BRD (BRDH/BRDL) defines the UART clock divider ratio.

Baud Rate = f_H/(BRD+UMOD/8)

BRD = 16~65535 or 8~65535 depending on BRDS

Note: 1. BRD value should not be set to less than 16 when BRDS=0 or less than 8 when BRDS=1, otherwise errors may occur.
2. The BRDL must be written first and then BRDH, otherwise errors may occur.
3. The BRDL cannot be modified during the transmission.

• **UFCR Register**

The UFCR register is the FIFO control register which is used for UART modulation control, BRD range selection and trigger level selection for RXIF and interrupt.

Bit	7	6	5	4	3	2	1	0
Name	—	—	UMOD2	UMOD1	UMOD0	BRDS	RxFTR1	RxFTR0
R/W	—	—	R/W	R/W	R/W	R/W	R/W	R/W
POR	—	—	0	0	0	0	0	0

Bit 7~6 Unimplemented, read as “0”

Bit 5~3 **UMOD2~UMOD0**: UART Modulation Control bits

The modulation control bits are used to correct the baud rate of the received or transmitted UART signal. These bits determine if the extra UART clock cycle should be added in a UART bit time. The UMOD2~ UMOD0 will be added to internal accumulator for every UART bit time. Until a carry to bit 3, the corresponding UART bit time increases a UART clock cycle.

Bit 2 **BRDS**: BRD range selection
0: BRD range is from 16 to 65535
1: BRD range is from 8 to 65535

The BRDS is used to control the sampling point in a UART bit time. If the BRDS is cleared to zero, the sampling point will be BRD/2, BRD/2+1×f_H, and BRD/2+2×f_H in a UART bit time. If the BRDS is set high, the sampling point will be BRD/2-1×f_H, BRD/2, and BRD/2+2×f_H in a UART bit time.

Bit 1~0 **RxFTR1~ RxFTR0**: Receiver FIFO trigger level (bytes)
00: 4 bytes in Receiver FIFO
01: 1 or more bytes in Receiver FIFO
10: 2 or more bytes in Receiver FIFO
11: 3 or more bytes in Receiver FIFO

For the receiver these bits define the number of received data bytes in the Receiver FIFO that will trigger the RXIF bit being set high, an interrupt will also be generated if the RIEn bit is enabled. After the reset the receiver FIFO is empty.

Note: The BRDS bit cannot be modified during the transmission.

- **RxCNT Register**

The RxCNT register is the counter used to indicate the number of received data bytes in the Receiver FIFO which have not been read by the MCU. This register is read only.

Bit	7	6	5	4	3	2	1	0
Name	—	—	—	—	—	D2	D1	D0
R/W	—	—	—	—	—	R	R	R
POR	—	—	—	—	—	0	0	0

Bit 7~3 Unimplemented, read as "0"

Bit 2~0 **D2~D0**: Receiver FIFO counter
The RxCNT register is the counter used to indicate the number of receiver data bytes in Receiver FIFO which is not read by MCU. When Receiver FIFO receives one byte data, the RxCNT will increase by one; when the MCU reads one byte data from Receiver FIFO, the RxCNT will decrease by one. If there are 4 bytes of data in the Receiver FIFO, the 5th data will be saved in the shift register. If there is 6th data, the 6th data will be saved in the shift register. But the RxCNT remains the value of 4. The RxCNT will be cleared when reset occurs or UARTEN=1. This register is read only.

Baud Rate Generator

To setup the speed of the serial data communication, the UART function contains its own dedicated baud rate generator. The baud rate is controlled by its own internal free running 16-bit timer, the period of which is determined by two factors. The first of these is the value placed in BRDH/BRDL register and the second is the UART modulation control bits (UMOD2~UMOD0). If a baud rate BR is required with UART clock f_H.

$$f_H/BR = \text{Integer Part} + \text{Fractional Part}$$

The integer part is loaded into BRD (BRDH/BRDL). The fractional part is multiplied by 8 and rounded, then loaded into UMOD bit field as following:

$$BRD = TRUNC(f_H/BR)$$

$$UMOD = ROUND[MOD(f_H/BR)\times 8]$$

Therefore, the actual baud rate is as following:

$$\text{Baud rate} = f_H/[BRD+(UMOD/8)]$$

Calculating the Baud Rate and Error Values

For a clock frequency of 4MHz, determine the BRDH/BRDL register value, the actual baud rate and the error value for a desired baud rate of 230400.

From the above formula, the BRD = TRUNC(f_H/BR) = TRUNC(17.36111) = 17

The UMOD = ROUND[MOD(f_H/BR)×8] = ROUND(0.36111×8) = ROUND(2.88888) = 3

The actual Baud Rate = f_H/[BRD+(UMOD/8)] = 230215.83

Therefore the error is equal to (230215.83-230400)/230400 = -0.08%

Modulation Control Example

To get the best-fitting bit sequence for UART modulation control bits UMOD2~UMOD0, the following algorithm can be used: Firstly, the fractional part of the theoretical division factor is multiplied by 8. Then the product will be rounded and UMOD2~UMOD0 bits will be filled with the rounded value. The UMOD2~UMOD0 bits will be added to internal accumulator for every UART bit time. Until a carry to bit 3, the corresponding UART bit time increases a UART clock cycle. The following is an example using the fraction 0.36111 previously calculated: UMOD[2:0]= ROUND(0.36111×8)=011b.

Fraction Addition	Carry to Bit 3	UART Bit Time Sequence	Extra UART Clock Cycle
0000b + 0011b = 0011b	No	Start bit	No
0011b + 0011b = 0110b	No	D0	No
0110b + 0011b = 1001b	Yes	D1	Yes
1001b + 0011b = 1100b	No	D2	No
1100b + 0011b = 1111b	No	D3	No
1111b + 0011b = 0010b	Yes	D4	Yes
0010b + 0011b = 0101b	No	D5	No
0101b + 0011b = 1000b	Yes	D6	Yes
1000b + 0011b = 1011b	No	D7	No
1011b + 0011b = 1110b	No	Parity bit	No
1110b + 0011b = 0001b	Yes	Stop bit	Yes

Baud Rate Correction Example

The following figure presents an example using a baud rate of 230400 generated with UART clock f_H. The data format for the following figure is: eight data bits, parity enabled, no address bit; two stop bits.

The following figure shows three different frames:

- The upper frame is the correct one, with a bit-length of 17.36 f_H cycles (4000000/230400=17.36).
- The middle frame uses a rough estimate, with 17 f_H cycles for the bit length.
- The lower frame shows a corrected frame using the best fit for the UART modulation control bits UMOD2~UMOD0.

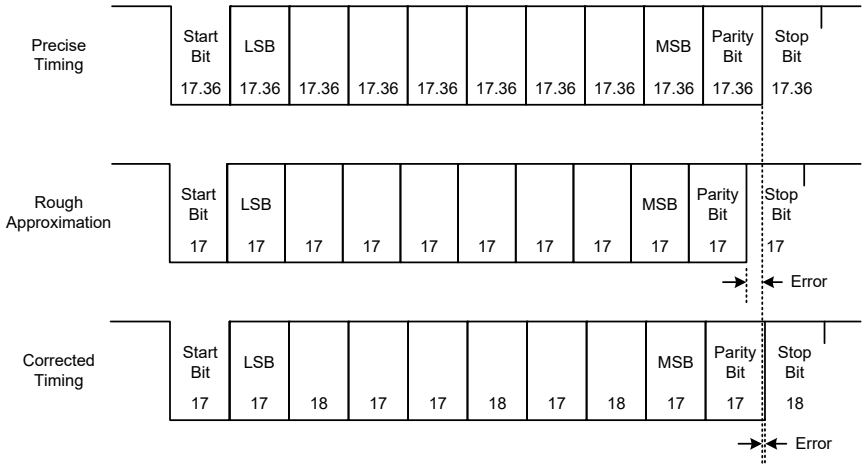

UART Setup and Control

For data transfer, the UART function utilizes a non-return-to-zero, more commonly known as NRZ, format. This is composed of one start bit, eight or nine data bits, and one or two stop bits. Parity is supported by the UART hardware, and can be set to be even, odd, mark, space or no parity. For the most common data format, 8 data bits along with no parity and one stop bit, denoted as 8, N, 1, is used as the default setting, which is the setting at power-on. The number of data bits and stop bits, along with the parity, are set by programming the corresponding BNO, PRT1~PRT0, PREN, and STOPS bits. The baud rate used to transmit and receive data is set using the internal 16-bit baud rate generator, while the data is transmitted and received LSB first. Although the UART transmitter and receiver are functionally independent, they both use the same data format and baud rate. In all cases stop bits will be used for data transmission.

Enabling/Disabling the UART Interface

The basic on/off function of the internal UART function is controlled using the UARTEN bit in the UCR1 register. If the UARTEN, TXEN and RXEN bits are set, then these two UART pins will act as normal TX output pin and RX/TX input pin respectively. If no data is being transmitted on the TX pin, then it will default to a logic high value.

Clearing the UARTEN bit will disable the TX and RX/TX pins and allow these two pins to be used as normal I/O or other pin-shared functional pins by configuring the corresponding pin-shared control bits. When the UART function is disabled the buffer will be reset to an empty condition, at the same time discarding any remaining residual data. Disabling the UART will also reset the error and status flags with bits TXEN, RXEN, TXBRK, RXIF, OERR, FERR, PERR and NF as well as register RxCNT being cleared while bits TIDLE, TXIF and RIDLE will be set. The remaining control bits in the UCR1, UCR2, UCR3, UFCR, BRDH and BRDL registers will remain unaffected. If the UARTEN bit in the UCR1 register is cleared while the UART is active, then all pending transmissions and receptions will be immediately suspended and the UART will be reset to a condition as defined above. If the UART is then subsequently re-enabled, it will restart again in the same configuration.

Data, Parity and Stop Bit Selection

The format of the data to be transferred is composed of various factors such as data bit length, parity on/off, parity type, address bits and the number of stop bits. These factors are determined by the setup of various bits within the UCR1and UCR2 registers. The BNO bit controls the number of data bits which can be set to either 8 or 9, the PRT1~PRT0 bits control the choice of odd, even, mark or space parity, the PREN bit controls the parity on/off function and the STOPS bit decides whether one or two stop bits are to be used. The following table shows various formats for data transmission. The address bit, which is the MSB of the data byte, identifies the frame as an address character or data if the address detect function is enabled. The number of stop bits, which can be either one or two, is independent of the data length and is only used for the transmitter. There is only one stop bit for the receiver.

Start Bit	Data Bits	Address Bit	Parity Bit	Stop Bit
Example of 8-bit Data Formats				
1	8	0	0	1
1	7	0	1	1
1	7	1	0	1
Example of 9-bit Data Formats				
1	9	0	0	1
1	8	0	1	1
1	8	1	0	1

Transmitter Receiver Data Format

The following diagram shows the transmit and receive waveforms for both 8-bit and 9-bit data formats.

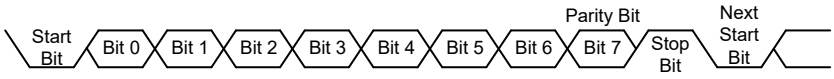

8-bit Data Format

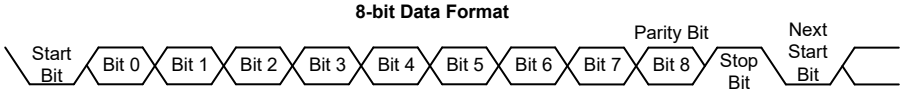

9-bit Data Format

UART Transmitter

Data word lengths of either 8 or 9 bits can be selected by programming the BNO bit in the UCR1 register. When the BNO bit is set, the word length will be set to 9 bits. In this case the 9th bit, which is the MSB, needs to be stored in the TX8 bit in the UCR1 register. At the transmitter core lies the Transmitter Shift Register, more commonly known as the TSR, whose data is obtained from the transmit data register, which is known as the TXR_RXR register. The data to be transmitted is loaded into this TXR_RXR register by the application program. The TSR register is not written to with new data until the stop bit from the previous transmission has been sent out. As soon as this stop bit has been transmitted, the TSR can then be loaded with new data from the TXR_RXR register, if it is available. It should be noted that the TSR register, unlike many other registers, is not directly mapped into the Data Memory area and as such is not available to the application program for direct read/write operations. An actual transmission of data will normally be enabled when the TXEN bit is set, but the data will not be transmitted until the TXR_RXR register has been loaded with data and the baud rate generator has defined a shift clock source. However, the transmission can also be initiated by first loading data into the TXR_RXR register, after which the TXEN bit can be set. When a transmission of data begins, the TSR is normally empty, in which case a transfer to the TXR_RXR register will result in an immediate transfer to the TSR. If during a transmission the TXEN bit is cleared, the transmission will immediately cease and the transmitter will be reset. The TX output pin can then be configured as the I/O or other pin-shared function by configuring the corresponding pin-shared control bits.

Transmitting Data

When the UART is transmitting data, the data is shifted on the TX pin from the shift register, with the least significant bit LSB first. In the transmit mode, the TXR_RXR register forms a buffer between the internal bus and the transmitter shift register. It should be noted that if 9-bit data format has been selected, then the MSB will be taken from the TX8 bit in the UCR1 register. The steps to initiate a data transfer can be summarized as follows:

- Make the correct selection of the BNO, PRT1~PRT0, PREN and STOPS bits to define the required word length, parity type and number of stop bits.
- Setup the BRDH, BRDL registers and UMOD2~UMOD0 bits to select the desired baud rate.
- Set the TXEN bit to ensure that the UART transmitter is enabled and the TX pin is used as a UART transmitter pin.
- Access the USR register and write the data that is to be transmitted into the TXR_RXR register. Note that this step will clear the TXIF bit.

This sequence of events can now be repeated to send additional data.

It should be noted that when TXIF=0, data will be inhibited from being written to the TXR_RXR register. Clearing the TXIF flag is always achieved using the following software sequence:

1. A USR register access
2. A TXR_RXR register write execution

The read-only TXIF flag is set by the UART hardware and if set indicates that the TXR_RXR register is empty and that other data can now be written into the TXR_RXR register without overwriting the previous data. If the TEIE bit is set then the TXIF flag will generate an interrupt.

During a data transmission, a write instruction to the TXR_RXR register will place the data into the TXR_RXR register, which will be copied to the shift register at the end of the present transmission. When there is no data transmission in progress, a write instruction to the TXR_RXR register will place the data directly into the shift register, resulting in the commencement of data transmission,

and the TXIF bit being immediately set. When a frame transmission is complete, which happens after stop bits are sent or after the break frame, the TIDLE bit will be set. To clear the TIDLE bit the following software sequence is used:

1. A USR register access
2. A TXR_RXR register write execution

Note that both the TXIF and TIDLE bits are cleared by the same software sequence.

Transmitting Break

If the TXBRK bit is set high and the state keeps for a time of greater than [(BRD+1)×t_H] while TIDLE=1, then break characters will be sent on the next transmission. Break character transmission consists of a start bit, followed by 13×N '0' bits and stop bits, where N=1, 2, etc. If a break character is to be transmitted then the TXBRK bit must be first set by the application program, and then cleared to generate the stop bits. Transmitting a break character will not generate a transmit interrupt. Note that a break condition length is at least 13 bits long. If the TXBRK bit is continually kept at a logic high level then the transmitter circuitry will transmit continuous break characters. After the application program has cleared the TXBRK bit, the transmitter will finish transmitting the last break character and subsequently send out one or two stop bits. The automatic logic highs at the end of the last break character will ensure that the start bit of the next frame is recognized.

UART Receiver

The UART is capable of receiving word lengths of either 8 or 9 bits. If the BNO bit is set, the word length will be set to 9 bits with the MSB being stored in the RX8 bit of the UCR1 register. At the receiver core lies the Receive Serial Shift Register, commonly known as the RSR. The data which is received on the RX/TX external input pin is sent to the data recovery block. The data recovery block operating speed is 16 times that of the baud rate, while the main receive serial shifter operates at the baud rate. After the RX/TX pin is sampled for the stop bit, the received data in RSR is transferred to the receive data register, if the register is empty. The data which is received on the external RX/TX pin is sampled three times by a majority detect circuit to determine the logic level that has been placed onto the RX/TX pin. It should be noted that the RSR register, unlike many other registers, is not directly mapped into the Data Memory area and as such is not available to the application program for direct read/write operations.

Receiving Data

When the UART receiver is receiving data, the data is serially shifted in on the external RX/TX pin, LSB first. In the read mode, the TXR_RXR register forms a buffer between the internal bus and the receiver shift register. The TXR_RXR register is a four-byte deep FIFO data buffer, where four bytes can be held in the FIFO while a fifth byte can continue to be received. Note that the application program must ensure that the data is read from TXR_RXR before the fifth byte has been completely shifted in, otherwise this fifth byte will be discarded and an overrun error OERR will be subsequently indicated. The steps to initiate a data transfer can be summarized as follows:

- Make the correct selection of BNO, PRT1~PRT0 and PREN bits to define the word length, parity type.
- Setup the BRDH, BRDL registers and the UMOD2~UMOD0 bits to select the desired baud rate.
- Set the RXEN bit to ensure that the RX/TX pin is used as a UART receiver pin.

At this point the receiver will be enabled which will begin to look for a start bit.

When a character is received the following sequence of events will occur:

- The RXIF bit in the USR register will be set when the TXR_RXR register has data available, the number of the available data bytes can be checked by polling the RxCNT register content.

- When the contents of the shift register have been transferred to the TXR_RXR register and reach receiver FIFO trigger level, if the RIE bit is set, an interrupt will be generated.
- If during reception, a frame error, noise error, parity error or an overrun error has been detected, then the error flags can be set.

The RXIF bit can be cleared using the following software sequence:

1. A USR register access
2. A TXR_RXR register read execution

Receiving Break

Any break character received by the UART will be managed as a framing error. The receiver will count and expect a certain number of bit times as specified by the values programmed into the BNO bit plus one stop bit. If the break is much longer than 13 bit times, the reception will be considered as complete after the number of bit times specified by BNO plus one stop bit. The RXIF bit is set, FERR is set, zeros are loaded into the receive data register, interrupts are generated if appropriate and the RIDLE bit is set. A break is regarded as a character that contains only zeros with the FERR flag set. If a long break signal has been detected, the receiver will regard it as a data frame including a start bit, data bits and the invalid stop bit and the FERR flag will be set. The receiver must wait for a valid stop bit before looking for the next start bit. The receiver will not make the assumption that the break condition on the line is the next start bit. The break character will be loaded into the buffer and no further data will be received until stop bits are received. It should be noted that the RIDLE read only flag will go high when the stop bits have not yet been received. The reception of a break character on the UART registers will result in the following:

- The framing error flag, FERR, will be set.
- The receive data register, TXR_RXR, will be cleared.
- The OERR, NF, PERR, RIDLE or RXIF flags will possibly be set.

Idle Status

When the receiver is reading data, which means it will be in between the detection of a start bit and the reading of a stop bit, the receiver status flag in the USR register, otherwise known as the RIDLE flag, will have a zero value. In between the reception of a stop bit and the detection of the next start bit, the RIDLE flag will have a high value, which indicates the receiver is in an idle condition.

Receiver Interrupt

The read only receive interrupt flag RXIF in the USR register is set by an edge generated by the receiver. An interrupt is generated if RIE=1, when a word is transferred from the Receive Shift Register, RSR, to the Receive Data Register, TXR_RXR. An overrun error can also generate an interrupt if RIE=1.

Managing Receiver Errors

Several types of reception errors can occur within the UART module, the following section describes the various types and how they are managed by the UART.

Overrun Error – OERR

The TXR_RXR register is composed of a four-byte deep FIFO data buffer, where four bytes can be held in the FIFO register, while a fifth byte can continue to be received. Before this fifth byte has been entirely shifted in, the data should be read from the TXR_RXR register. If this is not done, the overrun error flag OERR will be consequently indicated.

In the event of an overrun error occurring, the following will happen:

- The OERR flag in the USR register will be set.
- The TXR_RXR contents will not be lost.
- The shift register will be overwritten.
- An interrupt will be generated if the RIE bit is set.

The OERR flag can be cleared by an access to the USR register followed by a read to the TXR_RXR register.

Noise Error – NF

Over-sampling is used for data recovery to identify valid incoming data and noise. If noise is detected within a frame, the following will occur:

- The read only noise flag, NF, in the USR register will be set on the rising edge of the RXIF bit.
- Data will be transferred from the Shift register to the TXR_RXR register.
- No interrupt will be generated. However this bit rises at the same time as the RXIF bit which itself generates an interrupt.

Note that the NF flag is reset by an USR register read operation followed by a TXR_RXR register read operation.

Framing Error – FERR

The read only framing error flag, FERR, in the USR register, is set if a zero is detected instead of stop bits. If two stop bits are selected, both stop bits must be high; otherwise the FERR flag will be set. The FERR flag and the received data will be recorded in the USR and TXR_RXR registers respectively, and the flag is cleared in any reset.

Parity Error – PERR

The read only parity error flag, PERR, in the USR register, is set if the parity of the received word is incorrect. This error flag is only applicable if the parity is enabled, PREN=1, and if the parity type, odd, even, mark or space is selected. The read only PERRn flag and the received data will be recorded in the UnSR and TXR_RXRn registers respectively. It is cleared on any reset, it should be noted that the flags, FERRn and PERRn, in the UnSR register should first be read by the application program before reading the data word.

UART Interrupt Structure

Several individual UART conditions can generate a UART interrupt. When these conditions exist, a low pulse will be generated to get the attention of the microcontroller. These conditions are a transmitter data register empty, transmitter idle, receiver reaching FIFO trigger level, receiver overrun, address detect and an RX/TX pin wake-up. When any of these conditions are created, if the global interrupt enable bit and its corresponding interrupt control bit are enabled and the stack is not full, the program will jump to its corresponding interrupt vector where it can be serviced before returning to the main program. Four of these conditions have the corresponding USR register flags which will generate a UART interrupt if its associated interrupt enable control bit in the UCR2 register is set. The two transmitter interrupt conditions have their own corresponding enable control bits, while the two receiver interrupt conditions have a shared enable control bit. These enable bits can be used to mask out individual UART interrupt sources.

The address detect condition, which is also a UART interrupt source, does not have an associated flag, but will generate a UART interrupt when an address detect condition occurs if its function is enabled by setting the ADDEN bit in the UCR2 register. An RX/TX pin wake-up, which is also a UART interrupt source, does not have an associated flag, but will generate a UART interrupt if the

UART clock (f_H) source is switched off and the WAKE and RIE bits in the UCR2 register are set when a falling edge on the RX/TX pin occurs.

Note that the USR register flags are read only and cannot be cleared or set by the application program, neither will they be cleared when the program jumps to the corresponding interrupt servicing routine, as is the case for some of the other interrupts. The flags will be cleared automatically when certain actions are taken by the UART, the details of which are given in the UART register section. The overall UART interrupt can be disabled or enabled by the related interrupt enable control bits in the interrupt control registers of the microcontroller to decide whether the interrupt requested by the UART module is masked out or allowed.

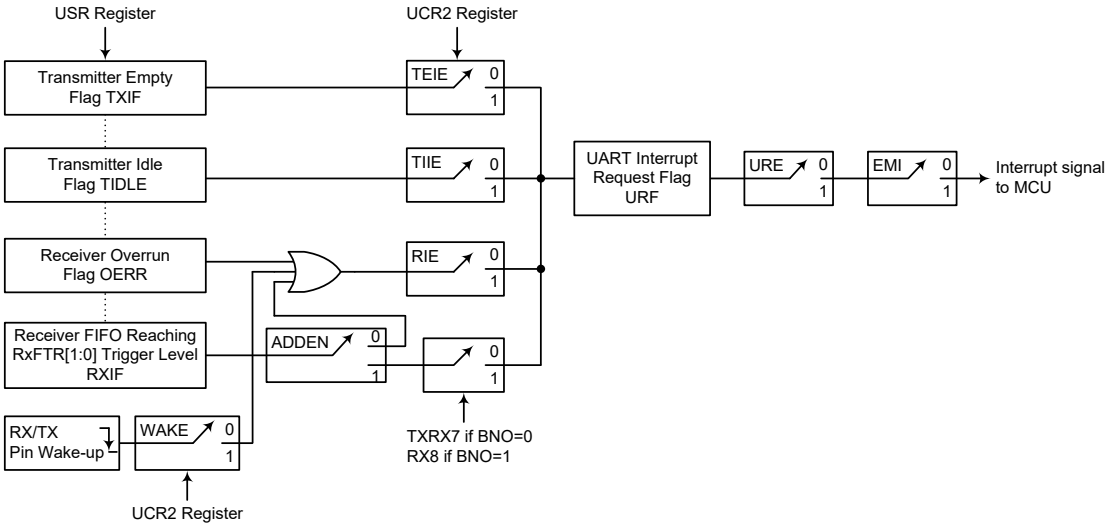

UART Interrupt Structure

Address Detect Mode

Setting the Address Detect Mode bit, ADDEN, in the UCR2 register, enables this special mode. If this bit is enabled, then an additional qualifier will be placed on the generation of a Receiver Data Available interrupt, which is requested by the RXIF flag. If the ADDEN bit is enabled, then when the data is available, an interrupt request will only be generated if the highest received bit has a high value. Note that the URE, MFnE and EMI interrupt enable bits must also be enabled for correct interrupt generation. The highest address bit is the 9th bit if BNO=1 or the 8th bit if BNO=0. If this bit is high, then the received word will be defined as an address rather than data. A Data Available interrupt will be generated every time the last bit of the received word is set. If the ADDEN bit is not enabled, then a Receiver Data Available interrupt will be generated each time the RXIF flag is set, irrespective of the data last bit status. The address detect mode and parity enable are mutually exclusive functions. Therefore if the address detect mode is enabled, then to ensure correct operation, the parity function should be disabled by resetting the parity enable bit PREN to zero.

ADDEN	9th Bit if BNO=1 8th Bit if BNO=0	UART Interrupt Generated
0	0	√
	1	√
1	0	×
	1	√

ADDEN Bit Function

UART Power Down and Wake-up

When the UART clock (f_H) is off, the UART will cease to function, all clock sources to the module are shutdown. If the UART clock (f_H) is off while a transmission is still in progress, then the transmission will be paused until the UART clock source derived from the microcontroller is activated. In a similar way, if the MCU enters the IDLE or SLEEP mode while receiving data, then the reception of data will likewise be paused. When the MCU enters the IDLE or SLEEP mode, note that the USR, UCR1, UCR2, UCR3, UFCR, RxCNT, TXR_RXR as well as the BRDH and BRDL registers will not be affected. It is recommended to make sure first that the UART data transmission or reception has been finished before the microcontroller enters the IDLE or SLEEP mode.

The UART function contains a receiver RX/TX pin wake-up function, which is enabled or disabled by the WAKE bit in the UCR2 register. If this bit, along with the UART enable bit, UARTEN, the receiver enable bit, RXEN and the receiver interrupt bit, RIE, are all set when the UART clock (f_H) is off, then a falling edge on the RX/TX pin will trigger an RX/TX pin wake-up UART interrupt. Note that as it takes certain system clock cycles after a wake-up, before normal microcontroller operation resumes, any data received during this time on the RX/TX pin will be ignored.

For a UART wake-up interrupt to occur, in addition to the bits for the wake-up being set, the global interrupt enable bit, EMI, and the UART interrupt enable bit, URE, must be set. If the EMI and URE bits are not set then only a wake up event will occur and no interrupt will be generated. Note also that as it takes certain system clock cycles after a wake-up before normal microcontroller resumes, the UART interrupt will not be generated until after this time has elapsed.

Software Control LCD Driver

The device has the capability of driving external LCD panels. The common pins for LCD driving, SCOM0~SCOM3, are pin-shared with certain functions on the I/O ports. The LCD signals (COM) are generated using the application program.

LCD Operation

An external LCD panel can be driven using the device by configuring the I/O pins as common pins. The LCD driver function is controlled using the SCOMC register which in addition to controlling the overall on/off function also R-type controls the bias current on the SCOMn pins. This enables the LCD COM to generate the necessary $V_{DD}/2$ voltage levels for LCD 1/2 bias operation.

The SCOMEN bit in the SCOMC register is the overall master control for the LCD driver. The LCD SCOMn pin is selected to be used for LCD driving by the corresponding pin-shared function selection bits. Note that the port control register does not need to first setup the pins as outputs to enable the LCD driver operation.

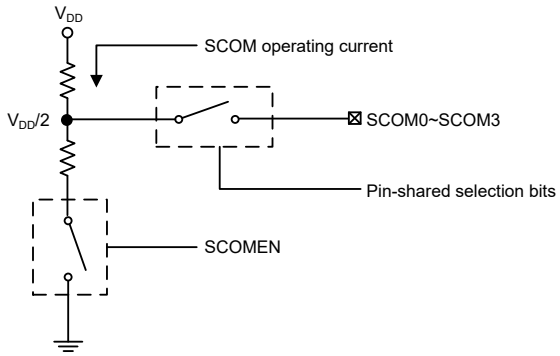

Software Control LCD Driver Structure

LCD Control Registers

The LCD COM driver enables a range of selections to be provided to suit the requirement of the LCD panel which is being used. The bias current choice is implemented using the ISEL1 and ISEL0 bits in the SCOMC register.

- **SCOMC Register**

Bit	7	6	5	4	3	2	1	0
Name	—	ISEL1	ISEL0	SCOMEN	—	—	—	—
R/W	—	R/W	R/W	R/W	—	—	—	—
POR	—	0	0	0	—	—	—	—

Bit 7 Unimplemented, read as "0"

Bit 6~5 **ISEL1~ISEL0**: Select resistor for R type LCD bias current (@V_{DD}=5V)
00: 2×100kΩ (1/2 Bias), I_{BIAS}=25μA
01: 2×50kΩ (1/2 Bias), I_{BIAS}=50μA
10: 2×25kΩ (1/2 Bias), I_{BIAS}=100μA
11: 2×12.5kΩ (1/2 Bias), I_{BIAS}=200μA

Bit 4 **SCOMEN**: Software controlled LCD drive function enable control
0: Disable
1: Enable
When the SCOMEN bit is set, it will turn on the DC path of resistor to generate 1/2×V_{DD} bias voltage.

Bit 3~0 Unimplemented, read as "0"

Cyclic Redundancy Check – CRC

The Cyclic Redundancy Check, CRC, calculation unit is an error detection technique test algorithm and uses to verify data transmission or storage data correctness. A CRC calculation takes a data stream or a block of data as input and generates a 16-bit output remainder. Ordinarily, a data stream is suffixed by a CRC code and used as a checksum when being sent or stored. Therefore, the received or restored data stream is calculated by the same generator polynomial as described in the following section.

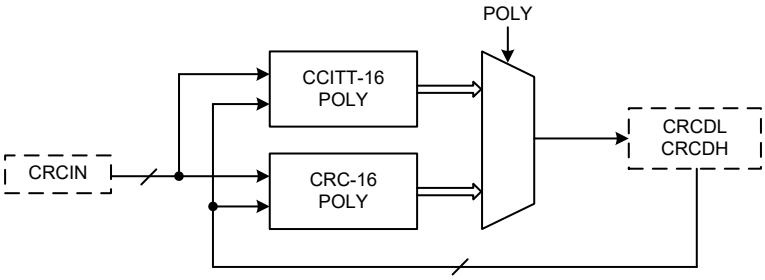

CRC Block Diagram

CRC Registers

The CRC generator contains an 8-bit CRC data input register, CRCIN, and a CRC checksum register pair, CRCDH and CRCDL. The CRCIN register is used to input new data and the CRCDH and CRCDL registers are used to hold the previous CRC calculation result. A CRC control register, CRCCR, is used to select which CRC generating polynomial is used.

Register Name	Bit							
	7	6	5	4	3	2	1	0
CRCIN	D7	D6	D5	D4	D3	D2	D1	D0
CRCDL	D7	D6	D5	D4	D3	D2	D1	D0
CRCDH	D15	D14	D13	D12	D11	D10	D9	D8
CRCCR	—	—	—	—	—	—	—	POLY

CRC Register List

- **CRCIN Register**

Bit	7	6	5	4	3	2	1	0
Name	D7	D6	D5	D4	D3	D2	D1	D0
R/W	R/W	R/W	R/W	R/W	R/W	R/W	R/W	R/W
POR	0	0	0	0	0	0	0	0

Bit 7~0 **D7~D0**: CRC input data register

- **CRCDL Register**

Bit	7	6	5	4	3	2	1	0
Name	D7	D6	D5	D4	D3	D2	D1	D0
R/W	R/W	R/W	R/W	R/W	R/W	R/W	R/W	R/W
POR	0	0	0	0	0	0	0	0

Bit 7~0 **D7~D0**: 16-bit CRC checksum low byte data register

- **CRCDH Register**

Bit	7	6	5	4	3	2	1	0
Name	D15	D14	D13	D12	D11	D10	D9	D8
R/W	R/W	R/W	R/W	R/W	R/W	R/W	R/W	R/W
POR	0	0	0	0	0	0	0	0

Bit 7~0 **D15~D8**: 16-bit CRC checksum high byte data register

- **CRCCR Register**

Bit	7	6	5	4	3	2	1	0
Name	—	—	—	—	—	—	—	POLY
R/W	—	—	—	—	—	—	—	R/W
POR	—	—	—	—	—	—	—	0

Bit 7~1 Unimplemented, read as “0”

Bit 0 **POLY**: 16-bit CRC generating polynomial selection
0: CRC-CCITT: $X^{16}+X^{12}+X^{5}+1$
1: CRC-16: $X^{16}+X^{15}+X^{2}+1$

CRC Operation

The CRC generator provides the 16-bit CRC result calculation based on the CRC16 and CCITT CRC16 polynomials. In this CRC generator, there are only these two polynomials available for the numeric values calculation. It can not support the 16-bit CRC calculations based on any other polynomials.

The following two expressions can be used for the CRC generating polynomial which is determined using the POLY bit in the CRC control register, CRCCR. The CRC calculation result is called as the CRC checksum, CRCSUM, and stored in the CRC checksum register pair, CRCDH and CRCDL.

- CRC-CCITT: $X^{16}+X^{12}+X^{5}+1$
- CRC-16: $X^{16}+X^{15}+X^{2}+1$

CRC Computation

Each write operation to the CRCIN register creates a combination of the previous CRC value stored in the CRCDH and CRCDL registers and the new data input. The CRC unit calculates the CRC data register value is based on byte by byte. It will take one MCU instruction cycle to calculate the CRC checksum.

CRC Calculation Procedures:

1. Clear the checksum register pair, CRCDH and CRCDL.
2. Execute an “Exclusive OR” operation with the 8-bit input data byte and the 16-bit CRCSUM high byte. The result is called the temporary CRCSUM.
3. Shift the temporary CRCSUM value left by one bit and move a “0” into the LSB.
4. Check the shifted temporary CRCSUM value after procedure 3.

   If the MSB is 0, then this shifted temporary CRCSUM will be considered as a new temporary CRCSUM.

   Otherwise, execute an “Exclusive OR” operation with the shifted temporary CRCSUM in procedure 3 and a data “8005H”. Then the operation result will be regarded as the new temporary CRCSUM.

   Note that the data to be perform an “Exclusive OR” operation is “8005H” for the CRC-16 polynomial while for the CRC-CCITT polynomial the data is “1021H”.
5. Repeat the procedure 3 ~ procedure 4 until all bits of the input data byte are completely calculated.
6. Repeat the procedure 2 ~ procedure 5 until all of the input data bytes are completely calculated. Then, the latest calculated result is the final CRC checksum, CRCSUM.

CRC Calculation Examples

- Write 1 byte input data into the CRCIN register and the corresponding CRC checksum are individually calculated as the following table shown.

CRC Data Input / CRC Polynomial	00H	01H	02H	03H	04H	05H	06H	07H
CRC-CCITT ($X^{16}+X^{12}+X^5+1$)	0000H	1021H	2042H	3063H	4084H	50A5H	60C6H	70E7H
CRC-16 ($X^{16}+X^{15}+X^2+1$)	0000H	8005H	800FH	000AH	801BH	001EH	0014H	8011H

Note: The initial value of the CRC checksum register pair, CRCDH and CRCDL, is zero before each CRC input data is written into the CRCIN register.

- Write 4 bytes input data into the CRCIN register sequentially and the CRC checksum are sequentially listed in the following table.

CRC Data Input / CRC Polynomial	CRCIN=78H→56H→34H→12H
CRC-CCITT ($X^{16}+X^{12}+X^5+1$)	(CRCDH, CRCDL)=FF9FH→BBC3H→A367H→D0FAH
CRC-16 ($X^{16}+X^{15}+X^2+1$)	(CRCDH, CRCDL)=0110H→91F1H→F2DEhH→5C43H

Note: The initial value of the CRC checksum register pair, CRCDH and CRCDL, is zero before the sequential CRC data input operation.

Program Memory CRC Checksum Calculation Example

1. Clear the checksum register pair, CRCDH and CRCDL.
2. Select the CRC-CCITT or CRC-16 polynomial as the generating polynomial using the POLY bit in the CRCCR register.
3. Execute the table read instruction to read the program memory data value.
4. Write the table data low byte into the CRCIN register and execute the CRC calculation with the current CRCSUM value. Then a new CRCSUM result will be obtained and stored in the CRC checksum register pair, CRCDH and CRCDL.
5. Write the table data high byte into the CRCIN register and execute the CRC calculation with the current CRCSUM value. Then a new CRCSUM result will be obtained and stored in the CRC checksum register pair, CRCDH and CRCDL.
6. Repeat the procedure 3 ~ procedure 5 to read the next program memory data value and execute the CRC calculation until all program memory data are read followed by the sequential CRC calculation. Then the value in the CRC checksum register pair is the final CRC calculation result.

Interrupts

Interrupts are an important part of any microcontroller system. When an external event or an internal function such as a Timer Module or an A/D converter requires microcontroller attention, their corresponding interrupt will enforce a temporary suspension of the main program allowing the microcontroller to direct attention to their respective needs. The device contains several external interrupt and internal interrupts functions. The external interrupts are generated by the action of the external INT0~INT3 pins, while the internal interrupts are generated by various internal functions such as the TMs, Time Base, EEPROM, SIM, UART and the A/D converter, etc.

The various interrupt enable bits, together with their associated request flags, are shown in the accompanying diagrams with their order of priority. Some interrupt sources have their own individual vector while others share the same multi-function interrupt vector.

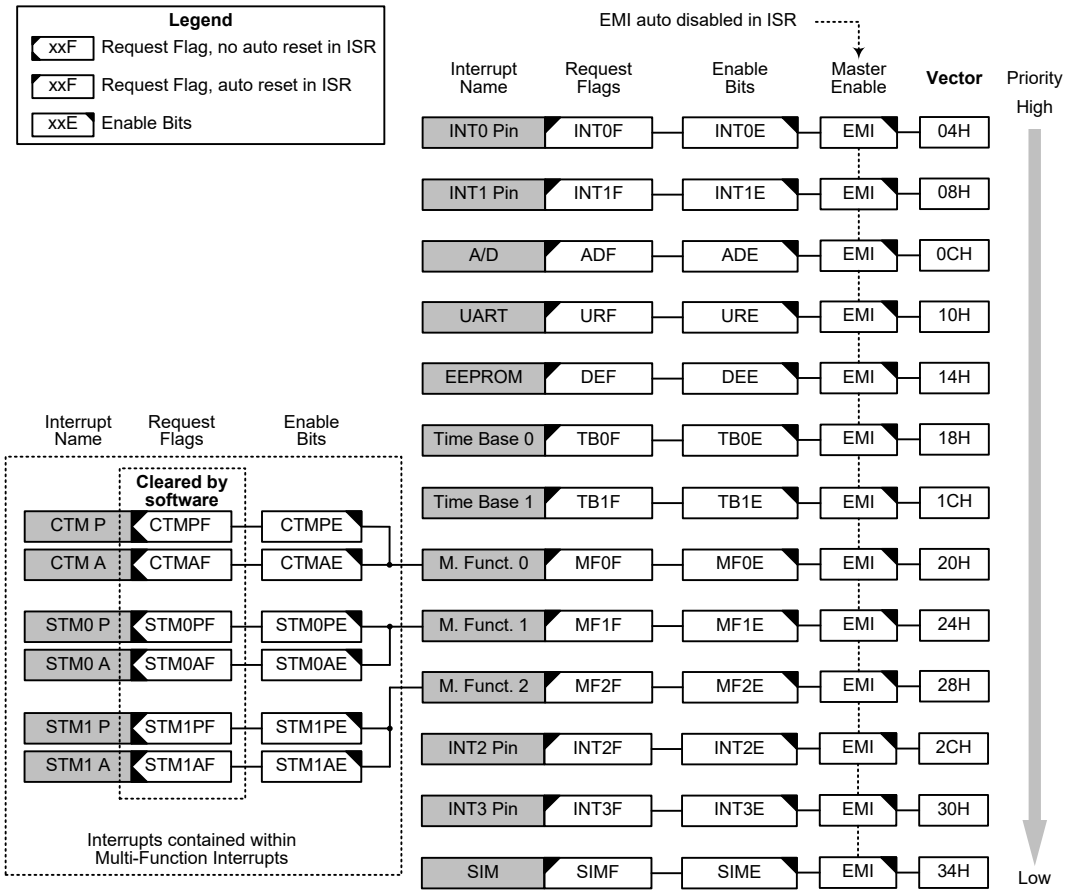

Interrupt Structure

Interrupt Registers

Overall interrupt control, which basically means the setting of request flags when certain microcontroller conditions occur and the setting of interrupt enable bits by the application program, is controlled by a series of registers, located in the Special Purpose Data Memory, as shown in the accompanying table. The number of registers depends upon the device chosen but fall into three categories. The first is the INTC0~INTC3 registers which setup the primary interrupts, the second is the MFI0~MFI2 registers which setup the Multi-function interrupts. Finally there is an INTEG register to setup the external interrupt trigger edge type.

Each register contains a number of enable bits to enable or disable individual interrupts as well as interrupt flags to I ndicate the presence of an interrupt request. The naming convention of these follows a specific pattern. First is listed an abbreviated interrupt type, then the (optional) number of that interrupt followed by either an "E" for enable/disable bit or "F" for request flag.

Function	Enable Bit	Request Flag	Notes
Global	EMI	—	—
INTn Pins	INTnE	INTnF	n=0~3
A/D Converter	ADE	ADF	—
Multi-function	MFnE	MFnF	n=0~2
Time Base	TBnE	TBnF	n=0~1
SIM Interface	SIME	SIMF	—
UART Interface	URE	URF	—
EEPROM	DEE	DEF	—
CTM	CTMPE	CTMPF	—
	CTMAE	CTMAF	
STM	STMnPE	STMnPF	n=0~1
	STMnAE	STMnAF	

Interrupt Register Bit Naming Conventions

Register Name	Bit							
	7	6	5	4	3	2	1	0
INTEG	INT3S1	INT3S0	INT2S1	INT2S0	INT1S1	INT1S0	INT0S1	INT0S0
INTC0	—	ADF	INT1F	INT0F	ADE	INT1E	INT0E	EMI
INTC1	TB1F	TB0F	DEF	URF	TB1E	TB0E	DEE	URE
INTC2	INT2F	MF2F	MF1F	MF0F	INT2E	MF2E	MF1E	MF0E
INTC3	—	—	SIMF	INT3F	—	—	SIME	INT3E
MFI0	—	—	CTMAF	CTMPF	—	—	CTMAE	CTMPE
MFI1	—	—	STM0AF	STM0PF	—	—	STM0AE	STM0PE
MFI1	—	—	STM1AF	STM1PF	—	—	STM1AE	STM1PE

Interrupt Register List

- **INTEG Register**

Bit	7	6	5	4	3	2	1	0
Name	INT3S1	INT3S0	INT2S1	INT2S0	INT1S1	INT1S0	INT0S1	INT0S0
R/W	R/W	R/W	R/W	R/W	R/W	R/W	R/W	R/W
POR	0	0	0	0	0	0	0	0

Bit 7~6 **INT3S1~INT3S0**: Interrupt edge control for INT3 pin
00: Disable
01: Rising edge
10: Falling edge
11: Rising and falling edges

Bit 5~4 **INT2S1~INT2S0**: Interrupt edge control for INT2 pin
00: Disable
01: Rising edge
10: Falling edge
11: Rising and falling edges

Bit 3~2 **INT1S1~INT1S0**: Interrupt edge control for INT1 pin
00: Disable
01: Rising edge
10: Falling edge
11: Rising and falling edges

Bit 1~0 **INT0S1~INT0S0**: Interrupt edge control for INT0 pin
00: Disable
01: Rising edge
10: Falling edge
11: Rising and falling edges

• **INTC0 Register**

Bit	7	6	5	4	3	2	1	0
Name	—	ADF	INT1F	INT0F	ADE	INT1E	INT0E	EMI
R/W	—	R/W	R/W	R/W	R/W	R/W	R/W	R/W
POR	—	0	0	0	0	0	0	0

Bit 7 Unimplemented, read as "0"

Bit 6 **ADF**: A/D Converter interrupt request flag
0: No request
1: Interrupt request

Bit 5 **INT1F**: INT1 interrupt request flag
0: No request
1: Interrupt request

Bit 4 **INT0F**: INT0 interrupt request flag
0: No request
1: Interrupt request

Bit 3 **ADE**: A/D Converter interrupt control
0: Disable
1: Enable

Bit 2 **INT1E**: INT1 interrupt control
0: Disable
1: Enable

Bit 1 **INT0E**: INT0 interrupt control
0: Disable
1: Enable

Bit 0 **EMI**: Global interrupt control
0: Disable
1: Enable

• **INTC1 Register**

Bit	7	6	5	4	3	2	1	0
Name	TB1F	TB0F	DEF	URF	TB1E	TB0E	DEE	URE
R/W	R/W	R/W	R/W	R/W	R/W	R/W	R/W	R/W
POR	0	0	0	0	0	0	0	0

Bit 7 **TB1F**: Time Base 1 interrupt request flag
0: No request
1: Interrupt request

Bit 6 **TB0F**: Time Base 0 interrupt request flag
0: No request
1: Interrupt request

Bit 5 **DEF**: Data EEPROM interrupt request flag
0: No request
1: Interrupt request

Bit 4 **URF**: UART interrupt request flag
0: No request
1: Interrupt request

Bit 3 **TB1E**: Time Base 1 interrupt control
0: Disable
1: Enable

Bit 2 **TB0E**: Time Base01 interrupt control
0: Disable
1: Enable

Bit 1 **DEE**: Data EEPROM interrupt control
0: Disable
1: Enable

Bit 0 **URE**: UART interrupt control
0: Disable
1: Enable

• **INTC2 Register**

Bit	7	6	5	4	3	2	1	0
Name	INT2F	MF2F	MF1F	MF0F	INT2E	MF2E	MF1E	MF0E
R/W	R/W	R/W	R/W	R/W	R/W	R/W	R/W	R/W
POR	0	0	0	0	0	0	0	0

Bit 7 **INT2F**: INT2 interrupt request flag
0: No request
1: Interrupt request

Bit 6 **MF2F**: Multi-function 2 interrupt request flag
0: No request
1: Interrupt request

Bit 5 **MF1F**: Multi-function 1 interrupt request flag
0: No request
1: Interrupt request

Bit 4 **MF0F**: Multi-function 0 interrupt request flag
0: No request
1: Interrupt request

Bit 3 **INT2E**: INT2 interrupt control
0: Disable
1: Enable

Bit 2 **MF2E**: Multi-function 2 interrupt control
0: Disable
1: Enable

Bit 1 **MF1E**: Multi-function 1 interrupt control
0: Disable
1: Enable

Bit 0 **MF0E**: Multi-function 0 interrupt control
0: Disable
1: Enable

• **INTC3 Register**

Bit	7	6	5	4	3	2	1	0
Name	—	—	SIMF	INT3F	—	—	SIME	INT3E
R/W	—	—	R/W	R/W	—	—	R/W	R/W
POR	—	—	0	0	—	—	0	0

Bit 7~6 Unimplemented, read as "0"

Bit 5 **SIMF**: SIM interrupt request flag
0: No request
1: Interrupt request

Bit 4 **INT3F**: INT3 interrupt request flag
0: No request
1: Interrupt request

Bit 3~2 Unimplemented, read as "0"

Bit 1 **SIME**: SIM interrupt control
0: Disable
1: Enable

Bit 0 **INT3E**: INT3 interrupt control
0: Disable
1: Enable

• **MFI0 Register**

Bit	7	6	5	4	3	2	1	0
Name	—	—	CTMAF	CTMPF	—	—	CTMAE	CTMPE
R/W	—	—	R/W	R/W	—	—	R/W	R/W
POR	—	—	0	0	—	—	0	0

Bit 7~6 Unimplemented, read as "0"

Bit 5 **CTMAF**: CTM Comparator A match interrupt request flag
0: No request
1: Interrupt request
Note that this bit must be cleared to zero by the application program when the interrupt is serviced.

Bit 4 **CTMPF**: CTM Comparator P match interrupt request flag
0: No request
1: Interrupt request
Note that this bit must be cleared to zero by the application program when the interrupt is serviced.

Bit 3~2 Unimplemented, read as "0"

Bit 1 **CTMAE**: CTM Comparator A match interrupt control
0: Disable
1: Enable

Bit 0 **CTMPE**: CTM Comparator P match interrupt control
0: Disable
1: Enable

• **MFI1 Register**

Bit	7	6	5	4	3	2	1	0
Name	—	—	STM0AF	STM0PF	—	—	STM0AE	STM0PE
R/W	—	—	R/W	R/W	—	—	R/W	R/W
POR	—	—	0	0	—	—	0	0

Bit 7~6 Unimplemented, read as "0"

Bit 5 **STM0AF**: STM0 Comparator A match interrupt request flag
0: No request
1: Interrupt request
Note that this bit must be cleared to zero by the application program when the interrupt is serviced.

Bit 4 **STM0PF**: STM0 Comparator P match interrupt request flag
0: No request
1: Interrupt request
Note that this bit must be cleared to zero by the application program when the interrupt is serviced.

Bit 3~2 Unimplemented, read as "0"

Bit 1 **STM0AE**: STM0 Comparator A match interrupt control
0: Disable
1: Enable

Bit 0 **STM0PE**: STM0 Comparator P match interrupt control
0: Disable
1: Enable

• **MFI2 Register**

Bit	7	6	5	4	3	2	1	0
Name	—	—	STM1AF	STM1PF	—	—	STM1AE	STM1PE
R/W	—	—	R/W	R/W	—	—	R/W	R/W
POR	—	—	0	0	—	—	0	0

Bit 7~6 Unimplemented, read as "0"

Bit 5 **STM1AF**: STM1 Comparator A match interrupt request flag
0: No request
1: Interrupt request
Note that this bit must be cleared to zero by the application program when the interrupt is serviced.

Bit 4 **STM1PF**: STM1 Comparator P match interrupt request flag
0: No request
1: Interrupt request
Note that this bit must be cleared to zero by the application program when the interrupt is serviced.

Bit 3~2 Unimplemented, read as "0"

Bit 1 **STM1AE**: STM1 Comparator A match interrupt control
0: Disable
1: Enable

Bit 0 **STM1PE**: STM1 Comparator P match interrupt control
0: Disable
1: Enable

Interrupt Operation

When the conditions for an interrupt event occur, such as a TM Comparator P or Comparator A or A/D conversion completion, etc, the relevant interrupt request flag will be set. Whether the request flag actually generates a program jump to the relevant interrupt vector is determined by the condition of the interrupt enable bit. If the enable bit is set high then the program will jump to its relevant vector; if the enable bit is zero then although the interrupt request flag is set an actual interrupt will not be generated and the program will not jump to the relevant interrupt vector. The global interrupt enable bit, if cleared to zero, will disable all interrupts.

When an interrupt is generated, the Program Counter, which stores the address of the next instruction to be executed, will be transferred onto the stack. The Program Counter will then be loaded with a new address which will be the value of the corresponding interrupt vector. The microcontroller will then fetch its next instruction from this interrupt vector. The instruction at this vector will usually be a JMP which will jump to another section of program which is known as the interrupt service routine. Here is located the code to control the appropriate interrupt. The interrupt service routine must be terminated with a RETI, which retrieves the original Program Counter address from the stack and allows the microcontroller to continue with normal execution at the point where the interrupt occurred.

Once an interrupt subroutine is serviced, all other interrupts will be blocked, as the global interrupt enable bit, EMI bit will be cleared automatically. This will prevent any further interrupt nesting from occurring. However, if other interrupt requests occur during this interval, although the interrupt will not be immediately serviced, the request flag will still be recorded.

If an interrupt requires immediate servicing while the program is already in another interrupt service routine, the EMI bit should be set after entering the routine, to allow interrupt nesting. If the stack is full, the interrupt request will not be acknowledged, even if the related interrupt is enabled, until the Stack Pointer is decremented. If immediate service is desired, the stack must be prevented from becoming full. In case of simultaneous requests, the Interrupt Structure diagram shows the priority that is applied. All of the interrupt request flags when set will wake up the device if it is in SLEEP or IDLE Mode, however to prevent a wake-up from occurring the corresponding flag should be set before the device is in SLEEP or IDLE Mode.

External Interrupts

The external interrupts are controlled by signal transitions on the pins INT0~INT3. An external interrupt request will take place when the external interrupt request flags, INT0F~INT3F, are set, which will occur when a transition, whose type is chosen by the edge select bits, appears on the external interrupt pins. To allow the program to branch to its respective interrupt vector address, the global interrupt enable bit, EMI, and respective external interrupt enable bit, INT0E~INT3E, must first be set. Additionally the correct interrupt edge type must be selected using the INTEG register to enable the external interrupt function and to choose the trigger edge type. As the external interrupt pins are pin-shared with I/O pins, they can only be configured as external interrupt pins if their external interrupt enable bit in the corresponding interrupt register has been set and the external interrupt pin is selected by the corresponding pin-shared function selection bits. The pin must also be setup as an input by setting the corresponding bit in the port control register. When the interrupt is enabled, the stack is not full and the correct transition type appears on the external interrupt pin, a subroutine call to the external interrupt vector, will take place. When the interrupt is serviced, the external interrupt request flags, INT0F~INT3F, will be automatically reset and the EMI bit will be automatically cleared to disable other interrupts. Note that any pull-high resistor selections on the external interrupt pins will remain valid even if the pin is used as an external interrupt input.

The INTEG register is used to select the type of active edge that will trigger the external interrupt. A choice of either rising or falling or both edge types can be chosen to trigger an external interrupt. Note that the INTEG register can also be used to disable the external interrupt function.

A/D Converter Interrupt

An A/D Converter Interrupt request will take place when the A/D Converter Interrupt request flag, ADF, is set, which occurs when the A/D conversion process finishes. To allow the program to branch to its interrupt vector address, the global interrupt enable bit, EMI, and A/D Interrupt enable bit, ADE, must first be set. When the interrupt is enabled, the stack is not full and the A/D conversion process has ended, a subroutine call to the A/D Converter Interrupt vector, will take place. When the interrupt is serviced, the A/D Converter Interrupt flag, ADF, will be automatically cleared. The EMI bit will also be automatically cleared to disable other interrupts.

Multi-function Interrupts

Within the device there are three Multi-function interrupts. Unlike the other independent interrupts, these interrupts have no independent source, but rather are formed from other existing interrupt sources, namely the TM interrupts.

A Multi-function interrupt request will take place when any of the Multi-function interrupt request flags, MFnF, is set. The Multi-function interrupt flags will be set when any of their included functions generate an interrupt request flag. To allow the program to branch to its respective interrupt vector address, when the Multi-function interrupt is enabled and the stack is not full, and one of the interrupts contained within each of Multi-function interrupt occurs, a subroutine call to the relevant Multi-function interrupt vector will take place. When the interrupt is serviced, the related Multi-Function request flag will be automatically reset and the EMI bit will be automatically cleared to disable other interrupts.

However, it must be noted that, although the Multi-function Interrupt request flags will be automatically reset when the interrupt is serviced, the request flags from the original source of the Multi-function interrupts will not be automatically reset and must be manually reset by the application program.

Timer Module Interrupts

The Compact and Standard type TMs each has two interrupts, one comes from the comparator A match situation and the other comes from the comparator P match situation. All of the TM interrupts are contained within the Multi-function Interrupts. For all of the TM Types there are two interrupt request flags and two interrupt enable bits. A TM interrupt request will take place when any of the TM request flags are set, a situation which occurs when a TM comparator P or A match situation happens.

To allow the program to branch to their respective interrupt vector addresses, the global interrupt enable bit, EMI, respective TM Interrupt enable bit, and relevant Multi-function Interrupt enable bit, MFnE, must first be set. When the interrupt is enabled, the stack is not full and a TM comparator match situation occurs, a subroutine call to the relevant Multi-function Interrupt vector location, will take place. When the TM interrupt is serviced, the EMI bit will be automatically cleared to disable other interrupts. However, only the related MFnF flag will be automatically cleared. As the TM interrupt request flags will not be automatically cleared, they have to be cleared by the application program.

EEPROM Interrupt

An EEPROM Interrupt request will take place when the EEPROM Interrupt request flag, DEF, is set, which occurs when an EEPROM erase or write cycle ends. To allow the program to branch to its interrupt vector address, the global interrupt enable bit, EMI, and EEPROM Interrupt enable bit, DEE, must first be set. When the interrupt is enabled, the stack is not full and an EEPROM erase or write cycle ends, a subroutine call to the EEPROM Interrupt vector will take place. When the EEPROM Interrupt is serviced, the EEPROM Interrupt flag, DEF, will be automatically cleared. The EMI bit will also be automatically cleared to disable other interrupts.

Time Base Interrupts

The function of the Time Base Interrupts is to provide regular time signals in the form of an internal interrupt. They are controlled by the overflow signals from their respective timer functions. When these happens their respective interrupt request flags, TB0F or TB1F will be set. To allow the program to branch to their respective interrupt vector addresses, the global interrupt enable bit, EMI and Time Base enable bits, TB0E or TB1E, must first be set. When the interrupt is enabled, the stack is not full and the Time Base overflows, a subroutine call to their respective vector locations will take place. When the interrupt is serviced, the respective interrupt request flag, TB0F or TB1F, will be automatically cleared, the EMI bit will also be automatically cleared to disable other interrupts.

The purpose of the Time Base Interrupts is to provide an interrupt signal at fixed time periods. Its clock source, f_{PSC}, originates from the internal clock source f_{SYS}, $f_{SYS}/4$ or f_{SUB} and then passes through a divider, the division ratio of which is selected by programming the appropriate bits in the TB0C and TB1C registers to obtain longer interrupt periods whose value ranges. The clock cource that generate f_{PSC}, which in turn controls the Time Base interrupt period, is selected using the CLKSEL[1:0] bits in the PSCR register.

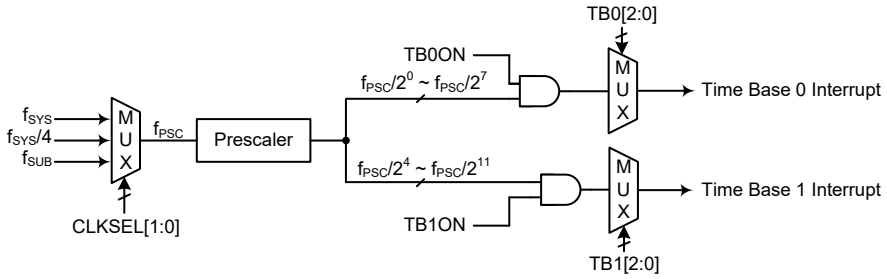

Time Base Interrupts

- **PSCR Register**

Bit	7	6	5	4	3	2	1	0
Name	—	—	—	—	—	—	CLKSEL1	CLKSEL0
R/W	—	—	—	—	—	—	R/W	R/W
POR	—	—	—	—	—	—	0	0

Bit 7~2 Unimplemented, read as "0"

Bit 1~0 **CLKSEL1~CLKSEL0**: Prescaler clock source f_{PSC} selection
00: f_{SYS}
01: $f_{SYS}/4$
10/11: f_{SUB}

• **TB0C Register**

Bit	7	6	5	4	3	2	1	0
Name	TB0ON	—	—	—	—	TB02	TB01	TB00
R/W	R/W	—	—	—	—	R/W	R/W	R/W
POR	0	—	—	—	—	0	0	0

Bit 7 **TB0ON**: Time Base 0 Enable Control
0: Disable
1: Enable

Bit 6~3 Unimplemented, read as "0"

Bit 2~0 **TB02~TB00**: Time Base 0 time-out period selection
000: $2^0/f_{PSC}$
001: $2^1/f_{PSC}$
010: $2^2/f_{PSC}$
011: $2^3/f_{PSC}$
100: $2^4/f_{PSC}$
101: $2^5/f_{PSC}$
110: $2^6/f_{PSC}$
111: $2^7/f_{PSC}$

• **TB1C Register**

Bit	7	6	5	4	3	2	1	0
Name	TB1ON	—	—	—	—	TB12	TB11	TB10
R/W	R/W	—	—	—	—	R/W	R/W	R/W
POR	0	—	—	—	—	0	0	0

Bit 7 **TB1ON**: Time Base 1 Enable Control
0: Disable
1: Enable

Bit 6~3 Unimplemented, read as "0"

Bit 2~0 **TB12~TB10**: Time Base 1 time-out period selection
000: $2^4/f_{PSC}$
001: $2^5/f_{PSC}$
010: $2^6/f_{PSC}$
011: $2^7/f_{PSC}$
100: $2^8/f_{PSC}$
101: $2^9/f_{PSC}$
110: $2^{10}/f_{PSC}$
111: $2^{11}/f_{PSC}$

Serial Interface Module Interrupt

The Serial Interface Module Interrupt is also known as the SIM interrupt. A SIM Interrupt request will take place when the SIM Interrupt request flag, SIMF, is set, which occurs when a byte of data has been received or transmitted by the SIM interface, an I^2C slave address match or I^2C bus time-out occurs. To allow the program to branch to its interrupt vector address, the global interrupt enable bit, EMI, and SIM Interrupt enable bit, SIME, must first be set. When the interrupt is enabled, the stack is not full and any of the above described situations occurs, a subroutine call to the corresponding SIM Interrupt vector, will take place. When the interrupt is serviced, the SIMF flag will be automatically cleared and the EMI bit will be automatically cleared to disable other interrupts.

UART Interrupt

The UART Interrupt is controlled by several UART transfer conditions. When one of these conditions occurs, an interrupt pulse will be generated to get the attention of the microcontroller. These conditions are a transmitter data register empty, transmitter idle, receiver reaching FIFO trigger level, receiver overrun, address detect and an RX/TX pin wake-up. To allow the program to branch to their interrupt vector addresses, the global interrupt enable bit, EMI, and UART Interrupt enable bit, URE, must first be set. When the interrupt is enabled, the stack is not full and any of the conditions described above occurs, a subroutine call to the corresponding UART Interrupt vector, will take place. When the interrupt is serviced, the UART Interrupt flag, URF, will be automatically cleared. The EMI bit will also be automatically cleared to disable other interrupts. However, the USR register flags will only be cleared when certain actions are taken by the UART, the details of which are given in the UART section.

Programming Considerations

By disabling the relevant interrupt enable bits, a requested interrupt can be prevented from being serviced, however, once an interrupt request flag is set, it will remain in this condition in the interrupt register until the corresponding interrupt is serviced or until the request flag is cleared by the application program.

Where a certain interrupt is contained within a Multi-function interrupt, then when the interrupt service routine is executed, as only the Multi-function interrupt request flags, MFnF, will be automatically cleared, the individual request flag for the function needs to be cleared by the application program.

It is recommended that programs do not use the “CALL” instruction within the interrupt service subroutine. Interrupts often occur in an unpredictable manner or need to be serviced immediately. If only one stack is left and the interrupt is not well controlled, the original control sequence will be damaged once a CALL subroutine is executed in the interrupt subroutine.

Every interrupt has the capability of waking up the microcontroller when it is in the SLEEP or IDLE Mode, the wake up being generated when the interrupt request flag changes from low to high. If it is required to prevent a certain interrupt from waking up the microcontroller then its respective request flag should be first set high before enter SLEEP or IDLE Mode.

As only the Program Counter is pushed onto the stack, then when the interrupt is serviced, if the contents of the accumulator, status register or other registers are altered by the interrupt service program, their contents should be saved to the memory at the beginning of the interrupt service routine.

To return from an interrupt subroutine, either a RET or RETI instruction may be executed. The RETI instruction in addition to executing a return to the main program also automatically sets the EMI bit high to allow further interrupts. The RET instruction however only executes a return to the main program leaving the EMI bit in its present zero state and therefore disabling the execution of further interrupts.

Application Descriptions

Introduction

According to the battery current condition, the charger can use a Buck circuit to implement charger management. The battery charging contains constant voltage Mode and Constant current Mode. The HT45F5Q-5 device is specifically designed for battery charger applications. The above-mentioned function control can be implemented by the integrated battery charger management, these are described below.

Functional Description

Operating Principle

The device contains a battery charge module which consists of three operational amplifier (OPA0~OPA2) functions, two 14-bit D/A converter (DAC0 and DAC1) functions. The open drain OPA0~OPA1 and DAC0~DAC1 are used for constant current and constant voltage signal control. The OPA output can directly drive the photo-coupler, which makes the PWM IC on the primary side can implement output power adjustment, shown in the figure below. The internal 20/40 times amplifier OPA2 is used to amplify the charge current signal, thus increasing the current resolution and reducing the detecting resistance power consumption. The constant voltage mode, constant current mode and constant current and constant voltage resolution increasing method are described as follows.

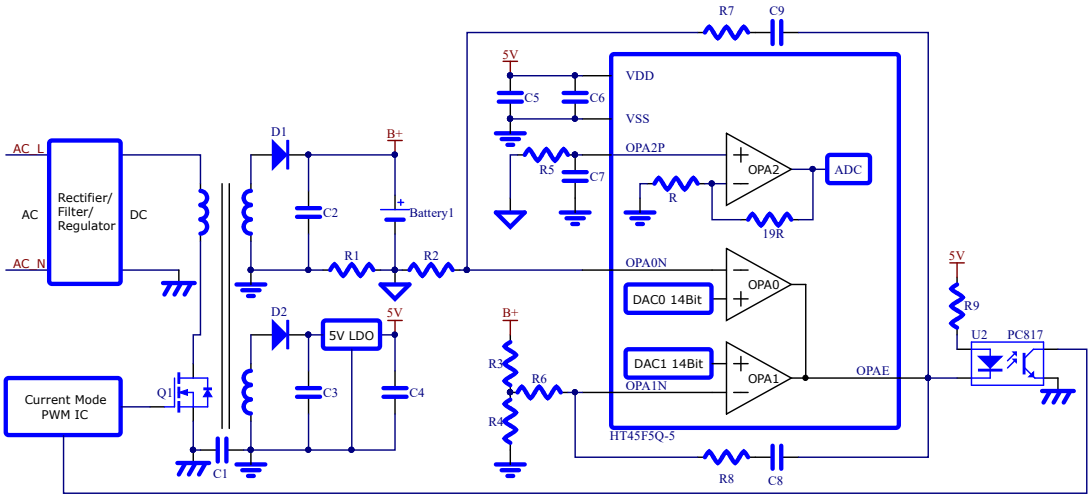

Battery Charge Module

Constant Current Mode Description

Constant current charging means that the charge current will remain at a constant value no matter how the battery internal resistance changes. The principle is that the charge current flows through the detecting resistor R1 and in turn generates a voltage, which will be input to the OPA0 negative terminal through the OPA0N pin. The difference between the OPA0N voltage and the D/A converter voltage is amplified and then output on the OPAE pin. This output will be sent to the PWM IC via a photo-coupler. If the OPA0N voltage is lower than the DAC0 voltage, the PWM IC will increase the PWM duty cycle and vice versa.

Note: The DA0H and DA0L registers are used to set the maximum current threshold.

Constant Voltage Mode Description

Constant voltage charging means that the charge voltage will remain at a constant value no matter how the battery internal resistance changes. The principle is that the charge voltage B+ is divided by R3 and R4 resistors and then supplied to the OPA1 negative terminal through the OPA1N pin. The difference between the OPA1N voltage and the D/A converter voltage is amplified and then output on the OPAE pin. This output will be sent to the PWM IC via a photo-coupler. If the OPA1N voltage is lower than the DAC1 voltage, the PWM IC will increase the PWM duty cycle and vice versa.

Note: The DA1H and DA1L registers are used to set the maximum voltage threshold.

Improving the Constant Current and Constant Voltage Resolution

If the internal 14-bit D/A Converter resolution is not high enough, the OPA0 and OPA1 positive terminals can be supplied by an external divider resistor to increase the voltage and current resolution.

Hardware Circuit

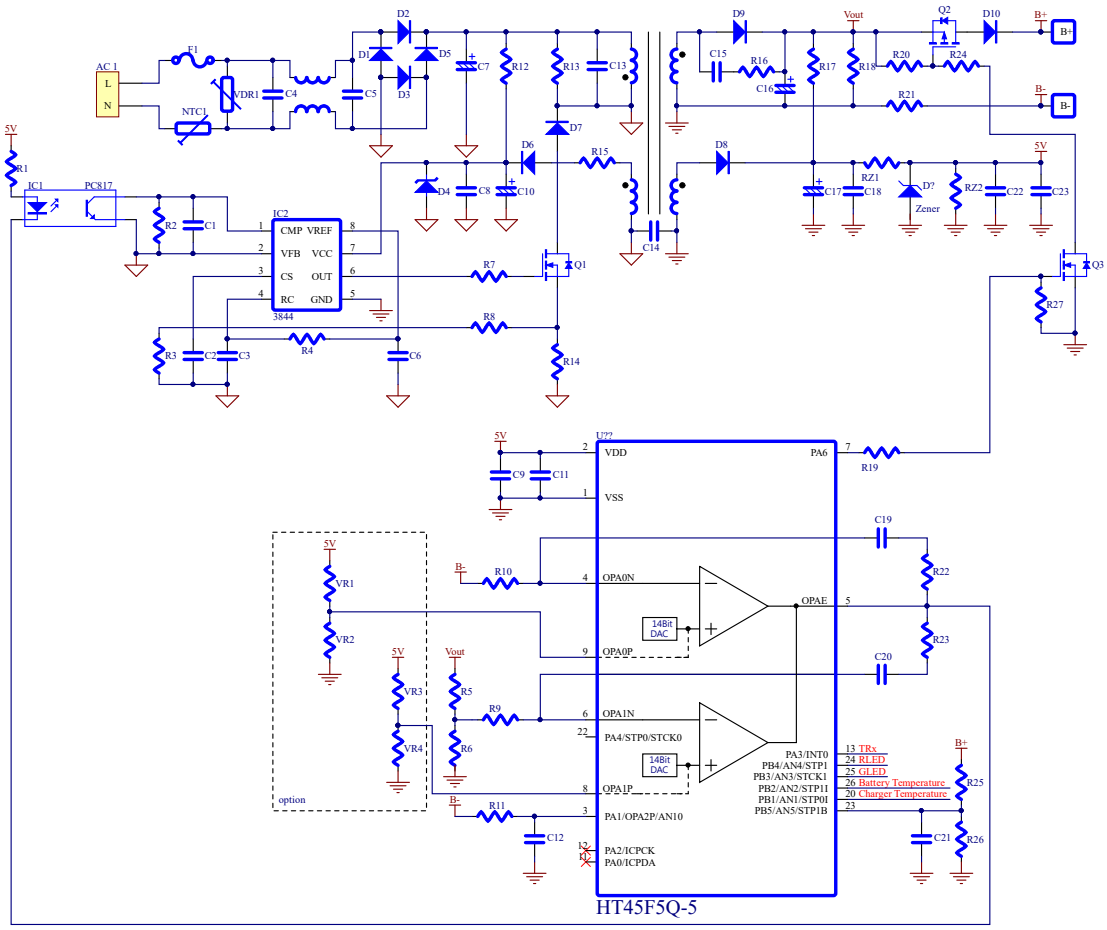

Charger Application Circuit

Instruction Set

Introduction

Central to the successful operation of any microcontroller is its instruction set, which is a set of program instruction codes that directs the microcontroller to perform certain operations. In the case of Holtek microcontroller, a comprehensive and flexible set of over 60 instructions is provided to enable programmers to implement their application with the minimum of programming overheads.

For easier understanding of the various instruction codes, they have been subdivided into several functional groupings.

Instruction Timing

Most instructions are implemented within one instruction cycle. The exceptions to this are branch, call, or table read instructions where two instruction cycles are required. One instruction cycle is equal to 4 system clock cycles, therefore in the case of an 8MHz system oscillator, most instructions would be implemented within 0.5μs and branch or call instructions would be implemented within 1μs. Although instructions which require one more cycle to implement are generally limited to the JMP, CALL, RET, RETI and table read instructions, it is important to realize that any other instructions which involve manipulation of the Program Counter Low register or PCL will also take one more cycle to implement. As instructions which change the contents of the PCL will imply a direct jump to that new address, one more cycle will be required. Examples of such instructions would be “CLR PCL” or “MOV PCL, A”. For the case of skip instructions, it must be noted that if the result of the comparison involves a skip operation then this will also take one more cycle, if no skip is involved then only one cycle is required.

Moving and Transferring Data

The transfer of data within the microcontroller program is one of the most frequently used operations. Making use of several kinds of MOV instructions, data can be transferred from registers to the Accumulator and vice-versa as well as being able to move specific immediate data directly into the Accumulator. One of the most important data transfer applications is to receive data from the input ports and transfer data to the output ports.

Arithmetic Operations

The ability to perform certain arithmetic operations and data manipulation is a necessary feature of most microcontroller applications. Within the Holtek microcontroller instruction set are a range of add and subtract instruction mnemonics to enable the necessary arithmetic to be carried out. Care must be taken to ensure correct handling of carry and borrow data when results exceed 255 for addition and less than 0 for subtraction. The increment and decrement instructions such as INC, INCA, DEC and DECA provide a simple means of increasing or decreasing by a value of one of the values in the destination specified.

Logical and Rotate Operation

The standard logical operations such as AND, OR, XOR and CPL all have their own instruction within the Holtek microcontroller instruction set. As with the case of most instructions involving data manipulation, data must pass through the Accumulator which may involve additional programming steps. In all logical data operations, the zero flag may be set if the result of the operation is zero. Another form of logical data manipulation comes from the rotate instructions such as RR, RL, RRC and RLC which provide a simple means of rotating one bit right or left. Different rotate instructions exist depending on program requirements. Rotate instructions are useful for serial port programming applications where data can be rotated from an internal register into the Carry bit from where it can be examined and the necessary serial bit set high or low. Another application which rotate data operations are used is to implement multiplication and division calculations.

Branches and Control Transfer

Program branching takes the form of either jumps to specified locations using the JMP instruction or to a subroutine using the CALL instruction. They differ in the sense that in the case of a subroutine call, the program must return to the instruction immediately when the subroutine has been carried out. This is done by placing a return instruction “RET” in the subroutine which will cause the program to jump back to the address right after the CALL instruction. In the case of a JMP instruction, the program simply jumps to the desired location. There is no requirement to jump back to the original jumping off point as in the case of the CALL instruction. One special and extremely useful set of branch instructions are the conditional branches. Here a decision is first made regarding the condition of a certain data memory or individual bits. Depending upon the conditions, the program will continue with the next instruction or skip over it and jump to the following instruction. These instructions are the key to decision making and branching within the program perhaps determined by the condition of certain input switches or by the condition of internal data bits.

Bit Operations

The ability to provide single bit operations on Data Memory is an extremely flexible feature of all Holtek microcontrollers. This feature is especially useful for output port bit programming where individual bits or port pins can be directly set high or low using either the “SET [m].i” or “CLR [m].i” instructions respectively. The feature removes the need for programmers to first read the 8-bit output port, manipulate the input data to ensure that other bits are not changed and then output the port with the correct new data. This read-modify-write process is taken care of automatically when these bit operation instructions are used.

Table Read Operations

Data storage is normally implemented by using registers. However, when working with large amounts of fixed data, the volume involved often makes it inconvenient to store the fixed data in the Data Memory. To overcome this problem, Holtek microcontrollers allow an area of Program Memory to be setup as a table where data can be directly stored. A set of easy to use instructions provides the means by which this fixed data can be referenced and retrieved from the Program Memory.

Other Operations

In addition to the above functional instructions, a range of other instructions also exist such as the “HALT” instruction for Power-down operations and instructions to control the operation of the Watchdog Timer for reliable program operations under extreme electric or electromagnetic environments. For their relevant operations, refer to the functional related sections.

Instruction Set Summary

The instructions related to the data memory access in the following table can be used when the desired data memory is located in Data Memory sector 0.

Table Conventions

x: Bits immediate data
m: Data Memory address
A: Accumulator
i: 0~7 number of bits
addr: Program memory address

Mnemonic	Description	Cycles	Flag Affected
Arithmetic			
ADD A,[m]	Add Data Memory to ACC	1	Z, C, AC, OV, SC
ADDM A,[m]	Add ACC to Data Memory	1[Note]	Z, C, AC, OV, SC
ADD A,x	Add immediate data to ACC	1	Z, C, AC, OV, SC
ADC A,[m]	Add Data Memory to ACC with Carry	1	Z, C, AC, OV, SC
ADCM A,[m]	Add ACC to Data memory with Carry	1[Note]	Z, C, AC, OV, SC
SUB A,x	Subtract immediate data from the ACC	1	Z, C, AC, OV, SC, CZ
SUB A,[m]	Subtract Data Memory from ACC	1	Z, C, AC, OV, SC, CZ
SUBM A,[m]	Subtract Data Memory from ACC with result in Data Memory	1[Note]	Z, C, AC, OV, SC, CZ
SBC A,x	Subtract immediate data from ACC with Carry	1	Z, C, AC, OV, SC, CZ
SBC A,[m]	Subtract Data Memory from ACC with Carry	1	Z, C, AC, OV, SC, CZ
SBCM A,[m]	Subtract Data Memory from ACC with Carry, result in Data Memory	1[Note]	Z, C, AC, OV, SC, CZ
DAA [m]	Decimal adjust ACC for Addition with result in Data Memory	1[Note]	C
Logic Operation			
AND A,[m]	Logical AND Data Memory to ACC	1	Z
OR A,[m]	Logical OR Data Memory to ACC	1	Z
XOR A,[m]	Logical XOR Data Memory to ACC	1	Z
ANDM A,[m]	Logical AND ACC to Data Memory	1[Note]	Z
ORM A,[m]	Logical OR ACC to Data Memory	1[Note]	Z
XORM A,[m]	Logical XOR ACC to Data Memory	1[Note]	Z
AND A,x	Logical AND immediate Data to ACC	1	Z
OR A,x	Logical OR immediate Data to ACC	1	Z
XOR A,x	Logical XOR immediate Data to ACC	1	Z
CPL [m]	Complement Data Memory	1[Note]	Z
CPLA [m]	Complement Data Memory with result in ACC	1	Z
Increment & Decrement			
INCA [m]	Increment Data Memory with result in ACC	1	Z
INC [m]	Increment Data Memory	1[Note]	Z
DECA [m]	Decrement Data Memory with result in ACC	1	Z
DEC [m]	Decrement Data Memory	1[Note]	Z
Rotate			
RRA [m]	Rotate Data Memory right with result in ACC	1	None
RR [m]	Rotate Data Memory right	1[Note]	None
RRCA [m]	Rotate Data Memory right through Carry with result in ACC	1	C
RRC [m]	Rotate Data Memory right through Carry	1[Note]	C
RLA [m]	Rotate Data Memory left with result in ACC	1	None
RL [m]	Rotate Data Memory left	1[Note]	None
RLCA [m]	Rotate Data Memory left through Carry with result in ACC	1	C
RLC [m]	Rotate Data Memory left through Carry	1[Note]	C

Mnemonic	Description	Cycles	Flag Affected
Data Move			
MOV A,[m]	Move Data Memory to ACC	1	None
MOV [m],A	Move ACC to Data Memory	1[Note]	None
MOV A,x	Move immediate data to ACC	1	None
Bit Operation			
CLR [m].i	Clear bit of Data Memory	1[Note]	None
SET [m].i	Set bit of Data Memory	1[Note]	None
Branch Operation			
JMP addr	Jump unconditionally	2	None
SZ [m]	Skip if Data Memory is zero	1[Note]	None
SZA [m]	Skip if Data Memory is zero with data movement to ACC	1[Note]	None
SZ [m].i	Skip if bit i of Data Memory is zero	1[Note]	None
SNZ [m]	Skip if Data Memory is not zero	1[Note]	None
SNZ [m].i	Skip if bit i of Data Memory is not zero	1[Note]	None
SIZ [m]	Skip if increment Data Memory is zero	1[Note]	None
SDZ [m]	Skip if decrement Data Memory is zero	1[Note]	None
SIZA [m]	Skip if increment Data Memory is zero with result in ACC	1[Note]	None
SDZA [m]	Skip if decrement Data Memory is zero with result in ACC	1[Note]	None
CALL addr	Subroutine call	2	None
RET	Return from subroutine	2	None
RET A,x	Return from subroutine and load immediate data to ACC	2	None
RETI	Return from interrupt	2	None
Table Read Operation			
TABRD [m]	Read table (specific page) to TBLH and Data Memory	2[Note]	None
TABRDL [m]	Read table (last page) to TBLH and Data Memory	2[Note]	None
ITABRD [m]	Increment table pointer TBLP first and Read table (specific page) to TBLH and Data Memory	2[Note]	None
ITABRDL [m]	Increment table pointer TBLP first and Read table (last page) to TBLH and Data Memory	2[Note]	None
Miscellaneous			
NOP	No operation	1	None
CLR [m]	Clear Data Memory	1[Note]	None
SET [m]	Set Data Memory	1[Note]	None
CLR WDT	Clear Watchdog Timer	1	TO, PDF
SWAP [m]	Swap nibbles of Data Memory	1[Note]	None
SWAPA [m]	Swap nibbles of Data Memory with result in ACC	1	None
HALT	Enter power down mode	1	TO, PDF

Note: 1. For skip instructions, if the result of the comparison involves a skip then two cycles are required, if no skip takes place only one cycle is required.
2. Any instruction which changes the contents of the PCL will also require 2 cycles for execution.

Extended Instruction Set

The extended instructions are used to support the full range address access for the data memory. When the accessed data memory is located in any data memory sector except sector 0, the extended instruction can be used to directly access the data memory instead of using the indirect addressing access. This can not only reduce the use of Flash memory space but also improve the CPU execution efficiency.

Mnemonic	Description	Cycles	Flag Affected
Arithmetic			
LADD A,[m]	Add Data Memory to ACC	2	Z, C, AC, OV, SC
LADDM A,[m]	Add ACC to Data Memory	2Note	Z, C, AC, OV, SC
LADC A,[m]	Add Data Memory to ACC with Carry	2	Z, C, AC, OV, SC
LADCM A,[m]	Add ACC to Data memory with Carry	2Note	Z, C, AC, OV, SC
LSUB A,[m]	Subtract Data Memory from ACC	2	Z, C, AC, OV, SC, CZ
LSUBM A,[m]	Subtract Data Memory from ACC with result in Data Memory	2Note	Z, C, AC, OV, SC, CZ
LSBC A,[m]	Subtract Data Memory from ACC with Carry	2	Z, C, AC, OV, SC, CZ
LSBCM A,[m]	Subtract Data Memory from ACC with Carry, result in Data Memory	2Note	Z, C, AC, OV, SC, CZ
LDAA [m]	Decimal adjust ACC for Addition with result in Data Memory	2Note	C
Logic Operation			
LAND A,[m]	Logical AND Data Memory to ACC	2	Z
LOR A,[m]	Logical OR Data Memory to ACC	2	Z
LXOR A,[m]	Logical XOR Data Memory to ACC	2	Z
LANDM A,[m]	Logical AND ACC to Data Memory	2Note	Z
LORM A,[m]	Logical OR ACC to Data Memory	2Note	Z
LXORM A,[m]	Logical XOR ACC to Data Memory	2Note	Z
LCPL [m]	Complement Data Memory	2Note	Z
LCPLA [m]	Complement Data Memory with result in ACC	2	Z
Increment & Decrement			
LINCA [m]	Increment Data Memory with result in ACC	2	Z
LINC [m]	Increment Data Memory	2Note	Z
LDECA [m]	Decrement Data Memory with result in ACC	2	Z
LDEC [m]	Decrement Data Memory	2Note	Z
Rotate			
LRRA [m]	Rotate Data Memory right with result in ACC	2	None
LRR [m]	Rotate Data Memory right	2Note	None
LRRCA [m]	Rotate Data Memory right through Carry with result in ACC	2	C
LRRC [m]	Rotate Data Memory right through Carry	2Note	C
LRLA [m]	Rotate Data Memory left with result in ACC	2	None
LRL [m]	Rotate Data Memory left	2Note	None
LRLCA [m]	Rotate Data Memory left through Carry with result in ACC	2	C
LRLC [m]	Rotate Data Memory left through Carry	2Note	C
Data Move			
LMOV A,[m]	Move Data Memory to ACC	2	None
LMOV [m],A	Move ACC to Data Memory	2Note	None
Bit Operation			
LCLR [m].i	Clear bit of Data Memory	2Note	None
LSET [m].i	Set bit of Data Memory	2Note	None

Mnemonic	Description	Cycles	Flag Affected
Branch			
LSZ [m]	Skip if Data Memory is zero	2[Note]	None
LSZA [m]	Skip if Data Memory is zero with data movement to ACC	2[Note]	None
LSNZ [m]	Skip if Data Memory is not zero	2[Note]	None
LSZ [m].i	Skip if bit i of Data Memory is zero	2[Note]	None
LSNZ [m].i	Skip if bit i of Data Memory is not zero	2[Note]	None
LSIZ [m]	Skip if increment Data Memory is zero	2[Note]	None
LSDZ [m]	Skip if decrement Data Memory is zero	2[Note]	None
LSIZA [m]	Skip if increment Data Memory is zero with result in ACC	2[Note]	None
LSDZA [m]	Skip if decrement Data Memory is zero with result in ACC	2[Note]	None
Table Read			
LTABRD [m]	Read table (specific page) to TBLH and Data Memory	3[Note]	None
LTABRDL [m]	Read table (last page) to TBLH and Data Memory	3[Note]	None
LITABRD [m]	Increment table pointer TBLP first and Read table (specific page) to TBLH and Data Memory	3[Note]	None
LITABRDL [m]	Increment table pointer TBLP first and Read table (last page) to TBLH and Data Memory	3[Note]	None
Miscellaneous			
LCLR [m]	Clear Data Memory	2[Note]	None
LSET [m]	Set Data Memory	2[Note]	None
LSWAP [m]	Swap nibbles of Data Memory	2[Note]	None
LSWAPA [m]	Swap nibbles of Data Memory with result in ACC	2	None

Note: 1. For these extended skip instructions, if the result of the comparison involves a skip then three cycles are required, if no skip takes place two cycles is required.

2. Any extended instruction which changes the contents of the PCL register will also require three cycles for execution.

Instruction Definition

ADC A,[m] Add Data Memory to ACC with Carry

Description: The contents of the specified Data Memory, Accumulator and the carry flag are added. The result is stored in the Accumulator.

Operation: ACC ← ACC + [m] + C

Affected flag(s): OV, Z, AC, C, SC

ADCM A,[m] Add ACC to Data Memory with Carry

Description: The contents of the specified Data Memory, Accumulator and the carry flag are added. The result is stored in the specified Data Memory.

Operation: [m] ← ACC + [m] + C

Affected flag(s): OV, Z, AC, C, SC

ADD A,[m] Add Data Memory to ACC

Description: The contents of the specified Data Memory and the Accumulator are added. The result is stored in the Accumulator.

Operation: ACC ← ACC + [m]

Affected flag(s): OV, Z, AC, C, SC

ADD A,x Add immediate data to ACC

Description: The contents of the Accumulator and the specified immediate data are added. The result is stored in the Accumulator.

Operation: ACC ← ACC + x

Affected flag(s): OV, Z, AC, C, SC

ADDM A,[m] Add ACC to Data Memory

Description: The contents of the specified Data Memory and the Accumulator are added. The result is stored in the specified Data Memory.

Operation: [m] ← ACC + [m]

Affected flag(s): OV, Z, AC, C, SC

AND A,[m] Logical AND Data Memory to ACC

Description: Data in the Accumulator and the specified Data Memory perform a bitwise logical AND operation. The result is stored in the Accumulator.

Operation: ACC ← ACC ″AND″ [m]

Affected flag(s): Z

AND A,x Logical AND immediate data to ACC

Description: Data in the Accumulator and the specified immediate data perform a bit wise logical AND operation. The result is stored in the Accumulator.

Operation: ACC ← ACC ″AND″ x

Affected flag(s): Z

ANDM A,[m] Logical AND ACC to Data Memory

Description: Data in the specified Data Memory and the Accumulator perform a bitwise logical AND operation. The result is stored in the Data Memory.

Operation: [m] ← ACC ″AND″ [m]

Affected flag(s): Z

CALL addr Subroutine call

Description: Unconditionally calls a subroutine at the specified address. The Program Counter then increments by 1 to obtain the address of the next instruction which is then pushed onto the stack. The specified address is then loaded and the program continues execution from this new address. As this instruction requires an additional operation, it is a two cycle instruction.

Operation: Stack ← Program Counter + 1
Program Counter ← addr

Affected flag(s): None

CLR [m] Clear Data Memory

Description: Each bit of the specified Data Memory is cleared to 0.

Operation: [m] ← 00H

Affected flag(s): None

CLR [m].i Clear bit of Data Memory

Description: Bit i of the specified Data Memory is cleared to 0.

Operation: [m].i ← 0

Affected flag(s): None

CLR WDT Clear Watchdog Timer

Description: The TO, PDF flags and the WDT are all cleared.

Operation: WDT cleared
TO ← 0
PDF ← 0

Affected flag(s): TO, PDF

CPL [m] Complement Data Memory

Description: Each bit of the specified Data Memory is logically complemented (1′s complement). Bits which previously contained a 1 are changed to 0 and vice versa.

Operation: [m] ← $\overline{[m]}$

Affected flag(s): Z

CPLA [m] Complement Data Memory with result in ACC

Description: Each bit of the specified Data Memory is logically complemented (1′s complement). Bits which previously contained a 1 are changed to 0 and vice versa. The complemented result is stored in the Accumulator and the contents of the Data Memory remain unchanged.

Operation: ACC ← $\overline{[m]}$

Affected flag(s): Z

DAA [m] Decimal-Adjust ACC for addition with result in Data Memory

Description: Convert the contents of the Accumulator value to a BCD (Binary Coded Decimal) value resulting from the previous addition of two BCD variables. If the low nibble is greater than 9 or if AC flag is set, then a value of 6 will be added to the low nibble. Otherwise the low nibble remains unchanged. If the high nibble is greater than 9 or if the C flag is set, then a value of 6 will be added to the high nibble. Essentially, the decimal conversion is performed by adding 00H, 06H, 60H or 66H depending on the Accumulator and flag conditions. Only the C flag may be affected by this instruction which indicates that if the original BCD sum is greater than 100, it allows multiple precision decimal addition.

Operation: [m] ← ACC + 00H or
[m] ← ACC + 06H or
[m] ← ACC + 60H or
[m] ← ACC + 66H

Affected flag(s): C

DEC [m]	Decrement Data Memory
Description	Data in the specified Data Memory is decremented by 1.
Operation	[m] ← [m] − 1
Affected flag(s)	Z

DECA [m]	Decrement Data Memory with result in ACC
Description	Data in the specified Data Memory is decremented by 1. The result is stored in the Accumulator. The contents of the Data Memory remain unchanged.
Operation	ACC ← [m] − 1
Affected flag(s)	Z

HALT	Enter power down mode
Description	This instruction stops the program execution and turns off the system clock. The contents of the Data Memory and registers are retained. The WDT and prescaler are cleared. The power down flag PDF is set and the WDT time-out flag TO is cleared.
Operation	TO ← 0 PDF ← 1
Affected flag(s)	TO, PDF

INC [m]	Increment Data Memory
Description	Data in the specified Data Memory is incremented by 1.
Operation	[m] ← [m] + 1
Affected flag(s)	Z

INCA [m]	Increment Data Memory with result in ACC
Description	Data in the specified Data Memory is incremented by 1. The result is stored in the Accumulator. The contents of the Data Memory remain unchanged.
Operation	ACC ← [m] + 1
Affected flag(s)	Z

JMP addr	Jump unconditionally
Description	The contents of the Program Counter are replaced with the specified address. Program execution then continues from this new address. As this requires the insertion of a dummy instruction while the new address is loaded, it is a two cycle instruction.
Operation	Program Counter ← addr
Affected flag(s)	None

MOV A,[m]	Move Data Memory to ACC
Description	The contents of the specified Data Memory are copied to the Accumulator.
Operation	ACC ← [m]
Affected flag(s)	None

MOV A,x	Move immediate data to ACC
Description	The immediate data specified is loaded into the Accumulator.
Operation	ACC ← x
Affected flag(s)	None

MOV [m],A	Move ACC to Data Memory
Description	The contents of the Accumulator are copied to the specified Data Memory.
Operation	[m] ← ACC
Affected flag(s)	None

NOP	No operation
Description	No operation is performed. Execution continues with the next instruction.
Operation	No operation
Affected flag(s)	None

OR A,[m]	Logical OR Data Memory to ACC
Description	Data in the Accumulator and the specified Data Memory perform a bitwise logical OR operation. The result is stored in the Accumulator.
Operation	ACC ← ACC ″OR″ [m]
Affected flag(s)	Z

OR A,x	Logical OR immediate data to ACC
Description	Data in the Accumulator and the specified immediate data perform a bitwise logical OR operation. The result is stored in the Accumulator.
Operation	ACC ← ACC ″OR″ x
Affected flag(s)	Z

ORM A,[m]	Logical OR ACC to Data Memory
Description	Data in the specified Data Memory and the Accumulator perform a bitwise logical OR operation. The result is stored in the Data Memory.
Operation	[m] ← ACC ″OR″ [m]
Affected flag(s)	Z

RET	Return from subroutine
Description	The Program Counter is restored from the stack. Program execution continues at the restored address.
Operation	Program Counter ← Stack
Affected flag(s)	None

RET A,x	Return from subroutine and load immediate data to ACC
Description	The Program Counter is restored from the stack and the Accumulator loaded with the specified immediate data. Program execution continues at the restored address.
Operation	Program Counter ← Stack ACC ← x
Affected flag(s)	None

RETI	Return from interrupt
Description	The Program Counter is restored from the stack and the interrupts are re-enabled by setting the EMI bit. EMI is the master interrupt global enable bit. If an interrupt was pending when the RETI instruction is executed, the pending Interrupt routine will be processed before returning to the main program.
Operation	Program Counter ← Stack EMI ← 1
Affected flag(s)	None

RL [m]	Rotate Data Memory left
Description	The contents of the specified Data Memory are rotated left by 1 bit with bit 7 rotated into bit 0.
Operation	[m].(i+1) ← [m].i; (i=0~6) [m].0 ← [m].7
Affected flag(s)	None

RLA [m] Rotate Data Memory left with result in ACC

Description: The contents of the specified Data Memory are rotated left by 1 bit with bit 7 rotated into bit 0. The rotated result is stored in the Accumulator and the contents of the Data Memory remain unchanged.

Operation:
ACC.(i+1) ← [m].i; (i=0~6)
ACC.0 ← [m].7

Affected flag(s): None

RLC [m] Rotate Data Memory left through Carry

Description: The contents of the specified Data Memory and the carry flag are rotated left by 1 bit. Bit 7 replaces the Carry bit and the original carry flag is rotated into bit 0.

Operation:
[m].(i+1) ← [m].i; (i=0~6)
[m].0 ← C
C ← [m].7

Affected flag(s): C

RLCA [m] Rotate Data Memory left through Carry with result in ACC

Description: Data in the specified Data Memory and the carry flag are rotated left by 1 bit. Bit 7 replaces the Carry bit and the original carry flag is rotated into the bit 0. The rotated result is stored in the Accumulator and the contents of the Data Memory remain unchanged.

Operation:
ACC.(i+1) ← [m].i; (i=0~6)
ACC.0 ← C
C ← [m].7

Affected flag(s): C

RR [m] Rotate Data Memory right

Description: The contents of the specified Data Memory are rotated right by 1 bit with bit 0 rotated into bit 7.

Operation:
[m].i ← [m].(i+1); (i=0~6)
[m].7 ← [m].0

Affected flag(s): None

RRA [m] Rotate Data Memory right with result in ACC

Description: Data in the specified Data Memory is rotated right by 1 bit with bit 0 rotated into bit 7. The rotated result is stored in the Accumulator and the contents of the Data Memory remain unchanged.

Operation:
ACC.i ← [m].(i+1); (i=0~6)
ACC.7 ← [m].0

Affected flag(s): None

RRC [m] Rotate Data Memory right through Carry

Description: The contents of the specified Data Memory and the carry flag are rotated right by 1 bit. Bit 0 replaces the Carry bit and the original carry flag is rotated into bit 7.

Operation:
[m].i ← [m].(i+1); (i=0~6)
[m].7 ← C
C ← [m].0

Affected flag(s): C

RRCA [m] Rotate Data Memory right through Carry with result in ACC

Description: Data in the specified Data Memory and the carry flag are rotated right by 1 bit. Bit 0 replaces the Carry bit and the original carry flag is rotated into bit 7. The rotated result is stored in the Accumulator and the contents of the Data Memory remain unchanged.

Operation:
ACC.i ← [m].(i+1); (i=0~6)
ACC.7 ← C
C ← [m].0

Affected flag(s): C

SBC A,[m] Subtract Data Memory from ACC with Carry

Description: The contents of the specified Data Memory and the complement of the carry flag are subtracted from the Accumulator. The result is stored in the Accumulator. Note that if the result of subtraction is negative, the C flag will be cleared to 0, otherwise if the result is positive or zero, the C flag will be set to 1.

Operation: ACC ← ACC − [m] − $\overline{C}$

Affected flag(s): OV, Z, AC, C, SC, CZ

SBC A, x Subtract immediate data from ACC with Carry

Description: The immediate data and the complement of the carry flag are subtracted from the Accumulator. The result is stored in the Accumulator. Note that if the result of subtraction is negative, the C flag will be cleared to 0, otherwise if the result is positive or zero, the C flag will be set to 1.

Operation: ACC ← ACC – [m] – $\overline{C}$

Affected flag(s): OV, Z, AC, C, SC, CZ

SBCM A,[m] Subtract Data Memory from ACC with Carry and result in Data Memory

Description: The contents of the specified Data Memory and the complement of the carry flag are subtracted from the Accumulator. The result is stored in the Data Memory. Note that if the result of subtraction is negative, the C flag will be cleared to 0, otherwise if the result is positive or zero, the C flag will be set to 1.

Operation: [m] ← ACC − [m] − $\overline{C}$

Affected flag(s): OV, Z, AC, C, SC, CZ

SDZ [m] Skip if decrement Data Memory is 0

Description: The contents of the specified Data Memory are first decremented by 1. If the result is 0 the following instruction is skipped. As this requires the insertion of a dummy instruction while the next instruction is fetched, it is a two cycle instruction. If the result is not 0 the program proceeds with the following instruction.

Operation:
[m] ← [m] − 1
Skip if [m]=0

Affected flag(s): None

SDZA [m] Skip if decrement Data Memory is zero with result in ACC

Description: The contents of the specified Data Memory are first decremented by 1. If the result is 0, the following instruction is skipped. The result is stored in the Accumulator but the specified Data Memory contents remain unchanged. As this requires the insertion of a dummy instruction while the next instruction is fetched, it is a two cycle instruction. If the result is not 0, the program proceeds with the following instruction.

Operation:
ACC ← [m] − 1
Skip if ACC=0

Affected flag(s): None

SET [m]	Set Data Memory
Description	Each bit of the specified Data Memory is set to 1.
Operation	[m] ← FFH
Affected flag(s)	None

SET [m].i	Set bit of Data Memory
Description	Bit i of the specified Data Memory is set to 1.
Operation	[m].i ← 1
Affected flag(s)	None

SIZ [m]	Skip if increment Data Memory is 0
Description	The contents of the specified Data Memory are first incremented by 1. If the result is 0, the following instruction is skipped. As this requires the insertion of a dummy instruction while the next instruction is fetched, it is a two cycle instruction. If the result is not 0 the program proceeds with the following instruction.
Operation	[m] ← [m] + 1 Skip if [m]=0
Affected flag(s)	None

SIZA [m]	Skip if increment Data Memory is zero with result in ACC
Description	The contents of the specified Data Memory are first incremented by 1. If the result is 0, the following instruction is skipped. The result is stored in the Accumulator but the specified Data Memory contents remain unchanged. As this requires the insertion of a dummy instruction while the next instruction is fetched, it is a two cycle instruction. If the result is not 0 the program proceeds with the following instruction.
Operation	ACC ← [m] + 1 Skip if ACC=0
Affected flag(s)	None

SNZ [m].i	Skip if bit i of Data Memory is not 0
Description	If bit i of the specified Data Memory is not 0, the following instruction is skipped. As this requires the insertion of a dummy instruction while the next instruction is fetched, it is a two cycle instruction. If the result is 0 the program proceeds with the following instruction.
Operation	Skip if [m].i ≠ 0
Affected flag(s)	None

SNZ [m]	Skip if Data Memory is not 0
Description	The contents of the specified Data Memory are read out and then written back to the specified Data Memory again. If the specified Data Memory is not 0, the following instruction is skipped. As this requires the insertion of a dummy instruction while the next instruction is fetched, it is a two cycle instruction. If the result is 0 the program proceeds with the following instruction.
Operation	Skip if [m]≠ 0
Affected flag(s)	None

SUB A,[m]	Subtract Data Memory from ACC
Description	The specified Data Memory is subtracted from the contents of the Accumulator. The result is stored in the Accumulator. Note that if the result of subtraction is negative, the C flag will be cleared to 0, otherwise if the result is positive or zero, the C flag will be set to 1.
Operation	ACC ← ACC − [m]
Affected flag(s)	OV, Z, AC, C, SC, CZ

SUBM A,[m] Subtract Data Memory from ACC with result in Data Memory

Description: The specified Data Memory is subtracted from the contents of the Accumulator. The result is stored in the Data Memory. Note that if the result of subtraction is negative, the C flag will be cleared to 0, otherwise if the result is positive or zero, the C flag will be set to 1.

Operation: [m] ← ACC − [m]

Affected flag(s): OV, Z, AC, C, SC, CZ

SUB A,x Subtract immediate data from ACC

Description: The immediate data specified by the code is subtracted from the contents of the Accumulator. The result is stored in the Accumulator. Note that if the result of subtraction is negative, the C flag will be cleared to 0, otherwise if the result is positive or zero, the C flag will be set to 1.

Operation: ACC ← ACC − x

Affected flag(s): OV, Z, AC, C, SC, CZ

SWAP [m] Swap nibbles of Data Memory

Description: The low-order and high-order nibbles of the specified Data Memory are interchanged.

Operation: [m].3~[m].0 ↔ [m].7~[m].4

Affected flag(s): None

SWAPA [m] Swap nibbles of Data Memory with result in ACC

Description: The low-order and high-order nibbles of the specified Data Memory are interchanged. The result is stored in the Accumulator. The contents of the Data Memory remain unchanged.

Operation: ACC.3~ACC.0 ← [m].7~[m].4
ACC.7~ACC.4 ← [m].3~[m].0

Affected flag(s): None

SZ [m] Skip if Data Memory is 0

Description: The contents of the specified Data Memory are read out and then written back to the specified Data Memory again. If the contents of the specified Data Memory is 0, the following instruction is skipped. As this requires the insertion of a dummy instruction while the next instruction is fetched, it is a two cycle instruction. If the result is not 0 the program proceeds with the following instruction.

Operation: Skip if [m]=0

Affected flag(s): None

SZA [m] Skip if Data Memory is 0 with data movement to ACC

Description: The contents of the specified Data Memory are copied to the Accumulator. If the value is zero, the following instruction is skipped. As this requires the insertion of a dummy instruction while the next instruction is fetched, it is a two cycle instruction. If the result is not 0 the program proceeds with the following instruction.

Operation: ACC ← [m]
Skip if [m]=0

Affected flag(s): None

SZ [m].i Skip if bit i of Data Memory is 0

Description: If bit i of the specified Data Memory is 0, the following instruction is skipped. As this requires the insertion of a dummy instruction while the next instruction is fetched, it is a two cycle instruction. If the result is not 0, the program proceeds with the following instruction.

Operation: Skip if [m].i=0

Affected flag(s): None

TABRD [m]	Read table (specific page) to TBLH and Data Memory
Description	The low byte of the program code (specific page) addressed by the table pointer (TBLP and TBHP) is moved to the specified Data Memory and the high byte moved to TBLH.
Operation	[m] ← program code (low byte) TBLH ← program code (high byte)
Affected flag(s)	None

TABRDL [m]	Read table (last page) to TBLH and Data Memory
Description	The low byte of the program code (last page) addressed by the table pointer (TBLP) is moved to the specified Data Memory and the high byte moved to TBLH.
Operation	[m] ← program code (low byte) TBLH ← program code (high byte)
Affected flag(s)	None

ITABRD [m]	Increment table pointer low byte first and read table (specific page) to TBLH and Data Memory
Description	Increment table pointer low byte, TBLP, first and then the program code (specific page) addressed by the table pointer (TBHP and TBLP) is moved to the specified Data Memory and the high byte moved to TBLH.
Operation	[m] ← program code (low byte) TBLH ← program code (high byte)
Affected flag(s)	None

ITABRDL [m]	Increment table pointer low byte first and read table (last page) to TBLH and Data Memory
Description	Increment table pointer low byte, TBLP, first and then the low byte of the program code (last page) addressed by the table pointer (TBLP) is moved to the specified Data Memory and the high byte moved to TBLH.
Operation	[m] ← program code (low byte) TBLH ← program code (high byte)
Affected flag(s)	None

XOR A,[m]	Logical XOR Data Memory to ACC
Description	Data in the Accumulator and the specified Data Memory perform a bitwise logical XOR operation. The result is stored in the Accumulator.
Operation	ACC ← ACC ″XOR″ [m]
Affected flag(s)	Z

XORM A,[m]	Logical XOR ACC to Data Memory
Description	Data in the specified Data Memory and the Accumulator perform a bitwise logical XOR operation. The result is stored in the Data Memory.
Operation	[m] ← ACC ″XOR″ [m]
Affected flag(s)	Z

XOR A,x	Logical XOR immediate data to ACC
Description	Data in the Accumulator and the specified immediate data perform a bitwise logical XOR operation. The result is stored in the Accumulator.
Operation	ACC ← ACC ″XOR″ x
Affected flag(s)	Z

Extended Instruction Definition

The extended instructions are used to directly access the data stored in any data memory sections.

LADC A,[m] Add Data Memory to ACC with Carry

Description: The contents of the specified Data Memory, Accumulator and the carry flag are added. The result is stored in the Accumulator.

Operation: ACC ← ACC + [m] + C

Affected flag(s): OV, Z, AC, C, SC

LADCM A,[m] Add ACC to Data Memory with Carry

Description: The contents of the specified Data Memory, Accumulator and the carry flag are added. The result is stored in the specified Data Memory.

Operation: [m] ← ACC + [m] + C

Affected flag(s): OV, Z, AC, C, SC

LADD A,[m] Add Data Memory to ACC

Description: The contents of the specified Data Memory and the Accumulator are added. The result is stored in the Accumulator.

Operation: ACC ← ACC + [m]

Affected flag(s): OV, Z, AC, C, SC

LADDM A,[m] Add ACC to Data Memory

Description: The contents of the specified Data Memory and the Accumulator are added. The result is stored in the specified Data Memory.

Operation: [m] ← ACC + [m]

Affected flag(s): OV, Z, AC, C, SC

LAND A,[m] Logical AND Data Memory to ACC

Description: Data in the Accumulator and the specified Data Memory perform a bitwise logical AND operation. The result is stored in the Accumulator.

Operation: ACC ← ACC ″AND″ [m]

Affected flag(s): Z

LANDM A,[m] Logical AND ACC to Data Memory

Description: Data in the specified Data Memory and the Accumulator perform a bitwise logical AND operation. The result is stored in the Data Memory.

Operation: [m] ← ACC ″AND″ [m]

Affected flag(s): Z

LCLR [m] Clear Data Memory

Description: Each bit of the specified Data Memory is cleared to 0.

Operation: [m] ← 00H

Affected flag(s): None

LCLR [m].i Clear bit of Data Memory

Description: Bit i of the specified Data Memory is cleared to 0.

Operation: [m].i ← 0

Affected flag(s): None

LCPL [m] Complement Data Memory

Description: Each bit of the specified Data Memory is logically complemented (1′s complement). Bits which previously contained a 1 are changed to 0 and vice versa.

Operation: $[m] \leftarrow \overline{[m]}$

Affected flag(s): Z

LCPLA [m] Complement Data Memory with result in ACC

Description: Each bit of the specified Data Memory is logically complemented (1′s complement). Bits which previously contained a 1 are changed to 0 and vice versa. The complemented result is stored in the Accumulator and the contents of the Data Memory remain unchanged.

Operation: $ACC \leftarrow \overline{[m]}$

Affected flag(s): Z

LDAA [m] Decimal-Adjust ACC for addition with result in Data Memory

Description: Convert the contents of the Accumulator value to a BCD (Binary Coded Decimal) value resulting from the previous addition of two BCD variables. If the low nibble is greater than 9 or if AC flag is set, then a value of 6 will be added to the low nibble. Otherwise the low nibble remains unchanged. If the high nibble is greater than 9 or if the C flag is set, then a value of 6 will be added to the high nibble. Essentially, the decimal conversion is performed by adding 00H, 06H, 60H or 66H depending on the Accumulator and flag conditions. Only the C flag may be affected by this instruction which indicates that if the original BCD sum is greater than 100, it allows multiple precision decimal addition.

Operation:
$[m] \leftarrow ACC + 00H$ or
$[m] \leftarrow ACC + 06H$ or
$[m] \leftarrow ACC + 60H$ or
$[m] \leftarrow ACC + 66H$

Affected flag(s): C

LDEC [m] Decrement Data Memory

Description: Data in the specified Data Memory is decremented by 1.

Operation: $[m] \leftarrow [m] - 1$

Affected flag(s): Z

LDECA [m] Decrement Data Memory with result in ACC

Description: Data in the specified Data Memory is decremented by 1. The result is stored in the Accumulator. The contents of the Data Memory remain unchanged.

Operation: $ACC \leftarrow [m] - 1$

Affected flag(s): Z

LINC [m] Increment Data Memory

Description: Data in the specified Data Memory is incremented by 1.

Operation: $[m] \leftarrow [m] + 1$

Affected flag(s): Z

LINCA [m] Increment Data Memory with result in ACC

Description: Data in the specified Data Memory is incremented by 1. The result is stored in the Accumulator. The contents of the Data Memory remain unchanged.

Operation: $ACC \leftarrow [m] + 1$

Affected flag(s): Z

LMOV A,[m] Move Data Memory to ACC

Description: The contents of the specified Data Memory are copied to the Accumulator.

Operation: ACC ← [m]

Affected flag(s): None

LMOV [m],A Move ACC to Data Memory

Description: The contents of the Accumulator are copied to the specified Data Memory.

Operation: [m] ← ACC

Affected flag(s): None

LOR A,[m] Logical OR Data Memory to ACC

Description: Data in the Accumulator and the specified Data Memory perform a bitwise logical OR operation. The result is stored in the Accumulator.

Operation: ACC ← ACC ″OR″ [m]

Affected flag(s): Z

LORM A,[m] Logical OR ACC to Data Memory

Description: Data in the specified Data Memory and the Accumulator perform a bitwise logical OR operation. The result is stored in the Data Memory.

Operation: [m] ← ACC ″OR″ [m]

Affected flag(s): Z

LRL [m] Rotate Data Memory left

Description: The contents of the specified Data Memory are rotated left by 1 bit with bit 7 rotated into bit 0.

Operation: [m].(i+1) ← [m].i; (i=0~6)
[m].0 ← [m].7

Affected flag(s): None

LRLA [m] Rotate Data Memory left with result in ACC

Description: The contents of the specified Data Memory are rotated left by 1 bit with bit 7 rotated into bit 0. The rotated result is stored in the Accumulator and the contents of the Data Memory remain unchanged.

Operation: ACC.(i+1) ← [m].i; (i=0~6)
ACC.0 ← [m].7

Affected flag(s): None

LRLC [m] Rotate Data Memory left through Carry

Description: The contents of the specified Data Memory and the carry flag are rotated left by 1 bit. Bit 7 replaces the Carry bit and the original carry flag is rotated into bit 0.

Operation: [m].(i+1) ← [m].i; (i=0~6)
[m].0 ← C
C ← [m].7

Affected flag(s): C

LRLCA [m] Rotate Data Memory left through Carry with result in ACC

Description: Data in the specified Data Memory and the carry flag are rotated left by 1 bit. Bit 7 replaces the Carry bit and the original carry flag is rotated into the bit 0. The rotated result is stored in the Accumulator and the contents of the Data Memory remain unchanged.

Operation: ACC.(i+1) ← [m].i; (i=0~6)
ACC.0 ← C
C ← [m].7

Affected flag(s): C

LRR [m] Rotate Data Memory right

Description: The contents of the specified Data Memory are rotated right by 1 bit with bit 0 rotated into bit 7.

Operation:
[m].i ← [m].(i+1); (i=0~6)
[m].7 ← [m].0

Affected flag(s): None

LRRA [m] Rotate Data Memory right with result in ACC

Description: Data in the specified Data Memory is rotated right by 1 bit with bit 0 rotated into bit 7. The rotated result is stored in the Accumulator and the contents of the Data Memory remain unchanged.

Operation:
ACC.i ← [m].(i+1); (i=0~6)
ACC.7 ← [m].0

Affected flag(s): None

LRRC [m] Rotate Data Memory right through Carry

Description: The contents of the specified Data Memory and the carry flag are rotated right by 1 bit. Bit 0 replaces the Carry bit and the original carry flag is rotated into bit 7.

Operation:
[m].i ← [m].(i+1); (i=0~6)
[m].7 ← C
C ← [m].0

Affected flag(s): C

LRRCA [m] Rotate Data Memory right through Carry with result in ACC

Description: Data in the specified Data Memory and the carry flag are rotated right by 1 bit. Bit 0 replaces the Carry bit and the original carry flag is rotated into bit 7. The rotated result is stored in the Accumulator and the contents of the Data Memory remain unchanged.

Operation:
ACC.i ← [m].(i+1); (i=0~6)
ACC.7 ← C
C ← [m].0

Affected flag(s): C

LSBC A,[m] Subtract Data Memory from ACC with Carry

Description: The contents of the specified Data Memory and the complement of the carry flag are subtracted from the Accumulator. The result is stored in the Accumulator. Note that if the result of subtraction is negative, the C flag will be cleared to 0, otherwise if the result is positive or zero, the C flag will be set to 1.

Operation: $ACC \leftarrow ACC - [m] - \overline{C}$

Affected flag(s): OV, Z, AC, C, SC, CZ

LSBCM A,[m] Subtract Data Memory from ACC with Carry and result in Data Memory

Description: The contents of the specified Data Memory and the complement of the carry flag are subtracted from the Accumulator. The result is stored in the Data Memory. Note that if the result of subtraction is negative, the C flag will be cleared to 0, otherwise if the result is positive or zero, the C flag will be set to 1.

Operation: $[m] \leftarrow ACC - [m] - \overline{C}$

Affected flag(s): OV, Z, AC, C, SC, CZ

LSDZ [m] Skip if decrement Data Memory is 0

Description: The contents of the specified Data Memory are first decremented by 1. If the result is 0 the following instruction is skipped. As this requires the insertion of a dummy instruction while the next instruction is fetched, it is a three cycle instruction. If the result is not 0 the program proceeds with the following instruction.

Operation: [m] ← [m] − 1
Skip if [m]=0

Affected flag(s): None

LSDZA [m] Skip if decrement Data Memory is zero with result in ACC

Description: The contents of the specified Data Memory are first decremented by 1. If the result is 0, the following instruction is skipped. The result is stored in the Accumulator but the specified Data Memory contents remain unchanged. As this requires the insertion of a dummy instruction while the next instruction is fetched, it is a three cycle instruction. If the result is not 0, the program proceeds with the following instruction.

Operation: ACC ← [m] − 1
Skip if ACC=0

Affected flag(s): None

LSET [m] Set Data Memory

Description: Each bit of the specified Data Memory is set to 1.

Operation: [m] ← FFH

Affected flag(s): None

LSET [m].i Set bit of Data Memory

Description: Bit i of the specified Data Memory is set to 1.

Operation: [m].i ← 1

Affected flag(s): None

LSIZ [m] Skip if increment Data Memory is 0

Description: The contents of the specified Data Memory are first incremented by 1. If the result is 0, the following instruction is skipped. As this requires the insertion of a dummy instruction while the next instruction is fetched, it is a three cycle instruction. If the result is not 0 the program proceeds with the following instruction.

Operation: [m] ← [m] + 1
Skip if [m]=0

Affected flag(s): None

LSIZA [m] Skip if increment Data Memory is zero with result in ACC

Description: The contents of the specified Data Memory are first incremented by 1. If the result is 0, the following instruction is skipped. The result is stored in the Accumulator but the specified Data Memory contents remain unchanged. As this requires the insertion of a dummy instruction while the next instruction is fetched, it is a three cycle instruction. If the result is not 0 the program proceeds with the following instruction.

Operation: ACC ← [m] + 1
Skip if ACC=0

Affected flag(s): None

LSNZ [m].i Skip if bit i of Data Memory is not 0

Description: If bit i of the specified Data Memory is not 0, the following instruction is skipped. As this requires the insertion of a dummy instruction while the next instruction is fetched, it is a three cycle instruction. If the result is 0 the program proceeds with the following instruction.

Operation: Skip if [m].i ≠ 0

Affected flag(s): None

LSNZ [m] Skip if Data Memory is not 0

Description: The contents of the specified Data Memory are read out and then written to the specified Data Memory again. If the content of the specified Data Memory is not 0, the following instruction is skipped. As this requires the insertion of a dummy instruction while the next instruction is fetched, it is a three cycle instruction. If the result is 0 the program proceeds with the following instruction.

Operation: Skip if [m] ≠ 0

Affected flag(s): None

LSUB A,[m] Subtract Data Memory from ACC

Description: The specified Data Memory is subtracted from the contents of the Accumulator. The result is stored in the Accumulator. Note that if the result of subtraction is negative, the C flag will be cleared to 0, otherwise if the result is positive or zero, the C flag will be set to 1.

Operation: ACC ← ACC − [m]

Affected flag(s): OV, Z, AC, C, SC, CZ

LSUBM A,[m] Subtract Data Memory from ACC with result in Data Memory

Description: The specified Data Memory is subtracted from the contents of the Accumulator. The result is stored in the Data Memory. Note that if the result of subtraction is negative, the C flag will be cleared to 0, otherwise if the result is positive or zero, the C flag will be set to 1.

Operation: [m] ← ACC − [m]

Affected flag(s): OV, Z, AC, C, SC, CZ

LSWAP [m] Swap nibbles of Data Memory

Description: The low-order and high-order nibbles of the specified Data Memory are interchanged.

Operation: [m].3~[m].0 ↔ [m].7~[m].4

Affected flag(s): None

LSWAPA [m] Swap nibbles of Data Memory with result in ACC

Description: The low-order and high-order nibbles of the specified Data Memory are interchanged. The result is stored in the Accumulator. The contents of the Data Memory remain unchanged.

Operation: ACC.3~ACC.0 ← [m].7~[m].4
ACC.7~ACC.4 ← [m].3~[m].0

Affected flag(s): None

LSZ [m] Skip if Data Memory is 0

Description: The contents of the specified Data Memory are read out and then written to the specified Data Memory again. If the contents of the specified Data Memory is 0, the following instruction is skipped. As this requires the insertion of a dummy instruction while the next instruction is fetched, it is a three cycle instruction. If the result is not 0 the program proceeds with the following instruction.

Operation: Skip if [m]=0

Affected flag(s): None

LSZA [m] Skip if Data Memory is 0 with data movement to ACC

Description: The contents of the specified Data Memory are copied to the Accumulator. If the value is zero, the following instruction is skipped. As this requires the insertion of a dummy instruction while the next instruction is fetched, it is a three cycle instruction. If the result is not 0 the program proceeds with the following instruction.

Operation: ACC ← [m]
Skip if [m]=0

Affected flag(s): None

LSZ [m].i Skip if bit i of Data Memory is 0

Description: If bit i of the specified Data Memory is 0, the following instruction is skipped. As this requires the insertion of a dummy instruction while the next instruction is fetched, it is a three cycle instruction. If the result is not 0, the program proceeds with the following instruction.

Operation: Skip if [m].i=0

Affected flag(s): None

LTABRD [m] Read table (specific page) to TBLH and Data Memory

Description: The low byte of the program code (specific page) addressed by the table pointer (TBHP and TBLP) is moved to the specified Data Memory and the high byte moved to TBLH.

Operation: [m] ← program code (low byte)
TBLH ← program code (high byte)

Affected flag(s): None

LTABRDL [m] Read table (last page) to TBLH and Data Memory

Description: The low byte of the program code (last page) addressed by the table pointer (TBLP) is moved to the specified Data Memory and the high byte moved to TBLH.

Operation: [m] ← program code (low byte)
TBLH ← program code (high byte)

Affected flag(s): None

LITABRD [m] Increment table pointer low byte first and read table (specific page) to TBLH and Data Memory

Description: Increment table pointer low byte, TBLP, first and then the program code (specific page) addressed by the table pointer (TBHP and TBLP) is moved to the specified Data Memory and the high byte moved to TBLH.

Operation: [m] ← program code (low byte)
TBLH ← program code (high byte)

Affected flag(s): None

LITABRDL [m] Increment table pointer low byte first and read table (last page) to TBLH and Data Memory

Description: Increment table pointer low byte, TBLP, first and then the low byte of the program code (last page) addressed by the table pointer (TBLP) is moved to the specified Data Memory and the high byte moved to TBLH.

Operation: [m] ← program code (low byte)
TBLH ← program code (high byte)

Affected flag(s): None

LXOR A,[m] Logical XOR Data Memory to ACC

Description: Data in the Accumulator and the specified Data Memory perform a bitwise logical XOR operation. The result is stored in the Accumulator.

Operation: ACC ← ACC ″XOR″ [m]

Affected flag(s): Z

LXORM A,[m] Logical XOR ACC to Data Memory

Description: Data in the specified Data Memory and the Accumulator perform a bitwise logical XOR operation. The result is stored in the Data Memory.

Operation: [m] ← ACC ″XOR″ [m]

Affected flag(s): Z

Package Information

Note that the package information provided here is for consultation purposes only. As this information may be updated at regular intervals users are reminded to consult the Holtek website for the latest version of the Package Information.

Additional supplementary information with regard to packaging is listed below. Click on the relevant section to be transferred to the relevant website page.

- Package Information (include Outline Dimensions, Product Tape and Reel Specifications)
- The Operation Instruction of Packing Materials
- Carton information

24-pin SSOP (150mil) Outline Dimensions

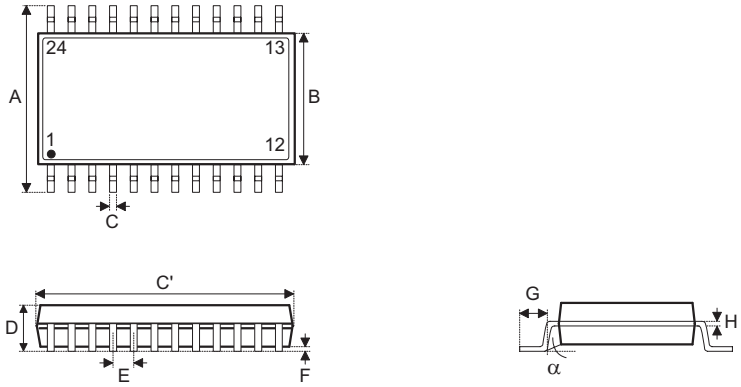

Symbol	Dimensions in inch		
	Min.	Nom.	Max.
A		0.236 BSC	
B		0.154 BSC	
C	0.008	—	0.012
C’		0.341 BSC	
D	—	—	0.069
E		0.025 BSC	
F	0.004	—	0.010
G	0.016	—	0.050
H	0.004	—	0.010
α	0°	—	8°

Symbol	Dimensions in mm		
	Min.	Nom.	Max.
A		6.00 BSC	
B		3.90 BSC	
C	0.20	—	0.30
C’		8.66 BSC	
D	—	—	1.75
E		0.635 BSC	
F	0.10	—	0.25
G	0.41	—	1.27
H	0.10	—	0.25
α	0°	—	8°

28-pin SSOP (150mil) Outline Dimensions

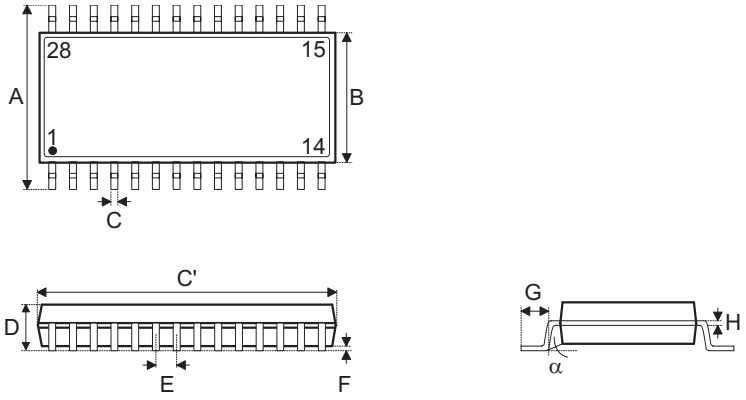

Symbol	Dimensions in inch		
	Min.	Nom.	Max.
A		0.236 BSC	
B		0.154 BSC	
C	0.008	—	0.012
C’		0.390 BSC	
D	—	—	0.069
E		0.025 BSC	
F	0.004	—	0.010
G	0.016	—	0.050
H	0.004	—	0.010
α	0°	—	8°

Symbol	Dimensions in mm		
	Min.	Nom.	Max.
A		6.00 BSC	
B		3.90 BSC	
C	0.20	—	0.30
C’		9.90 BSC	
D	—	—	1.75
E		0.635 BSC	
F	0.10	—	0.25
G	0.41	—	1.27
H	0.10	—	0.25
α	0°	—	8°

SAW Type 32-pin QFN (4mm×4mm×0.75mm) Outline Dimensions

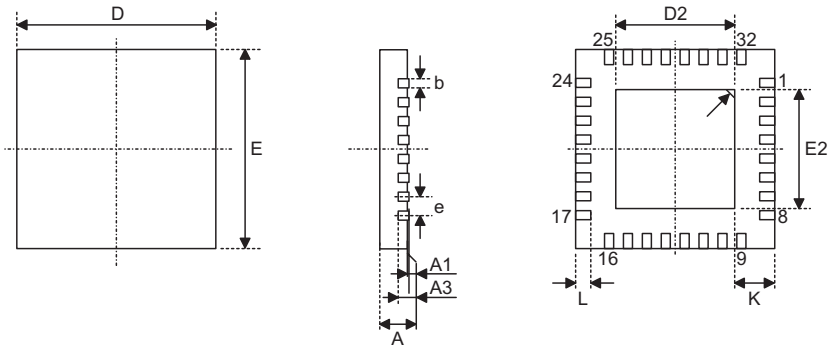

Symbol	Dimensions in inch		
	Min.	Nom.	Max.
A	0.028	0.030	0.031
A1	0.000	0.001	0.002
A3	0.008 REF		
b	0.006	0.008	0.010
D	0.157 BSC		
E	0.157 BSC		
e	0.016 BSC		
D2	0.100	—	0.108
E2	0.100	—	0.108
L	0.014	0.016	0.018
K	0.008	—	—

Symbol	Dimensions in mm		
	Min.	Nom.	Max.
A	0.70	0.75	0.80
A1	0.00	0.02	0.05
A3	0.203 REF		
b	0.15	0.20	0.25
D	4.00 BSC		
E	4.00 BSC		
e	0.40 BSC		
D2	2.55	—	2.75
E2	2.55	—	2.75
L	0.35	0.40	0.45
K	0.20	—	—

Copyright© 2023 by HOLTEK SEMICONDUCTOR INC. All Rights Reserved.

The information provided in this document has been produced with reasonable care and attention before publication, however, HOLTEK does not guarantee that the information is completely accurate. The information contained in this publication is provided for reference only and may be superseded by updates. HOLTEK disclaims any expressed, implied or statutory warranties, including but not limited to suitability for commercialization, satisfactory quality, specifications, characteristics, functions, fitness for a particular purpose, and non-infringement of any third-party's rights. HOLTEK disclaims all liability arising from the information and its application. In addition, HOLTEK does not recommend the use of HOLTEKs' products where there is a risk of personal hazard due to malfunction or other reasons. HOLTEK hereby declares that it does not authorise the use of these products in life-saving, life-sustaining or safety critical components. Any use of HOLTEKs' products in life-saving/sustaining or safety applications is entirely at the buyer's risk, and the buyer agrees to defend, indemnify and hold HOLTEK harmless from any damages, claims, suits, or expenses resulting from such use. The information provided in this document, including but not limited to the content, data, examples, materials, graphs, and trademarks, is the intellectual property of HOLTEK (and its licensors, where applicable) and is protected by copyright law and other intellectual property laws. No license, express or implied, to any intellectual property right, is granted by HOLTEK herein. HOLTEK reserves the right to revise the information described in the document at any time without prior notice. For the latest information, please contact us.