GT 50

Automatic Scrubber/ 自动洗地机

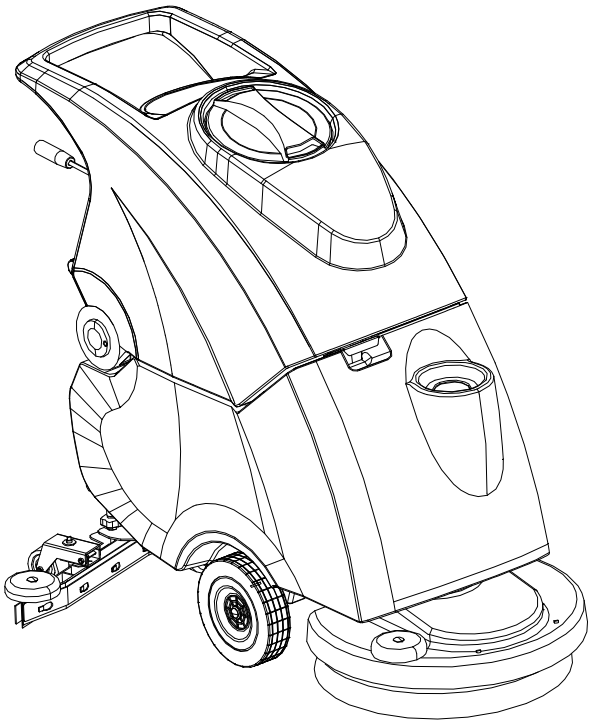

OPERATOR'S MANUAL/操作说明书

Technical Specifications

主要技术参数

		B50	BT50	C50
Cleaned track width 清洗宽度	mm	500	500	500
Squeegee width 吸水扒宽度	mm	815	815	815
Hourly performance 最大工作效率	m^2/h	1950	1950	1950
Number of brushes 刷子数量	n°	1	1	1
Brush diameter 刷盘直径	mm	500	500	500
Max brush pressare 刷盘压力	Kg	25	25	30
Brush rotation speed 刷盘转速	Rpm	155	155	140
Brush motor power 刷盘电机功率	W	550	550	550
Drive control 驱动方式	/	Mechanical 机械式	Mechanical 机械式	Electronic 电动式
Drive motor power 驱动电机功率	W	/	250	/
Maximum speed 最高工作速度	Km/h	4	4	4
Suction motor power 吸水电机功率	W	480	480	800
Noise level 工作噪音	dB(a)	67	67	69
Solution tank 清水箱容量	l	50	50	50

Recovery tank 污水箱功率	l	50	50	50
Wheel diameter 驱动轮直径	mm	200	200	200
Net weight without batteries 净重（不含电瓶）	Kg	72	80	90
Number of batteries 电瓶数量	n°	2	2	/
Series battery voltage 电瓶电压	V	24	24	/
Single battery capacity 单个电瓶最大容量（仅供参考）	Ah (5h) Ah (20h)	110 140	110 140	/ /
Single battery weight 单个电瓶重量（仅供参考）	Kg	30	30	/
Power supply cable length 电源线长度	mm	/	/	500
Power supply voltage 工作电压	V	24 DC	24 DC	220/240 AC
Power supply frequency 交流电频率	Hz	/	/	50
Battery compartment size (length, width, height) 电瓶箱尺寸(长,宽,高)	mm	380x 360x 300	380x 360x 300	/
Machine size (length, width, height) 机器尺寸(长,宽,高)	mm X/Y/Z	1216x 502x 975	1216x 502x 975	1216x 502x 975
Dimensions of packing (length, width, height) 包装尺寸(长,宽,高)	mm	1268x 680x 1170x	1268x 680x 1170x	1268x 680x 1170x

Data can be changed without notice.

以上数据制造厂商有更改的权利，无需事前通知

Machine Dimensions
机器尺寸

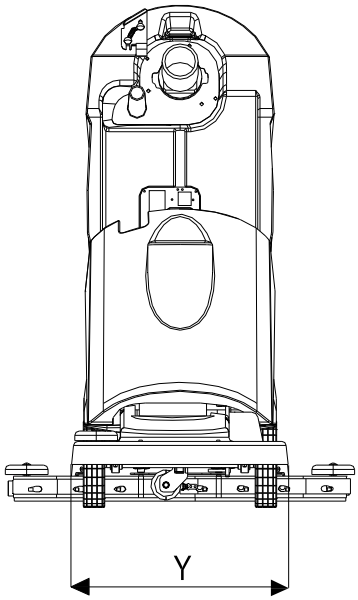

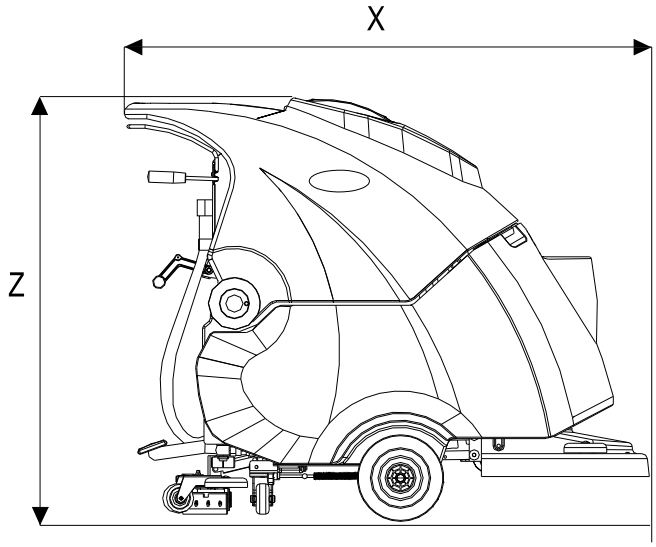

X-Y-Z: See table “TECHNICAL SPECIFICATIONS”
X-Y-Z: 请参阅表格“主要技术参数

Gadlee®

GADLEE GREEN CLEANING EQUIPMENT (HK) CO.LTD

Date:MM/DD/YY

Model: GT50 B50

Ser.N: XXXXXXX
Vcc: XX V
Power: XXXXX W
A: XX A
Weight: XX KG

IP: IPXX

FIG. **1**

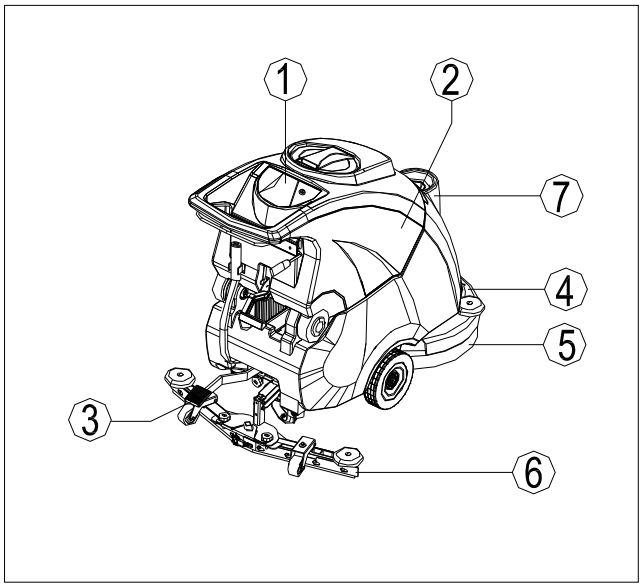

FIG. **2**

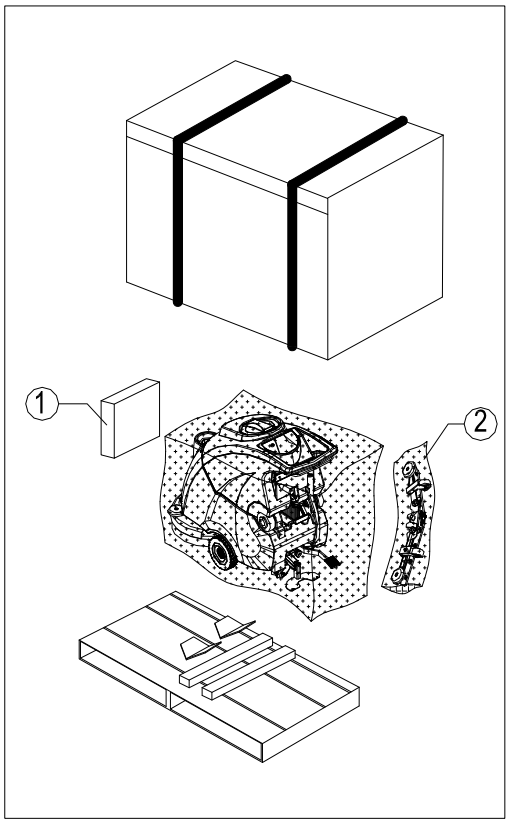

FIG. **3**

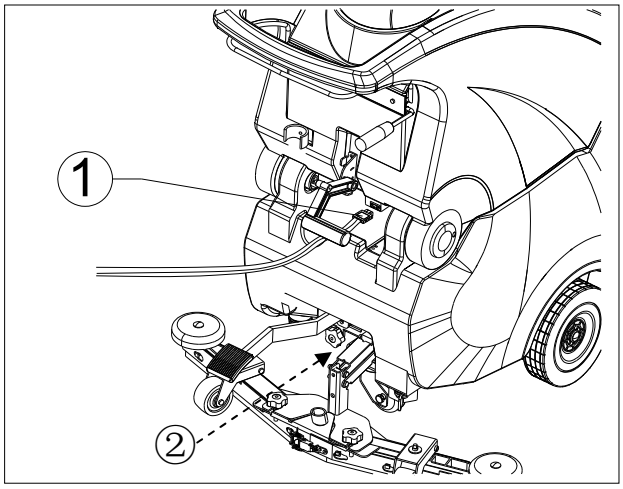

FIG. **4**

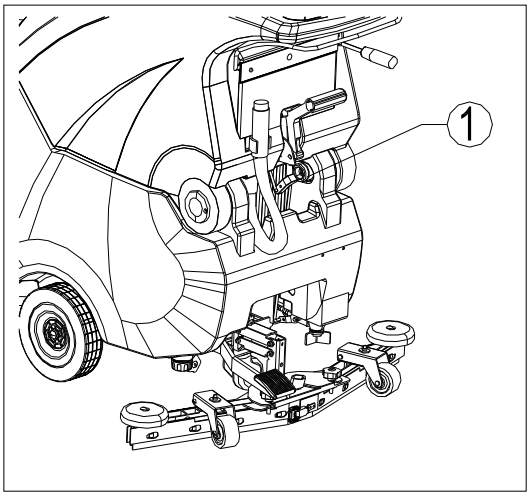

FIG. **5**

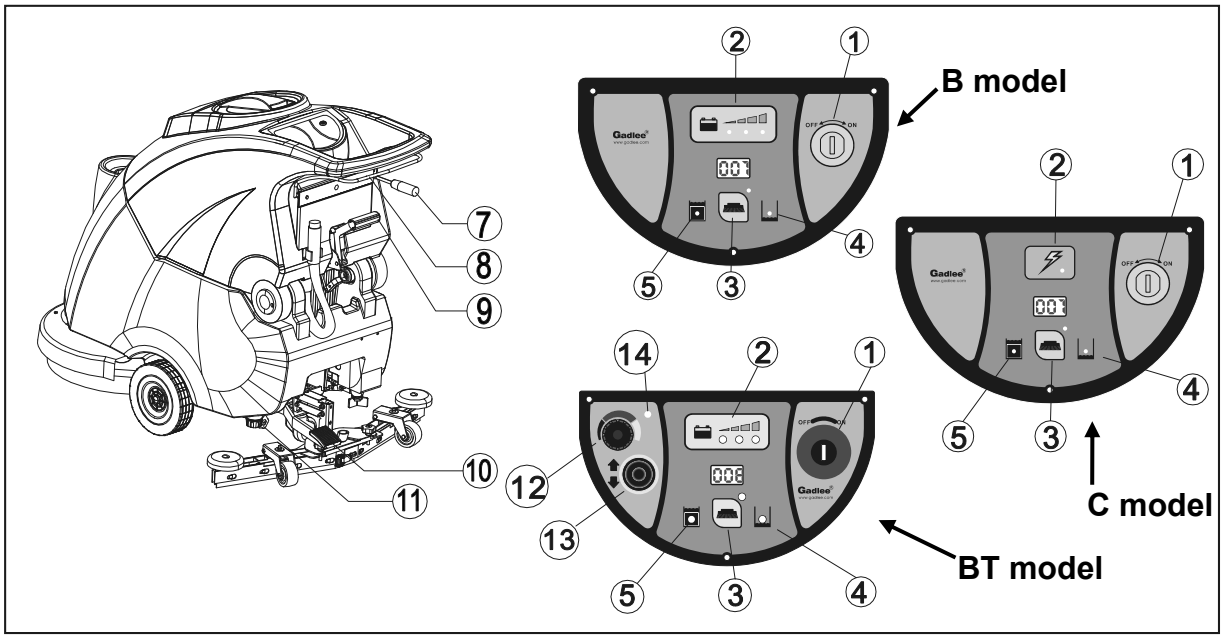

FIG. **6**

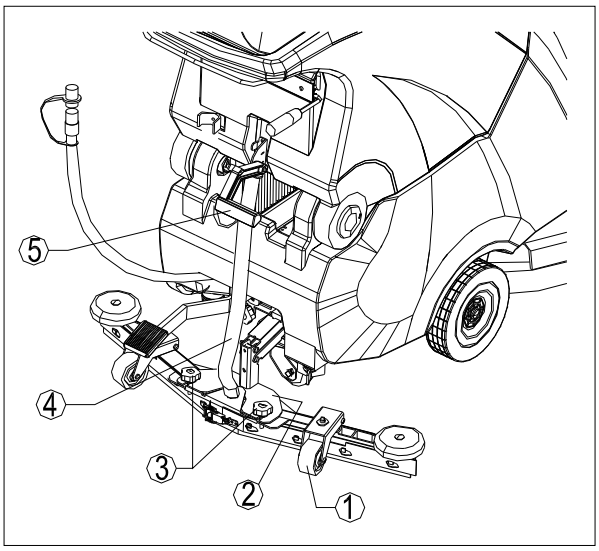

FIG. **7**

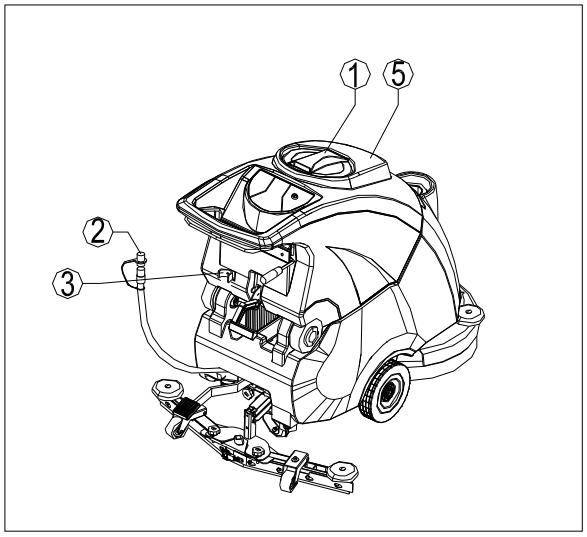

FIG. **8**

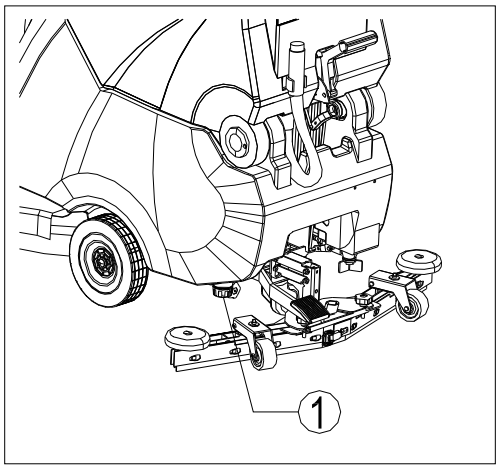

FIG. **9**

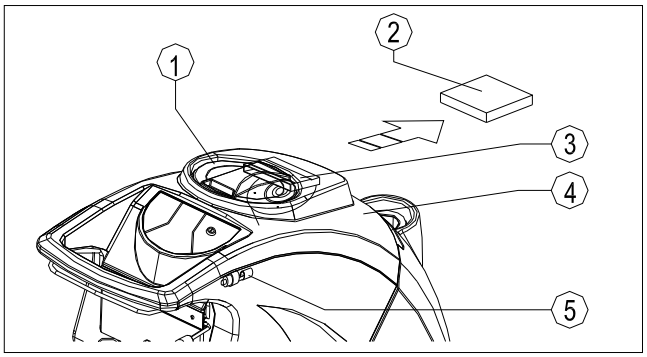

FIG. **10**

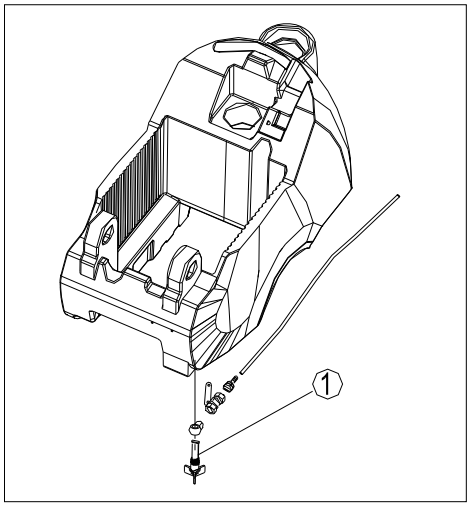

FIG. **11**

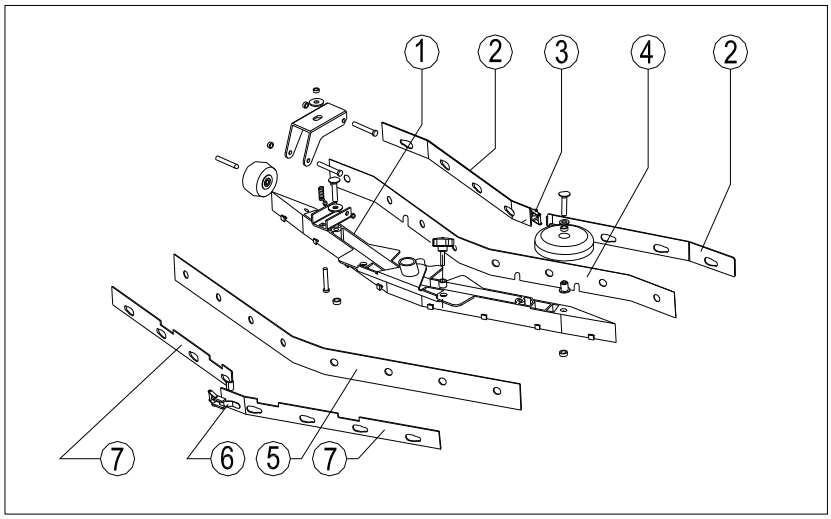

FIG. **12**

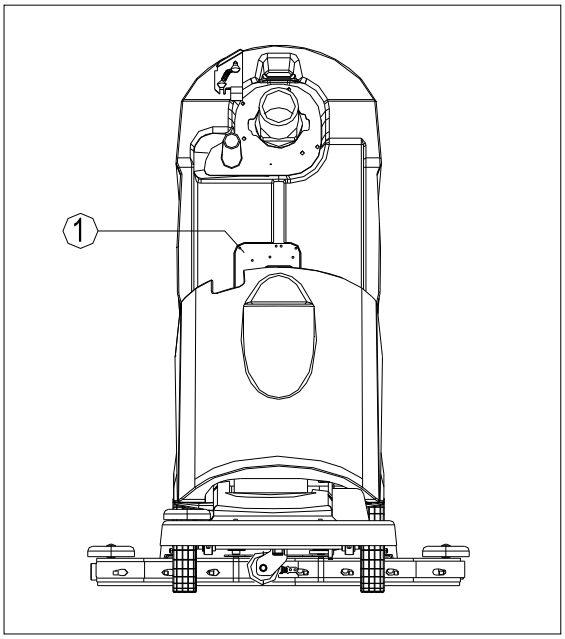

FIG. **13**

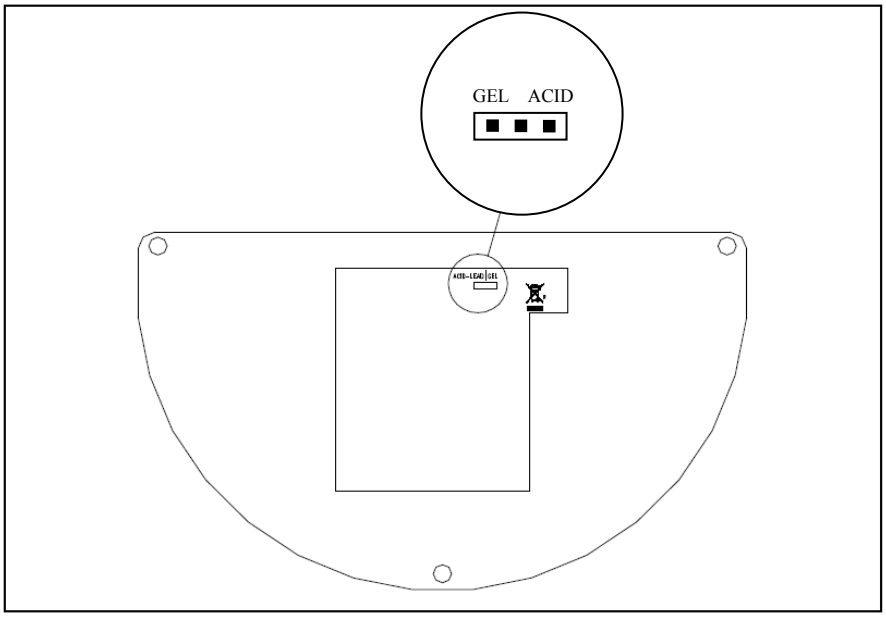

FIG. **14**

ENGLISH

1. TABLE OF CONTENTS

1. TABLE OF CONTENTS 2

2. GENERAL INFORMATION 4

2.1 SCOPE OF THE MANUAL 4
2.2 IDENTIFICATION OF THE MACHINE 5
2.3 DOCUMENTATION ANNEXED TO THE MACHINE 5

3. TECHNICAL INFORMATION 5

3.1 GENERAL DESCRIPTION 5
3.2 LEGEND 5
3.3 DANGER AREAS 5
3.4 ACCESSORIES 6

4. INFORMATION ON SAFETY 6

4.1 SAFETY STANDARDS 6

5. HANDLING AND INSTALLATION 6

5.1 LIFTING AND CARRYING THE PACKED MACHINE 8
5.2 CHECKING THE MACHINE ON DELIVERY 8
5.3 UNPACKING 9
5.4 ELECTRIC CONNECTIONS AND GROUNDING (MODELS WITH CABLE) 9
5.5 FEEDING BATTERIES 10
5.5.1 Batteries: preparation 10
5.5.2 Batteries: installation and connection 10
5.5.3 Batteries: removal 11
5.6 THE BATTERY-CHARGER 11
5.6.1 Choosing the battery-charger 11
5.6.2 Preparing the battery-charger 11
5.7 LIFTING AND HANDLING THE MACHINE 12

6. PRACTICAL GUIDE FOR THE USER 12

6.1 CONTROL DEVICES - DESCRIPTION 12
6.2 INSTALLING AND ADJUSTING THE SQUEEGEE 13
6.3 MOVEMENT OF THE MACHINE WHEN NOT OPERATING 13
6.4 INSTALLING AND REPLACING THE BRUSHES / DRIVE DISCS / ROLLERS 13
6.5 DETERGENTS - USE 14
6.6 SETTING UP THE MACHINE 14
6.7 WORK 15
6.8 SOME USEFUL SUGGESTIONS FOR THE OPTIMAL USE OF THE MACHINE 16
6.8.1 Pre-washing 16
6.8.2 Drying 16
6.9 DRAINING OFF DIRTY WATER 17
6.10 DRAINING OFF CLEAN WATER 17

7. PERIODS OF INACTIVITY 18

8. MAINTENANCE AND BATTERY RECHARGING 18

8.1 RECHARGING PROCEDURES 18

9. INSTRUCTIONS FOR MAINTENANCE 18

9.1 MAINTENANCE – GENERAL RULES 19
9.2 ROUTINE MAINTENANCE 19
9.2.1 Suction air filter and floating rod: cleaning 19
9.2.2 Basket filter: cleaning 19
9.2.3 Detergent solution filter: cleaning 19
9.2.4 Squeegee blades: replacement 19
9.2.5 Fuses: replacement 20
9.3 PERIODIC MAINTENANCE 20
9.3.1 Daily maintenance 20
9.3.2 Weekly maintenance 20

9.3.3 Six-monthly maintenance 20

10. TROUBLESHOOTING 21

10.1 HOW TO OVERCOME POSSIBLE FAILURES 21
10.2 MOTOR DRIVE ALARM BOARD 25

2. GENERAL INFORMATION

Read this manual carefully before starting any operations on this machine[1].

2.1 Scope of the manual

This manual has been drawn up by the Manufacturer and is considered as an integral part of the machine.

It defines the purpose for which the machine has been manufactured and contains all information the operators[2] require.

Besides this manual, which contains the necessary information for the users, other publications have been issued, which contain the specific information for the technicians in charge of maintenance[3].

The constant observance of the instructions guarantee the safety of man and machine, low running costs, quality results and a longer work life of the machine itself. The non-observance of the prescribed rules could injure men, damage the machine, spoil the washed floor and even the environment.

To find the single topics in a fast way, see the descriptive table of contents at the beginning of this manual.

The paragraphs that are not to be neglected are printed in bold letters and preceded by symbols illustrated and defined below.

! DANGER

Indicates that attention must be paid to avoid serious consequences that could cause the death of the personnel or possible damages to health.

☝ WARNING

Indicates that attention must be paid to avoid serious consequences that could damage the machine, spoil the environment where the machine is used or cause economic losses.

i INFORMATION

Particularly important instructions.

In following a policy of constant development and update of the product, the Manufacturer could implement modifications without any previous notice.

Even though the machine you own is greatly different from the one(s) illustrated in this manual, safety and information thereof are guaranteed anyway.

---

[1] The definition "machine" substitutes the commercial name to which this manual refers.

[2] People authorised to use the machine without carrying out maintenance operations that require precise technical knowledge.

[3] People having the experience, technical preparation and knowledge of the regulations and laws necessary to carry out the activity and capable to recognize and avoid possible dangers when handling, installing, using the machine and carrying out maintenance operations.

2.2 Identification of the machine

The number plate (fig. 1), which is attached at the rear of the machine, shows the following information:

- Model code;
- Machine model;
- Power supply voltage;
- Total rated power;
- Serial number (registration number);
- Year of manufacture;
- Dry weight;
- Maximum full load weight;
- Steepest slope that can be overcome;
- Manufacturer's identification.

2.3 Documentation annexed to the machine

- User's manual;
- Warranty certificate;
- Ce certificate of conformity.

3. TECHNICAL INFORMATION

3.1 General description

The machine is a sweeping scrubber, which can be used in civil and industrial environments for sweeping, washing and drying flat, horizontal, smooth or moderately rough floors, with even surfaces and free from obstacles. It is available either in the version with battery or with cable to meet with any requirements of autonomy and weight. The scrubber distributes on the floor an adequately dosed solution of water and detergent, and brushes it to remove dirt. Choosing with care the right cleaning detergent and brushes (or abrasive discs or rollers) in the wide range of accessories available, the machine can adapt itself to all kinds of combinations of floors and dirt.
With the liquid suction system incorporated in the machine, the floor can also be dried after washing. Drying is performed by means of the underpressure in the recovery tank generated by the suction motor. The floor cleaner, connected to the tank, collects the dirty water.

3.2 Legend

The main components of the machine are the following (fig. 2):

- The detergent solution tank (fig. 2, ref. 7): used to contain and carry the mixture of clean water and detergent;
- The recovery tank (fig. 2, ref. 2): used to collect dirty water sucked up from the floor during washing;
- Control panel (fig. 2, ref. 1);
- Head unit (fig. 2, ref. 4): the main element is represented by the brushes/rollers (fig. 2, ref. 5), which distribute the detergent solution on the floor, removing dirt;
- Squeegee unit (or floor wiper, fig. 2, ref. 6): used to wipe and dry the floor, sucking up the water spread on the floor;
- Head lift pedal (fig. 2, ref. 3): allows you to raise the brush head during transport.

3.3 Danger areas

A -**Tank unit**: in presence of certain detergents, danger of irritation for the eyes, skin, mucous diaphragms, respiratory apparatus and asphyxia. Danger caused by dirt recovered from the environment (germs and chemical subtances). Danger of crushing

between the recovery tank and solution tank, when the recovery tank is replaced on the solution tank.

B -**Control panel**: danger of shortcircuits.

C -**Bottom of washing head**: danger caused by the brush/roller rotation.

D -**Rear wheels**: danger of crushing between wheels and chassis.

E -**Battery compartment** (located within the solution tank): danger of short circuits between the battery poles and presence of hydrogen during battery charging.

3.4 Accessories

- **Bristle brushes**: used for washing delicate floors and for polishing;
- **Polipropilene brushes**: used for normal floor washing;
- **Tynex brushes**: used to remove accumulated stubborn dirt on resistant floors;
- **Cleaning pad**: allow the use of the following discs:
  - White pad: used for washing and polishing marble and similar surfaces;
  - Red pad: used for washing of resistant floors;
  - Black pad: used for thorough washing of resistant floors with stubborn dirt.

4. INFORMATION ON SAFETY

4.1 Safety standards

Read the User's manual carefully before proceeding with start-up, use, maintenance, routine maintenance or any other operations on the machine.

WARNING

Stick to all the instructions contained in this Manual (especially those regarding danger and warning) and observe the safety plates attached on the machine. The Manufacturer declines all responsibility for injures to persons or damage to things deriving from the non-observance of these instructions.

The machine must be used by trained personnel only, who have shown their skill and have been expressly authorized to use it.

Persons under eighteen cannot use the machine.

This machine must not be used for any other purpose than that for which it has been expressly manufactured. Assess the type of building in which it will be used (e.g. pharmaceutical and chemical companies, hospitals, etc.) and scrupulously respect the regulations and conditions in force.

Do not use the machine in places that are not adequately lighted, in environments with danger of explosions, on public roads, in the presence of dirt harmful to health or improper environments.

The suitable temperature for the use of the machine ranges between +4°C and +35°C; when the machine is not used, the temperature range is between +0°C e +50°C.

The humidity range for the machine under any conditions varies between 30% and 95%.

Never use or suck up inflammable or explosive liquids (e.g. petrol, fuel oil, etc.), inflammable gases, dry dust, acids and solvents (e.g. solvents for paints, acetone, etc.) even if diluted. Never suck up any burning or white-hot objects.

Do not use the machine on slopes or ramps higher than 2%; in the event of light slopes do not use it transversally, handle it with extreme care and do not reverse. When driving along ramps or heavier slopes take great care to avoid overturning or uncontrolled

acceleration. Overcome ramps and/or steps exclusively with the brush head and squeegee lifted.

Never park the machine on slopes.

The machine must never be left unmanned with the motors running; before abandoning the machine, switch the motors off, ensure that it cannot move accidentally, engage the parking brake and remove the key from the ignition.

When using the machine mind the presence of people particularly children in the environment where you are working.

Do not use the machine to carry persons/things or to tow things. Do not drag the machine.

Never lay things on the machine for any reason.

Do not obstruct the air vents and heat dispersion openings.

Do not remove, modify or elude the safety devices.

Various and unpleasant experiences have shown that people wear or carry various objects capable of causing serious accidents: before starting to work, remove trinkets, watches, neckties or other such things.

Always use individual safety protections: apron or protective suit/overalls, non-slip water-proof shoes, rubber gloves, protective goggles and caps, face mask to protect the respiratory system.

Do not put the hands in between moving organs.

Do not use detergents different from those provided for, and stick to the instructions indicated on the respective safety sheets. Keep detergents in a safe place, inaccessible to children, and in case they come in contact with the eyes, wash them immediately with plenty of water or, if swallowed, call for a doctor immediately.

Make sure that the plugs for the power supply of the models with cable or of the battery-chargers are properly grounded and protected by magnetothermal switches and differentials.

Make sure that the electric characteristics of the machine (voltage, frequency, absorbed power) indicated on the identification plate are compliant with those of the power distribution plant. The machine with cable is equipped with three lead wires and a three-contact ground plug for the use of a proper grounding plug. The yellow and green wire of the cable is the earth wire: never connect this wire to other wires that are not the plug ground tap.

It is fundamental to observe the battery Manufacturer's instructions and stick to the Legislator's provisions. Keep batteries always dry and clean to avoid surface leakage currents. Keep batteries safe from impurities, for instance metal dust.

Do not lay tools on batteries: danger of short circuits and explosions.

Mind the use of battery acid: stick to the relative safety instructions.

When using the machine model with cable mind that you do not crush or tear the power supply cable. Check this cable periodically to control if it is damaged; if this is so, the machine cannot be used.

In presence of particularly high magnetic fields assess the possible effects on the control electronics.

Never wash the machine with jets of water.

The recycled fluids contain detergents, disinfectants, water, organic and inorganic stuff recycled during the work stages: they must be disposed of in compliance with the laws in force.

In case of breakdown and/or bad operation of the machine, switch it off immediately (unplugging it from the mains) and do not tamper with it. Contact a technical assistance centre of the Manufacturer's.

All maintenance operations must be performed in adequately lighted environments and only after having disconnected the machine from the power supply (in models with cable by unplugging the machine from the socket, while in models with battery by detaching the battery connector).

Have any electrical work and all maintenance and repair operations (particularly those not

explicitely described in this manual) carried out a specialised and trained technical staff only.

In case of replacement of the power supply cable, plug or terminals, perform the repair by properly fixing the electric connections and the cable blocking strap that is located in the control panel, to guarantee the resistance of the cable. Then reassemble the panel with care to ensure the protection of the machine user.

Only the use of original accessories and spare parts supplied by the Manufacturer is permitted, as only these offer the certainty that the machine will operate safely and without any inconveniences. Do not use parts removed from other machines or other kits as spares.

This machine has been designed and constructed to provide ten years' service from the fabrication date shown on the rating plate. After this time, whether the machine has been used or not, it should be disposed of according to current legislation in the country in which it is used:

- The machine must be disconnected from the power supply, emptied of liquids and cleaned;
- The product is classified as WEEE type special waste and is covered by the requisites of the new environmental protection regulations (2002/96/EC WEEE). It must be disposed of separately from ordinary waste in compliance with current legislation and standards.

Special waste. Do not dispose of with ordinary waste.

Alternatively the machine must be returned to the Manufacturer for a complete overhaul.

If you decide to stop using the machine, you are recommended to remove the batteries and dispose of them at an authorised collection centre.

You should also make sure that all parts of the appliance which could represent a hazard, particularly to children, are made safe.

5. HANDLING AND INSTALLATION

5.1 Lifting and carrying the packed machine

☝ WARNING

In all lifting operations make sure that the packed machine has been tightly anchored to the pallet, in order to avoid any overturning or accidental falls. Loading and/or unloading from the motor vehicles must be performed in an adequately lighted environment.

The machine, which is packed on a wooden pallet by the Manufacturer, must be loaded by means of proper handling machines (see EC Directive 2006/42 and subsequent amendments and/or additions), onto the carrier and, once it has arrived at the appointed destination, unloaded by similar means.

The brushes and the squeegees are packed in cardboard boxes without pallet.

The packed machine body must be lifted only with a fork lift truck. Handle with care to avoid bumps or overturnings.

5.2 Checking the machine on delivery

On delivery check with attention that the package and the machine are not damaged. In the event that the machine has suffered any damages, report so to the carrier; before

accepting the goods, reserve by written the right to present a claim for the refund of the damages.

5.3 Unpacking

☝ WARNING

On unpacking the machine, the operator must be provided with the necessary accessories (e.g. gloves, protective goggles etc.) to limit possible hazards of accidents.

Unpack the machine in the following way:

- Cut and remove the plastic straps with scissors or nippers;
- Remove the cardbox;
- Remove the envelopes inside the battery compartment (within the solution tank) and check its contents:
  - Guarantee slip;
  - Use and maintenance manual;
  - 1 x Battery bridges with terminals;(battery model only)
  - 1 x connector for the battery-charger(battery model only)
  - Spare fuses
  - 2 switch keys;

i INFORMATION

Keep one of the 2 keys safe so that it can be located in case the other one is lost; the other key is to be inserted in the lock on the mushroom switch.

- Depending on the model, remove the metal brackets or cut the plastic straps, which fix the machine chassis to the pallet;
- Let the machine slide down the pallet on an inclined plane, by pushing it into reverse;
- Unwrap the brushes/rollers (fig. 3, ref. 1) and the squeegee (fig. 3, ref. 2) from their packing;
- Clean the outside of the machine observing the safety rules;
- After Unpacking The Machine, You Can Install The Batteries (Models With Battery) Or perform the electric connections (models with cable): see respective paragraphs.

If necessary, preserve the wrapping material as it could be used again to protect the machine in the event of a move or if the machine should be sent to a service centre for repair.
Otherwise, the material must be disposed of in compliance with the laws in force.

5.4 Electric connections and grounding (models with cable)

On the identification plate (fig. 1) the electric characteristics of the machine are written: make sure that the frequency and line tension are the same of those of the environment where you are going to work.
As far as voltage is concerned, the models showing a voltage of 230 V on the plate can be used for voltages ranging from 220 to 240 V. The same is true for the models showing a voltage value of 115 V, which can be used for voltages ranging from 110 to 120 V. The frequency indicated on the plate must always correspond to that of the mains.

☝ IMPORTANT

Make sure the mains circuit is suitably earthed and that the sockets (and any adaptors used) ensure the continuity of the earth conductors.

! DANGER

Failure to observe these instructions could cause possibly serious damage to people and things and invalidates the guarantee.

5.5 Feeding batteries

Two different batteries can be fitted on this machine:

- **Tubular leak-proof batteries**: these batteries require the periodical check of the electrolyte level. When it is necessary, top up with distilled water alone until the plates are covered; do not overfill (max. 5 mm. above the plates).
- **Gel batteries**: this kind of batteries requires no maintenance.

The technical specifications must correspond to those indicated in the paragraph concerning the machine technical data: actually, the use of heavier storage batteries can cause serious problems to the machine controllability and overheat the drive motor, whereas storage batteries with a lower capacity require recharges more frequently.
They must be kept charged, dry and clean, with their connections tight.

¡ INFORMATION

Follow the instructions below to set the type of battery installed on the machine's hardware or software.

Battery models: on the back of the control panel, move the bridge (fig. 14) to select the type of battery installed on the machine (ACID-LEAD/GEL)

5.5.1 Batteries: preparation

! DANGER

On installing or performing any kind of maintenance on the batteries wear the necessary accessories (e.g. protective gloves, goggles, overalls, etc.) to limit the hazards of accidents, keep away from possible free flames, do not short-circuit the battery poles, cause sparks or smoke.

The batteries are normally supplied filled with acid and ready-for-use.
If batteries without acid are to be used, before mounting them on the machine, it is necessary to make them active as follows:

- After taking off the battery plugs, fill up all elements with a solution of specific sulphuric acid, until the cells are thoroughly covered (fill each element at least twice);
- Let them rest for about 4-5 hours, to give time to air bubbles to come up to the surface and the plates to absorb the electrolyte;
- Check that the electrolyte level is still above the plates, otherwise top up with the solution of sulphuric acid;
- Reclose the plugs;

Install the storage batteries on the machine (following the procedure described below).
It is now necessary to perform a first recharging before having the machine start; to do so stick to the instructions written in the respective paragraph.

5.5.2 Batteries: installation and connection

! DANGER

Check that the key switch on the control panel is at the position "0" (off).
Mind you connect only the clips marked with the symbol "+" to the positive poles.
Do not check the battery charge by creating sparkles.
Stick scrupulously to the instructions described below, as any short circuits of the batteries may cause them to explode.

1) Make sure that the two tanks are empty (empty them, if necessary: see respective paragraph);
2) Unhook the recovery tank (fig. 2, ref. 2) from the solution tank (fig. 2, ref. 7) acting on the blocking hook, placed on front of the machine;
3) Lift the recovery tank, by making it turn backwards around about 90°: in this way you have access to the battery compartment (embedded in the solution tank) from the upper side;

4) Insert the batteries in the compartment, orienting them as shown in the drawing printed on the solution tank in the compartment.

☝ WARNING

Install the storage batteries on the machine using suitable means according to their weight.
Positive and negative poles have different diameters.

6) Referring to the arrangement of cables in the aforesaid drawing, connect the clips of the battery wiring and the bridge to the poles of the storage batteries. After orienting the cables as shown in the drawing, tighten the clips at the poles and cover them with vaseline;
7) Insert back the tank unit in its work position and hook it to the solution tank by means of the fixing hook;
8) Use the machine in compliance with the instructions written below.

5.5.3 Batteries: removal

! DANGER

When removing the batteries, the operator must be equipped with suitable personal protection devices (gloves, goggles, overalls, safety shoes, etc) to reduce the risk of accidents. Make sure the switches on the control panel are in the "0" position (off) and the machine is turned off. Keep away from naked flames, do not short circuit the battery poles, do not cause sparks and do not smoke. Proceed as follows:

- Disconnect the battery wiring and bridge terminals from the battery poles.
- If necessary, remove the devices fixing the battery to the base of the machine.
- Lift the batteries from the compartment using suitable lifting equipment.

5.6 The battery-charger

☝ WARNING

Never let the batteries run down excessively, as they could become damaged irreparably.

☝ WARNING

Before recharging the batteries, ensure that you have pressed the emergency button.

5.6.1 Choosing the battery-charger

Check that the battery-charger is compatible with the batteries to be charged:

- **Tubular lead batteries**: an automatic battery-charger 24V - 15A is suggested. Anyway, refer to the Manufacturer and read the relative manual to confirm your choice;
- **Gel batteries**: use a battery-charger specifically intended for this type of storage batteries.

5.6.2 Preparing the battery-charger

If you wish to use a battery-charger not supplied with the machine, it is necessary to mount on it the connector delivered with the machine (see paragraph “Unpacking” of this manual).
To install the connector proceed as follows:

- Remove about 13 mm of sheath from the black and red cables of the battery-charger;
- Insert the cables in the connector pins and push strongly with suitable pliers;
- Insert the cables in the connector respecting the polarity (red cable +, black cable –).

5.7 Lifting and handling the machine

☝ WARNING

All stages must be performed in an adequately lighted environment adopting all necessary safety measures.
Always wear individual protections for the user's safety.

The loading of the machine onto a vehicle must be done as follows:

- Empty the recovery tank and the solution tank;
- Remove the squeegee and the brushes (or drive discs);
- Remove the batteries;
- Place the machine on the pallet, engage the parking brake and secure it with plastic straps or metal brackets;
- Lift the pallet by means of a fork lift truck and load it on the vehicle;
- Anchor the machine to the vehicle with ropes connected to the pallet and to the chassis of the machine.

6. PRACTICAL GUIDE FOR THE USER

6.1 Control devices - Description

With reference to fig. 6 the machine has the following controls and leds:

- **Power supply led** (fig. 6, ref. 2 – ***Cable model only***): it is white and indicates that the power supply cable of the machine is connected to mains.
- **Battery charge level indicator** (fig. 6, ref. 2 – ***B and BT model only***): signals both "Power on" and the battery charge level. Note: the following percentages are based on the usable capacity and not the total capacity of the batteries (therefore 100% flat = 80% of total battery capacity). Possible situations are:
  a) **green light:** batteries charged from 100% to 50%;
  b) **yellow light:** batteries charged from 50% to 18%;
  c) **red light (also simultaneously with yellow or green light):** batteries flat and must be recharged.
- **Main switch - with key** (fig. 6, ref. 1 ***Battery and Cable model***): enables or disables the power supply to all the machine functions. It acts as a safety device..
- **Emergency button with key**(fig. 6, ref. 1 ***BT model only***): acts as a safety device. enables and disables the electrical power supply to all machine functions To stop the machine press the button.
- **Brush control switch:** Brush switch with LED (fig. 6, ref. 3).
- **Tap lever** (fig. 6, ref. 7): allows to adjust continuously the flow of solution sent to the brushes. Pull up to increase the liquid outflow.
- **Drive control lever** (fig. 6, ref. 8): the drive control lever permits forward movement of the machine and rotation of the brushes.
- **Squeegee lifting lever** (fig.7 ref. 5): it allows to raise (when lifted) or lower (when pushed down) the squeegee. When it is pressed down, the suction motor is also switched on for drying the floor.
- **Hour meter** (fig. 6 ref. 2): displays the hours of work of the brush.
- **Direction adjustment knob** (fig. 4, ref. 2): turn to correct any deviation of the machine and keep it moving in a straight line.
- **Head lower/lift pedal** (fig. 6, ref. 10): located on the left-hand side of the machine, when pressed it lowers/raises the brush head.
- **Solution tank level indicator** (fig. 6, ref. 4): the led comes on to indicate insufficient water in the solution tank.
- **Recovery tank level indicator** (fig. 6, ref. 5): when the recovery tank is full the led

comes on and after a few seconds the suction motor locks out.

- **Alarm indicator (**fig. 6, ref. 14 - ***BT model only***), depending on the frequency the LEDs come on, defines the board error code (see chapter 10). When operating without malfunction, the LED is on steadily.
- **Speed potentiometer** (fig. 6 ref. 12 - ***BT model only***): regulates the speed of the machine forwards and backwards
- **Direction selector** (fig. 6, ref. 13 - ***BT model only***): move this selector to set movement of the machine to forwards or reverse

6.2 Installing and adjusting the squeegee

The floor wiper, also called squeegee (fig. 2, ref. 6), is the first responsible for drying.
To install the squeegee on the machine proceed as follows:
1) Stop the machine with key switch (fig. 6, ref. 1);
2) Check that the squeegee supporting plate (fig. 7, ref. 2) is raised, otherwise lift it by acting on the proper lever (fig. 7, ref. 5);
3) Firmly push down the sleeve of the suction tube (fig. 7, ref. 4) into the squeegee;
4) Slacken the two knobs (fig. 7, ref. 3) placed in the centre of the squeegee;
5) Insert the two threaded dowels in the slots of the support (fig. 7, ref. 2);
6) Fix the squeegee by tightening the knobs (fig. 7, ref. 3).

The blades of the squeegee are used to scrub from the floor the film of water and detergent thus allowing a perfect drying. As long as time goes by the continuous scraping rounds off and splits the sharp edge in contact with the floor, thus reducing the drying efficacy and therefore requiring the replacement of the blades. Therefore, often check their state of wear and tear.
To obtain a perfect drying action it is necessary to adjust the squeegee in such a way that when it is in operation, the rear blade lip is bent about 45 degrees with respect to the floor at all points. It is possible to adjust the inclination of the blades by screwing down the nuts (fig. 7, ref. 1): by unscrewing the nuts the blade inclination is reduced, while by screwing the nuts the blade inclination is increased.
Moreover, check that the suction hole of the squeegee is not clogged, to let dirty water to be perfectly drained from the floor.

6.3 Movement of the machine when not operating

The machine is provided with transport wheel; to move it, follow the instructions below:
1) Raise the squeegee;
2) Push the handgrip down to raise the front part, thus lowering the transport wheel until it locks in position;
3) Move as follows:
   - ***Versions with mechanical drive***: push or pull;
   - ***Versions with electrical drive***: to move the machine forwards, move the selector to forward position (fig. 6 ref. 13), and then operate the drive lever (fig. 6 ref. 8). To move the machine backwards, move the selector (fig. 6 ref. 13) to reverse position, then operate the drive lever (fig. 6. ref. 8); speed can be varied by the potentiometer knob (fig. 6. ref. 12).
4) Once you have reached the desired spot, lower the head by pushing down the release pedal (fig. 6, ref. 10).

☝ WARNING

Do not leave the machine unattended or parked with the head lifted or the key inserted in the emergency button.

6.4 Installing and replacing the brushes / drive discs / rollers

☝ WARNING

Do not work if the brushes or drive discs are not perfectly installed.

Fitting the brush: Rest the brush on the floor in front of the machine and centre it with the guard. Lower the head and repeatedly action the brush/drive control lever (fig. 6, ref. 8) until the brush automatically engages on the flange hub. If the manoeuvre is not successful, press on the handle again and repeat the centring and repeated actioning of the brush/drive lever.
Use of abrasive disks: fit the abrasive/microfibre disk on the drive disk and perform the operations described for fitting the brush on the scrubber drier.

Removing the brush (or drive disc). Raise the machine head by pushing the head lift pedal down and then to the right (fig. 6, ref. 10) and repeatedly action the brush/drive lever. After a few pulses, the brush/es (or drive disk) is released and falls to the ground.

☝ WARNING

In particular conditions, the brushes may not engage correctly. In this case the head will vibrate. The brushes must be disassembled and refitted.

6.5 Detergents - Use

☝ WARNING

Always dilute detergents according to the supplier's instructions. Do not use sodium hypochlorite (bleaching solution) or other oxidizers, especially if in high concentrations, and do not use solvents or hydrocarbons. The temperatures for water and detergent must not exceed the maximum temperatures indicated in the technical data and must be free from sand and/or other impurities.

The machine has been designed for use with low-foam biodegradable detergents made specifically for scrubber driers.
Contact the Manufacturer to have a complete and updated list of the available detergents and chemical products; you will receive all papers together with the Manual "Complete cleaning system".
Use only products suitable for floors and for removing dirt.
Follow the safety rules concerning the use of detergents indicated in the paragraph "Safety regulations".

6.6 Setting up the machine

☝ WARNING

Before starting to work wear an apron, cap, non-slip waterproof shoes, a mask to protect the respiratory system, gloves and any other form of protection indicated by the supplier of the detergent or necessary in the environment you are going to work in.

Before starting to work, perform the following operations:

- ***Battery models:*** check the battery charge level (recharge if necessary);
- Lower the head by means of the pedal (fig. 6, ref. 10);
- Ensure that the recovery tank (fig. 2, ref. 2) is empty; if not, empty it;
- Check that the tap control lever (fig. 6, ref. 7) is in the "closed" position;
- Via the front opening provided, fill the solution tank (fig. 2, ref. 7) with clean water and low-foaming detergent in an appropriate concentration: leave at least 5 cm difference in level between the surface of the liquid and the tank inlet;
- Fit suitable brushes or drive discs for the floor and the work to be performed (see paragraph 6.4);
- Check that the squeegee (fig. 2, ref. 6) is well secured and connected to the suction pipe (fig. 7, ref. 4); ensure that the rear blade is not worn.

i INFORMATION

If you use the machine for the first time, it is advisable that you train with it for a short time on a wide surface without any obstacles, to acquire the necessary familiarity.
Always empty the recovery tank before refilling the solution tank.

For an effective cleaning and long life of the equipment, it is necessary to follow some simple rules:

- Prepare the work area, keeping away the possible obstacles;
- Begin to work starting from the farthest spot, in order to avoid trampling on the area just-cleaned;
- Choose paths that are as much straight as possible;
- On wide floors divide the paths into rectangular and parallel areas.

At the end quickly mop the area, if necessary, to clean spots that are inaccessible to the scrubber.

6.7 Work

After setting up the machine, proceed as follows:

- Connect the machine to the power supply:
  - cable model: plug the machine into the mains power socket;
- Insert and operate the key and switch to the “on” postion(fig. 6, ref. 1, B and C model) or insert and operate the key to release the emergency button (fig. 6, ref. 1, BT model only), and make all the machine functions active: the power supply led lights up (fig. 6, ref. 2);
- Move the tap lever (fig. 6, ref. 7) to the position of minimum flow of solution: the detergent solution begins to reach the brush;
- Lower the squeegee by means of the proper lever (fig. 7, ref. 5);
- ***Versions with mechanical drive:*** press the brush switch (fig. 6, ref. 3) and led on, to enable the function “brush”;
- ***Versions with electric drive:*** press the brush switch (fig. 6, ref. 3) and led on, to enable the function “brush”;
- Press brush/drive control lever (fig. 6, ref. 8);
- ***Versions with mechanical drive:*** when the brush switch is on and the drive lever is pulled, the motor which turns the brush and moves the machine starts up. A special mechanical drive device uses the friction between the brush and floor to generate a forward movement. When the mechanical drive lever is released, the brush motor shuts down and the machine stops.

If the machine pulls to one side, restore a straight course by using the direction regulation knob (fig. 4, ref. 2). If the machine pulls to the right, turn the knob clockwise and vice versa.

- ***Models with electric drive:*** to move forwards or backwards, see paragraph 6.3.

In both versions:

- Periodically check that the detergent solution reaches the brushes and refill when finished; when water in the solution tank is no longer sufficient, the level indicator will come on (fig. 6, ref. 4): stop and fill the tank;
- During work check the cleaning quality and adjust the solution flow sent to the brushes by raising or lowering the lever (fig. 6, ref. 7) as required.

☝ WARNING

Never leave the machine stationary with the head lowered and the brushes in motion: the floor could be damaged.

☝ WARNING

Whenever you fill up the solution tank, always empty the recovery tank.
Do not leave the machine stationary with the suction motor on and the solution cock turned on.

- If the recovery tank is full, the level indicator will come on (fig. 6, ref 5) and after a few seconds the suction motor will lock out: stop and empty the tank; to re-start the suction motor, switch the suction switch off and then on again.
- ***Models with battery:*** if the warning led (fig. 6, ref. 2) starts flashing, it means that the storage batteries are getting flat. After a few seconds the brushes lock to prevent excessive unload. Load them.

At the end of work:

- Move the tap lever (fig. 6, ref. 7) to the position “closed”;
- Release the brush/drive lever (fig. 6, ref. 8) placed beneath the handle: the brush/drive motor switches off and the machine stops;
- Press the brush switch (fig. 6, ref. 3, led off) to disable the function “brush”;
- Raising the lever (fig. 6, ref. 9), lift the scrubber from the floor to prevent the drying blades from warping due to the continuous pressure;
- Remove the brushes (or drive discs) to prevent them from warping permanently;
- Depending on the model, unplug the machine or switch off the key swithc (fig. 6, ref. 1);
- Empty and clean the recovery tank ;

6.8 Some useful suggestions for the optimal use of the machine

If the floor presents a particularly resistant type of dirt, it is possible to make the machine wash and dry it in separate stages.

6.8.1 Pre-washing

- Open the water cock;
- Set the brush switch to on;
- Lower the head;
- Operate the drive lever to rotate the brushes;
- Ensure that the suction device is off and that the squeegee is raised;
- Begin washing.

The flow of water must be dosed in proportion to the desired advance speed: the slower the machine goes, less water comes down.
Insist on washing the dirtiest spots: in this way the detergent has the time to perform its chemical action for the detachment and suspension of dirt, and the brushes to develop an effective mechanical action.

6.8.2 Drying

Lower the squeegee and with the suction unit operating pass again on the same area you have previously washed. In this way you obtain a result that is similar to a thorough washing and the following operations of ordinary maintenance will certainly take less time.
To wash and dry at the same time, operate the brushes, water, squeegee and suction motor simultaneously.

☝ WARNING

Never leave the machine unmanned with the suction unit running.

6.9 Draining off dirty water

! DANGER

Use the individual protection devices suitable for the operation to be performed. Perform the draining operations with the machine disconnected from the power supply.

The drain hose of the recovery tank is located at the rear left side of the machine.
To empty the above-mentioned tank:

- Take the machine next to a drain;
- Detach the drain hose (fig. 8, ref. 2) from its seat, holding it in correspondence with the fixing spring (fig. 8, ref. 3) and pull it horizontally;
- Keeping the hose end as much high as possible, take off the drain cock (fig. 8, ref. 2) by unscrewing it;
- Lower the hose end gradually, checking the intensity of the jet of water with reference to its height from the ground;
- Check the amount of residual dirt in the recovery tank and wash it inside, if necessary. To facilitate the cleaning and total drain, it is better to unhook it from the solution tank and lift it;
- When the dirty water has been totally drained, lower the recovery tank (if it has been previously lifted) and hook it again to the solution tank;
- Close the drain hose (fig. 8, ref. 2) with the cock (fig. 8, ref. 2) screw-tightening it; check that it is perfectly closed and refit the hose in its housing.

☝ WARNING

While washing the recovery tank never remove the suction filter (fig. 10, ref. 2**) from its seat and never direct the jet of water towards the filter itself.**

Now it is possible to proceed with a new washing and drying action.

6.10 Draining off clean water

! DANGER

Use the individual protection devices suitable for the operation to be performed. Perform the draining off operations with the machine disconnected from the power supply.

To empty the tank:

- Take the machine next to a drain;
- Take off the drain cock (fig. 9, ref. 1)
- When the contents have been totally drained from the solution tank, close the cap (fig. 9, ref. 1); check that it is perfectly closed.

i INFORMATION

The water and detergent solution can also be used to wash the recovery tank.

7. PERIODS OF INACTIVITY

If the machine is to remain unused for a long time, the squeegee and brushes (or drive discs or rollers) must be dismounted, washed and kept in a dry place (preferably packed in a plastic envelope or sheet), sheltered from dust. Park the machine with the small carriage in the raised position.

Furthermore, make sure that the tanks are completely empty and perfectly clean.

Disconnect the machine from the power supply (depending on the model: unplug the machine from the mains or disconnect the ANDERSON connector from the battery wiring). ***Models with battery:*** recharge the batteries completely before putting them in the storehouse. During long periods of inactivity recharge the batteries (once every two months at least) to preserve the storage batteries constantly at the maximum charge.

☝ WARNING

If the batteries are not recharged periodically, they may become damaged irreparably.

8. MAINTENANCE AND BATTERY RECHARGING

! DANGER

Do not check the battery charge by producing sparks.
The batteries give off inflammable vapours: put out any fire or embers before checking and filling up the batteries.
Perform the operations described below in airy environments.

8.1 Recharging procedures

- Stop the machine and press the emergency button (fig. 6, ref. 1);
- If the machine has an on-board battery charger, connect the on-board battery charger power cable
- If the machine does not have an on-board charger, connect the external battery charger connector to the battery wiring connector (fig.4, ref.1).

☝ IMPORTANT

During recharging do not let the temperature of the electrolyte exceed 45°C.

☝ IMPORTANT

Use only a battery-charger that is specific for gel storage batteries.

- Charge the batteries as described in the battery charger manual;
- At the end of charging, switch off the battery charger before disconnecting the connectors; (machine with external battery charger). Or if you are use the on-board charger, please disconnect the power cable.

9. INSTRUCTIONS FOR MAINTENANCE

! DANGER

Before carrying out any maintenance operations, unplug the machine from the mains (models with cable) or disconnect the machine connector from the battery connector.
All maintenance operations on the electric system and those not explicitly described in this manual must only be performed by trained technical staff in compliance with the safety regulations in force and recommendations stated in the maintenance manual.

9.1 Maintenance – General rules

A regular maintenance performed according to the Manufacturer's intructions guarantees a better performance and endurance of the machine.
When cleaning the machine always observe the following instructions:

- avoid using water cleaners, which could let water go inside the electric or the motor compartments with a consequent damage or hazard of short circuits;
- do not use steam in order not to warp the plastic parts;
- do not use solvents or hydrocarbons, which could damage the hoods or the rubber parts.

9.2 Routine maintenance

9.2.1 Suction air filter and floating rod: cleaning

- Unscrew and take off the tank cap (fig. 10, ref. 1) from the recovery tank (fig. 10, ref. 4);
- Make sure that the recovery tank (fig. 10, ref. 4) is empty;
- Clean the floater (fig. 10, ref. 5) on the rear wall of the recovery tank ensuring that you do not aim the water jet directly at the floater;
- Take out the air filter (fig. 10, ref. 2) of the suction unit from the float support (fig. 10, ref. 3), which is located on the upper inner side of the recovery tank;
- Clean the filter with current water or with the detergent used in the machine;
- Put the filter back in the support onzy after having it dried well;
- Make sure that the filter has been replaced in its seat correctly;
- Screw again the cap on the recovery tank.

9.2.2 Basket filter: cleaning

- Take the basket filter out of the water inlet at the front of the machine;
- clean the filter under running water or with the detergent used in the machine;
- refit the filter in the support, ensuring that you have repositioned it correctly.

9.2.3 Detergent solution filter: cleaning

- Unscrew the screw located below the bottom tank (fig. 11, ref. 1);
- Unscrew the detergent solution filter (fig. 11, ref. 1);
- Clean the filter under running water or with the detergent used in the machine;
- Refit the filter in the support, ensuring that you have repositioned it correctly, and retighten the screw.

9.2.4 Squeegee blades: replacement

The blades of the squeegee are used to scrub from the floor the film of water and detergent thus allowing a perfect drying. As long as time goes by the continuous scraping rounds off and splits the sharp edge in contact with the floor, thus reducing the drying efficacy and therefore requiring the replacement of the blades. Therefore, often check their state of wear and tear.

Exchanging or replacing the blades:

- Lower the squeegee by using the proper lever (fig. 6, ref. 9);
- Take off the squeegee (fig. 2, ref. 6) from its supporting plate (fig. 7, ref. 2) by unscrewing completely the two knobs (fig. 7, ref. 3);
- Slide out the sleeve of the suction tube (fig. 7, ref. 4) from the squeegee. Unhook the hook clamp (fig. 12, ref. 3 or 6);
- Slide out the two blade clamps (fig. 12, ref. 2 or 7) by first pushing them outwards with respect to the squeegee unit (fig. 12, ref. 1) and then taking them out;
- Remove the blade (fig. 12, ref. 4 or 5);
- Fit in the same blade inverting the edge in contact with the floor until all the four edges

are worn, or else fit in a new blade embedding it in the screws of the squeegee unit (fig. 12, ref. 1);
- Put the two blade clamps (fig. 12, ref. 2 or 7) back, centering the largest part of the slots on the fixing screws of the squeegee unit (fig. 12, ref. 1) and then pushing the blade clamps towards the inside of the squeegee itself;
- Hook the clamp (fig. 12, ref. 3 or 6) again.

Insert the squeegee back on its support following the instructions reported in §6.2.

9.2.5 Fuses: replacement

The fuse protecting the brush motor and the fuse protecting the suction motor are located in the fuse carrier (fig. 13, ref. 1) fixed to the recovery tank above the machine battery compartment. To replace them:
- Ensure that the recovery tank is empty; if not, empty it;
- Raise the recovery tank;
- Raise the fuse block cover and remove the fuse by unscrewing the fixing screws;
- Fit a new fuse and close the fuse block cover;
- Lower the recovery tank.

Fuse table: for the complete fuse table, consult the spare parts catalogue.

☝ WARNING

Never fit a fuse with a higher Amp value than the intended one.

9.3 Periodic maintenance

9.3.1 Daily maintenance

Every day at the end of work perform the following operations:
- Disconnected the machine from the power supply;
- Empty the recovery tank and clean it, if necessary;
- Clean the squeegee blades, checking that they are not excessively worn; replace them, if necessary;
- Make sure that the squeegee suction hole is not clogged, freeing it from any encrusted dirt;
- ***Models with battery:*** recharge the batteries according to the procedure described above.

9.3.2 Weekly maintenance

- Clean the floating rod of the recovery tank and check that it works correctly;
- Clean the suction air filter and check that it is not damaged (replace it, if necessary);
- Clean the solution filter placed at the front opening of the solution tank (fig. 2, ref. 7) and check that it is not damaged (replace it, if necessary);
- Clean the suction tube;
- Clean the recovery tank and the solution tank;
- ***Models with battery:*** check the level of the electrolyte in the batteries and top up with distilled water, if necessary.

9.3.3 Six-monthly maintenance

- Have the electric system, calibrations checked by qualified staff;

10. TROUBLESHOOTING

10.1 How to overcome possible failures

[B]= machines with battery
[C]= machines with cable
[BT]= battery machine with electrical drive

Possible failures affecting the whole machine

FAILURES	CAUSES	REMEDIES
The machine does not work	• **[B]=** the battery connector is disconnected	• **[B]=** connect the batteries to the machine
	• **[B]=** the batteries are flat	• **[B]=** recharge the batteries
	• **[C]=** the machine plug is disconncted from the mains	• **[C]=** plug the machine
	• the emergency button is pressed or faulty	• insert the key, turn and release or replace the button
The brushes do not turn	• the emergency button is pressed or faulty	• insert the key, turn and release or replace the button
	• the brush switch is at the position “0”	• turn the brush switch to position “1”
	• the brush lever is not pressed	• press the brush lever
	• **[B]=** the brush motor thermal protection has tripped: the motor has become overheated	• **[B]=** release the brush lever, turn the brush switch to position “0” (off), letting the machine cool down for at least 45’
	• **[B]=** the power supply connector or the motor thermal protection connector are disconnected	• **[B]=** connect again the power supply connector or the motor thermal protection connector
	• **[C]=** the motor power supply connector is disconnected	• **[C]=** connect again the motor power supply connector
	• **[B]=** the thermal protection fuse (**F6**) and/or the 60A (**F7**) fuse of the brush motor have blown	• **[B]=** check and remove the causes that made the fuse blow, then replace it
	• **[BT] =** drive board/brush timer failure	• **[BT] =** enable “immediate stop” function via fuses **FU4** and **FU5** as shown in paragraph 6.7.1 and on label SL55061 on control panel
	• **[B]=** the brush microswitch is not calibrated or is faulty	• **[B]=** have the microswitch calibrated or replaced
	• **[B]=** the brush motor contactor is faulty	• **[B]=** have the contactor replaced
	• **[C]=** the brush motor relay is faulty	• **[C]=** have the relay replaced
	• **[B]=** the batteries are flat	• **[B]=** recharge the batteries
	• the belt is broken	• have the belt replaced
	• the motor is faulty	• have the motor replaced

The brush motor has trouble in starting (in *models with cable* only)	• you are working with a dry brush on a very rough floor	• turn on the detergent solution cock
	• you are working with extensions having an inadequate section on the power supply cable, or the voltage is sensibly lower than that intended for the scrubber (15% less)	• avoid the use of inadequate extensions. Increase the section of the electric wires and find out sockets with a higher voltage
	• the motor is faulty	• have the motor replaced

The machine does not wash evenly	• the brush or abrasive disc is worn	• replace them
	• the pressure exercised by the head on the floor is not right	• adjust the brush pressure on the floor acting on the proper lever

The brush keeps on turning also when the main switch and/or brush switch have been pressed	• **[B]=** the brush contactor is faulty	• **[B]=** have it replaced

The solution does not come out	• the cock control lever is at the position “CLOSED”	• move the lever to the position “OPEN”
	• the solution tank is empty	• fill it up
	• there is an obstruction in the tube through which the solution is pumped to the brush	• remove the clogging, cleaning the ducts
	• the tap is dirty or does not work	• clean or replace the tap, unscrewing the screw ref. 1 in fig. 14

The flow of solution keeps coming to the brush	• the tap remains open, because it is damaged or very dirty	• have the tap cleaned or replaced

The suction motor does not work	• the suction unit switch is at the position ‘0’ (off)	• operate the suction unit switch
	• the suction motor is not fed or is faulty	• check that the motor power supply connector is connected to the main wiring in the right way; in the second case have the motor replaced
	• **[B]**= the fuse has blown (**F3**)	• **[B]**= replace the fuse **F3**
	• **[C]**= the fuse has blown (**F1**)	• **[C]**= replace the fuse **F1**
	• **[B]=** the batteries are flat	• **[B]=** recharge the batteries

The squeegee does not clean or suck well	• the edge of the rubber blades in contact with the floor is rounded off	• replace the rubber blade
	• there is an obstruction or damage in the squeegee or in the tube	• remove the obstruction and repair the damage
	• the float has intervened (recovery tank full), or is blocked by dirt or broken	• empty the recovery tank or make the necessary repairs to the float
	• there is an obstruction in the suction tube	• free the tube from the obstruction
	• the suction tube is not connected to the squeegee or is damaged	• connect or repair the tube
	• the suction unit motor is not fed or is faulty	• check that the motor power supply connector is connected to the main wiring in the right way and that the protection fuse has not blown; in the second case replace the motor

The machine does not move forward	• the brush/drive motor is not fed or is faulty	• in the first case turn the emergency switch key clockwise, set the brush switch to "1" and press the brush/drive lever; in the second case check that the brush/drive motor is connected to the main wiring in the right way; in the third case replace the motor
	• the belt is broken (therefore, the brush does not turn)	• have the belt replaced
	• the thermal protection of the brush motor has tripped: the motor has become overheated	• stop the machine and switch it off, letting it cool down for at least 45’
	• the microswitch is faulty or not calibrated	• replace or calibrate it
	• **[B]=** the batteries are flat	• **[B]=** recharge the batteries

The machine tends to swerve to one side (*Mod. 50-55* only)	• the floor requires an adjustment on the direction adjusting knob	• adjust the advance direction acting on the speed adjusting knob

The batteries do not ensure the normal work time (*models with battery* only)	• the poles and charging clips of the batteries are dirty and oxydized	• clean and grease the poles and clips, recharge the batteries
	• the electrolyte level is low	• add distilled water topping up all elements according to the instructions
	• the battery-charger does not work or is unsuitable	• see instructions relative to the battery-charger
	• there are considerable differences in density between the various elements of the battery	• replace the damaged battery
	• the machine is working with a too high pressure on the brush	• reduce pressure on the brush

The storage battery gets flat too fast during use, although it has been charged in the correct way and when tested with a densimeter at the end of recharging, it turned out to be uniformly charged (*models with battery* only)	• the storage battery is new and does not give 100% of its expected capacity	• it is necessary to "run-in" the storage battery by 20-30 charges and discharges to obtain maximum performance
	• the machine is used at its maximum capacity for continuous periods and the autonomy is not sufficient	• use, if possible, storage batteries with larger capacity or replace the storage batteries with others already charged
	• the electrolyte has evaporated and does not cover the plates completely	• add distilled water, topping up all elements until the plates are covered and recharge the storage battery

The storage battery gets flat too fast during use, the recharging with an electronic battery-charger is too fast and at the end the storage battery gives the right voltage (about 2,14V for each empty element), but it turns out to be not uniformly charged when tested with densimeter (*models with battery* only)	• the storage battery, already filled with acid by the Manufacturer, has been stored for a too long time before being recharged and used for the first time	• if the recharging with a normal storage-charger is not effective, it is necessary to carry out a double recharging consisting in: - a slow recharging of about 10 hours with a current equal to 1/10 of the rated capacity expressed in 5 hours (ex.: for a storage battery of 100Ah(5), the current should be 10A, realized by a manual battery-charger); - one-hour pause; - charging with a normal battery-charger

10.2 Motor drive alarm board

The board controlling the motor drive is located inside the front upright (fig. C ref. 6). If drive is interrupted, the error code should be identified by means of the status LED. In the absence of malfunctions, the status LED is steadily on while the machine is in operation. If a malfunction is detected, the status LED provides two types of information, a slow flash (2 Hz) or a rapid flash (4 Hz) to indicate the severity of the malfunction.
Malfunctions with a slow flash are cancelled automatically once the malfunction has been repaired and the machine functions normally again. Malfunctions with a rapid flash ("*" in the table) are considered more serious. The machine must be turned of using the key switch (fig. A ref. 1) to reset operation after repairing the malfunction.
The indication of severity remains active for 10 seconds, after which the status LED flashes constantly showing a two digit malfunction code until the repairs have been carried out.
For example, error code "1,3" is displayed as follows:

☼ ☼☼☼ **example alarm code 1,3**

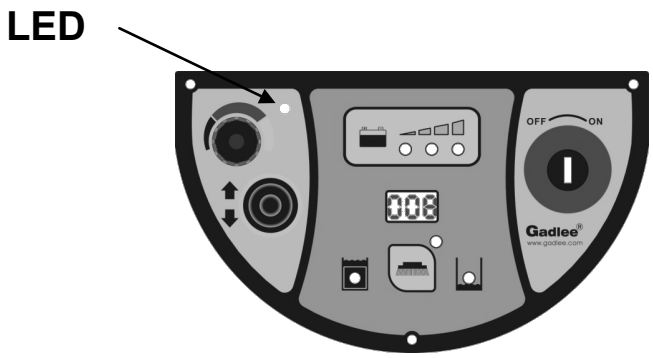

LED CODES			DESCRIPTION
	1,1	☼ ☼	Overheating > 92°
	1,2	☼ ☼☼	Accelerator malfunction
	1,3	☼ ☼☼☼	Speed limiter potentiometer malfunction
	1,4	☼ ☼☼☼☼	Overvoltage malfunction
	1,5	☼ ☼☼☼☼☼	Undervoltage malfunction
	2,1	☼☼ ☼	Principal contactor actuator opening failure
	2,3	☼☼ ☼☼☼	Principal contactor actuator closing failure
*	3,1	☼☼☼ ☼	Accelerator potentiometer malfunction
	3,2	☼☼☼ ☼☼	Brake activation malfunction
	3,3	☼☼☼ ☼☼☼	Low battery voltage
	3,4	☼☼☼ ☼☼☼☼	Brake deactivation malfunction
	3,5	☼☼☼ ☼☼☼☼☼	HPD malfunction (incorrect regulation of accelerator potentiometer)
*	4,1	☼☼☼☼ ☼	Motor short circuit
*	4,2	☼☼☼☼ ☼☼	Incorrect motor voltage/short circuit in motor
*	4,3	☼☼☼☼ ☼☼☼	EEPROM malfunction
*	4,4	☼☼☼☼ ☼☼☼☼	Short circuit in motor/EEPROM error

中文

1. 目录

1. 目录 2
2. 概述 4
   2.1. 手册的内容 4
   2.2. 机器的识别 5
   2.3. 随机文档 5
3. 技术信息 5
   3.1. 概述 5
   3.2. 图例 5
   3.3. 危险区域 5
   3.4. 附件 6
4. 安全信息 6
   4.1. 安全守则 6
5. 操控及安装 8
   5.1. 机器（含包装）的运输及升降 8
   5.2. 机器运输的检查 8
   5.3. 包装拆卸 8
   5.4. 电源线连接及安全接地（拖线机型） 9
   5.5. 电瓶安装（电瓶机型） 9
      5.5.1. 电瓶: 预备事项 9
      5.5.2. 电瓶: 安装及连接 10
      5.5.3. 电瓶： 卸装 10
   5.6. 电瓶充电器 11
      5.6.1. 电瓶充电器的选择 11
      5.6.2. 充电器的准备 11
   5.7. 机器的运输及升降 11
6. 使用者操作指引 11
   6.1. 操控 – 描述 11
   6.2. 吸水扒的安装与调节 12
   6.3. 机器不在工作状态时的移动 12
   6.4. 刷子（针座）装卸 13
   6.5. 清洁剂的使用 13
   6.6. 工作前准备 13
   6.7. 机器的工作 14
   6.8. 清洗建议 15
      6.8.1. 预洗 15
      6.8.2. 吸干 15
   6.9. 污水排放 15
   6.10. 清水排放 16
7. 机器长时间停止运行 16
8. 电瓶的维护与充电 16
   8.1. 充电程序 16
9. 机器维护指导 17

9.1. 维护 – 概述 17
9.2. 常规维护 17
9.2.1 吸水电机过滤网及浮球感应器：清洁 17
9.2.2 清水箱过滤器: 清洁 17
9.2.3 出水过滤器清洗 17
9.2.4 吸水胶条的更换 17
9.2.5 保险丝更换（电瓶式机器） 18
9.3. 周期性维护 18
9.3.1. 日常维护 18
9.3.2. 每周维护 18
9.3.3. 每半年维护 18
10. 故障速查及错误代码 19
10.1. 如何解决可能出现的问题 19
10.2. 驱动卡报警代码 21

2. 概述

在对机器进行任何操作之前，请先认真阅读本操作说明 [1]

2.1. 手册的内容

使用手册是由制造商起草写成的。被当作是整体机器的一个部分。它的内容是所生产的机器使用时包含的所有具体要求。
在此手册中包含了使用者[2]必须掌握的基本信息。其他文件也有阐述的，它包含了保养的特别技术信息[3]。
按照手册来操作，可以确保操作人员和机器的安全。同时可减低机器的运作消耗，获得优秀洗地效果和持久的工作时间。如果不遵循手册来操作，有可能会导致工作人员的发生伤害和机器的发生损坏，损坏工作地面，甚至那里的环境。
请查看手册的目录，你就可以快速的找到相关的的章节。
以下章节是不可忽视的，请务必注意下面的粗体文字和图形的说明。

! 危险

表示必须要注意小心操作，要了解清楚操作说明事项，否则会引起人员的受伤甚至会导致死亡。

☝ 重要提示

表示必须要注意小心操作，要了解清楚操作说明事项，否则会引起一系列不良后果。如:损坏机器，损坏机器使用的场所，从而造成经济损失。

i 信息

需特别注意的操作

由于制造商会对产品进行必要的更新及改进，制造商有权在没有任何预先通知的情况下对机器进行更新。
机器可能会和说明书的图标略有不同，但在说明书上显示的信息及安全可以获得保证。

[1] 本操作说明书中"机器"的定义为实际产品的型号

[2] 对机器进行维护操作的授权人员必须具备精确的技术知识.

[3] 对机器进行安装，使用及维护操作的人员，必须具备相关经验，做好技术准备，熟知相关的法律规章，并且能够识别及避免有可能发生的危险.

2.2. 机器的识别

机身标签(图. 1)粘贴在机身商，列出以下机器资料：

- 机器型号(Model)
- 工作电源(V)
- 总功率(Power)
- 出厂序列号(Ser.N)
- 生产日期(Date)
- 净重(Weight)
- 防护等级（IP）
- 爬坡能力
- 生产厂商资料

2.3. 随机文档

- 用户手册
- 质保卡
- CE 符合性声明.

3. 技术信息

3.1. 概述

这台机器是一款全自动洗地机，能够在公共区域或者在工业环境下进行清洗工作，自动完成地面清洗和污水回收工作。该款机器备有电瓶驱动式及拖线（交流电）式两种型号。自动洗地机能够将清洁剂和清水自动分配到地面上进行清洗，清除赃物。配合选择正确的清洁剂和洗地刷，这款机器可以适合任何地面使用。
机器内置清水箱及污水箱，能够在清洗地面的同时，完成吸水（污水回收）的工作，吸水功能工作原理是利用安装于污水箱的吸水电机，形成一个真空吸水器，通过吸水扒将地面的脏水吸干并将它回收进污水箱。

3.2. 图例

机器的主要部件如下（图. 2）

- 清水箱（图. 2, 位置.7）：盛载清水及清洁剂
- 污水箱（图. 2, 位置. 2）：回收污水
- 控制面板（图. 2, 位置. 1）
- 清洗系统（图. 2, 位置.4）：由刷子（图.2, 位置. 5）及防护盖组成，负责分配清水及清洗地面。
- 吸水扒（图.2, 位置. 6）：回收地面污水。
- 刷子升降踏板（图. 2, 位置.3）：机器运输的升起刷子系统。

3.3. 危险区域

A -**水箱系统**: 当使用经过认证的清洁剂事，要避免清洁剂溅到眼镜、皮肤等；从环境中收集脏物事引发的危险（细菌和化学物质）； 从清水箱上卸下污水箱可能会引致危险的发生.

B -**控制面板:** 短路的危险.

C -**刷盘底部:** 刷子旋转会产生危险.

D -**后轮:** 后轮和底架会产生压伤的危险.

E -**电瓶箱:** 电极会产生短路的危险，充电时会产生气体.

3.4. 附件

- 软毛：用于清洗光滑的地面或者抛光
- 尼龙刷子：用于普通地面清洗（标准配置）
- 硬毛：用于去除顽固的地面污垢
- 针座：用于使用以下百洁垫：
  - *白垫：用于普通清洗和抛光，大理石和平滑的地面
  - *红垫：用于普通地面清洗
  - *黑垫：用于去除顽固的污垢

4. 安全信息

4.1. 安全守则

在启动和使用机器前，或者进行维护和操作前，请先认证阅读“用户手册”.

☝ 重要提示

请严格遵守本操作手册中所有的使用说明(尤其是有关危险和警告部分)和机身上的所有安全提示标签。
制造商对违反操作说明而导致的人员伤害和财产损坏不付任何责任。

机器必须由受过培训的人员进行操作使用,此员工必须熟悉操作及经过认证.
未成年人严禁使用机器.
本机器不能用于超出设计范围的其他用途.在特殊环境（例如制药业，医院，化工业等）使用时，必须要严格遵守相关的安全标准及条例.
本机器不能在黑暗无光的地方，易引起爆炸的地方，存在对人体有害物质的场所及不合适的环境使用.
本机器使用时的合适温度是+4°C 至+35°C.当机器闲置存储时的温度为+0°C 至+50°C
机器适宜工作的湿度介于30%至95%。
本机器不能用来吸收易燃易爆液体(如：汽油,燃油等等);易燃气体,干灰尘,酸性和溶解性物质(如：溶解性油漆,丙铜等).不能吸收燃烧的热的物体.
机器严禁工作在倾斜的表面或者坡度高超过2%的斜坡上.如果机器在坡度高度小的坡上工作,请不要横向使用.要特别小心并且不能往后退.当沿着斜坡行驶时,要特别注意防止机器翻倒，严禁突然加速。在斜坡上行驶时，必须将刷盘和吸水扒升起。
任何时候都禁止将机器停放在斜坡上
机器的电机没有停止运转时，操作人员严禁离开机器，离开机器前,先将启动钥匙开关关闭,断开电源，并使停车制动生效，确保其不会突然移动。
不管在何处进行作业时,请注意在你工作现场出现的的人员及小孩.
严禁将机器用于运输用途及拖动其他物体。严禁拖动机器.

不要在机器上方存放任何物体.
不要将通风处和散热处堵塞
不要移动,修改或是遮盖安全装置.
经验表明，在工作期间整理个人物品等的行为会引起严重的事故发生。开始工作前,请先脱掉首饰，手表，领带等等.
工作人员必须穿着及佩戴防护衣物及护具－防护围裙/保护套, 防滑防水鞋, 橡皮手套, 眼睛护罩和帽子,耳塞,面罩等。
不要将手放入运动转动部件中.
禁止使用不符合规定的清洁剂. 必须根据安全指引使用.我们建议不要让儿童接触清洁剂.
如果不慎接触到眼睛，请立即用清水清洗。如果发生吸入，请立即就医。
请确保交流电型号的电源线插头及电瓶型号的充电器电源线插头及插座必须正确连接地及使用保护开关进行保护
保证机器标牌上的各项电气参数（电压、频率、功率）与供应电源标配一致。交流电式的机器配备有三线的电缆和一个三脚插头。接地线是黄绿色的，只可以插到地线插口。
必须根据电瓶制造商的指引及当地的法律使用电瓶，电瓶表面必须保持干净及干燥，以防止表面泄漏。　电瓶必须远离金属粉尘。
不要遗留任何工具在电瓶上方，会容易引起电瓶短路及爆炸。
当使用酸性电瓶时，必须严格遵守安全指引。
使用电缆式机器时，不可辗破或者拖拉电源线。定期检查电源线有无破损。如有破损时，不可使用机器。
机器在高磁场的地方工作，会容易导致电子控制系统失效。
严禁用高压水枪直接喷洗机器。
机器工作时候回收的污水、清洁剂等等，请根据当地法例处理。
如果机器操作时，发生任何故障失去控制，请立刻关闭机器（拔下主电源），然后立刻尽快联系厂方技术人员。
所有的维修工作必须先断开机器的电源连接后，在平整的地方进行（如果是电缆式机器则拔掉电源插座，如果是电瓶式机器则断开电瓶连接）。
所有电路部分及所有维护操作必须由经过认证的技术人员进行。
更换电缆、插头或者接线头时，必须保证控制面板里的电线和电缆头连接紧固，然后才装回控制面板，以保证操作者的安全。
本机器只能使用原厂提供的附件及零配件，以确保机器的安全及运行。严禁使用从其他机器上卸下的零配件。
本机器的设计使用寿命为10年，使用期后，无论机器是否继续使用，必须根据当地的法规对机器进行报废处理：

- 机器必须断开所有电源，排出所有液体及清洁剂;
- 本机器的报废分类于WEEE（电子电器废弃物），符合新的环境保护规则(2002/96/CE WEEE)。必须区别于普通物件，遵照当地的相关法律和标准进行单独报废。

特殊废物. 须与日常垃圾分隔处理.

或者可以将机器送返制造商进行翻新处理。
如果机器不再使用，建议将废旧电瓶送到经过认证的处理中心进行处理。

你必须确保所有有害的部件安全处理，防止儿童接触。

5. 操控及安装

5.1. 机器（含包装）的运输及升降

☝ 重要提示

在进行升降操作时，必须确保机器安全固定，避免机器发生意外翻侧或者跌落。
使用叉车运输机器时，必须保证在光线充足的环境下进行。

机器出厂时由制造商固定好在木底板上，必须使用适当的设备（参阅 EC Directive 89/392 指引及附加文件）装载到运输车辆上。到达目的地点后，必须使用同样符合指引的机器装卸。.
机器的吸水扒使用塑料保护膜包装。
使用叉车搬运机器时，必须连同包装一起操作。操作过程中，要小心避免机器碰撞和翻侧。

5.2. 机器运输的检查

运输途中请检查机器和包装有否损坏。如果发现机器发生任何损坏，请告知运输者，同时填写索赔申请。

5.3. 包装拆卸

☝ 重要提示

机器拆包时，操作人员必须配备必要的工具（手套、护目镜等），以最大限度预防意外事故的发生。

请跟随以下步骤取出机器：

- 使用剪刀及钳子剪开外包装的塑料胶带
- 移开纸箱
- 根据不同的机器型号，卸下木底板上用于固定机器的金属支架
- 拆开放在电瓶箱内的密封胶袋，并检查以下物品是否齐全
  - 操作手册
  - 质保卡
  - 电瓶连接线x1（电瓶机型）
  - 充电器连接器 x 1（电瓶机型）
  - 备用保险管
  - 启动钥匙 x 2

i 信息

请将两条钥匙中的一条保存在适当的场所作为备用。

- 取决于不同的型号，从地台板上卸下固定机器的支架或者塑料带
- 剪开固定底架的塑料带
- 使用斜坡板将机器从木板上推下来。
- 从包装盒中取出刷子（图. 3, 位置1）及吸水扒(图. 3, 位置 2)

- 根据相关的安全规则清洗机器外表。
- 取出机器后，请根据相关章节安装电瓶（电瓶机型）或连接电源线（拖线机型）

如果可能，请保管好拆下来的包装材料，以便机器需要再次运输或需要送到维护中心检修时保护机器。

如果需要掉弃包装物料，请根据当地法律进行处理。

！ 危险

必须严格遵守以上指引，否则可能引致意外的伤害及危险，而且会导致失去机器保修的权利.

5.4. 电源线连接及安全接地（拖线机型）

在机器标签上，注明了机器运行时需要的电压及频率，请确保机器使用相同的电压及频率的电源。

机器标签上注明230V，表示机器可在220-240V电压下工作；机器标签上注明115V，表示机器可在110-120V 电压下工作；电源频率必须符合标签上的标准。

☝ 警告

请确保电源线需正确接地，同时也需确保用于连接的插座或者电源适配器需正确接地

！ 危险

没有遵照本手册的指引可能导致对人员或者物体的严重伤害，同时机器也会失去制造商的质量保证。

5.5. 电瓶安装（电瓶机型）

本机器可能会配置两种电瓶：

- **湿电瓶：** 该类型电瓶需要定期维护，检查电解液的水位，如果电解液不足，请使用蒸馏水添加到足够的水平（浸过极板 5mm）。
- **AGM / 胶体电瓶：** 该类型电瓶属于免维护类型.

电瓶的参数必须符合机器技术规格中的范围，如果使用过重的电瓶，会导致机器操控不灵活及发生危险，也会导致电机过载。如果配置容量过小的电瓶，会使机器充电的频率增加. 电瓶必须经常保持充电，保持表面干燥及清洁，连接线必须确保连接完好。

i 信息

请根据以下指引，根据使用电瓶的类型去设定机器.

电瓶型号: 电瓶类型设置的跳线开关位于控制面板背后（图. 14），请根据所选用电瓶的类型，移动跳线作出适合的设定（ACID湿电瓶 /GEL 免维护电瓶）。

5.5.1. 电瓶: 预备事项

！ 危险

在安装或者进行任何维护电瓶的期间，操作人员必须准备必要的装备(例如：手套、护目镜、防护衣……等）；为了防止事故的风险，请保持远离火焰，预防短接电瓶的电极，预

防产生火花和严禁吸烟。

正常情况下，随机提供的电瓶是加好了酸性电解液的，随时可以使用的；如果提供的电瓶是没有加水的电瓶（没有添加酸性电解液），安装电瓶到机器前，必须按照以下步骤进行：

- 打开电瓶小盖，给每个电瓶单元加入酸性电解液（密度在1.27至1.29千克之间 25°C）务必确定金属板完全被溶液浸没；
- 闲置4-5小时，使酸性电解液与电极板充分反应；
- 检查溶液的水平线是否仍然在金属板之上；如果不是，把溶液加满到水平线；
- 盖好电瓶盖；
- 将电瓶安装好在机器上（根据下面的指引）。

在首次使用机器前，请先根据以下步骤对电瓶进行充电.

5.5.2. 电瓶: 安装及连接

！ 危险

检查控制面板上钥匙开关处于 "0" (关闭) 位置.
请确保电瓶线连接标线标有 "+"终端连接到电瓶的正极上，在有火花的环境下严禁检查电瓶.
请小心根据以下步骤进行操作，电瓶短路会导致发生爆炸.

1) 请确保两个水箱的水排空（如果需要，请根据有关的章节排水）.
2) 拉开固定污水箱(图. 2, 位置. 2)的固定把手，污水箱从清水箱（(图. 2, 位置. 7)上解锁。
3) 向后翻起清水箱并旋转至 90°. 露出电瓶箱.

☝重要提示

打开清水箱前，请确保污水箱内的污水已经排空；并且急停开关已被按下.

4) 将电瓶放置在电瓶箱中.

☝重要提示

请确保安装电瓶的重量必须适合你的机器使用。正极和负极的接头的直径是不同的。

5) 将电瓶连接线根据接线图, 拧紧螺母并涂上凡士林. .
6) 将清水箱放置到正常的工作位置，并确保锁紧扣安装到位;
7) 请根据以下指引，使用机器.

5.5.3. 电瓶： 卸装

！ 危险

在安装或者进行任何维护电瓶的期间，操作人员必须准备必要的装备(例如：手套、护目镜、防护衣……等）；为了防止事故的风险，请保持远离火焰，预防短接电瓶的电极，预防产生火花和严禁吸烟。检查控制面板上所有的开关处于 "0" (关闭) 位置.
请确保电瓶线连接标线标有 "+"终端连接到电瓶的正极上，在有火花的环境下严禁检查电瓶：

- 从电瓶接线柱上断开电源线.
- 如有需要，请将电瓶移离机器.

- 向上取出电瓶前，请使用适当的工具.

5.6. 电瓶充电器

☝ 重要提示

禁止将电瓶过度放电，这样会导致电瓶永久损坏.

☝ 重要提示

进行充电器，确保急停开关已被按下.

5.6.1. 电瓶充电器的选择

请确保电瓶充电器与所安装的电瓶相匹配:

– **加水铅酸电瓶：** 建议使用 24V-15A 的自动充电器，或者根据充电器制造商的手册去选择合适的充电器.
– **AGM / 胶体电瓶：** 建议使用专用的充电器.

5.6.2. 充电器的准备

如果你使用的充电器不是随机提供的，你必须使用随机提供的连接头去安装在充电器上.
请根据以下步骤安装连接头:

- 从充电器的电瓶连接线（红线和黑线）分别去掉大约 13 mm 的保护层;
- 将电线插入到连接器的接线柱中，然后用钳子夹紧;
- 将接线柱按照极性(红线 + 黑线 -) 安装到连接头.

5.7. 机器的运输及升降

☝ 重要提示

所有的操作必须在光线充足的环境下进行，而且必须依照所有的安全指引。
操作员必须穿戴安全保护衣物.

要将机器包装后运输，请根据以下步骤进行:

- 排清两个水箱的水;
- 卸下吸水扒及刷子 (或者百洁垫);
- 卸下电瓶;
- 将机器放置在木底板上，用金属支架及包装带固定;
- 使用叉车将木底板（含机器）装载到运输工具上;
- 使用安全带将机器及木底板固定好在运输工具上.

6. 使用者操作指引

6.1. 操控 – 描述

有关机器的操控及指示灯（图. 6）

- **电源提示灯**（图. 6,位置 .2－*拖线式机型*）：灯亮表示机器主电源线已连接好。
- **电量提示灯**（图. 6,位置.2－*电瓶式及电动自走型号*）：由3色指示灯便是，表示电量状况。
  a) 一个红灯+一个黄灯+一个绿灯亮起：电量50％-100％

b) 一个红灯+一个黄灯亮起：电量18％-50％
c) 一个红灯闪烁：电量不足，在10秒内机器会停止所有功能

- **主钥匙开关** (图. 6, 位置. 1 ***电瓶及拖线型号***): 机器所有电源及功能的开关及安全装置.
- **紧急/钥匙开关**(图. 6, ref. 1 ***BT 电动自走型号***): 机器所有电源及功能的开关及安全装置，按下时停止机器的所有电源.
- **刷子开关**（图. 6,位置.3）：启动/关闭机器清洗功能
- **水量调节拉杆**（图.6,位置.7）：放水开关，控制水流量。向上推即可加大水流量，反之减小
- **刷子/驱动按钮拉杆**（图. 6,位置.8）：启动机器行走功能并启动刷子转动
- **吸水扒手柄**（图.7,位置.5）：升起/放下吸水扒，同时也启动/关闭吸水系统。
- **计时器** (图. 6 位置. 2): 显示机器累计工作时间.
- **机器行走方向调节旋钮** (图. 4, 位置. 2): 调整机器行走的角度，让机器行走是能够保持直线。
- **刷盘升降踏板**（图.6,位置.10）：位于机器左下方，用于控制刷盘升降。
- **清水箱水量指示灯**(图. 6,位置.4)：灯亮表示清水箱水量不足，刷子电机将在30秒内自动切断电源。
- **污水箱水量指示灯**(图. 6,位置.5)：灯亮表示污水箱水满，吸水电机会在几秒内自动关闭。
- **错误指示灯(**图. 6, ref. 14 -***仅限 BT 电动自走型号***)：如果驱动器发生中断，错误码会显示在 LED 显示灯上（详见第十章），如果机器工作正常，LED 显示灯会保持亮起。
- **速度调节器** (图. 6 位置. 12 – ***仅限BT电动自走型号***): 调节机器前后行走的速度
- **机器行走方向换挡开关**(图. 6, ref. 13 - ***仅限BT电动自走型号***): 设定机器前进/后退行走方向

6.2. 吸水扒的安装与调节

机器的吸水扒（图.2 ,位置. 6），用于吸干地面的污水。
请跟随以下步骤安装吸水扒：
1) 使用主钥匙开关(图. 6, 位置. 1)停止机器
2) 请检查吸水扒安装支架(图. 7, 位置. 2)处于升起状态,如否，请用吸水扒手柄(图. 7, 位置. 5)升起
3) 将吸水管 (图. 7, 位置. 4) 完全插入到吸水扒中;
4) 旋松两个固定把手(图. 7, 位置. 3);
5) 将吸水扒安装到支架(图. 7, 位置. 2)上
6) 拧紧两个固定把手 (图. 7, 位置. 3)

吸水扒上的吸水胶条能够刮掉地面上的水和清洁剂。为使吸水效果更完美，经过一段时间，长期的与地面的摩擦会使胶条的边沿变钝和变得裂开，影响吸水的效果，因此需要更换吸水扒的胶条。必须经常检查吸水扒胶条。
为了获得优秀的吸水效果,吸水扒的后胶条在工作期间与地面保持大约 45° . 可以调节两个吸水扒小轮(图. 7, 位置. 1)的高度去调整吸水扒的压力.

6.3. 机器不在工作状态时的移动

根据以下步骤，移动机器：
1）升起吸水扒
2）使用刷子升降踏板升起刷子。
3）移动机器：

- ***机械行走型号（B和C型号）：*** 推动机器行走;
- ***电动自走型号（BT型号）：*** 通过机器行走方向换挡开关 (图. 6, 位置. 13 选择)所需行走的方向，再按下刷子/驱动按钮(图.6, 位置. 8)，机器开始移动; 通过速度调节器(图. 6, 位置. 12),调节机器行走的速度。

4）当到达目的地，释放刷子/驱动按钮，机器停止移动.

6.4. 刷子（针座）装卸

☝ 重要信息

严禁机器在没有安装刷子或针座的情况下工作.

装刷：使用刷盘升降踏板升起刷盘，将刷子放到刷盘中央，然后放下刷盘，启动刷子开关(图.6, 位置. 3)，提起驱动拉杆(图.6, 位置. 8)，刷子转动，完成装刷程序。如果刷子未能装卸成功，请重新调整刷子位置，重复上述操作。

卸刷：升起刷盘，启动刷子开关(图.6, 位置. 3)，提起驱动拉杆(图.6, 位置. 8)保持1－2秒，刷子转动，然后松开驱动拉杆，刷子自动脱落。

6.5. 清洁剂的使用

☝ 重要信息

请根据生产商指示稀释清洁剂，不要使用漂白水及氧化剂（特别是高浓缩类型），不要使用熔剂及碳氢化合物，清洁剂的使用温度不能超过规定的范围，不能还有沙子及杂质。

本机器只能使用低泡沫的专门为洗地机设计的清洁剂.
请联系制造商，以获得最新及全部的清洁剂资讯.
请根据地面及污垢状况选择合适的清洁剂.
请根据相关的安全手则使用清洁剂。

6.6. 工作前准备

☝ 重要提示

机器开始工作前，请根据工作环境穿戴防护衣、帽、防滑靴等等，同时根据清洁剂供应商的建议佩戴面罩保护呼吸系统

工作前请根据以下步骤检查机器：

- ***电瓶式机器：*** 检查电瓶电量，如果电量不足，请先充电。
- 使用刷盘升降踏板(图.6, 位置. 10)放下刷盘。
- 检查污水箱(图.2, 位置. 2)是否排空。如果有污水，请排清污水。
- 通过加水口往清水箱 (图.2, 位置. 7) 加入清水及按比例加入低泡清洁剂. 水量不要过满，水量离入水口保持 5 cm 以上;
- 根据地面环境选择并安装合适的刷子及百洁垫.
- 请确保吸水扒 (图. 2, 位置. 6) 与吸水管正确连接(图. 7, 位置. 4). 以及吸水胶条状态良好.

i 信息

如果操作人员是第一次使用机器，请在较宽阔的空间进行培训使用机器，
请每次往清水箱加水前，排清污水箱污水。

为了能达到最好的清洗效果及使机器获得最长的使用寿命，请根据以下简单规则使用机器：

- 请先整理好工作区域，然后尽可能离开阻碍物。
- 请尽量在人员较少的时间进行工作，以免地面再次收到污染。
- 清洁时机器尽量直线运行
- 将要清洗的大范围区域，可将区域划分成若干个矩形区域分开清洗.

如果需要，请使用拖把或者抹布用于清洗角落的地方.

6.7. 机器的工作

机器经过设置后，请跟随以下步骤启动机器：

- 连接电源：
  - 拖线式机型：插上电源线
- 插入启动钥匙，将钥匙开关 (图. 6, 位置. 1，B 和 C 型号) 或者将紧急开关(图. 6, 位置. 1，BT 型号)拧到 "ON" 位置，启动机器所有功能：电量指示灯亮起。
- 向上拨动水量调节杆(图. 7,位置.5)，将水流量调整到合适位置。
- 使用吸水扒手柄(图. 6,位置7)将吸水扒放下，吸水电机自动启动。
- ***机械自走型号:*** 按下刷子开关 (图. 6, 位置. 3) ，对应指示灯亮起, 启动刷子系统功能;
- ***电动自走型号:*** 按下刷子开关 (图. 6, 位置. 3) ，对应指示灯亮起, 启动刷子系统功能;
- 提起刷子/驱动拉杆(图. 6, 位置. 8);
- ***机械自走型号:*** 当提起刷子/驱动拉杆(图. 6, 位置. 8)，刷子电机启动，机器开始向前行走，机器开始工作，机器由于特殊的设计，刷子和地面的摩擦力使机器向前行走。要停止工作，松开驱动拉杆，刷子停止转动。
  如果机器行走过程中不能保持直线行走，可以使用**机器行走方向调节旋钮** (图. 4, 位置. 2)调整机器行走角度。如果机器向右跑偏，可以顺时针调节旋钮，进行修正。
- ***电动自走型号:*** 机器的前后移动，请参阅章节6.3

所有型号：

- 请经常查看刷子的清洁剂及水量是否合适，当清水箱水量不足时，指示灯（图.6,位置4）会亮起，刷子电机会在30秒内停止工作，进入保护状态，请停止机器运行，重新加水，同时排清污水箱内污水。
- 工作时请注意清洗效果，请使用水量调节杆(图. 6,位置.7)适度增加或者减少水流量。

☝ 重要提示

严禁在机器启动后，离开机器。

- 如果污水箱水满后，指示灯（图. 6,位置5）会亮起，4秒后吸水电机会自动关闭，停止机器运行，排清污水，重新启动吸水电机。
- ***电瓶式机器***: 如果电量指示灯（图. 6,位置2）闪亮，表示电量不足，几秒后机器会自动停止运行，保护电瓶。

☝ 重要提示

为了防止发生损坏地面磨损，请避免机器在原地不动时使用刷子。

结束工作：

- 将水量调节拉杆（图.6,位置.7）向下拉到关闭位置
- 释放手柄上的刷子/驱动按钮(图. 6,位置. 8)，机器停止运行
- 关闭主功能/刷子安装开关 (图. 6, 位置. 3) (灯灭)，刷盘自动升起;
- 使用吸水扒手柄(图. 6, 位置. 9) 升起吸水扒，以免由于持续的压力导致吸水扒刮条损坏;吸水系统关闭。
- 卸下刷子或针座
- 将污水箱的污水排清.

- 将钥匙开关 (图. 6, 位置. 1) 拧到 "OFF" 位置.

6.8. 清洗建议

如果地面上有顽固的污垢，可以将机器的洗地和吸水功能分开使用。

6.8.1. 预洗

- 打开放水开关
- 打开刷子主开关
- 放下刷盘
- 提起驱动拉杆，启动刷子。
- 升起吸水扒
- 开始清洗工作

调节清水及清洁剂的水量, 水量的调节必须取决于操作者的工作速度，工作速度越慢，所需的水量越少。
当需要清洗顽固污渍时，请给予清洁剂和污垢有充分时间进行化学反应，并用刷子进行清洗，用这个方法清洗，可以使清洁剂能够充分渗透到污渍，达到最佳的清洁效果。

6.8.2. 吸干

完成预洗程序后，放下吸水扒，启动吸水系统，再次清洗地面的同时，吸干地面污水。用这个方法进行彻底清洗，可以有效缩短以后的日常清洗时间。
如果需要洗地/吸水同时进行，请同时启动洗地，放水，吸水系统。.

6.9. 污水排放

☝ 重要提示

每次需要想清水箱加水前，请先排出污水箱的污水.

！ 危险

操作人员请穿戴合适的保护衣物.
排放污水时，请断开电源

污水排放管位置在机器的左后方。
排放污水：

- 将机器移动到污水排放处
- 将污水管（图. 8,位置.2）从固定座(图.8,位置.3)水平拨出，并将污水管保持在与固定座的水平位置。
- 保持污水管高度，拧松污水管管塞（图.8,位置.2）
- 慢慢将污水管发下到排水处，注意污水溅出。
- 检查污水箱内部，清洗污水箱内壁。
- 当污水排清后，将污水箱回复到原位(如果污水箱翻开)，
- 将管塞重新安装到污水管，拧紧管塞螺帽，将污水管放回固定座。

☝ 重要提示

当清洗污水箱时，不要将吸水电机过滤器取出（图.10，2），不要将水直接射到过滤器安装位置。

6.10. 清水排放

！ 危险

操作人员请穿戴合适的保护衣物.
排放清水时，请断开电源

排放清水时，请断开电源
排放清水：
- 将机器推到污水排放处
- 拧开清水排放盖（图.9,位置.1）
- 清水排放完毕后，重新装上排放盖，注意检查排放盖是否安装完好。

7. 机器长时间停止运行

如果机器在一个长的周期内没有使用，必须把吸水扒及刷子（针座）拆卸下来，将机器和配件清洗干净及存放在干燥的地方（配件最好使用密封的塑料容器储存）。
此外，请确保排清水箱内的污水及保持水箱内部清洁。
电瓶机型：机器长时间停止使用前，请对电瓶进行一次完全的充电，然后再进行存放。在存放期间，需要至少每1个月进行一次充电，以防止电瓶损坏。

☝ 重要提示

如果不对电瓶进行周期性充电，将会导致电瓶永久性损坏。

8. 电瓶的维护与充电

！ 危险

在安装或者维护任何类型的电瓶的期间，操作人员必须准备必要的装备(例如：手套、护目镜、防护衣……等）；为了防止事故的风险，请保持远离火焰，不要短接电瓶的电极，不要产生火花和不要吸烟，请在通风的环境进行充电操作。

为了避免电瓶发生不可恢复的损坏，请不要让电量彻底耗尽。
机器电量指示灯（图. 6,位置1）闪亮时，请立即对电瓶充电。

8.1. 充电程序

- 按下急停开关(图.6, 位置.1)，停止机器所有功能。
- 如果机器配置了内置充电器，请将充电器电源线连接到内置充电器
- 如果机器没有配置内置充电器，请将外置充电器的充电接头连接到机器端的充电插座(图.4,位置.1)。.

☝重要提示

充电过程中，请不要让电解液温度超过 45°C.

☝重要提示

如果使用胶体电瓶，请使用专用充电器。

- 根据充电器说明书的指引进行充电程序;
- 充电完成后，请断开充电器电源线之前关闭充电器电源（外置充电器）;如果你使用的内置充电器，请断开充电器电源线。

9. 机器维护指导

！危险

在进行任何维护前，请务必断开机器主电源。
所有有关电器部分的保养维护，必须由经过认证及培训的专业人员进行，并必须遵守安全规则及说明书的指引。

9.1. 维护 – 概述

依照制造商的指引进行常规维护有利于机器获得最佳的使用性能及延长机器寿命
每次清洁机器请跟随以下步骤：

- 不要使用喷水装置，喷水装置会容易让水进入到电路板及电机，引致发生短路或机器损坏;
- 不要使用蒸汽清洗机器，会导致塑料产生变形;
- 不要使用熔剂及碳氢化合物，会导致橡胶部分损坏.

9.2. 常规维护

9.2.1 吸水电机过滤网及浮球感应器：清洁

- 从污水箱（图. 10,位置.4）上旋出并取下污水箱盖（图. 10,位置.1）
- 排清污水箱污水
- 清洗浮球感应器（图. 10,位置.5）不要用水直接射向浮球。
- 取出过滤网（图. 10,位置.2）并清洗。
- 待过滤网干透后，放回吸气口(图.10,位置.3)。
- 从新将污水箱盖安装到污水箱上。

9.2.2 清水箱过滤器: 清洁

- 从清水箱上取出进水过滤器
- 用水清洗过滤器
- 重新安装过滤器

9.2.3 出水过滤器清洗

- 拧开出水过滤器螺帽（图. 11,位置.1）
- 取出过滤器（图. 11,位置.1）
- 清洗干净过滤器
- 重新安装过滤网，拧紧螺帽

9.2.4 吸水胶条的更换

吸水胶条安装在吸水扒上，用于贴着地面回收污水及清洁剂。使用一段时间后，胶条会因为摩擦而发生磨损，从而影响吸水效果，因此请经常检查胶条状况。

<u>更换吸水胶条</u>

- 使用吸水扒升降把手（图. 7,位置.5）放下吸水扒
- 拧松两个固定把手（图.7,位置.3），从支架（图.7，2）上取下吸水扒（图.2,位置.6）
- 从吸水扒上取下吸水管（图. 7,位置.4）
- 松开固定扣，（图. 12,位置.3和6）
- 取出固定支架(图. 12,位置.2和7)
- 取出胶条
- 可以将胶条四面反复使用，如果已使用四面后，更换新的胶条
- 重新装好固定支架
- 扣紧固定扣

9.2.5 保险丝更换（电瓶式机器）

保险丝用于保护刷子电机及吸水电机，保险丝安装保险盒（图.13，1），位置在污水箱下方。

- 翻起污水箱，如果污水箱有水，请先排清。
- 拧开保险盒的螺帽，拆除损坏的保险丝。
- 安装新的保险丝，重新安装好。
- 将污水箱放回原位。

保险管列表: 请查阅零配件目录，以获得保险管明细资料.

☝ 重要提示

严禁使用安培值不符的保险丝

如果保险丝持续烧毁，表示电机或者线路板可能出现故障，请联系符合资格的技术人员检查机器。

9.3. 周期性维护

9.3.1. 日常维护

每天工作后，请根据以下指引进行维护:

- 排清污水箱污水;
- 清洁并检查吸水扒胶条状况，如有需要，更换之.
- 检查吸水扒的吸风口是否堵塞，如有需要，请清除堵塞物;
- 根据指引对电瓶进行充电.

9.3.2. 每周维护

清洁污水箱浮球感应开关，确保工作正常;

- 清洁吸水电机过滤器并检查有无损坏；如有需要，请更换。
- 清洁位于清水箱前部的过滤网并检查其有无损坏（图.2. 7）;如有需要，请更换。
- 清洁吸水管。
- 清洁清水箱和污水箱。
- 检查电瓶内电解液容量，若容量不足，请加入蒸馏水。

9.3.3. 每半年维护

请合格技术人员检测机器的电路系统。

10. 故障速查及错误代码

10.1. 如何解决可能出现的问题

[B]=电瓶式
[C]=拖线式
[BT]=电瓶+电动自走

可能出现的故障及解决方法

问题	引致原因	解决方案
机器无法运行	[B]=电瓶没有接好	[B]=把电瓶和机器重新接好
	[B]=电量不足	[B]=充电
	[C]=插头松脱	[C]=插上插头
洗地刷无法转动	刷子开关位于“0”位置	把开关转到“1”位置
	没有提起驱动把手	提起驱动把手
	[B]=刷子电机过热停机，电机过载。	[B]=松开驱动把手，将刷子开关切换到“0”，让电机冷却至少45分钟。
	[B]=电机电源接线或过热保护没有连接	[B]=重新连接电源接线或过热保护装置
	[C]=电机电源接线没有连接	[C]=重新连接电源接线
	[B]=刷子电机保险丝烧毁	[B]=检查导致保险丝烧毁的原因，更换保险丝
	[B]=电瓶电量耗尽	[B]=重新给电瓶充电
	清水箱水量不足	重新注入清水
	齿轮箱损坏	更换齿轮箱
	电机损坏	更换电机
刷子电机启动故障（拖线式）	机器刷子是干的或工作在一个十分粗糙的地面上	打开放水开关
	可能是由于外置的电源线有破损或者电压不足	使用适合的电源线及工作电压
	电机损坏	更换电机
机器清洗效果不均匀	刷子或百洁垫已经磨损	更换
没有水从刷盘流出	没有打开放水开关	打开放水开关
	清水箱水量不足	加水
	出水管发生堵塞	清理污水管
	出水过滤器堵塞	清理或更换出水过滤器
	电磁阀损坏	更换
水流不停止	放水球阀损坏	更换
吸水电机不工作	吸水电机开关没有打开	将吸水扒手柄放下
	微动开关失效	检查并更换
	吸水电机电源线没有连接好或吸水电机损坏	检查吸水电机电源连接，如果电机损坏，更换
	[B]=保险丝烧毁	[B]=检查导致保险丝烧毁的原因，更换保险丝
	污水箱已满	排放污水
吸水效果不佳	吸水胶条已经磨损	更换之
	吸水管或者吸风口堵塞或者	取出堵塞物或者更换吸水

	损坏	管
	浮球感应开关失效或者水满	排空污水箱或者更换浮球开关
	吸水管堵塞	取出堵塞物
	吸水管没有连接或者吸水管破损	连接或者更换吸水管
	吸水电机没有电源供给或者电机故障	请检查电源连接线是否正确连接，如果属于下一种情况，请更换电机
机器不能直线工作	需要调节刷子压力把手	调节刷子压力把手。
电瓶使用时间比正常情况短	电极及接线终端发生氧化或者脏了	清洁及使用凡士林涂在电极及终端上
	电解液容量不足	添加蒸馏水，根据指引给每个单元格加水
	电瓶充电器工作不正常	查阅充电器说明
	电瓶的单元格损坏	更换电瓶
电瓶正常的充满电，但使用时间很短	电瓶是新的，但不能提供100% 的性能	通常新电瓶需要20－30次的充放，才能达到最好的使用效果
	机器需要持续使用，电瓶容量不足。	更换大容量的电瓶或者使用另外一套充好的电瓶。
	电解液不足，没有完全浸过电极板。	添加蒸馏水，重新充电
电瓶使用时间很短，充电时间很短，而且充电结束后，每个单元格提供正常的电压（大约2.14V）,但使用密度计测试是，显示没有充电	由制造商提供的电源加酸后，在首次充电前及使用前储存时间过长	如果使用普通的充电器没有效果，请尝试重复充电: - 使用充电器慢充10个小时，电流设定为电瓶容量的1/10，正常电瓶的参考安时数以5小时安培数为准，(以100Ah(5) 电瓶为例，充电电流必须设定为10A,使用手动充电器); - 闲置一个小时; - 使用普通充电器重新充电.
充电完成后，电瓶不能提供正常的电压（每个单元格在没有负载的情况下大约2.14 V）但使用密度计测试时，显示没有充电	电瓶没有正确连接到充电器	将电瓶充电器连接线连接到电瓶连接端

10.2. 驱动卡报警代码

驱动器的作用是控制行走电机，垂直安装在机器的前部 (图. C 位置. 6). 如果驱动发生中断，错误码会显示在LED显示灯 (图. A 位置. 16).上，如果机器工作正常，LED显示灯会保持亮起。如果检测到故障发生，LED指示灯会提供两种信息，慢速闪烁 (2 Hz) 或者快速闪烁 (4 Hz) ，显示机器的具体故障信息.
慢速闪烁的信号在故障排除后，会自动取消。快速闪烁的信号(在表中以"*" 表示)表示机器的故障较为严重，故障修复后，必须关闭钥匙开关(图. A 位置. 1)重新启动机器
故障信号提示会在10秒后提示, LED 信号灯会分两段闪烁，直到故障修复.

例： 错误代码 "1,3" 信号灯号显示如下：☼ ☼☼☼ **显示错误代码 1,3**

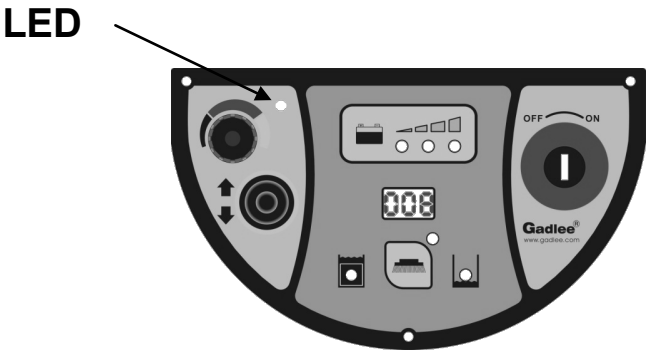

	LED信号		描述
	1, 1	☼ ☼	温度过高> 92°
	1, 2	☼ ☼☼	加速器故障
	1, 3	☼ ☼☼☼	速度调节电位器故障
	1, 4	☼ ☼☼☼☼	超电压故障
	1, 5	☼ ☼☼☼☼☼	低电压故障
	2, 1	☼☼ ☼	主继电器，启动故障
	2, 3	☼☼ ☼☼☼	主继电器，关闭故障
*	3, 1	☼☼☼ ☼	脚踏板电位器故障
	3, 2	☼☼☼ ☼☼	电子制动系统故障
	3, 3	☼☼☼ ☼☼☼	电压过低
	3, 4	☼☼☼ ☼☼☼☼	电子制动系统失效故障
	3, 5	☼☼☼ ☼☼☼☼☼	HPD 故障(脚踏板电位器调节不正确)
*	4, 1	☼☼☼☼ ☼	电机短路
*	4, 2	☼☼☼☼ ☼☼	电机电压不正确/电机内部短路
*	4, 3	☼☼☼☼ ☼☼☼	EEPROM 故障
*	4, 4	☼☼☼☼ ☼☼☼☼	电机短路/EEPROM 出错

Gadlee Green Cleaning Equipment (HK) Co.,Ltd
Gadlee Green Cleaning Equipment Co.,Ltd
1-2/F, Block A, Hantian Industrial Park
Dongping Road , Guicheng,
Nanhai District, Foshan 528200 Guangdong, China
Tel:+86 757 81019199 Fax:+86 757 81019198
Toll-free: 4008-833-830
Http://www.gadlee.com E-mail:gadlee@gadlee.com