STOWAWAY

Tailgates By THIEMAN

LRST-40
OWNERS MANUAL/PARTS LIST

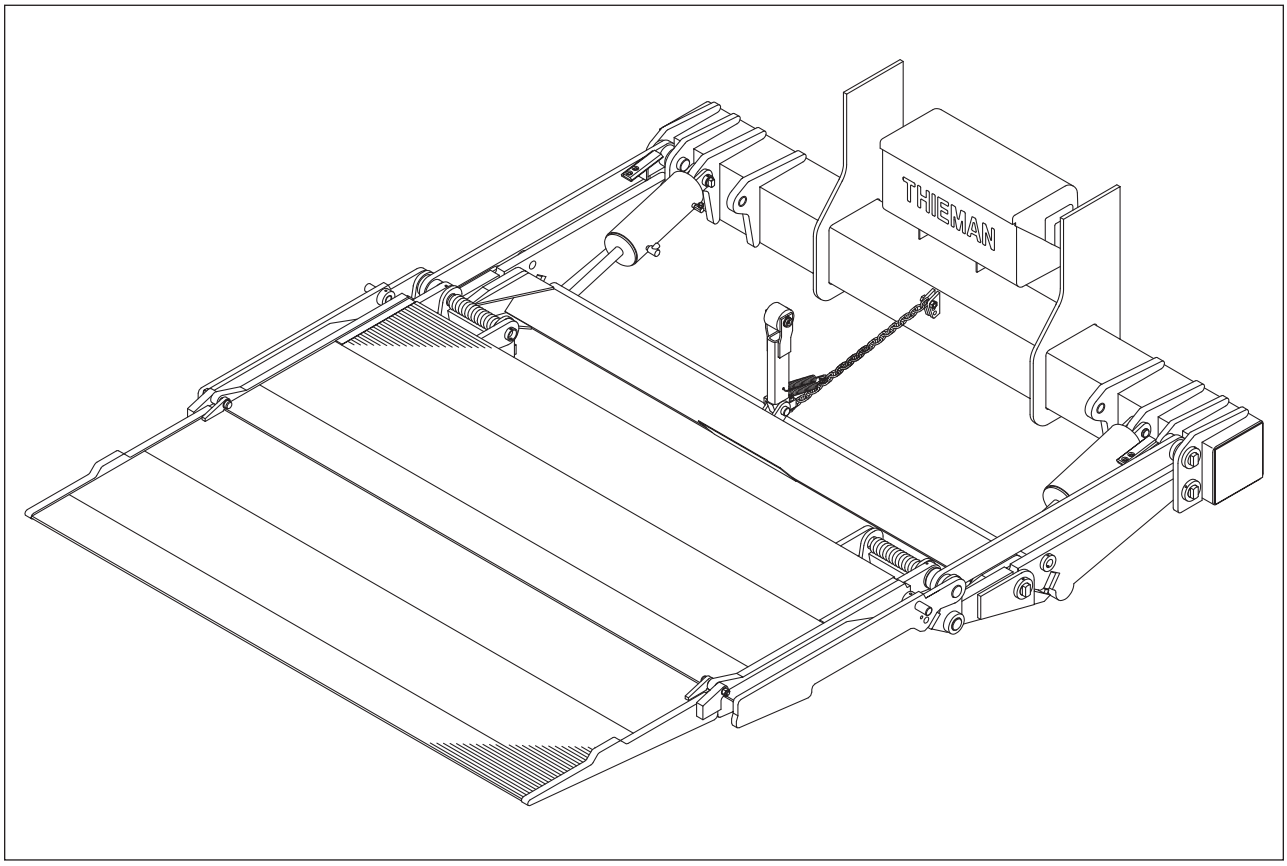

⚠ IMPORTANT! KEEP IN VEHICLE!

PLEASE READ AND UNDERSTAND THE CONTENTS OF THIS MANUAL BEFORE OPERATING THE EQUIPMENT.

THIEMAN
TAILGATES, INC.
600 East Wayne Street
Celina, Ohio 45822
Phone: 419-586-7727 Fax: 419-586-9724

NTEA
THE ASSOCIATION FOR THE WORK TRUCK INDUSTRY
MEMBER

TABLE OF CONTENTS

PARTS ORDERING PROCEDURE 2
OPERATING INSTRUCTIONS 3
WARNINGS 4
MAINTENANCE GUIDE. . . . . 5 & 6
SEMI-ANNUAL INSPECTION 7
INSPECTION AND LOCATION OF DECALS. 8
TRUNNION, LIFT ARM, IDLER ARM, AND OPTIONAL REAR
END PROTECTION 9
PLATFORM - TORSION SPRING ASSIST ASSEMBLY. 10
CART STOP ASSEMBLY-OPTIONAL 11
ELECTRICAL PICTORIAL 12
SPACER ASSEMBLY 12
PUMP ASSEMBLY - TOGGLE AND PUSHBUTTON CONTROL. 13
PUMP PARTS. 14
SNUBBER KIT 15
TROUBLE SHOOTING GUIDE 16-18

FOR YOUR RECORDS

Model No. _____ **Date Purchased** _____

Serial No. _____

NOTE: When ordering parts be sure to include this information!

Your Thieman Tailgate is constructed of top quality material and is warranted to be free from defects in material and workmanship under normal use. With routine maintenance and proper operation this liftgate will provide long lasting service and dependability.

PARTS ORDERING PROCEDURE

When ordering parts, please include all the information asked for below. If this information is not available, a complete written description or sketch of the required part will help Thieman identify and deliver the needed part to you.

THE FOLLOWING INFORMATION MUST BE INCLUDED:

1. Serial Number - Thieman liftgate serial numbers can be found on the tag located on the outside of the curb side mounting plate.
2. Model Number and Capacity.
3. Platform size and Material - Steel or Aluminum.
4. Part number.
5. Description.
6. Quantity required.

OPERATING INSTRUCTIONS

CAUTION

Be sure to operate liftgate at a safe distance and never improperly load platform as this may cause personal injury or damage to the liftgate.

UNFOLDING OF PLATFORM

1. Raise platform by pushing toggle switch up until stow pins on platform are off the spacer latches.
2. Move spacer handle to position 1 to disengage spacer latches.
3. While spacer handle is in position 1 lower the platform by pushing toggle switch down until lift arms hit the ground.
4. Grasp curb side platform handle and rotate platform out to horizontal position. Unfold the extension.

RAISING OF PLATFORM

5. Push switch up to raise platform to bed height. Platform will level first then raise.

LOWERING OF PLATFORM

6. Push switch down to lower platform until platform nose tilts to ground. Arms hit first then platforms tilts.

CLOSING OF PLATFORMS

7. Lower the platform until the arms hit the ground.
8. Fold over extension and grasp platform handle to raise manually past the vertical position, until the platform contacts the kicker.
9. Push switch up to raise completely until stow pins and spacer latches have engaged for stowing. DO NOT LOWER STOW PINS INTO THE SPACER LATCHES.

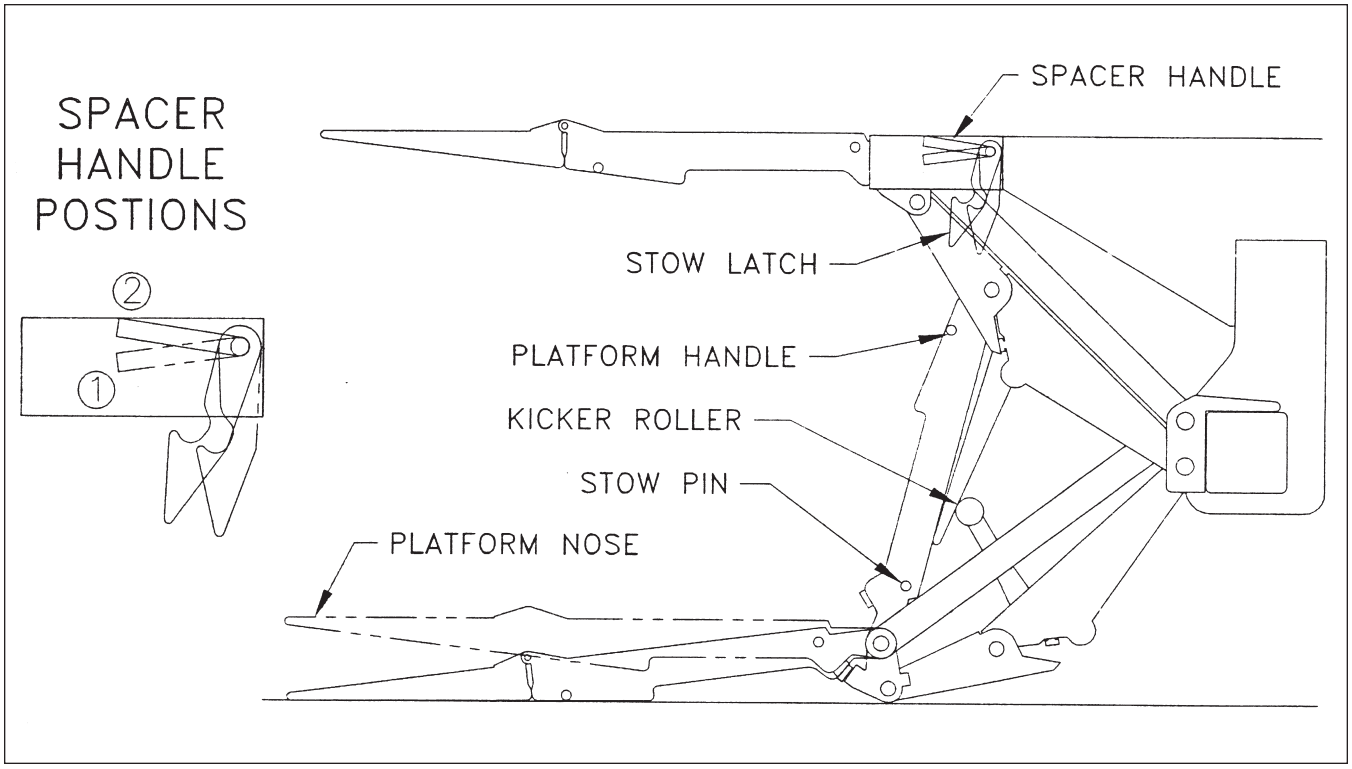

WATER LEVEL LOADING

When a load is to be raised or lowered, this load must be centered from side to side on the load bearing platform. The load should also be closest to the edge of the platform nearest the truck. If a load is not uniformly distributed, then the heaviest portion should be closest to the edge of the platform nearest the truck.

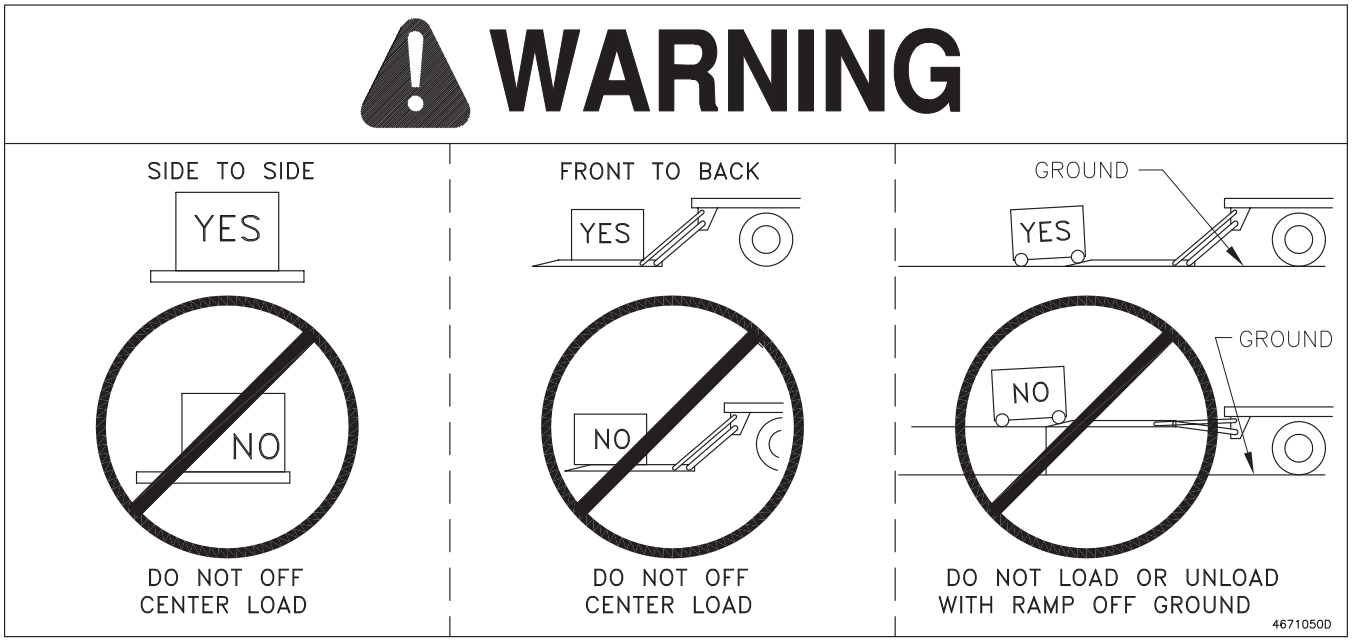

WARNING!

The following list of warnings are to be read before operating the LRST40 series liftgate:

+Read this Owner's Manual and all of the decals on the liftgate BEFORE operating the liftgate.

+All protective covers and guards must be in place before operating the liftgate.

+DO NOT operate the liftgate if you do not have a thorough knowledge and understanding of the operation of the liftgate.

+NEVER OVERLOAD THE LIFTGATE! The maximum rated capacity of the LRST40 series liftgates is 4000 lbs.

+Never use the liftgate if it makes any unusual noises, has vibrations, or fails to operate freely.

+Make certain that the area below the platform is clear before and at all times during the operation of the liftgate.

+Keep hands and feet clear of all pinch points.

+The platform must be in the closed position and the latches properly engaged before transit.

+Always load as close to the center of the platform and as close to the vehicle as possible. See figure 1.

+Never operate lift trucks on or over any part of the platform.

+Load and unload the platform from the rear and not from the side of the platform.

+Only operate liftgate when vehicle is on level ground and parking brake is set.

+Follow the maintenance guide as outlined in this manual.

+DO NOT attempt any repairs unless you are qualified to do so.

+If any repairs, adjustments, or maintenance not covered in this manual are required, contact your nearest Thieman distributor or the factory.

+DO NOT ride the liftgate, it is not intended as a personnel lift.

+This liftgate is intended for the use of loading and unloading cargo only, and is not to be used for anything other than this.

+DO NOT modify this liftgate. Altering this liftgate may cause serious personal injury or damage the liftgate and will void all warranties.

THERMAL DATA: To avoid overheating the motor do not operate this unit for more than 5 cycles/10 minutes with the maximum load. The motor then must be allowed to completely cool down to ambient temperature before cycling the lift again. This unit also has a 10% duty cycle, which means the liftgate can be cycled no more than 2 cycles/10 minutes constantly with the maximum load.

MAINTENANCE GUIDE

The following inspection and maintenance operations should be performed at the recommended intervals or anytime the liftgate shows signs of abuse, and improper or abnormal operation.

MONTHLY INSPECTION AND MAINTENANCE

Operate the liftgate throughout its entire operational cycle and check the following:

1. Check that there are no unusual noises or vibrations.
2. Check that when the truck is on level ground and the platform is in its “leveled” and unloaded position that the entire load surface is leveled or toed up at the ramp tip so that when the usual load is placed on it, it becomes leveled under load. For instructions on adjusting leveling screw and platform toe see figure 2.
3. Check platform height relative to the spacer. If platform is lower, adjust cylinder with a 13/16 wrench to obtain necessary height.
4. Check for apparent damage to the liftgate such as bent or distorted members, any cracked welds, which may have resulted from overloading or abuse.
5. Check for any excessive wear in the following areas:
   A. Platform hinge pins and bushings
   B. All cylinder pins and bolts and bushings
   C. If the gap between pin and bushing exceeds 1/32 of an inch, the bushing should be replaced.
6. Check that all platform pivot pins are in place and retained by their proper retainers.
7. Check that all protective covers and guards are properly in place and secured.
8. Check painted finish, if in poor condition, then repaint. Any rusted parts should be replaced.
9. Check condition of non-painted parts, replace if corrosion exists.
10. Check snubbers, while platform is in stored position, to make sure they are bearing down on platform. If not, they should be replaced.
11. Check for oil leaks in these areas:
    A. Lift Cylinder
    B. Hydraulic hose - replace if it shows signs of wear or cracking.
    C. Hydraulic fittings - tighten or replace as may be required to stop leakage.

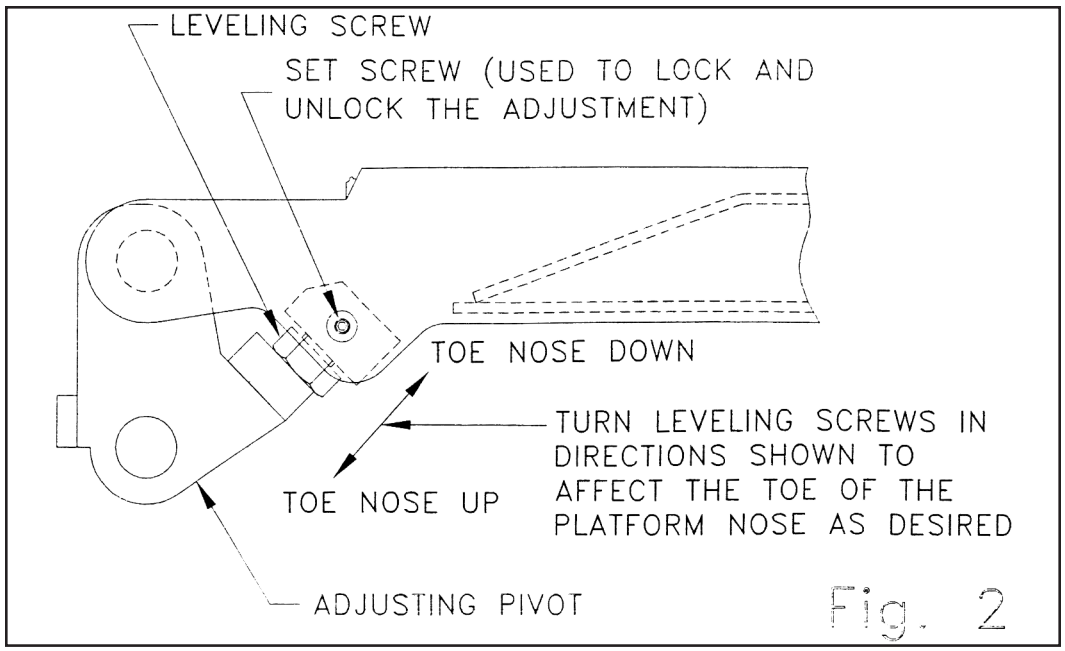

Fig. 2

12. Check the oil level in the hydraulic reservoir. With the liftgate in the stowed position, the oil should be within 1/2 inch from the top of the reservoir. See chart below for oil applications.

13. Check that all wiring and battery cable connections are tight and free of corrosion.

14. Lubrication of the LRST 40 series liftgate should be as follows for all user conditions:

Area of Tailgate	Type of Lubrication	Frequency
Spacer Latches	SAE 10 to SAE 20 oil	50 cycles
Pump Oil Change	See Chart Below	Yearly

*The pivot points of the LRST 40 have special bushings which do not require lubrication.

HYDRAULIC FLUID CHART	
Temperature Range	Acceptable Fluids
-75 to 165° F	Exxon Univis J-26
-20 to 130° F	Dexron III Exxon Superflo ATF Shell Donax TG
-50 to 80° F	Shell Aero Fluid 4 Mobil Aero HFA Exxon Univis J-13 MIL H-5606

15. Check the pump relief pressure and also the motor amperage at this pressure. These values should be as follows:

Model	Max Amp Draw	Relief Pressure (psi)
LRST 40	255	2650

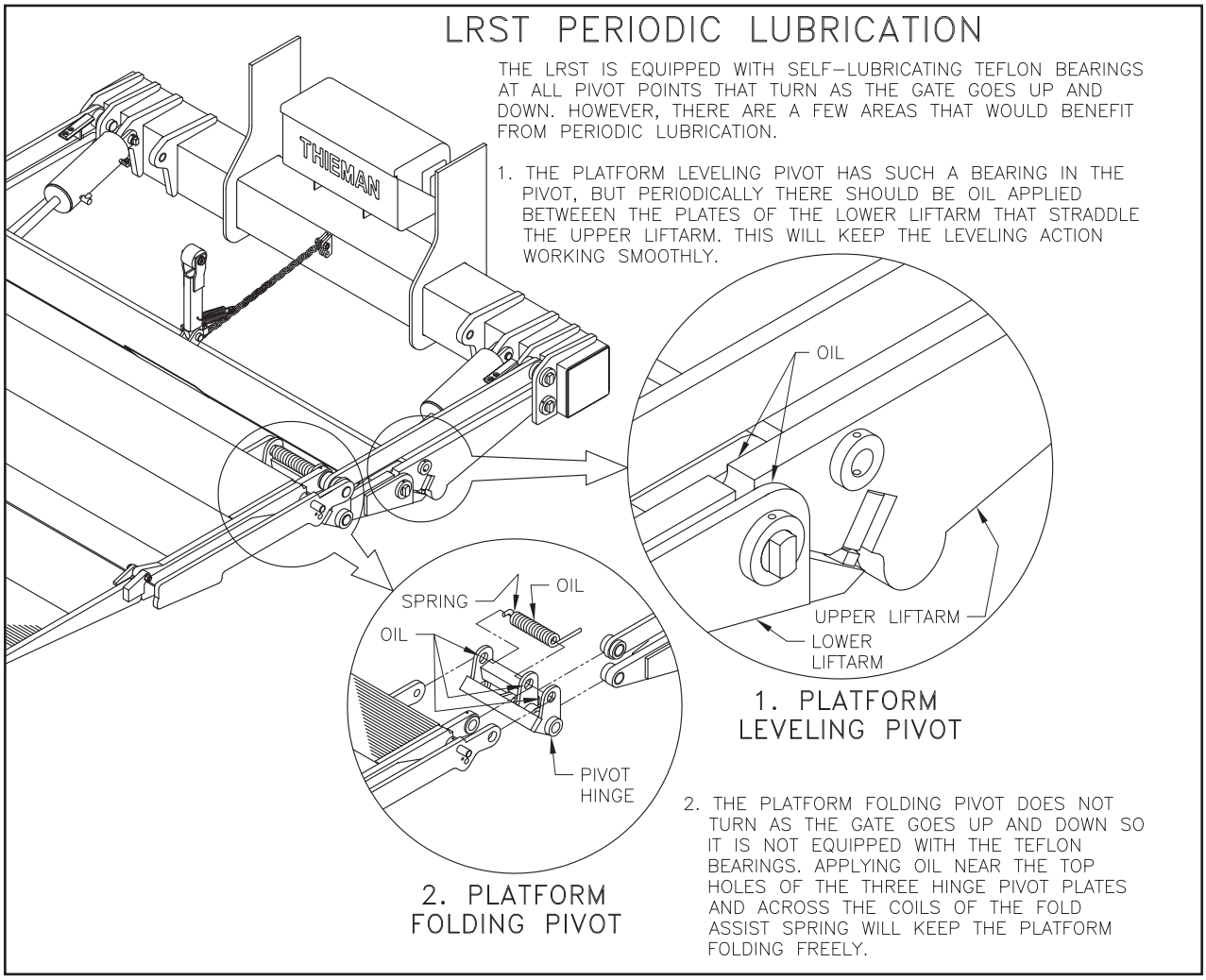

SEMI-ANNUAL INSPECTION

1. Perform the procedures outlined in the “Monthly Inspection and Maintenance.”
2. Repaint original painted components as necessary to prevent rust and corrosion from reducing structural integrity of original components.
3. Perform the procedures outlined in the “Monthly Inspection and Maintenance.”
   A. Disconnecting battery cable
   B. Remove motor end cover
   C. Examine the armature brushes for wear. (Brushes should be replaced if they are less than 1/8” long).
   D. Clean all residue out from inside of the motor housing.
   E. Apply several drops of light weight machine oil to the armature shaft bearing in the motor end cover and reassemble the motor end cover.
4. If the hydraulic oil in the reservoir is dirty:
   A. Unfold platform and lower platform to the ground. Raise platform to bed height so cylinders are fully retracted. Support platform in this position with a lift truck or crane.
   B. Drain the oil from the hydraulic system and flush the entire system.
   C. Remove reservoir from pump and clean suction line filter. Also, clean out any contaminants inside reservoir. Remount reservoir when completed.
   D. Replace the oil as outlined in Section 9 under Monthly Maintenance and Inspection.

INSPECTION AND LOCATION OF DECALS

Item	Part Name	Part Number
1	Warning Decal-Off Center	4671050
2	PTO Decal	4650140
2	Fast Idle Decal	4650150
3	No Riding Decal	4609
4	Operating Decal	4669
5	Capacity Decal 4000#	4650130
6	Warning Decal	4604
7	Warning Decal	4650530
8	Caution Decal	4650770
9	Handle Decal	4605
10	Warning Decal-High Pressure	4620
11	Wiring Decal	4614
12	Reflector (3)	5705

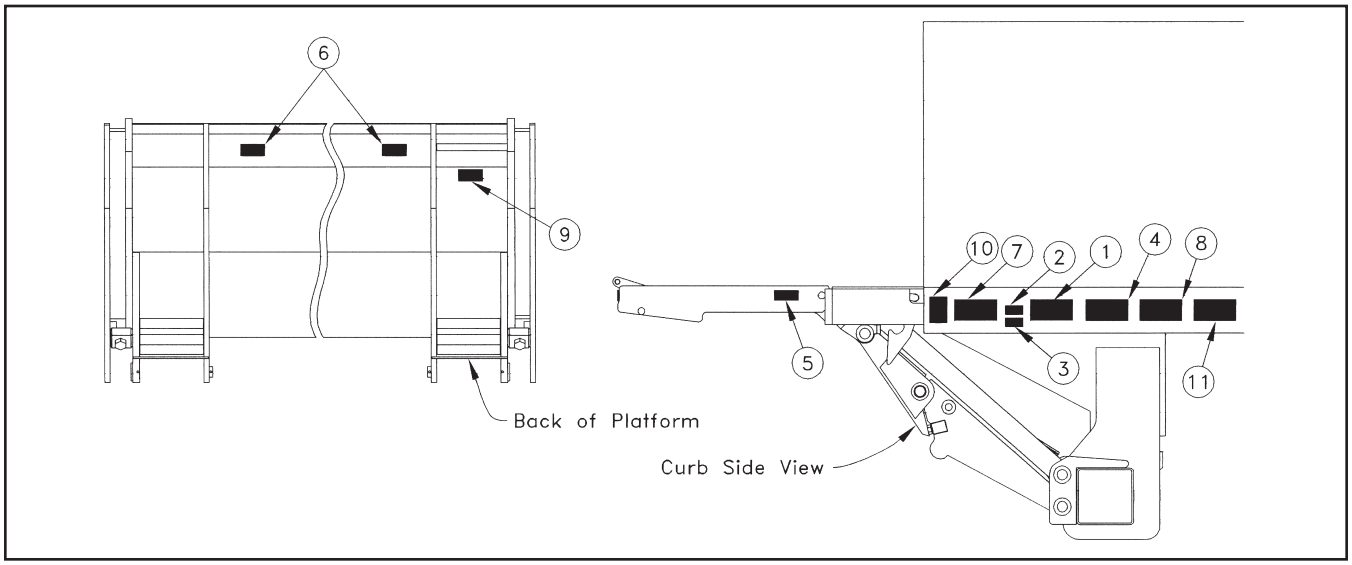

TRUNNION, LIFT ARM, IDLER ARM, AND *OPTIONAL REAR END PROTECTION ASSEMBLY

Item	Part Number	Description	Qty.
1	31411	Trunnion asm - Includes item 21	1
2	31410	Lift arm asm - Includes items 5,6,18,19,20,21,22,23	1
3	31388-002	Idler arm asm RH - Includes item 22	1
4	31388-001	Idler arm asm LH - Includes item 22	1
5	5071	Pin	6
6	5708-009	Spring pin	6
7	5708-001	Spring pin	1 or *7
8	5024	Pin	1 or *5
9	31633	HD Kicker asm - Includes items 10,11,12,21	1
10	5781008	Retaining ring	2
11	5775	Roller	1
12	5001400	Pin	1
13	5100180	Spring	2
14	8427570	Screw .44-14 x 2.50	1
15	8120396	Flatwasher .50	1
16	9414073	Locknut .44	2
17	4101-017	Chain	1
18	8108-005	Set screw .38	2
19	4220240	Nylon insert	2
20	8271771	Screw .75-10 x 2.00	2
21	5504-001	Bushing	7 or *9
22	5504-014	Bushing	8
23	5504-015	Bushing	2
24	5702202	Wear pad RH	1
25	8449646	Self tapping screw	4
26	5702201	Wear pad LH	1
27	5701910	Bolt .44-14 x 1.50	1
*28	27123	Support arm	2
*29	3016	Collar	4
*30	5504-005	Bushing	2
*31	31400	Guard weld - Includes item 21	1
*32	31399-001	Fold arm weld-LH - Includes item 22	1
*33	31399-002	Fold arm weld-RH - Includes item 22	1
*34	5073	Fold pin	2

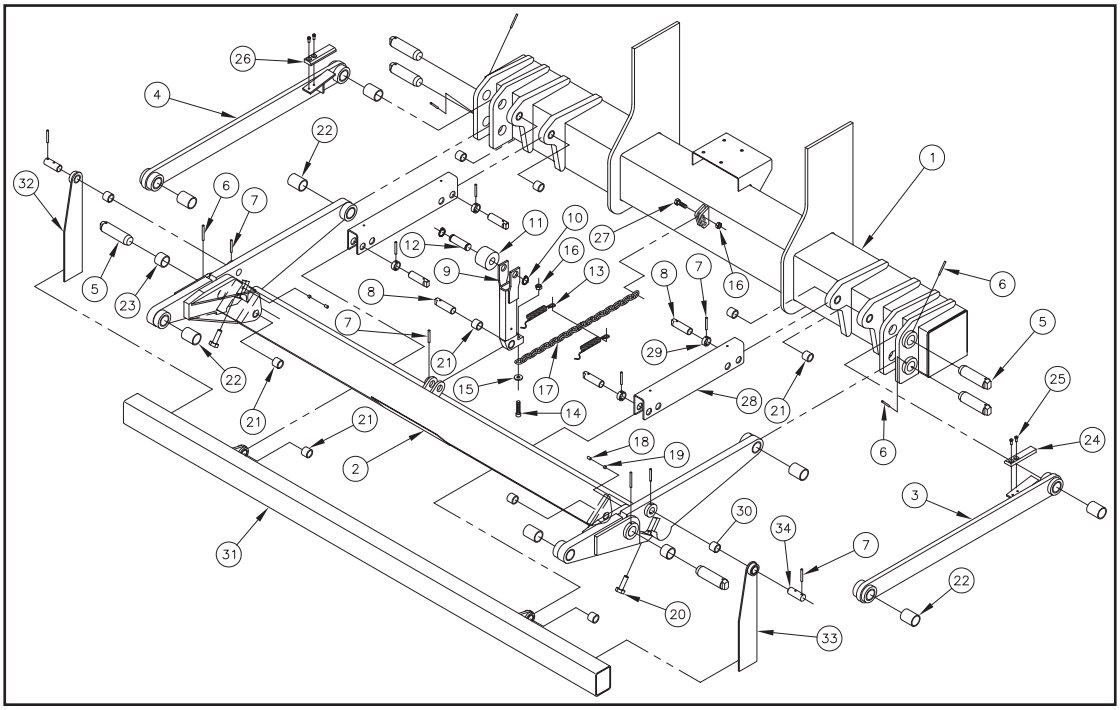

PLATFORM-TORSION SPRING ASSIST ASSEMBLY

Item	Part Number	Description	Qty.
1	3442	Platform asm - Items 2 thru 7	1
1	3445-001	Platform asm (single ramp cart stop)	1
1	3445-002	Platform asm (dual ramp cart stop)	1
2	31401	Platform main section	1
3	31407	Platform extension	1
3	31439-001	Platform extension (single ramp cart stop)-see page 10	1
3	31439-002	Platform extension (dual ramp cart stop)-see page 10	1
4	8119	Shoulder bolt .62	2
5	8106-009	Lockwasher .62	2
6	8106-008	Lockwasher .50	2
7	9414074	Locknut	2
8	5504-013	Bushing	2
9	4220240	Nylon insert	2
10	8108-005	Set screw .38	2
11	8114-002	Screw 1.00-8 x 2.00	2
12	5072	Stow pin	2
13	5708-001	Spring pin .25 x 2.00	4
14	5708-009	Spring pin .25 x 2.50	4
15	31379	Roller asm	2
16	5504-014	Bushing	2
17	3057	Spring tube	2
18	5101260	Spring	2
19	5074	Pin	2
20	5070	Pin	2
21	31405	Pivot hinge weld-LH	1
22	31406	Pivot hinge weld-RH	1

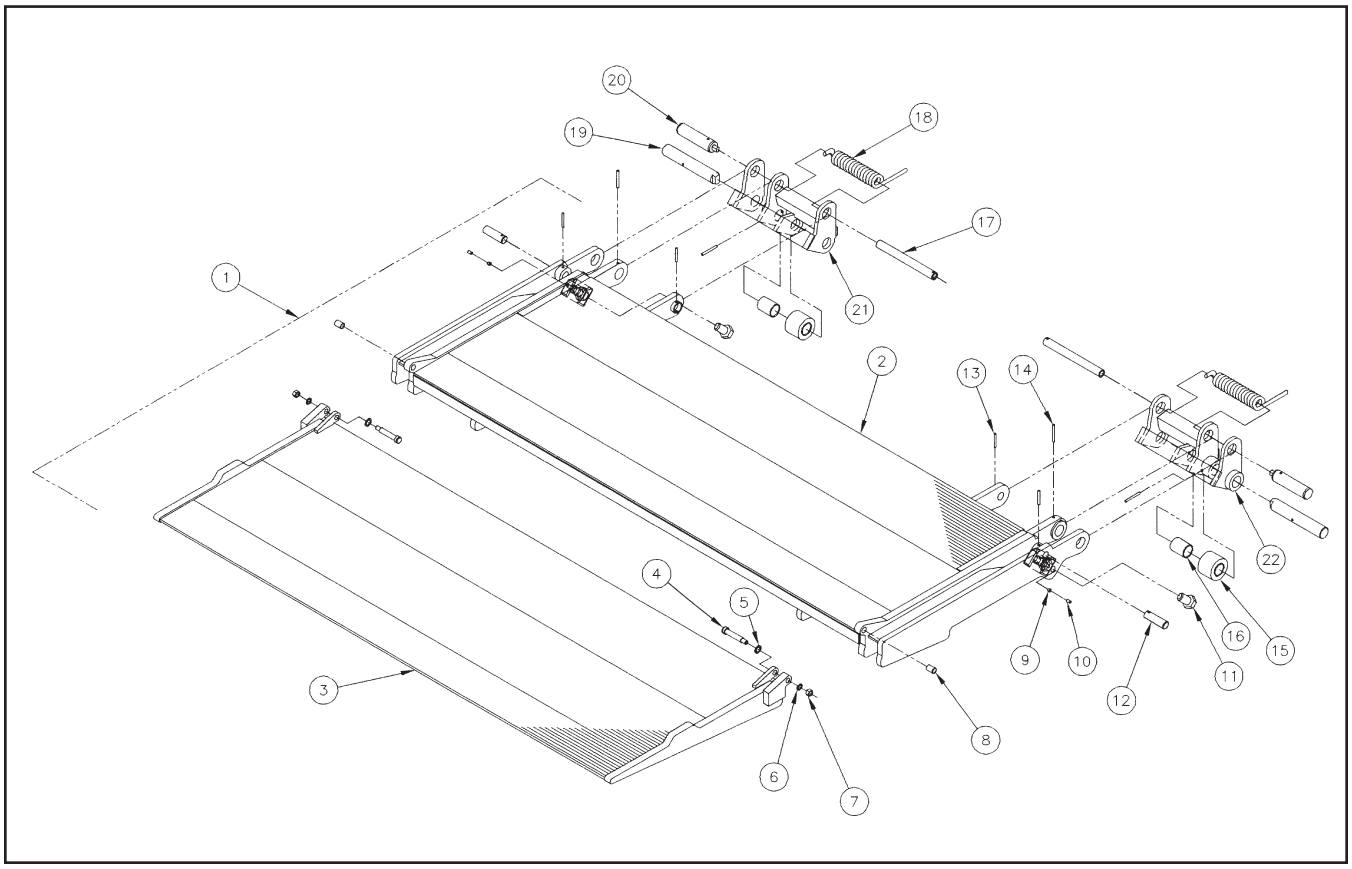

CART STOP ASSEMBLY - OPTIONAL

Item	Part Number	Description	Cart Stop Type	
			Single	Dual
1	31439-001	Cart Stop Extension Asm. (Single Cart Stop)-includes items 2-9	1	
1	31439-002	Cart Stop Extension Asm. (Dual Cart Stop)-includes items 2-9		1
2	31436-001	Cart Stop Sub Weld (Single Cart Stop)	1	
2	31436-002	Cart Stop Sub Weld (Dual Cart Stop)		2
3	5076-002	Pin	1	2
4	5110	Torsion Spring	4	4
5	5764-001	Retaining Ring-.44	12	16
6	5076-001	Pin	5	6
7	2811	Latch Bar	1	2
8	5101160	Latch Spring	1	2
9	5708-010	S.S. Spring Pin .19 x .75	4	4

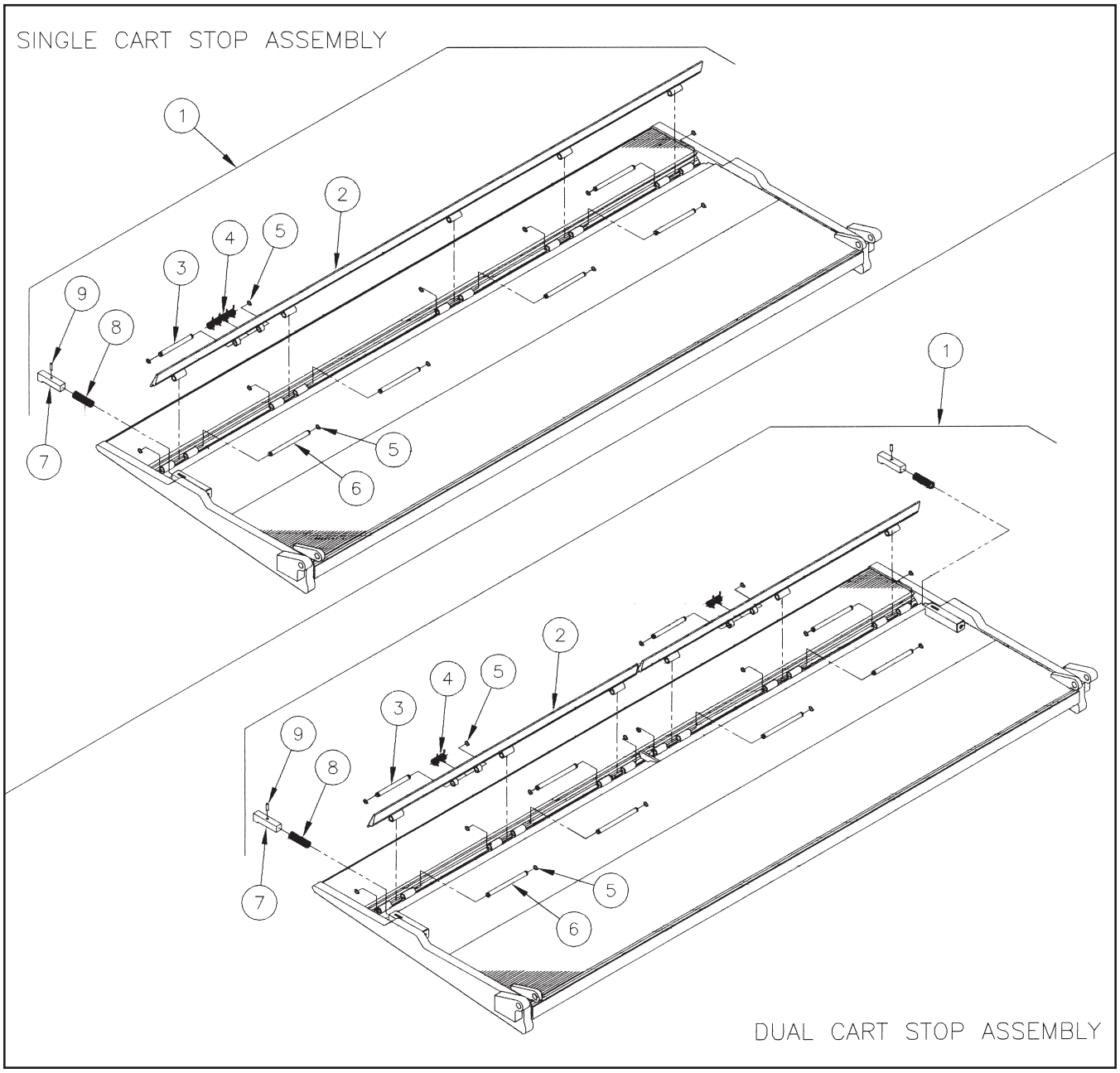

SPACER ASSEMBLY

Item	Part Number	Description	Qty.
1	3502	Spacer asm - Includes items 2 thru 6	1
2	31549-001	Control shaft	1
3	5701043	Handle grip	1
4	27117	Latch	2
5	2901170	Lever	2
6	5101100	Spring	2
7	5703	Pad	2
8	8449646	Self-tap screw	4

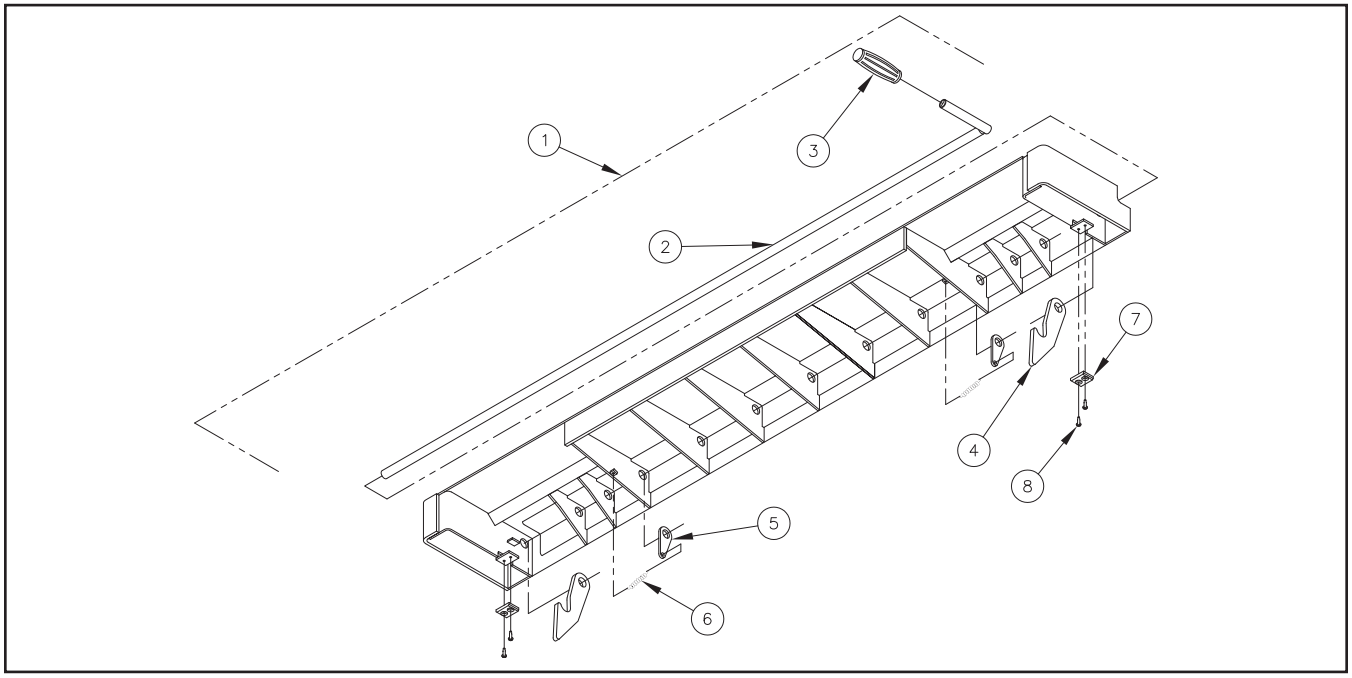

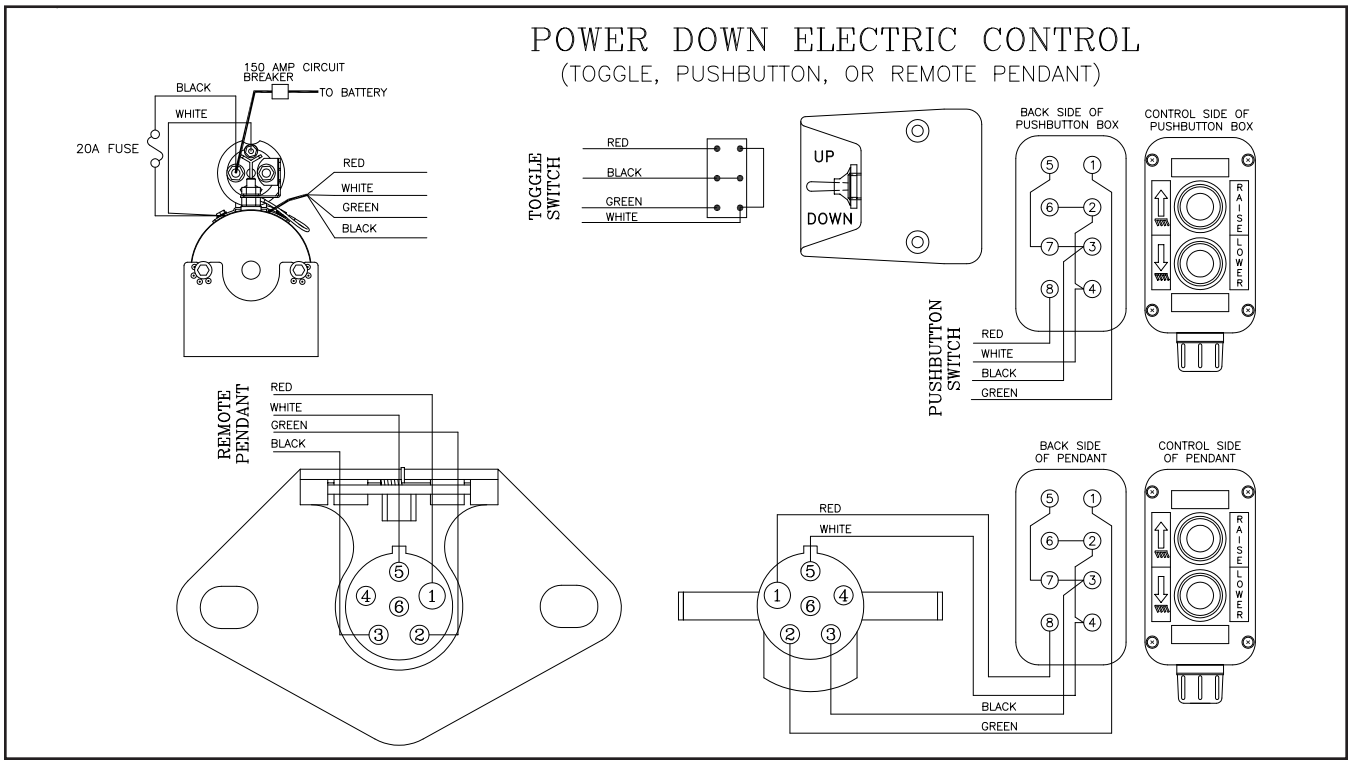

PUMP ASSEMBLY-TOGGLE AND PUSHBUTTON CONTROL

Item	Part Number	Description	Qty.
1	4404	Pump asm - Includes items 2 thru 5	1
2	4421420	Pump bracket	1
3	4420410	Breather	1
4	4423520	Motor 8111	1
5	4468	Solenoid	1
6	8180122	Bolt .38-16 x 1.00	5
7	8106-010	Internal Tooth Lockwasher	10
8	8120377	Nut .38	5
9	8120388	Flatwasher	4
10	3717	Pump enclosure asm - Includes items 11 thru 15	1
11	5758	Rubber T-handle asm	2
12	8110-006	Screw #6-32 x .50	8
13	8107-006	Flatwasher #6	8
14	8106-006	Lockwasher #6	8
15	8103-017	Nut #6	8
16	4422860	Pushbutton	1
17	31445	Toggle switch asm	1
18	4938-001	45° Elbow MAORB-FJS	1
19	8111-005	Screw #10 x .75	2
20	4318-002	Ground Cable #2 x 2'	1
21	8104-006	Screw .31 x 1	1
22	4318-001	Cable asm - 2 Ga. x 2 ft	1
23	4301770	Circuit breaker - 150A	1
24	4350	Cable lug	1
25	4319-002	Heat shrink	1
26	4300030	Battery cable -2 Ga. x 25 ft	1
27	5701260	Cable retainer	12
28	4932-001	MJ-MJ-MAORB Tee	1
29	4951-005	Hose 60.00	2
30	4951-015	Hose 51.00	2
31	4941-001	MJ-MORB Straight	2
32	4936-001	MAORB-MAORB 90°	2
33	4948-006	Flow Control 1.0 GPM	2
34	4930-001	MJ-MAORB 90°	2
35	31477	Cylinder 3.5 Bore x 8 Stroke	2
36	5024	Pin	2
37	5708-001	Spring pin	2
38	5009	Pin	2
39	5781008	Retaining ring	2
40	5763	Grommet	4
41	4953-001	Branch tree MJ-MJ-MJ	1
42	5700100	Tie Strap 32.00	1

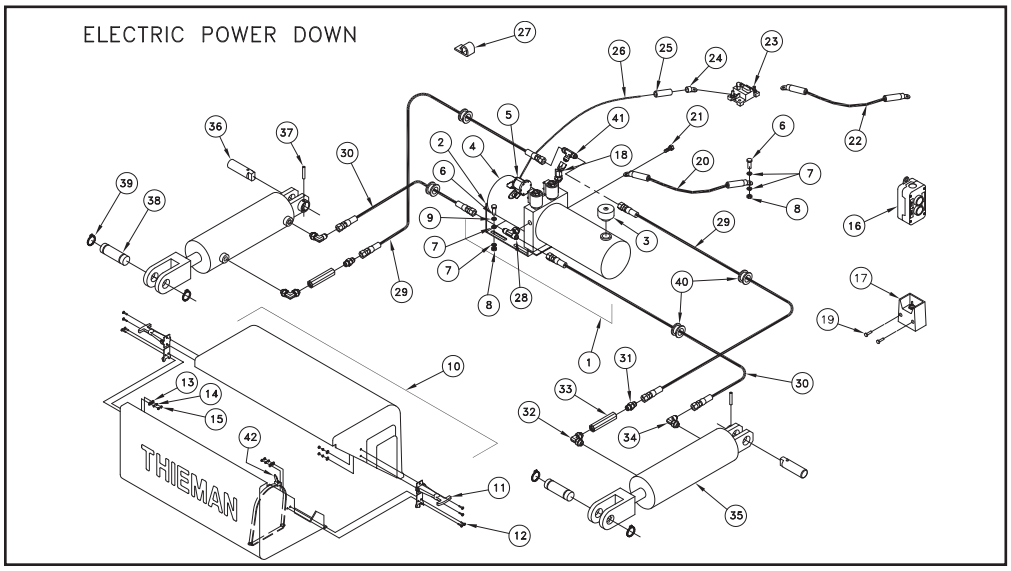

4404 PUMP PARTS

Item	Part Number	Description	Qty./Model
1	4423520	Motor 8111	1
2	4439	Pump and Reservoir Only	1
3	4420410	Breather Cap	1
4	4480	Buss Bar	1
5	4421520	Bearing	1
6	4421530	Seal	1
7	8109-012	Screw .25 x .75	2
8	4421420	Bracket	1
9	4468	Solenoid	1
10	4421600	O-Ring	2
11	4452	Solenoid Coil Only	2
12	4445	Solenold Valve Asm (lower)	1
13	4438	Solenoid Valve Asm (raise)	1
14	4457	Reservoir Ø4.50 x 12.00	1
15	4421660	Self Tap Screw #10 x .38	6

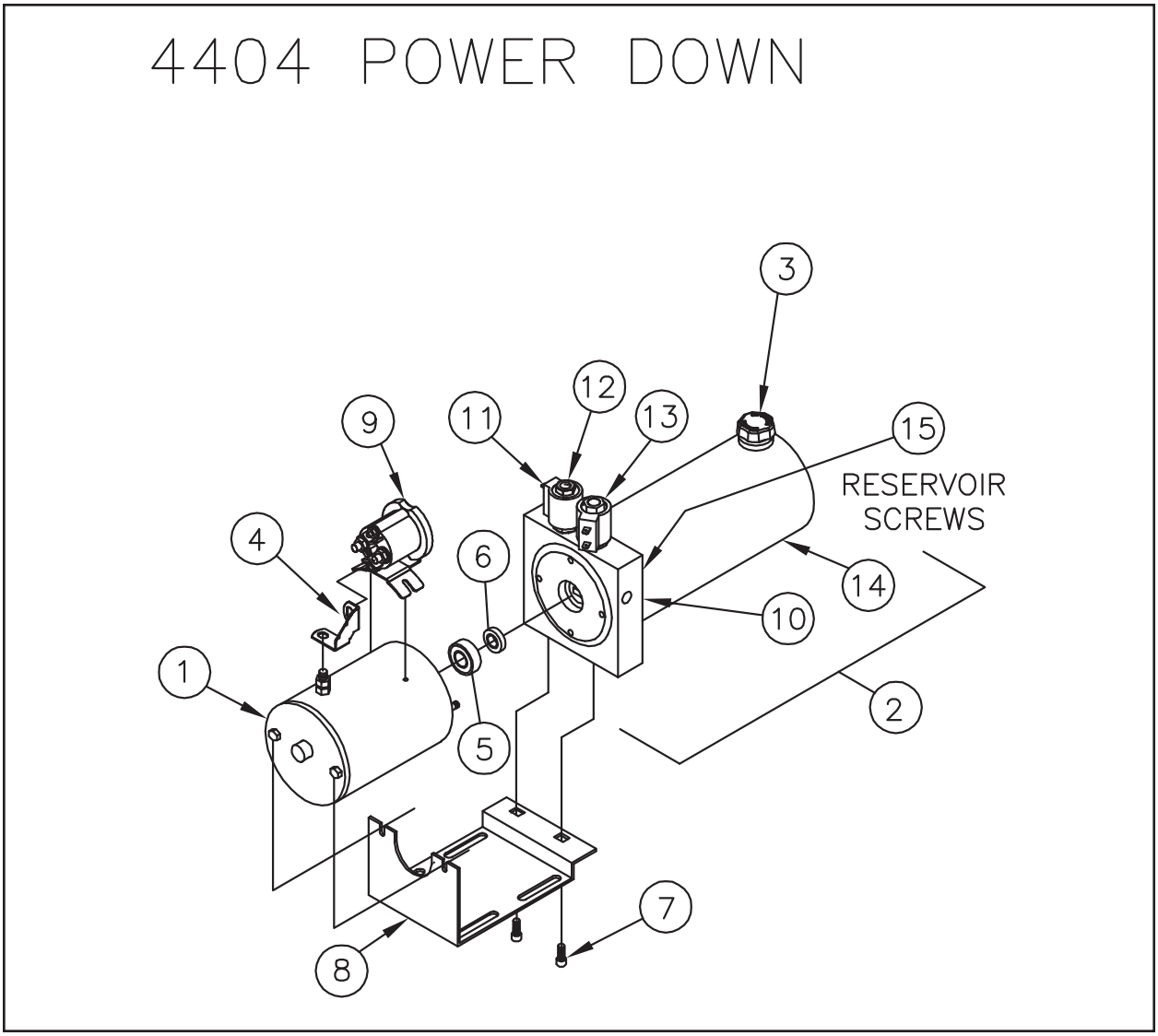

SNUBBER KIT 172

Item	Description	Part Number	Qty.
	Snubber Kit Items 1 to 6	3735330	1
1	Snubber	5702290	2
2	Mounting Angle	2019033	2
3	Locknut .31-18	9413447	2
4	Flat Washer .31	8120386	4
5	Base Plate	23049-001	2
6	Screw .31-18	8180091	2

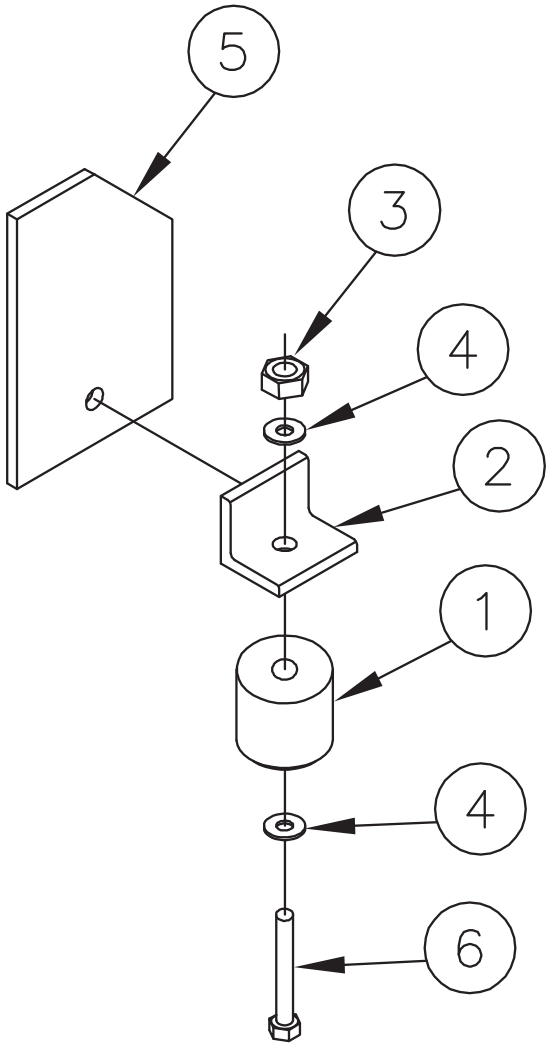

TROUBLESHOOTING GUIDE
LRST40EST

Test Equipment:
1. 0-5000 psi pressure gauge
2. DC voltmeter/ohm meter
3. DC amp meter
4. standard mechanics tools

Note: Please refer to the electrical diagrams and hose connection drawings in the liftgate's owners manual when troubleshooting. This guide is only for standard Thieman liftgates. Special liftgates with options other than those in the owner's manual will require special diagrams for troubleshooting. Read and understand this entire guide completely before doing any troubleshooting. Certain listed problems may be related to other problems listed so a comprehensive knowledge is required before proceeding.

1. Problem - Pump motor will not run in the raise or lower mode

Causes -
a. Tripped circuit breaker
b. Blown 20A fuse
c. Defective or undercharged battery(ies)
d. Improper battery cable connection or improper ground connection
e. Defective or improperly wired raise switch
f. Defective or improperly wired lower switch
g. Defective or improperly wired solenoid start switch
h. Defective pump motor

Corrections -
a. Reset the circuit breaker located within 2ft of the liftgate supply battery(ies).
b. Replace 20A fuse
c. The "at rest" voltage for the batteries without the engine running and under no load should be at least 12.5V. The minimum voltage between the motor stud and ground is 9V at maximum load conditions. If proper voltage is not present, charge or replace the batteries. The battery(ies) on the vehicle should be that which has a minimum 150 amp reserve capacity.
d. Trace battery and ground cable connections to locate improper connection(s). Make sure the ground cable is installed going from the aluminum pump base to bare metal on the truck frame. Make sure the ground cable from the batteries to the frame is a heavy 2ga. cable and that it too is connected to bare metal on the frame. Make sure there is 12.5V present at the large terminal on the motor start solenoid where the 2ga. cable from the batteries is connected. Replace any damaged cables and repair any bad connections.
e. Check for voltage on the black wire at the control switch. If no voltage is present the black wire from the motor start solenoid is loose or broken and needs repaired. If voltage is present then check for voltage at the green and white wire on the switch with the switch in the "RAISE" position. If no voltage is present, replace the switch.
f. If the pump motor runs in the "RAISE" position but will not run in the "DOWN" position, then check for voltage on the white and red wire at the switch. If no voltage is present replace the switch.
g. Check for voltage on the white wire at the motor start switch when the switch is activated. If no voltage exists the white wire is loose or broken between the switch and the motor start solenoid. Check that the purple ground wire on the start solenoid is connected properly and there are no bad connections. If there is voltage on the white wire and the coil does not energize or if there is no voltage present at the motor terminal then replace the start switch.
h. With the switch activated in the "RAISE" or "LOWER" position and the motor start solenoid is activated, check for voltage at the motor terminal. If voltage is present and the motor is not running, replace the motor.

2. Problem - Liftgate will not raise to bed with a load and the pump motor running

Causes
a. Low hydraulic fluid
b. Cylinders are plumbed incorrectly to pump
c. Overload condition
d. Defective raise solenoid coil or valve

e. Improperly adjusted or defective main relief valve
f. Lift cylinders are bypassing, liftgate is drifting down
g. Broken hydraulic line
h. Clogged or disconnected suction line
i. Defective pump

Corrections -

a. Make sure the reservoir has the proper amount of fluid. Either check for the fluid line through the plastic reservoir or for metal reservoirs remove the breather cap and check the fluid line through the fill hole. The hydraulic fluid should be within 1/2" of the top of the reservoir with the liftgate in the stored position. Fill with Dexron III automatic transmission fluid.

b. Check that the cylinders and pump are plumbed together according to the drawings in the liftgates owners manual. The C1 port on the pump (C1 is stamped in the aluminum pump base by this port) is the high pressure port and should connect to the rod end of the cylinders lifting. The other port on the cylinders are the low pressure lowering ports and should be plumbed to the C2 port on the pump (C2 is stamped in the aluminum pump base by this port).

c. The power unit on the LRST40 is equipped with a lifting relief valve to prevent overloading of the liftgate. See relief setting in “Maintenance Guide” section of this manual.

d. With the “RAISE” switch engaged check for voltage on the green wire at the switch. If no voltage is present replace the switch. If voltage is present, with the “RAISE” switch engaged, check for voltage at the green wire on the raise solenoid valve coil terminal at the pump. If no voltage is present, the green wire from the “RAISE” switch is loose or broken and needs repaired. If there is voltage (minimum of 9.5 volts) and the valve is not opening to allow the gate to raise, either the raise coil is bad or the entire raise coil/valve assembly is bad. To check to see if the coil is defective, remove the green wire from the spade terminal on the raise coil and check for continuity between the spade terminal and the nut which holds the coil on the valve stem. If continuity does not exist, replace the defective coil, otherwise replace the defective raise coil/valve assembly.

e. See section “c” above for relief valve setting. Plumb a pressure gauge into the high pressure circuit of the liftgate (those hoses connected to the C1 port on the pump). Remove all loads from the liftgate’s platform. Engage the “RAISE” switch until the liftgate is fully raised. Keep the “RAISE” switch engaged until the pump bypasses through the relief valve and note the pressure on the gauge at this time. If the rated relief pressure is not present during relief, adjust the high pressure relief valve setting as necessary. There are two relief valves on this pump so make sure to adjust only the high pressure relief setting at this time. The high pressure relief is the higher one on the aluminum pump base. If the relief pressure is not attainable the relief valve must be cleaned and/or replaced or the pump is defective. See part i below.

f. If the liftgate will not raise with a load on the platform but empty is raising slowly or only partially, one or both of the cylinders may be bypassing. To check for bypassing cylinders do the following. Lower the gate to the ground to relieve all pressure from the cylinders. Disconnect both cylinders from the liftarm. Press the “RAISE” switch until both cylinders are fully retracted. Disconnect the low pressure hoses from the power unit at the swivel fitting at the C2 port at the pump. Plug the newly opened end(s) of the swivel fitting. Put the loose ends of the disconnected hoses in a container to catch any oil, which comes out during this test. Press the “RAISE” switch for 15 to 20 seconds and watch for a steady stream of fluid coming out of one of the disconnected hose ends into the container. If no steady stream of oil is present reconnect all hoses and press the “LOWER” switch until both cylinders are fully extended. Disconnect the high pressure hoses from the power unit at the swivel fitting at the C1 port at the pump. Plug the newly opened end(s) of the swivel fitting. Put the loose ends of the disconnected hoses in a container to catch any oil, which comes out during this test. Press the “LOWER” switch for 15 to 20 seconds and watch for a steady stream of fluid coming out of one of the disconnected hose ends into the container. Replace or rebuild any cylinder with fluid coming out of its disconnected hose end, as this indicates fluid is bypassing the piston seals on the cylinder. Reconnect rebuilt or replaced cylinders and hoses as before.

g. Broken or punctured hydraulic lines and fittings must be replaced with care to avoid injury from high pressure oil streams.

h. With the liftgate at the ground, disconnect the power unit and remove the reservoir. Check to see if the suction tube is clogged or has fallen out of the pump base. Clean the screen or reattach the suction tube as required.

i. If all else fails replace the power unit, it is probably worn out.

3. Problem - Liftgate will not lower with the pump motor running

Causes - a. Defective lowering solenoid coil or valve
b. Clogged or defective hydraulic lines, fittings or flow controls

Corrections - a. With the “LOWER” switch engaged check for voltage on the red wire at the switch. If no voltage is present replace the switch. If voltage is present, with the “LOWER” switch engaged, check for voltage at the red wire on the lower solenoid valve coil terminal. If no voltage is present, the red wire from the “LOWER” switch is loose or broken and needs replaced. If there is voltage (minimum of 9.5 volts) and the valve is not opening to allow the gate to lower, either the lower coil is bad or the entire lower coil/valve assembly is bad. To check to see if the coil is defective, remove the red wire from the spade terminal on the lower coil and check for continuity between the spade terminal and the nut, which holds the coil on the valve stem. If continuity does not exist, replace the defective coil, otherwise replace the defective lower coil/valve assembly.
b. Remove any obstruction in the hoses, fittings or flow controls or replace any hose, fitting or flow control, which does not allow fluid to flow through freely.

4. Problem - Liftgate raises slowly - The raise speed of the LRST40 on a 56” bed height while empty at 70° F is approximately 8-12 seconds. The raise speed loaded for the same conditions is approximately 20-25 seconds.

Causes - a. Overload condition
b. Cold weather
c. Partially blocked suction screen
d. Lift cylinders are bypassing
e. Improperly adjusted or defective raise relief valve
f. Low voltage and/or bad ground
g. Worn out pump

Corrections - a. See section 2a
b. Refer to Owner’s Manual for alternative oils to use for cold weather conditions.
c. Remove reservoir and clean or replace suction screen as necessary.
d. See section 2f
e. See section 2e

5. Problem - Foamy oil flowing from reservoir breather.

Causes - a. Air present in the system
b. Flow control is on backwards
c. Inoperable flow control

Corrections - a. This can occur if the motor is not running as the liftgate is lowered. See problem 1, part e and f. Also air can enter the system if the fluid level is low, see problem 2, part a, or if the suction tube is disconnected, see problem 2, part h. Also air may enter through fittings, which are not tightened properly, so check for any leaks around fittings or hoses. Once the source of the air is determined, the cylinders must be bled of all air. Most air can be removed from the system by lowering the gate to the ground to relieve all pressure from the cylinders, unpinning the cylinders and cycling them back and forth several times from fully extended to fully retracted and allowing the pump to bypass through the relief valves for a few seconds in each direction.
b. The flow control provided is rated a 1.0 GPM. The arrow on the flow control must point away from the cylinder, designating the direction of the controlled flow. Correct as needed.
c. Remove and disassemble the flow control and check for excessive wear and contamination. Clean as needed and reassemble. If this does not correct the problem replace the flow control.

If you have any questions or problems that are not covered in this guide please call Thieman’s Engineering Department at 1-800-524-5210