Technical Data Sheet

ENGINEERING TOMORROW

Compressor model **NX21TBa**

Voltage **220-240V 50Hz ~1**

Refrigerant **R290**

Compressor status

APPLICATION		COMPRESSOR		MOTOR	
Application	High-Medium Back Pressure	Displacement	20,72 cm³	Voltage/Frequency	220-240V 50Hz
Refrigerant	R290	Diameter	34,93 mm	Voltage range	187-255 V
Evaporating Temp.	-25,0 ºC to 10,0 ºC	Stroke	21,62 mm	Type	CSR
Expansion	Capillar/Valve	Net Weight	16,09 Kg	Phase number	1 PH
Comp. Cooling	Fan cooled	Oil type	ISO VG 32 ESTER	Locked Rotor Amps (LRA)	34,50 A
Max. ambient temp.	43,0 ºC	Oil charge	500 cm³	Max. Cont. Current (MCC)	8,00 A
		HP	7/8 hp	Main W. resist. at 25ºC	2,34 Ω
				Start W. resist. at 25ºC	7,22 Ω

NOMINAL PERFORMANCE

	ASHRAE	CECOMAF
Cooling Capacity	2.334 kCal/h	2.267 W
COP	2,55 W/W	2,18 W/W
EER	2,19 kCal/Wh	1,88 kCal/Wh
Input Power	1.064 W	1.041 W
Current	5,46 A	5,35 A

APPROVALS

TEST CYCLE CONDITIONS

	ASHRAE	**CECOMAF**
	HMBP (D)	**HMBP (C)**
Evaporating temp. (T_e)	7,2 ºC	5,0 ºC
Condensing temp. (T_c)	55,0 ºC	55,0 ºC
Liquid temp. ($T_{liq.}$)	46,0 ºC	55,0 ºC
Ambient temp. ($T_{amb.}$)	35,0 ºC	32,0 ºC
Suction temp. ($T_{suction}$)	35,0 ºC	32,0 ºC
Voltage/Frequency	220 V 50 Hz	220 V 50 Hz

ELECTRICAL COMPONENTS

Starting capacitor	88-108 µF 330 V			
Run capacitor	16 µF 420 V			
Relay	Option 1	Option 2		
Reference	2014 180. + NTC15Î©	QLZ 16.7A + NTC15Î©		
Pick-Up	16.7 A	16.7 A		
Drop-Out	14 A	14 A		
Protector	Option 1			
Reference	T0260			
Current	22,00 A			
Time check	7,5-14 seg			
Disc temp. (Open/Close)	105,00 / 52,00 ºC			

This product is approved for R290 and R600a regarding explosion safety according to standard EN 60335-1 and EN 60335-2-34

Technical Data Sheet

ENGINEERING TOMORROW

ASHRAE

Tc °C	Te °C	Cooling Capacity kCal/h	Consumption W	Current A	COP W/W	EER kCal/Wh
40	-25	777	607	3,41	1,49	1,28
40	-20	993	652	3,61	1,77	1,52
40	-15	1.252	698	3,81	2,09	1,79
40	-10	1.556	745	4,01	2,43	2,09
40	-5	1.903	792	4,22	2,80	2,40
40	0	2.295	840	4,44	3,18	2,73
40	5	2.730	888	4,65	3,58	3,07
40	7,2	2.936	910	4,75	3,75	3,23
40	10	3.209	937	4,88	3,98	3,43
45	-25	708	619	3,47	1,33	1,14
45	-20	903	670	3,69	1,57	1,35
45	-15	1.142	723	3,92	1,84	1,58
45	-10	1.426	775	4,15	2,14	1,84
45	-5	1.753	828	4,39	2,46	2,12
45	0	2.124	882	4,63	2,80	2,41
45	5	2.539	937	4,88	3,15	2,71
45	7,2	2.735	961	4,99	3,31	2,85
45	10	2.997	992	5,13	3,51	3,02
50	-25	639	631	3,52	1,18	1,01
50	-20	814	689	3,77	1,37	1,18
50	-15	1.033	747	4,02	1,61	1,38
50	-10	1.295	806	4,28	1,87	1,61
50	-5	1.602	865	4,55	2,15	1,85
50	0	1.952	925	4,82	2,45	2,11
50	5	2.347	986	5,10	2,77	2,38
50	7,2	2.535	1.013	5,22	2,91	2,50
50	10	2.785	1.047	5,38	3,09	2,66
55	-25	570	643	3,57	1,03	0,89
55	-20	724	707	3,85	1,19	1,02
55	-15	923	771	4,13	1,39	1,20
55	-10	1.165	836	4,42	1,62	1,39
55	-5	1.451	902	4,71	1,87	1,61
55	0	1.781	968	5,02	2,14	1,84
55	5	2.155	1.034	5,32	2,42	2,08
55	7,2	2.334	1.064	5,46	2,55	2,19
55	10	2.574	1.102	5,64	2,72	2,34
60	-25	501	655	3,62	0,89	0,76
60	-20	635	725	3,93	1,02	0,88
60	-15	813	795	4,24	1,19	1,02
60	-10	1.035	866	4,56	1,39	1,19
60	-5	1.301	938	4,88	1,61	1,39
60	0	1.610	1.010	5,21	1,85	1,59
60	5	1.964	1.083	5,55	2,11	1,81
60	7,2	2.134	1.116	5,70	2,22	1,91
60	10	2.362	1.157	5,89	2,37	2,04

CECOMAF

Tc °C	Te °C	Cooling Capacity W	Consumption W	Current A	COP W/W	EER kCal/Wh
40	-25	835	610	3,43	1,37	1,18
40	-20	1.070	656	3,63	1,63	1,41
40	-15	1.351	702	3,83	1,92	1,66
40	-10	1.678	749	4,03	2,24	1,94
40	-5	2.051	797	4,24	2,57	2,22
40	0	2.470	845	4,46	2,92	2,53
40	5	2.934	894	4,68	3,28	2,84
40	7,2	3.153	916	4,78	3,44	2,98
40	10	3.445	943	4,91	3,65	3,16
45	-25	757	622	3,48	1,22	1,05
45	-20	968	674	3,71	1,44	1,24
45	-15	1.225	727	3,93	1,69	1,46
45	-10	1.528	780	4,17	1,96	1,69
45	-5	1.877	833	4,41	2,25	1,95
45	0	2.271	888	4,65	2,56	2,21
45	5	2.712	943	4,90	2,88	2,48
45	7,2	2.920	967	5,01	3,02	2,61
45	10	3.198	999	5,16	3,20	2,77
50	-25	679	634	3,53	1,07	0,92
50	-20	866	692	3,78	1,25	1,08
50	-15	1.099	751	4,04	1,46	1,26
50	-10	1.378	810	4,31	1,70	1,47
50	-5	1.702	870	4,57	1,96	1,69
50	0	2.073	931	4,85	2,23	1,92
50	5	2.489	992	5,13	2,51	2,17
50	7,2	2.687	1.019	5,25	2,64	2,28
50	10	2.952	1.054	5,41	2,80	2,42
55	-25	601	646	3,59	0,93	0,80
55	-20	764	711	3,86	1,07	0,93
55	-15	973	775	4,15	1,25	1,08
55	-10	1.227	841	4,44	1,46	1,26
55	-5	1.528	907	4,74	1,68	1,46
55	0	1.874	974	5,04	1,92	1,66
55	5	2.267	1.041	5,35	2,18	1,88
55	7,2	2.454	1.071	5,49	2,29	1,98
55	10	2.705	1.109	5,67	2,44	2,11
60	-25	523	659	3,64	0,79	0,69
60	-20	662	729	3,94	0,91	0,78
60	-15	846	800	4,26	1,06	0,91
60	-10	1.077	871	4,58	1,24	1,07
60	-5	1.353	944	4,91	1,43	1,24
60	0	1.676	1.017	5,24	1,65	1,42
60	5	2.044	1.090	5,58	1,87	1,62
60	7,2	2.221	1.123	5,74	1,98	1,71
60	10	2.459	1.165	5,93	2,11	1,82

EN12900

X	Cooling Capacity (W)	Consumption (W)	Current (A)	Mass Flow (kg/h)
1	4.059,5514424515	514,2157036072	2,9217994839	37,279895155715
2	126,9882561555	0,0274974008	-0,0016426572	1,2862456521269
3	-40,6556039757	8,8366820271	0,0407959688	-0,21306614624155
4	0,9008663706	0,0192079967	0,0001564542	0,014064564023357
5	-0,9975303404	0,2547369610	0,0012036952	-0,0041325633127725

Equation	$x_1 + x_2Te + x_3Tc + x_4Te^2 + x_5TeTc$

Technical Data Sheet

COMPRESSOR DIMENSIONS

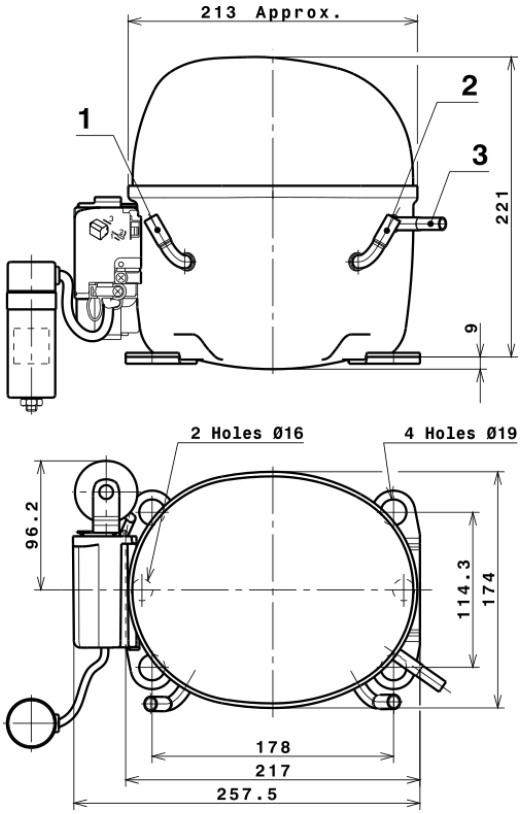

	DESIGNATION	INTERNAL DIAM.
1	Service	9,7 mm
2	Suction	9,7 mm
3	Discharge	6,5 mm

WIRING DIAGRAMS AND ELECTRICAL ASSEMBLY

CSR CONNECTION (CURRENT RELAY + NTC) (X range)

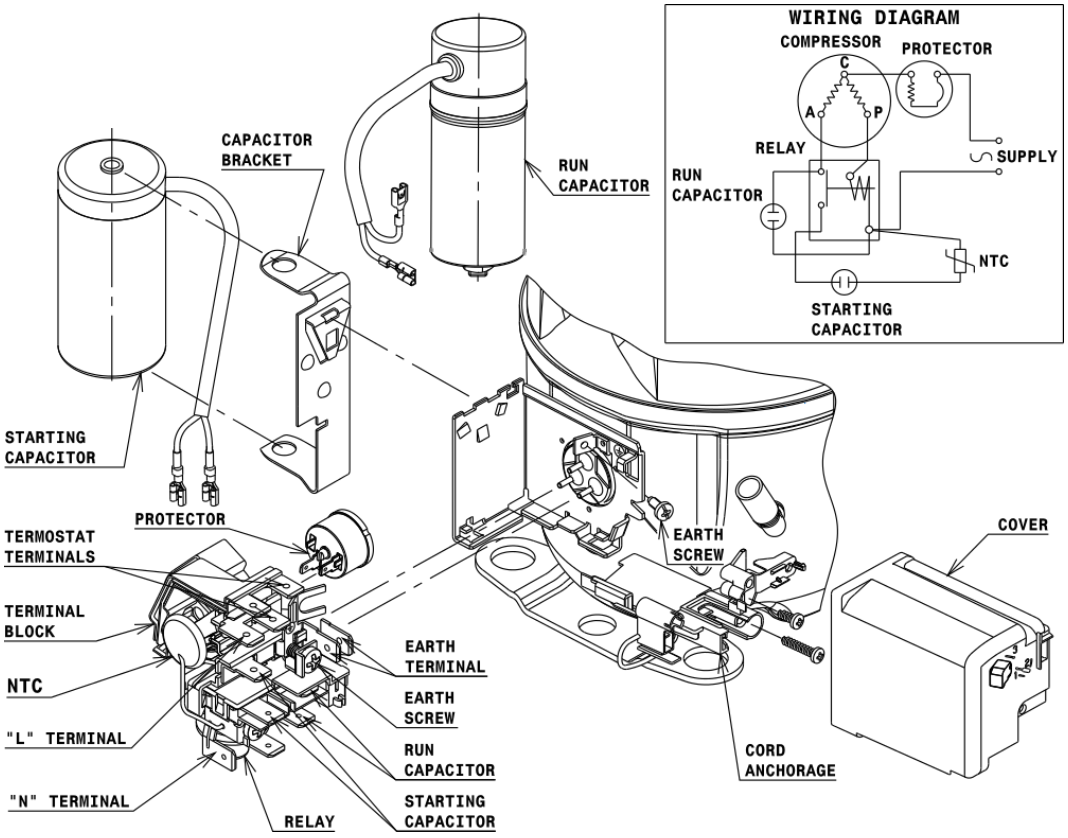

FIXINGS

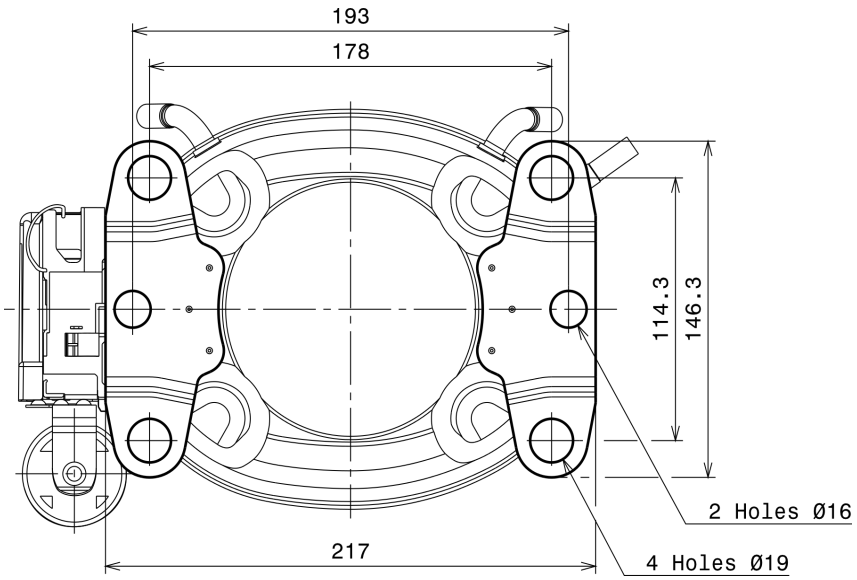

SILENT BLOCKS (MOUNTING ACCESSORIES)

STANDARD

Ø19 holes (178x114.3 net)

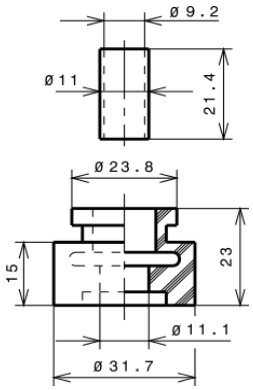

SOA

SOA R290 HMBP

