VEVOR®

TOUGH TOOLS, HALF PRICE

VENTILATION FAN
USER MANUAL

We continue to be committed to provide you tools with competitive price. "Save Half", "Half Price" or any other similar expressions used by us only represents an estimate of savings you might benefit from buying certain tools with us compared to the major top brands and doses not necessarily mean to cover all categories of tools offered by us. You are kindly reminded to verify carefully when you are placing an order with us if you are actually saving half in comparison with the top major brands.

VEVOR®

VENTILATION FAN

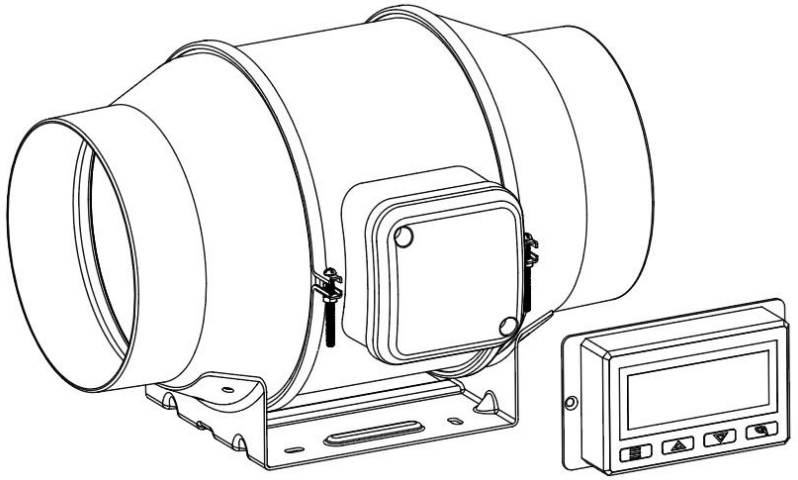

<Picture Only For Reference>

NEED HELP? CONTACT US!

Have product questions? Need technical support? Please feel free to contact us:

CustomerService@vevor.com

This is the original instruction, please read all manual instructions carefully before operating. VEVOR reserves a clear interpretation of our user manual. The appear- ance of the product shall be subject to the product you received. Please forgive us that we won't inform you again if there are any technology or software updates on our product.

【Contents】

Ⅰ、SAFETY PRECAUTIONS
Ⅱ、PRODUCT DESCRIPTION
Ⅲ、INSTALLATION
Ⅳ、DIMENSION AND SPECIFICATION
Ⅴ、POWERING AND SETUP
Ⅵ、CLEANING
Ⅶ、PROGRAMMING
Ⅷ、FAQ
Ⅸ、ATTENTIONS

SAFETY PRECAUTIONS

 WARNING	Improper operation may cause personal injury. Improper operation may cause damage to the machine. Improper operation may cause others object damage.
	The symbol indicates that the user should pay high attention to and pay attention to the drawing shows the situation to be noted, and the left figure shows "Be careful of electric shock"
	Disconnect the fan when moving from one location to another.
	Do not use a power supply that does not meet the rated voltage The use of non compliant power supplies can cause fire or electric shock.
	If the machine emits smoke, odor, motor noise and other abnormal conditions,Please do not use it. It may cause fire or electric shock
	Do not disassemble, repair or rectify the machine during use.Doing so may result in fire or electric shock and personal injury

	BE CAREFUL
	DO NOT use fan in window. Rain may create electrical hazard.
	Do not damage or arbitrarily change the original power cord, and do not bend, forcibly pull, bind or press the power cord under heavy objects.This will damage the power cord, causing electric leakage fire or electric shock
	If the machine is not used for a long time, please unplug the power cord from the socket
	If the power cord is damaged, contact your local service center or a qualified electrician to install an appropriate replacement cord to prevent any injury or damage
	Never insert fingers, pencils, or any other object through the guard when fan is running.
	When the power cord is unplugged from the socket, the plug should be unplugged. Do not pull the power cord to forcibly pull the wire, which may cause damage to the wire and lead to leakage or electric shock
	Please disconnect the power supply when cleaning

PRODUCT DESCRIPTION

TECHNICAL PARAMETER

Brand	VEVOR		
Model	BT-FL14B	BT-FL16B	BT-FL18B
Voltage	120 - 240 V	120 - 240 V	120 - 240 V
Frequency	60 Hz	60 Hz	60 Hz
Power	23 W	36 W	61 W
Speed	2900 RPM	2800 RPM	3000 RPM
Duct Size	Φ100/Φ125	Φ150/Φ160	Φ200
Power Cord Length	1.6 M	1.6 M	1.6 M
Working Ambient Temperature	-10~ 45 ℃	-10~ 45 ℃	-10~ 45 ℃

PRODUCT STRUCTURE DIAGRAM

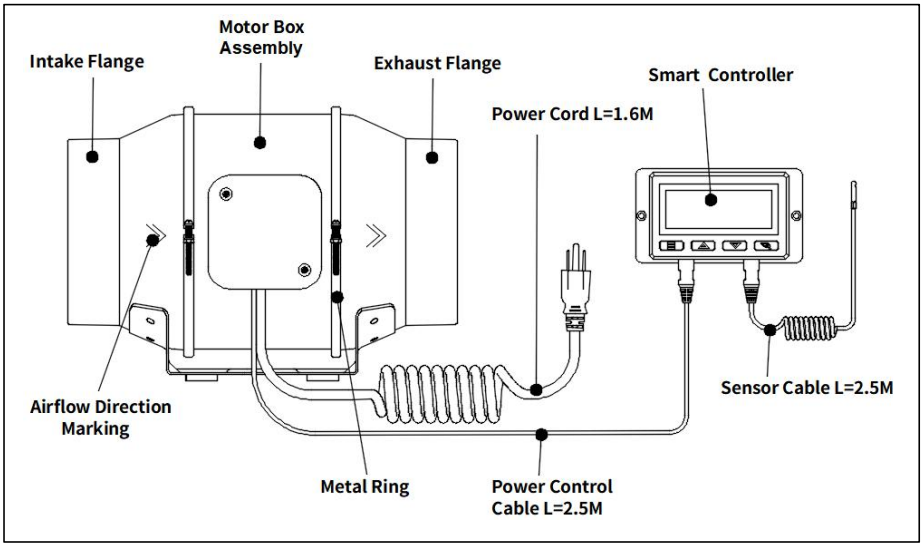

INSTALLATION

✸ **TIPS!** Prepare tools in advance:

Cross screwdriver, Hammer

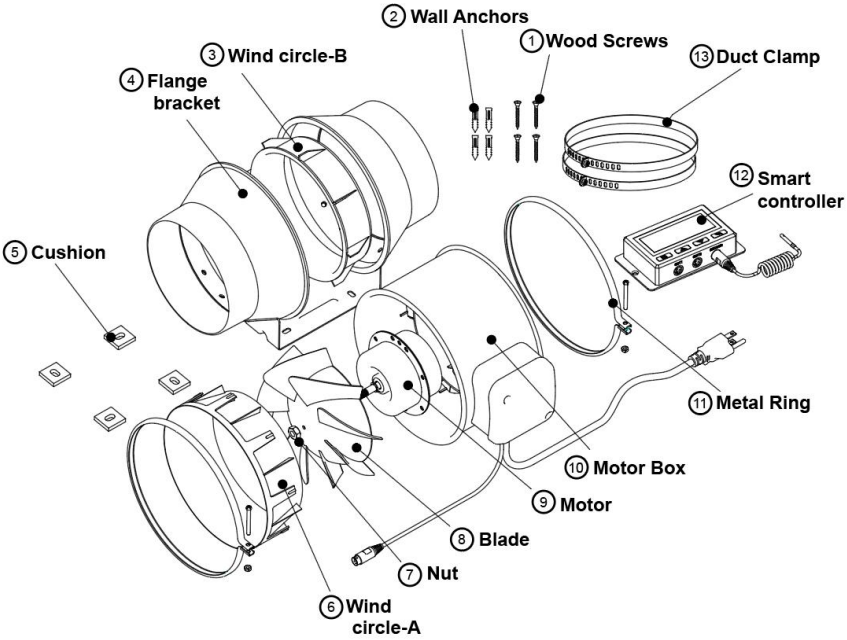

PARTS LIST:

NO	PARTS	Quantity
1	Wood Screws	4
2	Wall Anchors	4
3	Wind circle-B	1
4	Flange bracket	1
5	Cushion	4
6	Wind circle-A	1
7	Nut	1

NO	PARTS	Quantity
8	Blade	1
9	Motor	1
10	Motor Box	1
11	Metal Ring	2
12	Smart Controller	1
13	Duct Clamp	2

Step 1：

1、Unscrew and loosen the metal rings using a Phillips screwdriver and pliers. See the(Fig.1.)

2、Remove the motor box from the flange bracket.Remove the wind circle between the motor box and the intake flange.See the(Fig.2.)

3、Use the flange bracket to set your desired fan position. Mark the four mounting holes.See the (Fig.3.)

4、Drill four holes into the marked locations. Make sure your mounting area is structurally sound and free from obstruction.See the(Fig.4.)

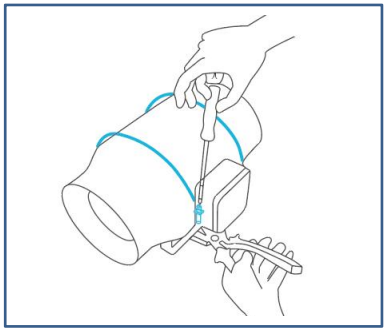

Fig.1.

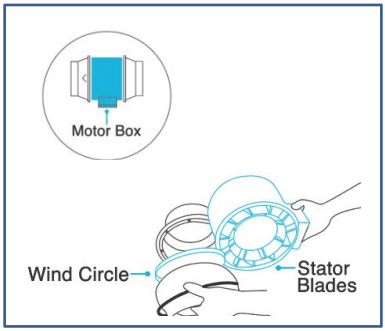

Fig.2.

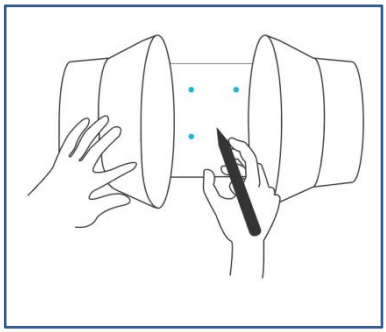

Fig.3.

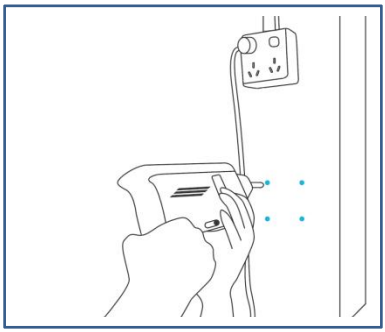

Fig.4.

Step 2:

1、If you are mounting onto anything other than a wood support or stud, insert the included four wall anchors into the drilled mounting holes. You may need to use a hammer to secure them through the holes. See the (Fig.5.)

2、Paste the cushion onto the flange bracket to ensure that the hole of the cushion is aligned with the hole of the flange bracket. See the (Fig.6.)

3、Align the flange bracket's holes with the wall anchors. Screw in four wood screws with a screwdriver or drill to secure the flange bracket.Make sure its airflow arrow is pointing in your desired direction.See the (Fig.7.)

Place the wind circle back into the intake flange and reposition the metal clamps over the flanges if applicable.See the (Fig.8.)

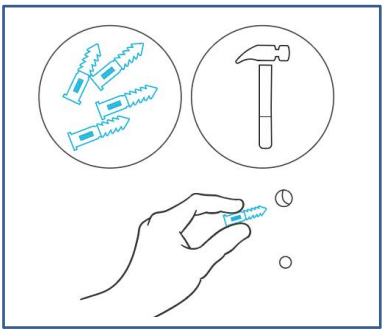

Fig.5.

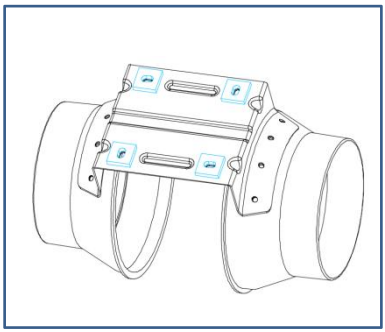

Fig.6.

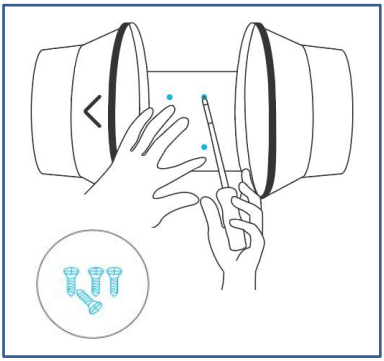

Fig.7.

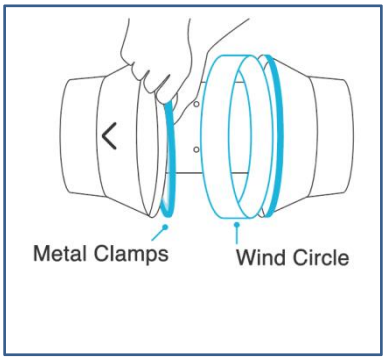

Fig.8.

4、Slide the motor box back into the flange bracket, making sure its airflow arrow is pointing in the same direction as the flange bracket's arrow. Tighten the metal clamps using a Phillips screwdriver and pliers to secure the motor box. See the (Fig.9.)

5、Place the metal rings back onto the flanges and tighten the screws back to secure the fan.See the (Fig.10.)

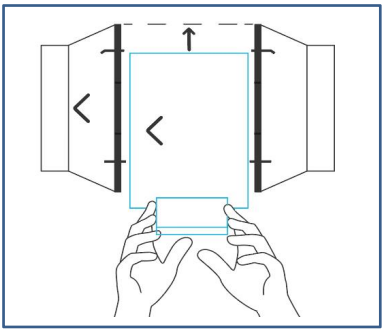

Fig.9.

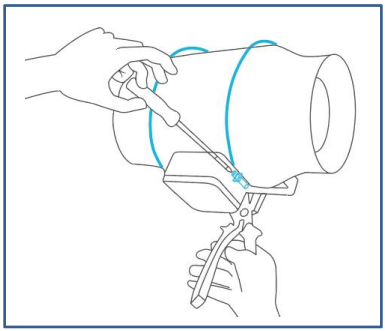

Fig.10.

Step 3：

1、If installing ducting, purchase a suitable duct and duct clamp and secure it to both ends of the fan to ensure tight sealing. Finally tighten the air duct clamp with a screwdriver.See the (Fig.11.)

2、If installing with rope hangers (sold separately), loop the ropes around the flanges and tighten the rope to secure the fan.See the (Fig.12.)

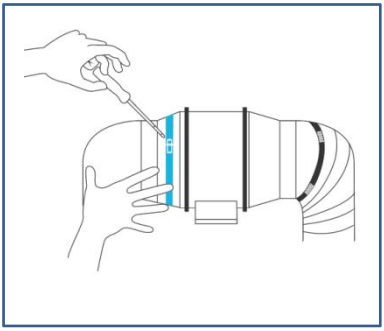

Fig.11.

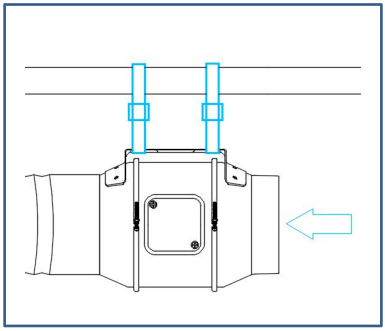

Fig.12.

DIMENSION AND SPECIFICATION

1、Dimension

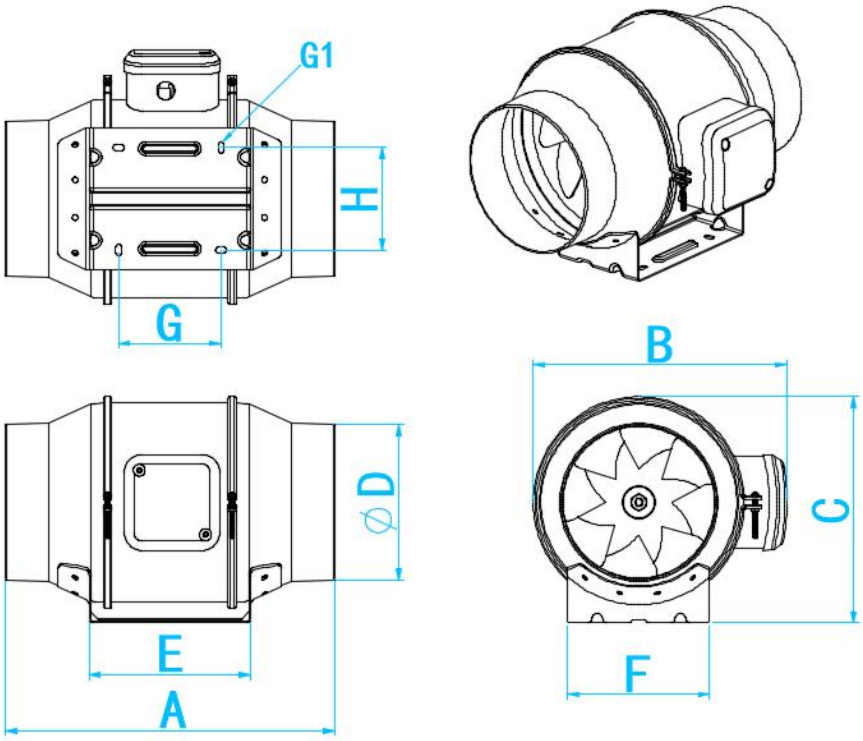

Unit: mm

Model	A	B	C	ØD	E	F	G	G1 LONG HOLE	H
GX-04-100	302	215	187.5	Ø98	142	119	92	10X5	82
GX-06-150	309	238	212	Ø145	151	133	96	10X5	96
GX-08-200	302	258.5	233	Ø197	172	149	106	10X5	112

POWERING AND SETUP

Step 1:

Plug the duct fan's 3-pin connector into the universal controller's out 1 or out 2 port signified by the fan/power symbol.Plug the sensor's 4-pin connector into the controller's sensor signified by the controller symbol.See the(Fig.13.)

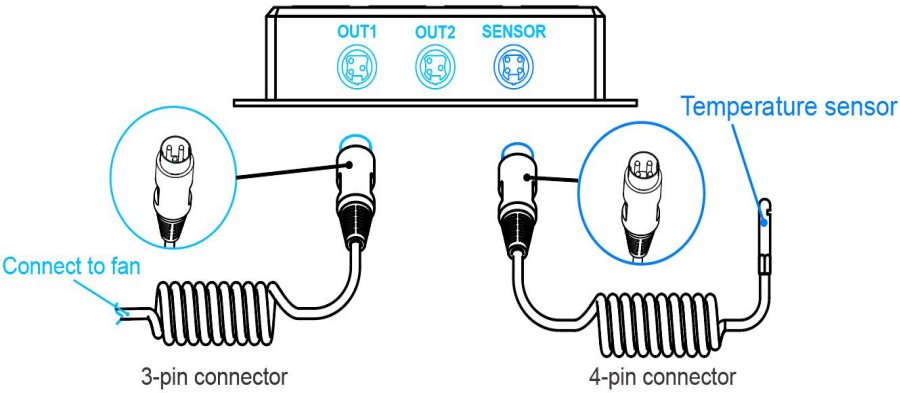

Fig.13.

Step 2:

Lastly, to power both the fan and controller, plug the fans power cord into an AC power outlet.See the(Fig.14.)

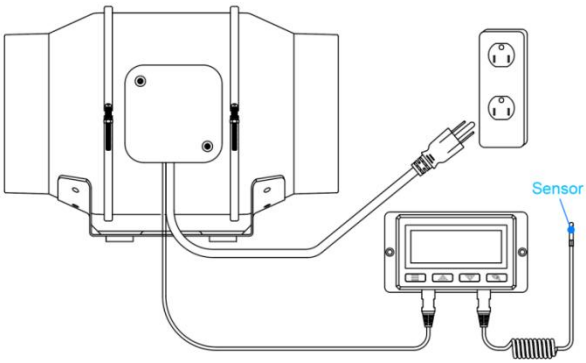

Fig.14.

Tips:

Smart controllers with EC motors can support two fans of any size. The two EC-motor fans must be plugged in to an outlet to power the fans and the controller. See images below.

EC MOTOR

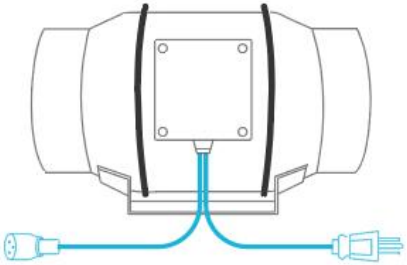

EC models have two cords with a connector and a three-pronged plug

Dual Connection

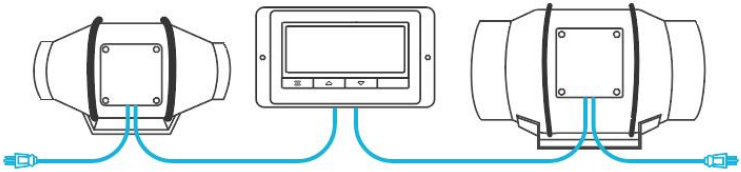

EC models can connect two fans of any size fan.

CLEANING

Step 1:

Remove the motor box from the mounting flange. (Refer installation steps 1 and 2 to learn how to of the mounting installation section to learn how to remove the motor box). (Fig.15.)

Step 2:

Use a damp cloth to clear the impeller and fan blades of any dust and debris. Remove the wind circle in between the motor box and input flange. (Fig.16.)

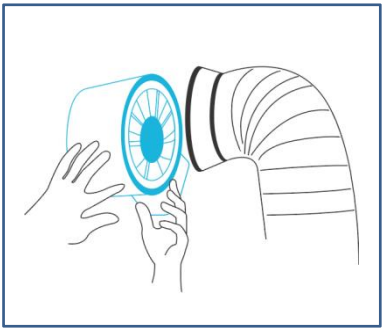

Fig.15.



Fig.16.

Step 3:

Clear the stator blades of any dust and debris on the opposite end. Clean the area inside the output and exhaust flanges. (Fig.17.)

Step 4:

Secure the motor box onto the mounting flanges. Refer installation step 2-3 to learn how to flanges. secure the motor box. (Fig.18.)

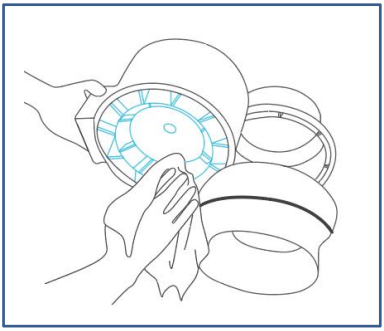

Fig.17.

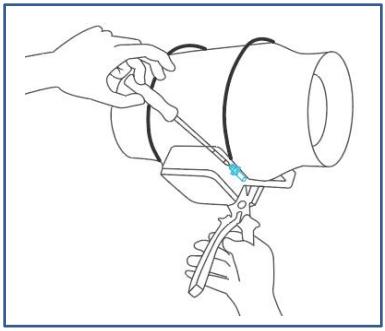

Fig.18.

PROGRAMMING

BUTTON DESCRIPTION

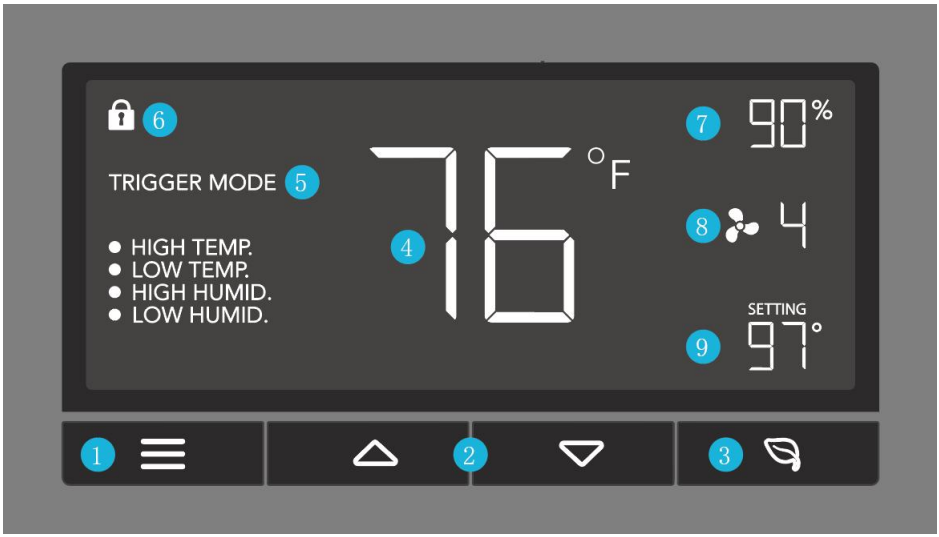

1. MODE BUTTON

Cycles through the controller's temperature/humidity programming: ON, OFF,TIMER, AUTO (4 triggers),and ALARM (4 settings).

2. UP / DOWN BUTTON

Adjusts the settings of the mode that you are in. Up button raises and down button lowers. Hold both to turn off triggers.

3. LEAF BUTTON

Turns the screen off while programs run in the background. Hold for two seconds to lock or unlock the LCD display.

4. PROBE TEMP

Displays the current temperature that the corded sensor probe is measuring. Shows "- -" if no probe is plugged in.

5. CONTROLLER MODE

Displays the mode that the controller is currently in.Pressing the mode button cycles through the modes.

6. ALERT ICONS

Displays the alerts and statuses from the controller, including the alarm and the screen lock.

7. PROBE HUMIDITY

Displays the current humidity that the corded sensor probe is measuring. Shows "- -" if no probe is plugged in.

8. FAN SPEED

Displays the current speed the fan is running at, or what speed it should be running at if no fans are plugged in.

9. SETTING

Displays the value you set for the current mode. Pressing the up or down button changes the value.

OPERATION DESCRIPTION

MODE SETTING

Pressing the Mode button will cycle through the controller's available programming modes and settings: ON Mode, OFF Mode, TIMER Mode, AUTO Mode (4 triggers), ALARM Settings (4 settings).

ON MODE

In this mode, the fan will heat continuously regardless of temperature or humidity. Use this mode to set the fan's maximum blowing strength, ranging from 0-10, when triggers are activated.



OFF MODE

In this mode, the fan will not run regardless of temperature or humidity. Pushing the up or down button will change the display's brightness, ranging in 1/2/3/A3. On setting A3, the display will dim its brightness down to 1 if the device is left unattended for 30 seconds. Holding the up or down button will change the display's units to F or C, respectively.



TIMER MODE

In this mode, pressing the up or down button will set the timer. The fan will ramp up to ON Mode's setting until the timer's clock runs out. It will begin spinning 5 seconds after the timer is set.

Leaving the timer mode while it's running will pause it until you return to this mode.



TRIGGER MODE: HIGH TEMPERATURE

In this mode, pressing the up or down button sets the high temperature trigger. The fan will activate if the probe's reading meets or exceeds this trigger.

It will gradually ramp up until it reaches the ON Mode's setting. If the probe's reading falls below your trigger, the fan will turn off. We recommend turning this trigger OFF when not in use during set up by holding the up and down buttons together.

You may set this trigger below the low temperature trigger to create a range where the fan is active.



> Note that this trigger can activate as long as you are in AUTO Mode, even if you are viewing a different trigger within AUTO Mode.

TRIGGER MODE: LOW TEMPERATURE

In this mode, pressing the up or down button sets the low temperature trigger. The fan will activate if the probe's reading meets or falls below this trigger.

It will gradually ramp up until it reaches the ON Mode's setting. If the probe's reading rises above your trigger, the fan will turn off. We recommend turning this trigger OFF when not in use during set up by holding the up and down buttons together.

You may set this trigger above the high temperature trigger to create a range where the fan is active.



Note that this trigger can activate as long as you are in AUTO Mode, even if you are viewing a different trigger within AUTO Mode.

TRIGGER MODE: HIGH HUMIDITY

In this mode, pressing the up or down button sets a high humidity trigger. The fan will activate if the probe's reading meets or exceeds this trigger.

It will gradually ramp up until it reaches the ON Mode's setting. If the probe's reading falls below your trigger, the fan will turn off. We recommend turning this trigger OFF when not in use during set up by holding the up and down buttons together.

You may set this trigger below the low humidity trigger to create a range where the fan is active.



Note that this trigger can activate as long as you are in AUTO Mode, even if you are viewing a different trigger within AUTO Mode.

TRIGGER MODE: LOW HUMIDITY

In this mode, pressing the up or down button sets the low humidity trigger. The fan will activate if the probe's reading meets or falls below the trigger.

It will gradually ramp up until it reaches the ON Mode's setting. If the probe's reading rises above your trigger, the fan will turn off. We recommend turning this trigger OFF when not in use during set up by holding the up and down buttons together.

You may set this trigger above the high humidity trigger to create a range where the fan is active.



Note that this trigger can activate as long as you are in AUTO Mode, even if you are viewing a different trigger within AUTO Mode.

ALARM SETTING: HIGH TEMPERATURE

In this mode, pressing the up and down button sets a high temperature alarm. The alarm will sound and its icon will flash if the probe's reading exceeds the set temperature.

To activate the alarm, leave the alarm mode. The alarm will turn
OFF if the probe's reading falls below the trigger or if any button is pressed. You can also set the alarm OFF by holding the up and down buttons together.

You may set this alarm below the low temperature trigger to create an operating range.



Note that alarm triggers can only activate in AUTO, ON, or TIMER Mode. Please leave ALARM SETTING to arm the controller.

ALARM SETTING: LOW TEMPERATURE

In this mode, pressing the up and down button sets a low temperature alarm. The alarm will sound and its icon will flash if the probe's reading falls below the set temperature.

To activate the alarm, leave the alarm mode. The alarm will turn OFF if the probe's reading rises above the trigger or if any button is pressed. You can also set the alarm OFF by holding the up and down buttons together.

You may set this alarm above the high temperature trigger to create an operating range.



Note that alarm triggers can only activate in AUTO, ON, or TIMER Mode. Please leave ALARM SETTING to arm the controller.

ALARM SETTING: HIGH HUMIDITY

In this mode, pressing the up and down button sets a high humidity alarm. The alarm will sound and its icon will flash if the probe's reading exceeds the set humidity.

To activate the alarm, leave the alarm mode. The alarm will turn OFF if the probe's reading falls below the trigger or if any button is pressed. You can also set the alarm OFF by holding the up and down buttons together.

You may set this alarm below the low humidity trigger to create an operating range.



Note that alarm triggers can only activate in AUTO, ON, or TIMER Mode. Please leave ALARM SETTING to arm the controller.

ALARM SETTING: LOW HUMIDITY

In this mode, pressing the up and down button sets a low humidity alarm. The alarm will sound and its icon will flash if the probe's reading falls below the set humidity.

To activate the alarm, leave the alarm mode. The alarm will turn OFF if the probe's reading rises above the trigger or if any button is pressed. You can also set the alarm OFF by holding the up and down buttons together.

You may set this alarm above the high humidity trigger to create an operating range.



Note that alarm triggers can only activate in AUTO, ON, or TIMER Mode. Please leave ALARM SETTING to arm the controller.

FAHRENHEIT OR CELSIUS

To switch between Fahrenheit and Celsius readings, set the controller to OFF Mode. Hold the up button to switch to Fahrenheit (°F) and the down button to switch to Celsius (°C).

DISPLAY BRIGHTNESS

To adjust the brightness of the display, set the controller to OFF Mode, then press the up or down button to increase or decrease the brightness level. The brightness range is 1/2/3/A3.

TEMPERATURE CALIBRATION

To adjust the temperature that the probe sensor is measuring, press the MODE and UP button simultaneously. This can be done while the controller is any mode. The calibration cycle ranges from -8°F to 8°F (or -4°C to 4°C). You may use this setting to match the controller's temperature reading with your thermostat's reading.

HUMIDITY CALIBRATION

To adjust the probe sensor's humidity reading, press the MODE and DOWN button simultaneously. This can be done in any mode. The calibration cycle ranges from -8% to 8%.

CONTROLLER LOCK

To lock the controller and prevent accidental setting changes, hold the LEAF button for three or more seconds. While the display is locked, you will not be able to switch modes or adjust settings. You will only be able to put the controller in ECO display. Holding the LEAF button for three or more seconds will unlock the controller.

ECO-MODE

To turn off the LCD display, press the LEAF button. While the screen is off, all programs, settings, and alarms will run in the background. You can activate ECO Mode while the controller is locked. To exit ECO mode, press any button.

ALERT ICONS

The top left of the display shows the alert icons. Icons may flash when the controller signals an alert to tell you a particular function or alarm is being triggered.

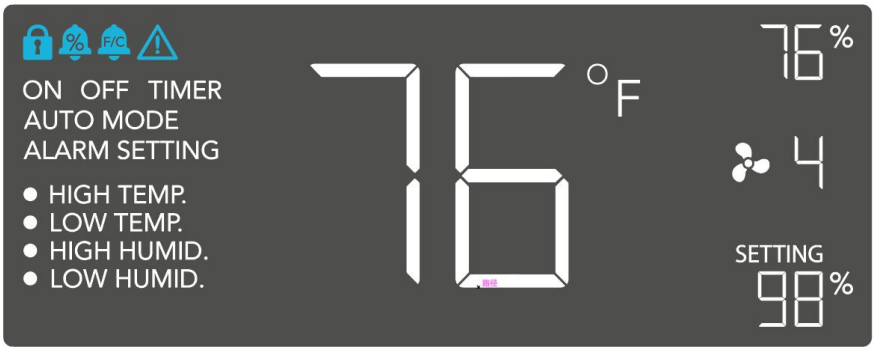

DISPLAY LOCK ALERT

This icon is visible when the controller has been locked. The icon will flash to alert you that the controller is locked if you try to change the mode or settings.

HUMIDITY ALARM ALERT

This icon will flash when the high or low humidity alarm has been triggered.

TEMPERATURE ALARM ALERT

This icon will flash when the high or low temperature alarm has been triggered.

CHECK FAN ALERT

This icon will flash when the fan's probe senses interference to its functioning. Check the fan for possible issues. If the fan is not heating up, please see the warranty page for replacement information.

FAQ

Q: I am missing my controller. It wasn't included in my package!

A: Please refer to page 7 for an image of what your controller should look like. Your controller should be neatly slotted in the box by this product manual.

Q: Where is the best place to position the sensor probe?

A: Place the sensor probe as close as possible to the hottest or most humid spot in your space.

Q: Do I need to remove the plastic cap from the probe?

A: Yes. You will need to remove the plastic cap so the probe can accurately read climate conditions.

Q: Can I mount this inline duct fan vertically?

A: Yes. The duct fan can be mounted in any orientation, including vertically.

Q: Will I be able to hardwire this fan to my own controller or thermostat?

A: We do not recommend hardwiring or splicing our fan's power wires. Such modifications may compromise electrical safety and will void this product's warranty.

Q: Do I need to use a power converter if I'm outside the US?

A: This product's voltage range is 120-240V AC. You may need a simple travel adapter to plug it into a foreign socket, or a power converter if your country uses a different voltage.

Q: Does the controller retain its settings after power is shut off?

A: Yes. If the controller's power is cut off and is powered on afterwards, your settings will remain.

Q: I'm not getting enough airflow even after setting the fan speed to 10. What can I do?

A: Bends in ducting will reduce your fan's CFM performance. To retain airflow, you may straighten the ducting and eliminate as many bends as possible.

ATTENTIONS

High-temperature places forbidden.

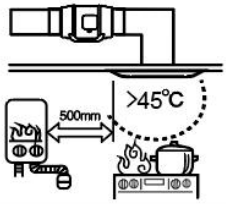

Places with overmuch lampblack or steam forbidden.

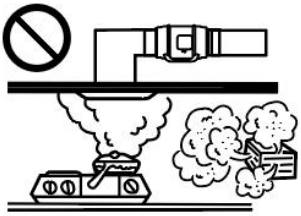

Please set up vent and spot inspection.

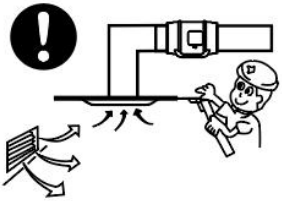

Installation height should be more than 2.3 m.

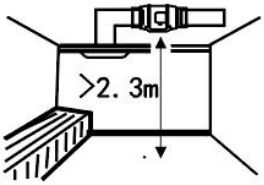

Below connection way of air duct is forbidden.

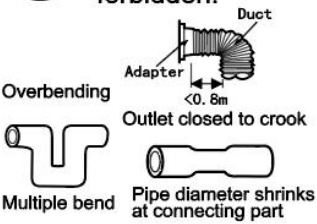

Should be firmly installed. Gradient installation forbidden.

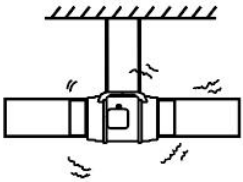

■Direct spraying or cleaning by water or other liquid is forbidden. This may cause short circuit or electric shock.
■Installation on window or outdoor is forbidden.

■When connected to power supply, all-pole power switch with more-than-3mm contact separation is necessary to be installed on the power supply circuit. Please do the connection according to the local electrical equipment technical regulations.
■Avoiding air reflux via open air flue or other fired equipment is necessary.
■Earthing device is necessary. Or will cause electric shock when breaking down or electric leakage occurs.

This product is subject to the provision of Europe an Directive 2012/19/EC. The symbol showing a wheelie bin crossed through indicates that the product requires separate refuse collection in the European Union. This applies to the product and all accessories marked with this symbol. Products marked as such may not be discarded with normal domestic waste, but must be taken to a collection point for recycling electrical and electronic devices.



Manufacturer： Bote electric appliance(Guangdong)Co.,Ltd
Address： 5TH floor,No.28,area 1,Sanlian Industrial Zone,Gulao Town,Heshan City,Jiangmen,Guangdong

MADE IN CHINA

VEVOR®

E-mail: CustomerService@vevor.com