H-3WP EX

WALL MOUNT SPEAKER



The H-3WP is a wall-mountable, outdoor 2-way speaker that provides horizontally-wide dispersion.

Key features

- 2-way design speaker
- Dome tweeters and neodymium magnet cone woofers
- Quality audio between the speakers as well as directly in front of each speaker unit
- 180° coverage pattern, eliminating dead audio spaces
- Either low impedance (8 Ω / 16 Ω) or high impedance (70 V / 100 V)
- Easy unobtrusive installation at above head-height
- Fire-resistant ABS according to UL94: V-0
- Weatherproof

Specifications

Enclosure	Sealed type
Rated Input	30 W (16 Ω, high impedance)
Power Handling	150 W (Continuous program/8 Ω) 50 W (Continuous pink noise/8 Ω)
Rated Impedance	8 Ω, 16 Ω 100 V line: 330 Ω (30 W), 670 Ω (15 W), 1.3 kΩ (7.5 W) 70 V line: 170 Ω (30 W), 330 Ω (15 W), 670 Ω (7.5 W), 1.3 kΩ (3.75 W)
Sensitivity	89 dB (1 W, 1 m) at installation in 1/2 free sound field (Measured by installing the unit in the center of a wall.)
Frequency Response	100 Hz - 20 kHz (-10 dB) at installation in 1/2 free sound field (Measured by installing the unit in the center of a wall.)
Crossover Frequency	4 kHz
Speaker Component	Low frequency: 10 cm cone-type x 2 High frequency: 2.5 cm dome-type (neodymium magnet)
Input Terminal	Detachable screw terminal, (+)/(-) 2 each (for bridging connection)
Cable Requirements	Solid cable, stranded cable: 0.2 - 2.5 mm^2 (AWG No.24 - 14)
Water Protection	IPX4
Installation Environment	Indoor installation, under-eave installation(*1)
Finish	Enclosure: Fire-resistant ABS resin, black Front frame: Fire-resistant ABS resin, off-white, paint Punched net: Steel plate (zinc plating), off-white, powder coating Base frame: Stainless steel
Dimensions	295 (W) x 318 (H) x 129 (D) mm
Weight	3.3 kg
Included Accessories	Front grille x 1, Base frame x 1, Electrical box mounting screw x 1 set
Recommended Electrical Box	2-gang type

(*1) Avoid installaing the speaker in locations close to the seashore or in indoor swimming facilities that are not well ventilated. In such locations, the bracket may be vulnerable to corrosion, eventually allowing the speaker to fall resulting in personal injury.

Dimensions

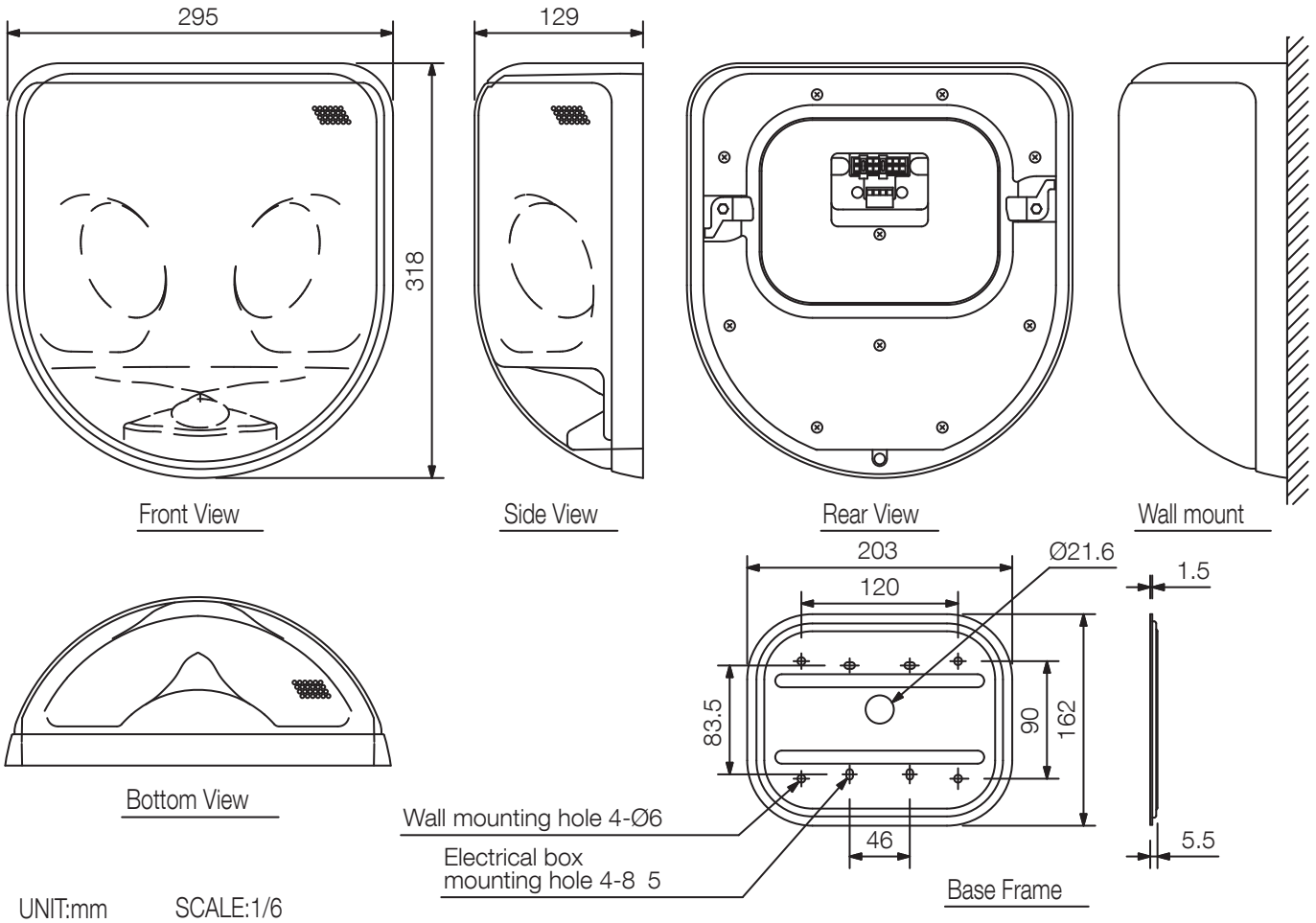
295
318
Front View
129
Side View
Rear View
Wall mount
Bottom View
203
120
Ø21.6
1.5
83.5
90
162
46
5.5
Wall mounting hole 4-Ø6
Electrical box
mounting hole 4-8 5
Base Frame
UNIT:mm
SCALE:1/6

A&E specifications

The speaker shall be a two-way, sealed enclosure suitable for wall-mounting. The speaker shall have an external appearance that is visually pleasing and blends well with surrounding building architecture and fixtures. Speakers requiring visible external mounting brackets shall not be acceptable. The loudspeaker shall utilize high quality components with Neodymium magnets for high power handling. The high frequency component shall be a 1" dome tweeter and the low frequency components shall be dual 4" cone woofers. The speaker shall be compatible with low and high impedance speaker systems and shall include a built-in 70.7/100 V matching transformer with the following selectable tap settings: 30 W, 15 W, 7.5 W, 3.75 W (70.7 V) and 30 W, 15 W, 7.5 W (100 V). The speaker shall also have selectable impedance settings of 8 ohms and 16 ohms. The output sound pressure level at a distance of 1 m with 1 W of input power applied shall be 89 dB SPL. The rated power handling (Continuous Program) shall be 150 W at 8 ohms and 30 W at 16 ohms or with matching transformer. The speaker shall have a frequency response from 100 to 20k Hz. The speaker shall employ a high quality internal passive crossover circuit with a crossover frequency of 4k Hz with optimized filter slopes of -12 dB per octave low pass filter and -18 dB per octave high pass filter. The speaker shall include a removable terminal block connector, screw terminal type, with loop-through terminations and accept AWG #14 - #24. An internal protection circuit shall prevent damage to the high frequency component in an overload condition. Once activated, the circuit shall reduce the input signal and reset automatically after approximately ten seconds once overload condition is removed. The speaker grille material shall be rolled steel plate (H-3) / stainless steel (H-3WP) with a paintable white finish. The speaker enclosure shall be fire-resistant ABS resin with UL94:V-0 rating. Dimensions shall be 11.6” x 12.5” x 5.1” (295 x 318 x 129 mm) and weight of 7.3 lbs. (3.3 kg).
The loudspeaker shall be TOA model H-3 / H-3WP.