**Prof. Dr.-Ing.
Reinhard Grundmann,
Aachen**

**Friedrich Schönholtz †,
Bad Hersfeld**

**Revised by Dipl.-Ing. (FH)
Herbert Eidam, Bad Hersfeld
and Dipl.-Ing.
Bernd Rahn, Berlin**

Elementary Fan Technology

The present „Fan Primer“ is aimed at contractors and operators.

Process equipment today would be inconceivable without fans and pumps. Fans are indispensable for conveying gas mass flows, and they perform essential functions in diverse process environments. A basic understanding of fan technology is therefore vital for contractor and operator. It is the intention of this „Fan Primer“ to impart the requisite fundamentals of fluid dynamics and technology as well as of key fan functions, designs and performance characteristics in a practical application context. The boundary conditions and performance limits of the individual fan types are also examined.

To the fan manufacturer or designer this publication will be of limited use. It cannot, and is not intended to, resolve any of the issues addressed in this highly specialized industry. Users from these fields are therefore referred to the relevant academic and trade literature.

Over and beyond the issues touched upon in this Fan Primer, TLT Turbo-GmbH's engineers will be glad to provide assistance with any problems this book cannot solve.

Table of contents

I. Introduction

1.1 What is a fan? . . . 2.2
1.2 Designs . . . 2.3

II. Basic fluid dynamics

2.1 Fluid flow . . . 2.4
2.2 Altitude formula . . . 2.4
2.3 State variables for ideal fluid flow/ Bernoulli's law . . . 2.4
2.4 Continuity equation . . . 2.5
2.5 Pressure loss . . . 2.5
2.5.1 Pressure loss due to surface friction drag . . . 2.5
2.5.2 Pressure loss due to form drag . . . 2.7
2.5.2.1 Impact loss . . . 2.8
2.5.2.2 Diffusion loss . . . 2.8
2.6 Characteristic curve of a system . . . 2.8
2.7 Bernoulli's law for real fluid flow . . . 2.9
2.8 Velocity distribution in the pipe or duct . 2.9
2.9 Pressure measurements . . . 2.10

III. Axial-flow fans

3.1 Structure and operation . . . 2.11
3.2 Velocity triangels . . . 2.11
3.3 Axial-flow fan designs . . . 2.13
3.3.1 Axial-flow fans for air-handling applications . . . 2.13
3.3.1.1 Guide vanes . . . 2.13
3.3.1.2 Impeller blade configuration . . . 2.13
3.3.2 Axial-flow fans for industrial uses/ axial blowers . . . 2.14
3.3.2.1 Axial-flow fan with adjustable impeller blades and fixed outlet guide vanes . 2.14
3.3.2.2 Axial-flow fan with adjustable inlet guide vanes and fixed impeller blades . . . 2.15
3.3.2.3 Speed-controlled axial-flow fans . . . 2.16
3.3.3 Airflow direction inside the fan . . . 2.17
3.3.4 Hub ratio . . . 2.17
3.3.5 Drive type . . . 2.17

IV. Centrifugal fans

4.1 Structure and operation . . . 2.19
4.2 Velocity triangels . . . 2.19
4.2.1 Backward curved blades . . . 2.19
4.2.2 Backward inclined straight blades . . . 2.19
4.2.3 Radially ending blades . . . 2.19
4.2.4 Forward curved blades . . . 2.19
4.3 Centrifugal fan configuration . . . 2.20
4.3.1 Type designations . . . 2.20
4.3.2 Inlet types . . . 2.21
4.4 Types and drive arrangements . . . 2.22
4.4.1 Casing orientation and direction of rotation . . . 2.22
4.5 Important custom and special designs . . . 2.23
4.5.1 Centrifugal plug-in fans . . . 2.23
4.5.2 Roof-mounting centrifugal fans . . . 2.24
4.6 Operation under dust and wear loads . . . 2.26
4.6.1 Conveying dust and fibrous media . . 2.26
4.6.2 Fan wear . . . 2.27

V. Fans as system components

5.1 Characteristic system/fan curves, proportionality law . . . 2.28
5.2 Dimensionless variables . . . 2.31
5.3 Selection criteria . . . 2.32
5.4 Parallel operation . . . 2.34
5.5 In-line/series operation . . . 2.34
5.6 Pressure measurement on fans . . . 2.35

VI. Speed control

6.1 Throttle control . . . 2.38
6.2 Blade pitch control . . . 2.39
6.3 Blade pitch adjustment . . . 2.39
6.4 Inlet vane control . . . 2.39

VII. Drive unit dimensioning

7.1 Motors . . . 2.40
7.2 V-belt drive . . . 2.40
7.3 Couplings . . . 2.40

VIII. Explosion protection on fans

8.1 Standards situations . . . 2.41
8.2 Product standard for fans . . . 2.42
8.3 Marking example . . . 2.42
8.4 Design notes . . . 2.43
8.5 Explosion protection of fans, illustrated for a direct-driven centrifugal fan . . . 2.43

IX. Installation and dimensioning notes

9.1 Free inlet . . . 2.44
9.2 Free outlet . . . 2.44
9.3 In-duct fans . . . 2.46
9.4 Parallel and in-series operation . . . 2.47

I. Introduction

1.1 What is a fan?

2 A fan is a turbomachine converting energy into the fluid flow of a gaseous medium. The purpose of a fan is to convey a volume of a gaseous medium (usually air) through a system (unit). As the system resists the flow of this medium, the fan must overcome this resistance by generating a pressure head (total pressure difference). It is usually the core machine in the system it serves.

The following key variables play a role in fan specifications:

Symbol	Formula	Dim.	Name
$\dot{V}$	c_m*A	m^3/s	Volume flow
c_m	$\dot{V}/A$	m/s	Mean velocity
A	$\pi/4\ (Da^2 - Di^2)$ [ring surface area in the case of axial-flow fans!]	m^3	Cross-sectional area
Da		m	Outside diameter
Di		m	Inside diameter
v	Di/Da	–	Hub ratio
p_{t1}		Pa	Inlet pressure
Δp_t	$p_{t2} - p_{t1}$ o. $\Delta H \cdot \rho$	Pa	Total pressure difference
ϱ		kg/m^3	Density
κ	c_p/c_v	–	Exponent *.)
f	$\frac{\kappa}{\kappa-1} \cdot \frac{p_1}{\Delta pt} \cdot \left[\left(\frac{p_1+\Delta p_t}{p_1}\right)^{\frac{\kappa-1}{\kappa}} - 1\right]$	–	Compression factor *.)
H		m	Gas column head
P_{fluid}	$\frac{V \cdot \Delta p_t \cdot f}{p}$	W	Fluid power
P	P_{fluid}/η	W	Shaft power
η	P_{fluid}/P	–	Efficiency
n		rpm	Rotational speed
u	$\pi \cdot D \cdot n/60$	m/s	Blade tip speed
φ	c_m/u_a	–	Capacity coefficient
ψ	$\frac{2 \cdot \Delta p_t \cdot f^*}{U_a^2 \cdot \rho}$	–	Pressure coefficient
1,2,a,i,m			Indices

*) Neglected in ventilation and air-condition technics (Δp_t < 2500 Pa)

1.2 Designs

The first and foremost objective of every fan manufacturer in dimensioning his product for a given application is to maximize its efficiency in order to reduce energy costs. Basically, there exist four fundamentally different fan designs named according to the direction of the flow line through the impeller.

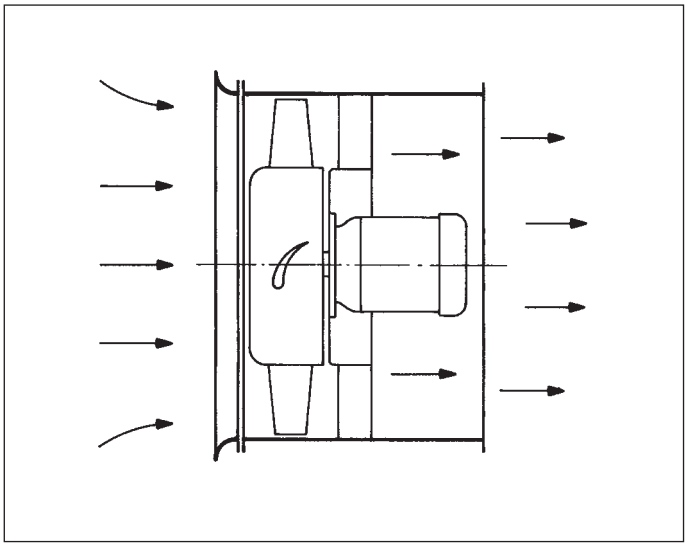

a) Axial-flow fan
A straight flow line extends axially through the impeller.

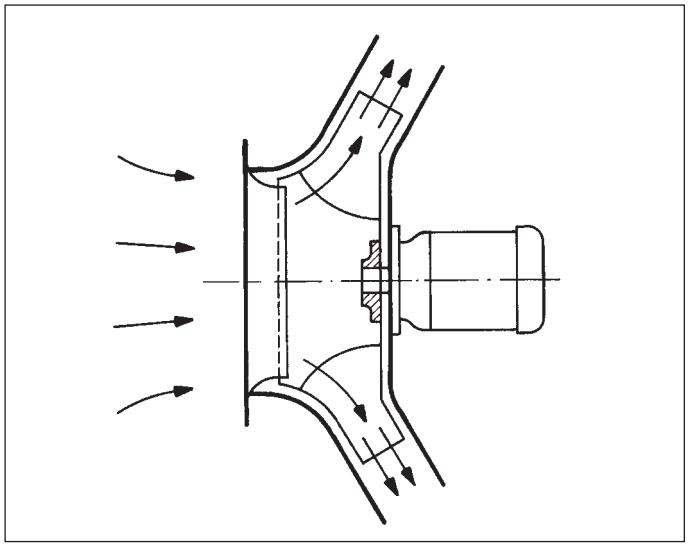

c) Semi-axial flow fan (Bifurcated fan)
A hybrid between axial and centrifugal designs, this fan is characterized by a curved flow line through the impeller.

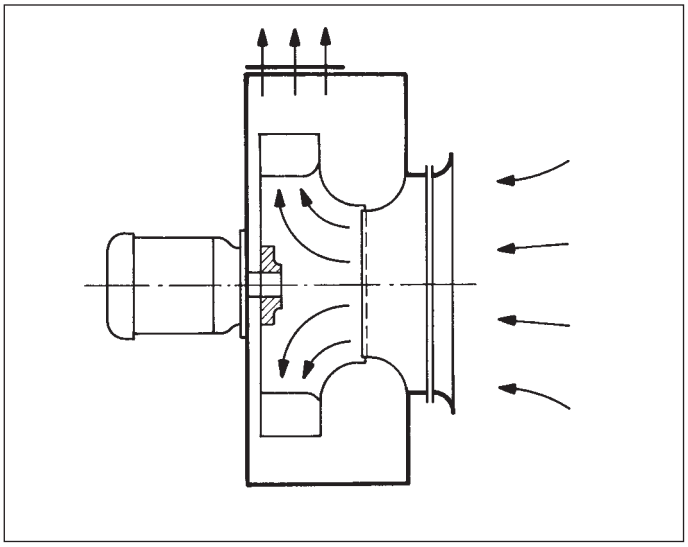

b) Centrifugal fan
A straight flow line extends radially through the impeller (vertical to the fan axis.

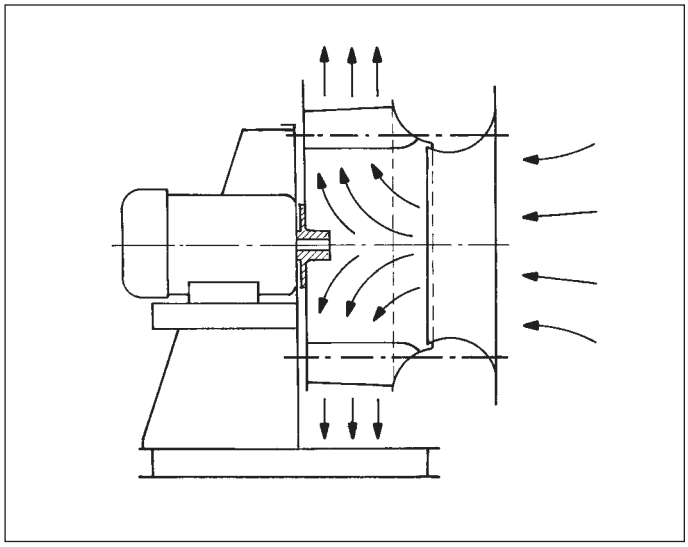

d) Centrifugal fans without spiral casing (centrifugal plug-in fan)
Its flow line extends in virtually the same direction as in a centrifugal unit with spiral casing.

II. Basic fluid dynamics

2.1 Fluid flow

2 The fluid conveyed by a fan is in its gaseous state. In ventilation and air-conditioning systems, air is the conveyed medium. Its characteristics are described by several state variables and material properties. The most important state variables are given below.

Temperature T
measured in K (degrees Kelvin)
Pressure p measured in Pa

The most important material properties are the following:
Gas constant R
measured in Nm/kg K
Viscosity v measured in m^2/s
Density ϱ measured in kg/m^3

The relationship between state variables and material properties is expressed by the gas equation:

$$\varrho = \frac{p}{R \cdot T}$$

The gas constant of air is
$R = 287\ Nm/kg \cdot K$

The absolute temperature T starts at -273°C = 0 K

Accordingly,+20°C is equal to 293 K

From the above, the density of air at 0°C and p = 101325 Pa (= 760 torr) can be calculated as

$$\varrho_0 = \frac{101325}{287 \cdot 273}\ kg/m^3 = 1{,}29\ kg/m^3$$

Pressure dependence of the air's density is low enough to be neglected, at least at the pressure differentials encountered in a ventilation and air-conditioning context. In other words, the air is deemed to be a „non-compressible" medium.

Temperature dependence of the air's density, on the other hand, needs to be taken into account. According to the gas equation, the following holds true for different temperatures at the same density:

$$\frac{\varrho_1}{\varrho_0} = \frac{T_0}{T_1} \quad \text{or} \quad \varrho_1 = \varrho_0 \frac{T_0}{T_1}$$

The stated reference values $T_O = 273$ K (= 0°C) and $\varrho_0 = 1{,}29\ kg/m^3$ give us an equation for calculating the air density at x°C :

$$\varrho_x = 1{,}29 \frac{273}{273 + x}\ kg/m^3$$

For example: What is the density of air at 20°C?

$$\varrho_{20} = 1{,}29 \frac{273}{273 + 20}\ kg/m^3 = 1{,}2\ kg/m^3$$

Note:

The above values apply to dry air. The density of moist air is slightly lower. However, this influence is generally negligible.

2.2 Altitude formula

If a fan is to be installed not at sea level but in the mountains at an altitude H, the density of air at that altitude has to be determined. By international agreement, the pressure Pa at altitude H is calculated as

$$p_a = p_{ao} \cdot \left[\frac{287 - 0{,}0065 \cdot H}{287}\right]^{5{,}255}$$

where p_{ao} is the pressure at sea level and H is the altitude (in meters) above sea level.

Density may then be determined for the stated temperature according to the gas equation.

2.3 State variables for ideal fluid flow / Bernoulli's law

Flow of a fluid is described in terms of velocity, static pressure and elevation. These are the „state variables" which are interrelated according to Bernoulli's law.

Under this law, the sum of velocity, pressure and elevation energies are equal at any point of the flow (assuming stationary flow*)), i.e.

$$\frac{\varrho}{2} c^2 + p_s + \varrho \cdot g \cdot h = \text{constant}$$

where:

ϱ = density in kg/m^3

c = mean flow velocity in m/s

p_s = static pressure in Pa

g = acceleration due to gravity
= 9,81 m/s^2

h = elevation in m

In the case of an airflow, the elevation term of the $\varrho \cdot g \cdot h$ equation (i.e. the weight of the air column) can be neglected due to its marginal value. This gives us the following expression:

$$\frac{\varrho}{2} c^2 + p_s = \text{constant}$$

$\frac{\varrho}{2} c^2$ is referred to as the velocity head or dynamic pressure pd, while the sum of the dynamic and static pressure is called total pressure p_t.

$$p_t = \frac{\varrho}{2} c^2 + p_s = p_d + p_s$$

*) A flow is deemed to be stationary if the state variables do not vary with time at a given point.

Bernoulli's law, in this form, states that total pressure is the same at any point of the flow. This may be illustrated by a simple example, viz. the flow of a medium through a duct of varying cross-section.

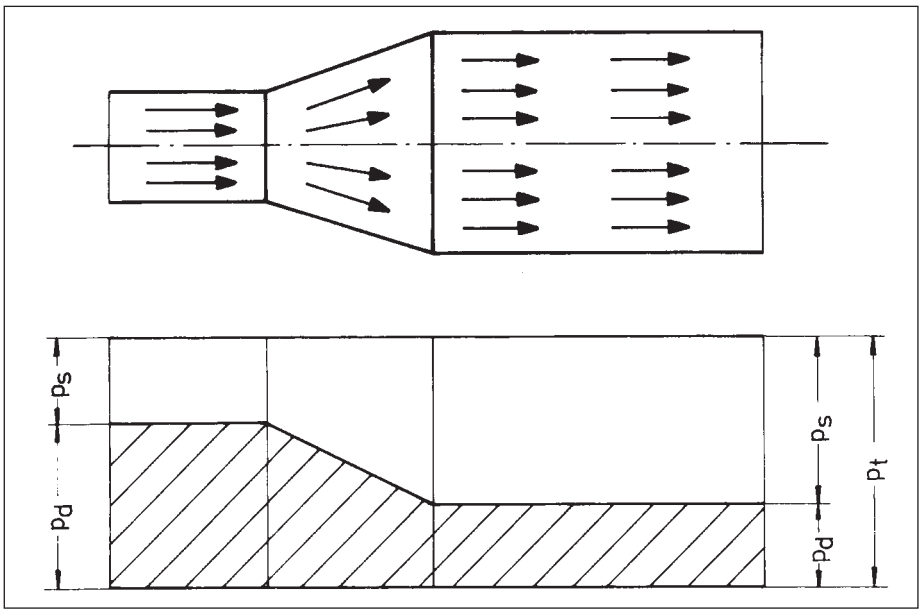

2.4 Continuity equation

The second basic equation of interest in this context is the continuity equation. It states that in a system with a single inlet and a single outlet (i.e. an unbranched duct), volumetric flow rate will be identical at all points.

$$\dot{V} = c \cdot A = \text{constant}$$

where:

$\dot{V}$ = volume flow in m^3/s

c = flow velocity in m/s

A = cross-sectional area

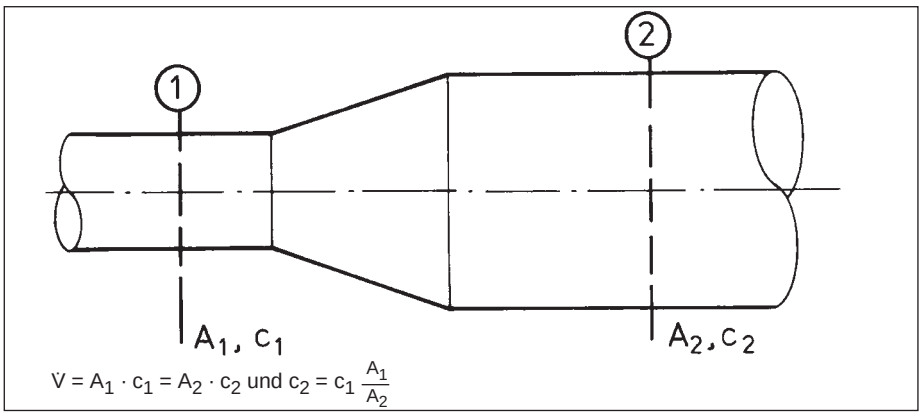

$\dot{V} = A_1 \cdot c_1 = A_2 \cdot c_2$ und $c_2 = c_1 \frac{A_1}{A_2}$

2.5 Pressure loss

Unlike their ideal counterpart, real fluid flows are subject to pressure losses. In a real-life system, these losses must be added to the load which the fan is required to overcome. A distinction is made between two types of resistance, or drag:

a) surface friction drag
b) form drag (also referred to as pressure drag)

2.5.1 Pressure loss due to surface friction drag

As its name implies, this is a pressure loss due to friction encountered by the airflow. It is calculated as follows:

For circular tubes:

$$\Delta p_v = \lambda \cdot \frac{l}{d} \cdot p_d$$

Δp refers to a pressure difference - in this case, it stands for the pressure difference between two points of the duct set apart by a distance l.

For ducts of any cross-section:

$$\Delta p_v = \lambda \cdot \frac{l}{d_h} \cdot p_d$$

$$\text{with } d_h = 4\frac{A}{U}$$

where:

λ = friction coefficient (dimensionless)

l = duct length in m

d = duct diameter

d_h = hydraulic diameter in m

A = cross-sectional area in m^2

U = wetted circumference in m

Examples: a) Rectangular duct having the sides a and b.

$$d_h = \frac{4ab}{2(a+b)} = \frac{2ab}{a+b}$$

$$\Delta p_v = \lambda \frac{l(a+b)}{2ab} p_d$$

2

b) Circular duct having the diameters d_1 and d_2:

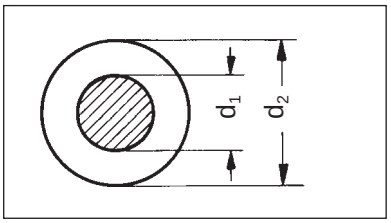

$$d_h = \frac{4\frac{\pi}{4}(d_2^2 - d_1^2)}{\pi\,(d_1 + d_2)} = d_2 - d_1$$

$$\Delta p_v = \lambda \frac{l}{d_2 - d_1} p_d$$

Values of λ are taken from diagrams, e.g. Moody diagrams. They depend on the roughness of duct walls and on the Reynolds number

$Re = \frac{c \cdot d}{\gamma}$ of the flow.*

Special diagrams exist in which the above relationships are already analyzed and expressed for a 1-meter-long section of ducting. It is assumed that the duct is circular. For rectangular ducts, the same diagrams are used but the duct diameter d is replaced with the relevant hydraulic diameter:

Pressure loss due to friction resistance (surface friction drag) in a straight and hydraulically smooth duct:

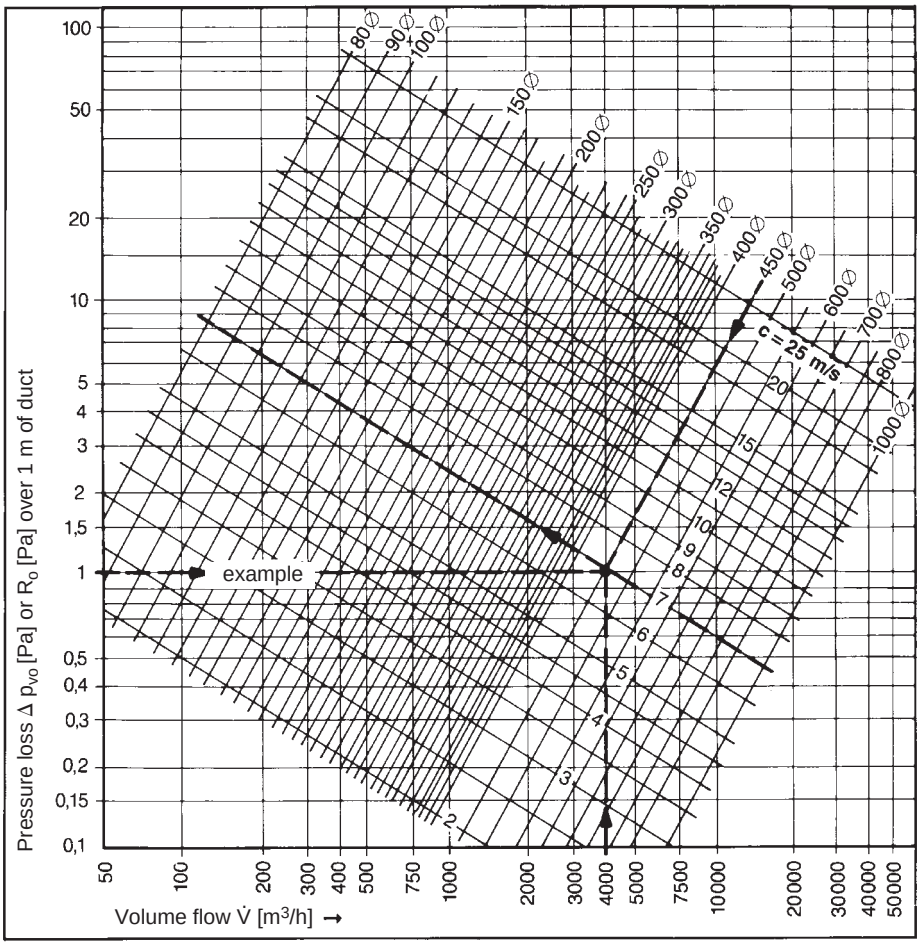

The above diagram of pressure losses per 1 m of ducting applies to hydraulically smooth ducts. For ducts with a less smooth finish, the Δp_{vo} value obtained from the diagram must be adjusted by determining the duct surface roughness k from the table of duct types, then obtaining the correction factor C_k from the diagram below.

For a duct with rough surfaces, it may thus be written:

$$\Delta p_v = C_k \cdot \Delta p_{vo}\ [\text{Pa}]\ \text{per 1m of duct}$$

Roughness k /m [mm]

Duct type	k
Plastic tubing	0,005
Asbestos cement tube	0,1
Steel pipe	0,1
Sheet metal duct	0,15
Flexible hose	0,7
Wooden ducting	2,5
Concrete ducting	0,8
Masonry ducts	4,0

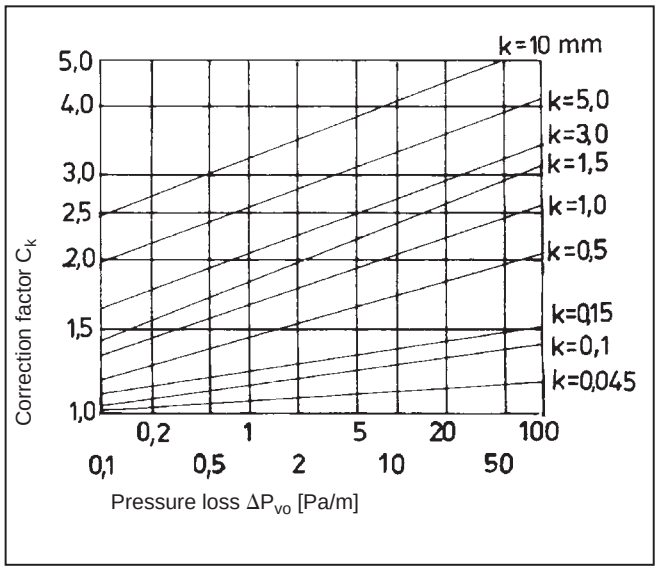

* γ is the kinematic viscosity of the fluid. For air at 20°C, $\gamma = 15 \cdot 10^{-6}\ \frac{m^2}{s}$

2.5.2 Pressure loss due to form drag

Pressure losses resulting from form drag may be attributable to various causes, e.g. duct elbows or tees, changes in cross-section, valves, or components such as air heaters, coolers, filters, etc.

Such pressure losses are calculated by the equation

$$\Delta p_v = \zeta \cdot \frac{\varrho}{2} c^2 = \zeta \cdot p_d$$

wherein ζ is referred to as the resistance (or drag) coefficient.

The appropriate values of ζ must usually be determined experimentally and will be provided by the component manufacturer.

An overview of key ζ values is given below.

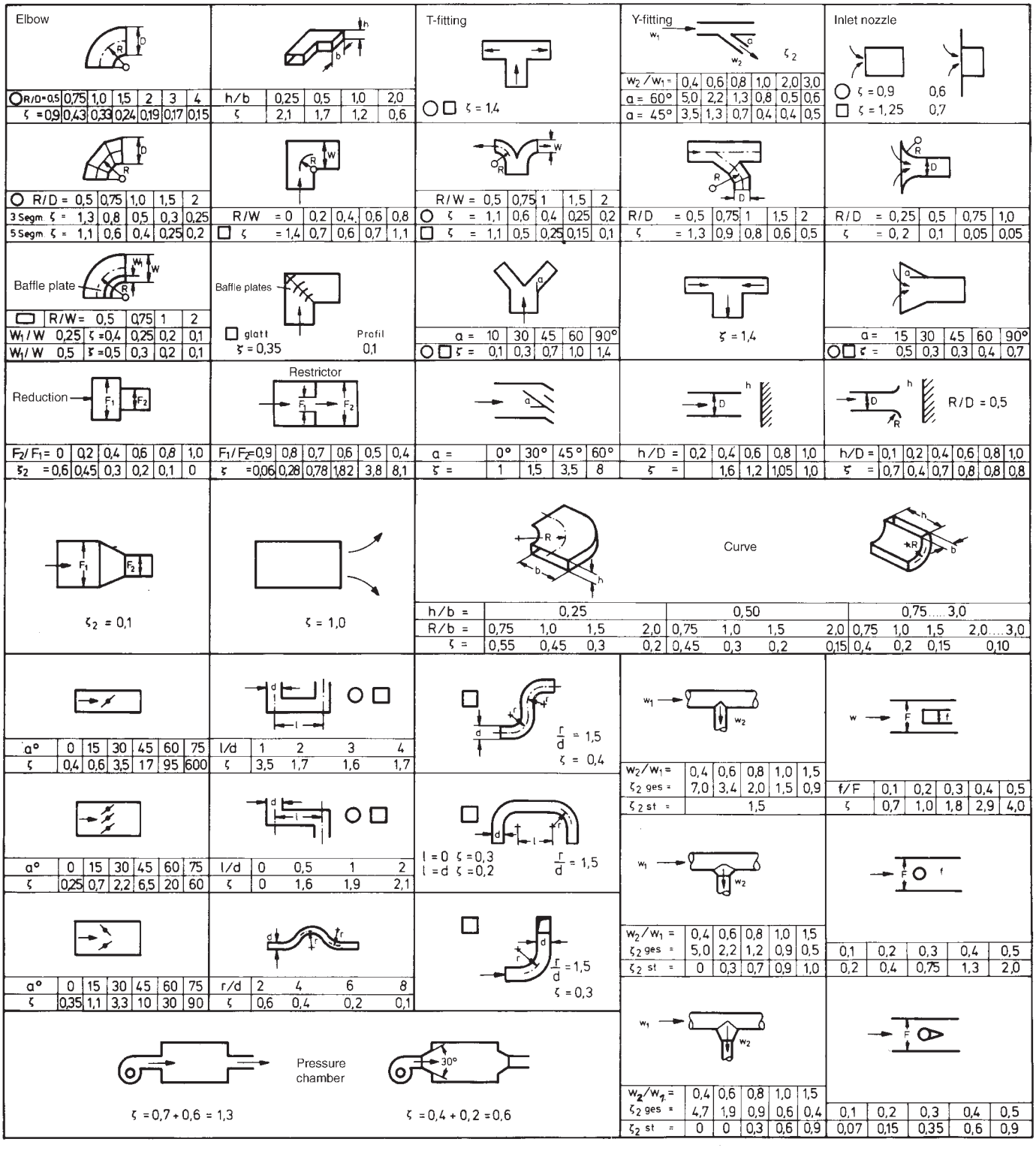

Source: Taschenbuch für Heizung und Klimatechnik [HVAC Technology Manual], Recknagel-Sprenger, 58th ed.

2

2.5.2.1 Impact loss

An important type of form drag which can be calculated with sufficient accuracy is the sudden deceleration of the flow which occurs where the duct expands abruptly.

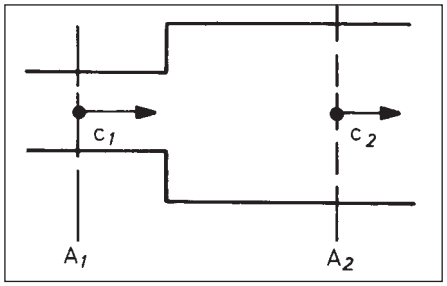

Pressure loss resulting from the decline in flow velocity from c_1 to c_2 is referred to as impact loss. It may be determined via the following equation:

$$\Delta p_v = \zeta \cdot \frac{\varrho}{2} (c_2 - c_2)^2 = \zeta \cdot \frac{\varrho}{2} c_1^2 \left(1 - \frac{A_1}{A_2}\right)^2$$

The ζ values for this impact loss are shown in Diagram 1 below. The resistance coefficient for a one-sided duct expansion is given in Diagram 2.

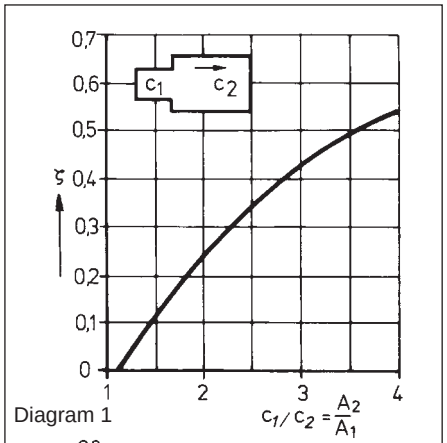

Diagram 1

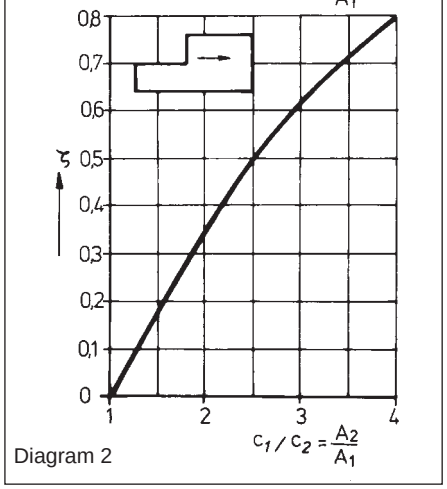

Diagram 2

2.5.2.2 Diffusion loss

When the change in cross-section occurs gradually instead of abruptly, a diffuser is said to exist in the duct. The function of a diffuser is to decelerate the fluid flow, thus converting dynamic into static pressure („pressure recovery"). The efficiency of this conversion depends closely on the opening angle α. When it exceeds 10 deg., flow ceases to adhere to the duct wall. Flow separation or 'stalling' is said to occur. This effect causes very substantial losses.

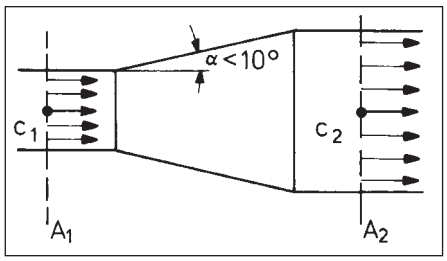

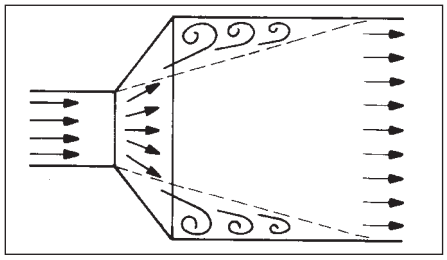

The following diagram shows ζ values for diffusers with various opening angles α.

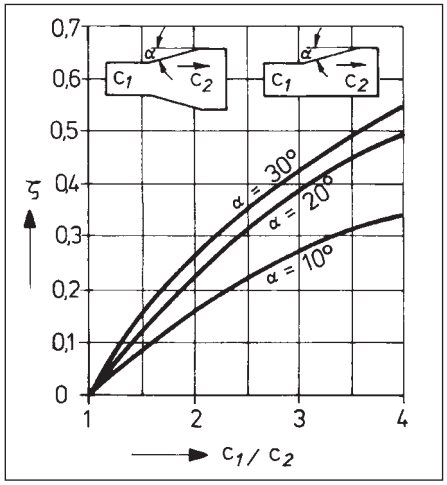

2.6 Characteristic curve of a system

The sum of all pressure losses occurring on a fan's inlet and outlet side gives the total pressure difference Δp_t for a given volume flow V. Total pressure difference is an important fan dimensioning and selection parameter. The value pair Δp_t and V also marks a point on the system's characteristic curve, which is sometimes referred to as its parabolic drag curve. Since with turbulent flow*) the losses are proportional to the square of the velocity or volume flow, a parabolic square curve is obtained when Δp_t is plotted over V. When this parabolic curve is drawn on log-log paper, it becomes a straight line having the gradient 2. By now taking the logarithm of $\Delta p_t = kV^2$, we get $\log \Delta p_t = 2 \log V + \log k$ where k is a system-specific constant.

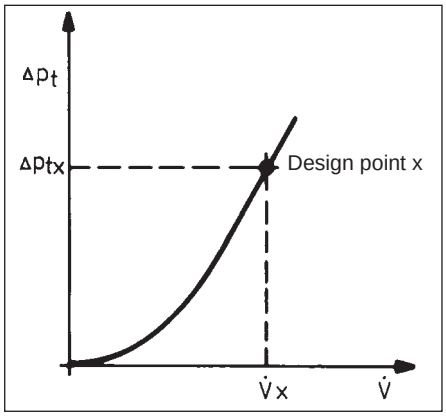

Linear representation of a system's characteristic curve

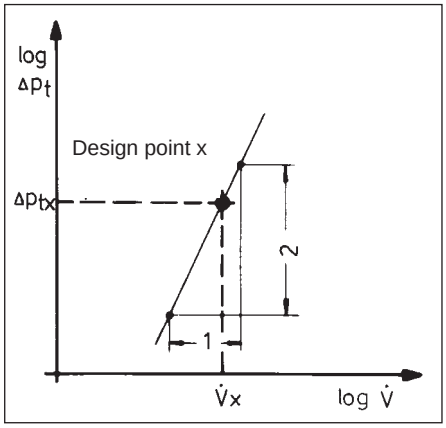

Logarithmic representation of a system's characteristic curve

*In some elements, such as filters, flow may be non-turbulent (low-turbulence displacement flow). Such elements must be considered separately in the calculations.

The linear graph has the advantage of appearing more familiar and therefore easier to read. Intermediate values can be quickly interpolated. On the other hand, changes in the system's characteristics are easier to construe in the diagram on log-log paper, since all characteristic curves form parallel straight lines having a gradient of 2.

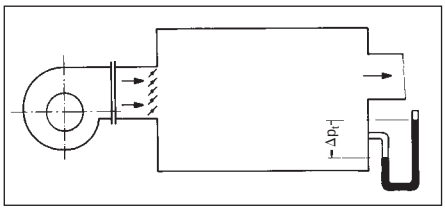

The parabolic curve for a given system need not necessarily pass through the zero point of the Δp -V diagram, but may also show the pattern illustrated in the following graph. This will be the case, e.g. if a fan is delivering its output into an overpressure chamber or pressure vessel. Its pressure difference against the atmosphere is Δp_1. The system's characteristic curve will then intersect the vertical Δp_t axis at the point Δp_1.

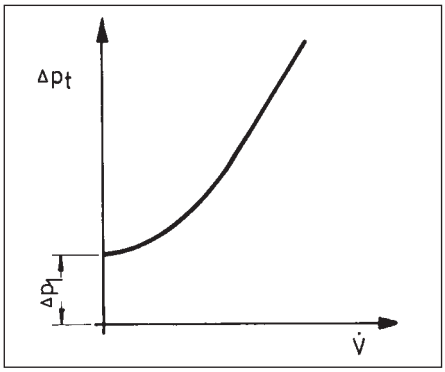

2.7 Bernoulli's law for real fluid flow

By inserting the loss terms for surface friction and form drag, Bernoulli's law can be extended to apply to real fluid flow. The following will then hold true for two points (1) and (2) of a flow if the elevation term is neglected:

$$\frac{\varrho}{2} c_1^2 + p_1 = \frac{\varrho}{2} c_2^2 + p_2 + \sum_{i=1}^{n} \zeta_i \cdot p_{d_i} + \sum_{i=1}^{m} \lambda \cdot \frac{l_i}{d_i} \cdot p_{di}$$

where

$\sum_{i=1}^{n} \zeta_i \cdot p_{di}$ = sum of all (n) form drag influences between the points (1) and (2),

and

$\sum_{i=1}^{m} \lambda \cdot \frac{l_i}{d_i} \cdot p_{di}$ = total of all (m) surface friction influences between the points (1) and (2)

2.8 Velocity distribution in the pipe or duct

Due to surface friction and flow adhesion to the duct walls, the velocity distribution across the duct diameter is not constant. Instead, a so-called velocity profile can be observed. Only downstream of an inlet nozzle flow is almost homogeneously distributed. Once it has passed a certain downstream length of ducting, the profile has formed.

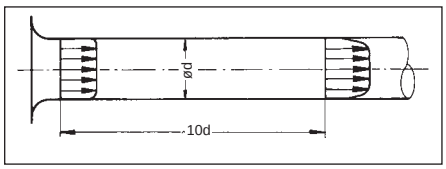

Formation of this velocity profile must be duly taken into account, particularly in measurements aimed to determine, e.g. volumetric flow rates.

Distorted velocity profiles and irregular pressure distributions across the duct diameter will occur downstream of in-duct baffles, obstacles or deflection points. Duct elbows or curves are good examples of this phenomenon.

Downstream of the deflection point the medium becomes detached from the walls, which results in a highly irregular velocity profile along the inside of the duct. Moreover, static pressure is higher on the outside than toward the center, where negative pressures may actually occur. This effect can be greatly diminished by installing baffles, which will also reduce the resistance (or drag) coefficient (refer to section 2.5.2).

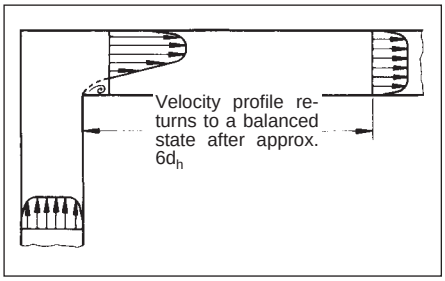

d_h = hydraulic diameter

2

2.9 Pressure measurements

The following sketches illustrate fundamental options for measuring pressures p_s, p_d and p_t.

p_s static pressure, i.e. pressure acting on a wall parallel to the direction of flow

p_d dynamic pressure, or velocity head

p_t total pressure, i.e. sum of static and dynamic pressures

Measurement on outlet side

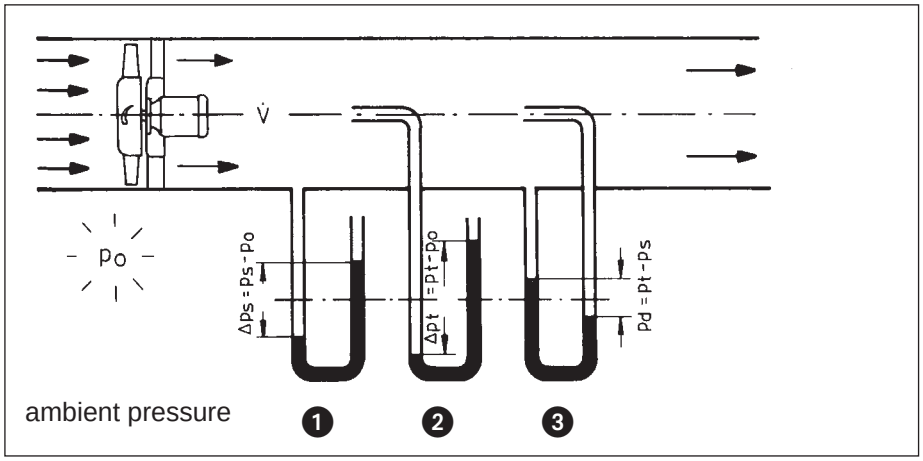

Measurement on inlet side

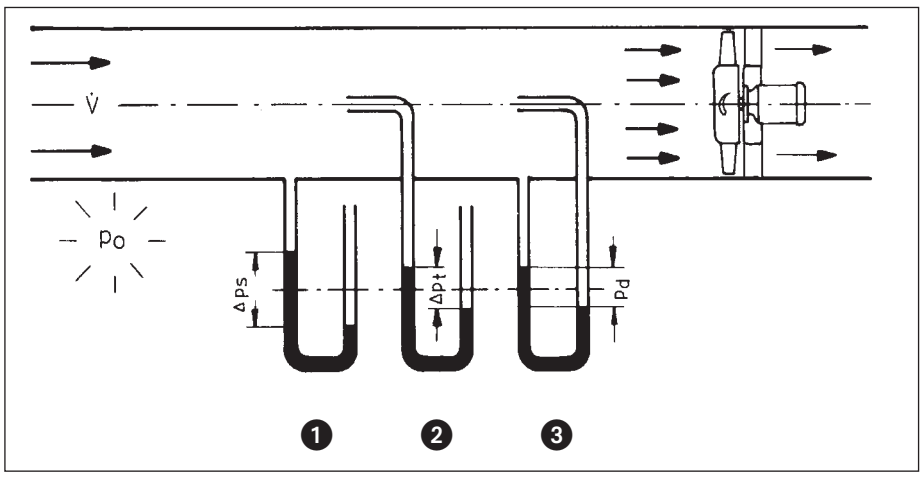

1. Static pressure ps is measured by means of a pressure gauge via a carefully deburred orifice in the duct wall. Best results are obtained by providing several such orifices along the circumference interconnected via a ring line.

2. Total pressure p_t can be measured with a 90° angle probe held frontally into the oncoming flow. Such probes are referred to as Pitot tubes.

3. Dynamic pressure is determined as difference between p_t and p_s. From $p_t = p_s + p_d$, it follows that $p_d = p_t - p_s$

   A device commonly used for dynamic pressure measurements is the Prandtl tube, which combines a Pitot tube with the functions of a static pressure probe.

To perform measurements within a system, it is best to select a point where a uniform velocity profile prevails. Measuring locations immediately downstream of elbows (refer to section 2.8), t-fittings or diameter expansions should be avoided since static pressure will not be constant across the duct diameter here and measurements will necessarily be flawed.

Today, standard pressure gauges will normally show pressures in Pa. Older devices may still give readings in mmWC (millimeters water column). 1 mmWC = 1 kp/m².

Conversion into the applicable system (SI units) is made according to the following formula:

1 mm WS = 1 kp/m² = 9,81 Pa ≈ 10 Pa

III. Axial-flow fans

3.1 Structure and operation

An axial-flow fan consists of bellmouth built into the casing, impeller, drive motor, and assembly of outlet guide vanes (or, in the case of axial-flow fans without outlet guide vanes, motor mounting bracket).

Large axial-flow fans are equipped with a diffuser on the outlet side to achieve a low-loss conversion of the high dynamic head into static pressure. Diffuser designs may vary, depending on whether or not the fan has an outlet guide system.

The purpose of the bellmouth is to produce a uniform velocity distribution in front of the impeller so that the impeller vanes will be exposed to the flow over their full surface area (refer to section 2.8). The conversion of energy takes place in the impeller blade channels. Both static and dynamic pressure is produced here. Downstream of the impeller the flow is intensely turbulent and swirling, i.e. the airflow exiting the impeller has a tangential velocity component.

To convert this useless component of dynamic pressure energy into its static equivalent, guide vane systems are employed. These vanes are arranged as a stationary ring in the shaft, either downstream or upstream of the impeller. Depending on their position, they are referred to as inlet or outlet guide vanes. They deflect the flow so that it will exit in an axial direction from the fan.

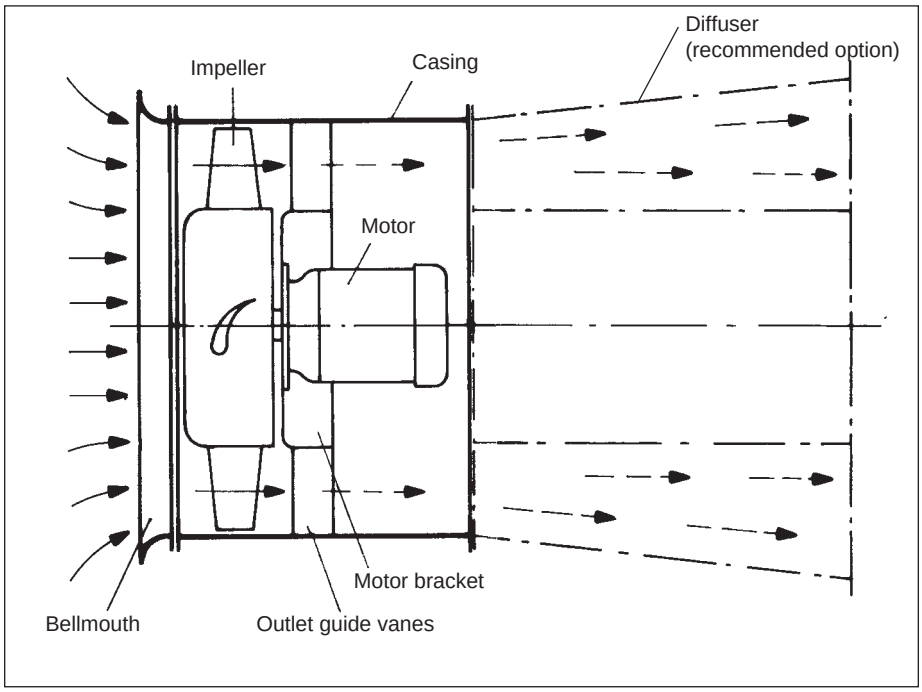

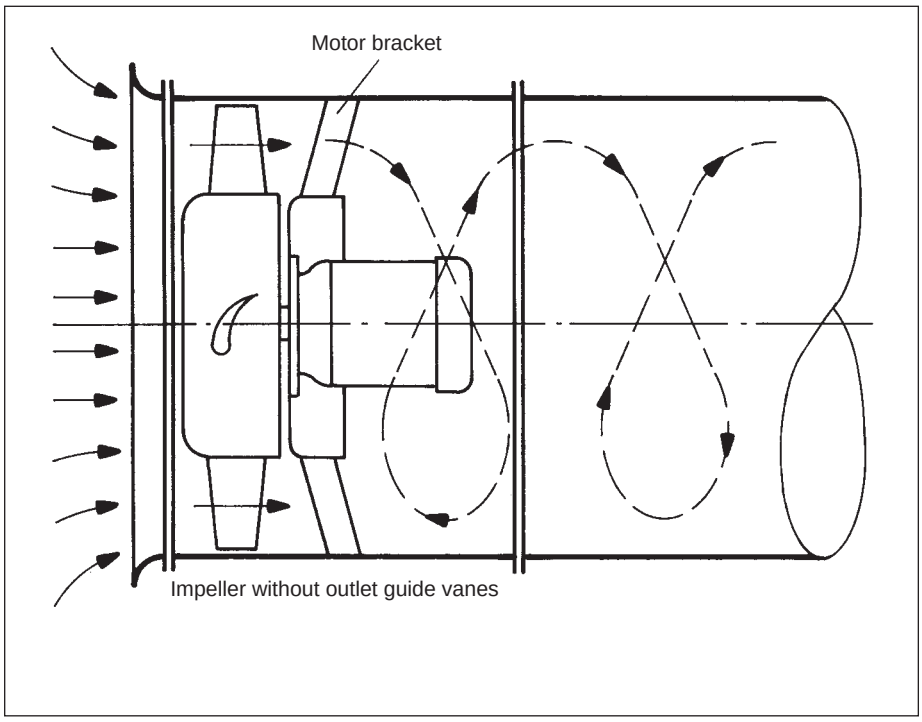

3.2 Velocity triangles

Flow conditions inside the fan can be graphically represented by means of velocity triangles. In these triangles, the following symbols and indexes are used:

Index 0 Entry into inlet guide vanes
Index 1_R Entry into impeller or exit from inlet guide vanes
Index 2 Exit from impeller or entry into outlet guide vanes
Index 3 Exit from outlet guide vanes

c Absolute velocity
w Relative velocity
u Impeller blade tip speed (circumferential velocity)

The absolute flow velocity c always is the vectorial sum of tip speed u and relative flow velocity w:

$$\vec{c} = \vec{u} + \vec{w}$$

c_{1R} is the swirl-free absolute entry velocity into the impeller (→ note the ring cross-section).

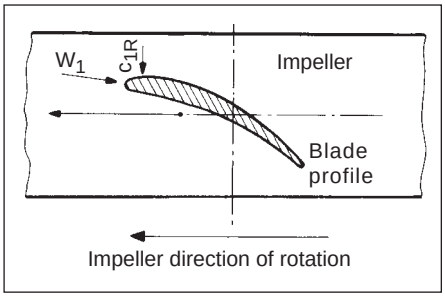

2

a) Axial-flow fan without guide vanes

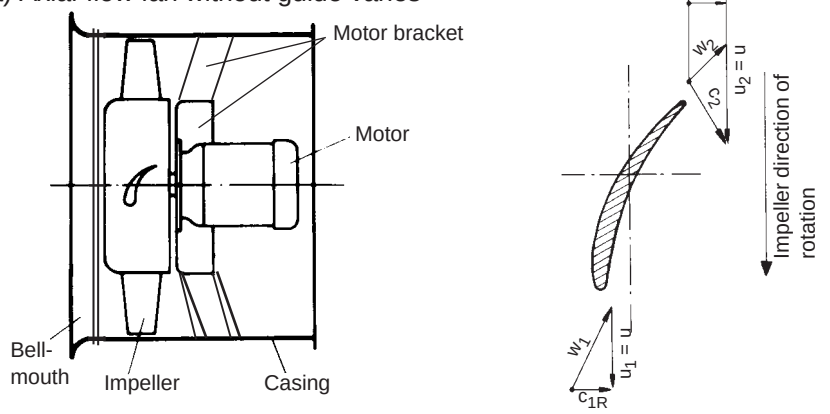

b) Axial-flow fan with outlet guide vanes

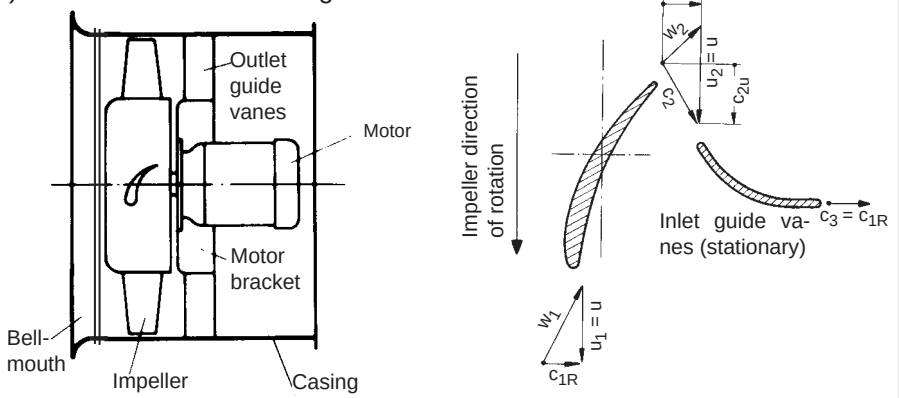

c) Axial-flow fan with inlet guide vanes

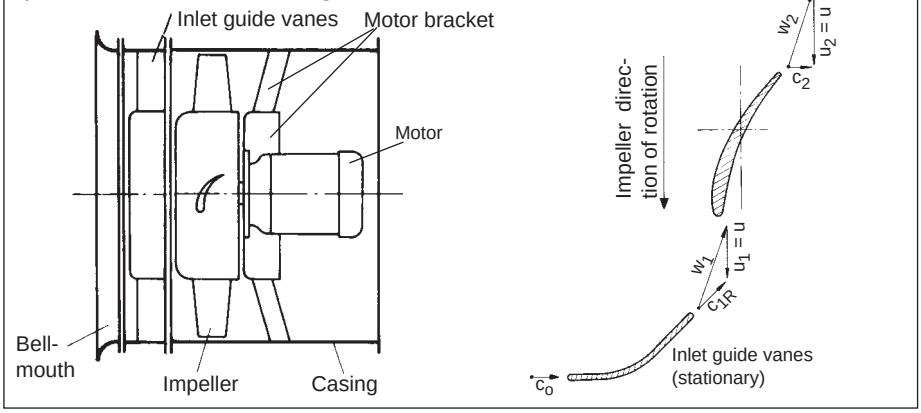

d) Counter-rotating axial flow fans

To boost pressure output, axial-flow fans can sometimes be used in pairs of counter-rotating units. Such a configuration requires two complete fans, each having its own motor, which are installed with their (counter-rotating) impellers immediately facing each other.

A counter-rotating fan system does not differ significantly in aerodynamic terms from a two-stage co-rotating fan configuration, although acoustic emission levels are much higher in the case of the former.

u is the peripheral impeller velocity (blade tip speed), which is related to the fan's rotational speed (rpm) according to the following function:

$$u = \frac{d}{2} \cdot \omega = \frac{d \cdot \pi \cdot n}{60}$$

where

ω = angular velocity tip speed of the impeller in s^{-1}

u = peripheral velocity in m/s

d = diameter of blade cross-section in m

n = impeller rotational speed in rpm

w_1 = relative velocity of approach flow on the blade. This variable is obtained by vectorial addition of inlet velocity c1 and peripheral velocity u, wherein the length of the vectors is equivalent to the amount of the velocity.

Change from w_1 to w_2 is a result of the curvature and shape of the blade channels.

c_2 is the absolute velocity at the exit of the blade cascade and hence, at the point of entry into the outlet guide vanes.

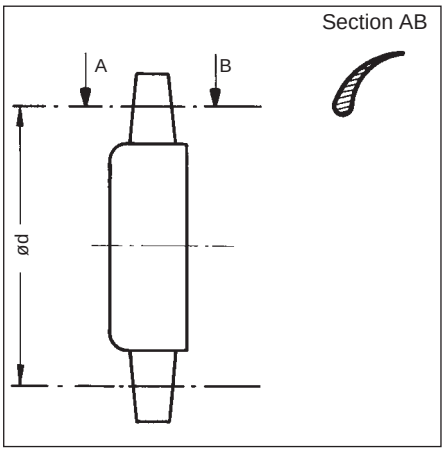

3.3 Axial-flow fan designs

Axial-flow fans can be classified according to diverse application and operating criteria.

3.3.1 Axial-flow fans for air-handling applications

3.3.1.1 Guide vanes

- Axial-flow fan without guide vanes
- Axial-flow fan with inlet guide vanes
- Axial-flow fan with outlet guide vanes

3.3.1.2 Impeller blade configuration

Axial-flow fans with fixed, non-adjustable impeller blades have only one constant characteristic curve for each rotational speed.

Axial-flow fans with pitch-adjustable impeller blades have multiple characteristic curves plotted as a function of the blade angle. They offer the advantage of being particularly adaptable to diverse operating conditions.

In a standard design with outlet guide vanes impeller blades are pitch-adjustable when the fan is stationary. For straightforward air-handling applications (i.e. low pressures), units without outlet guide vanes but with stationary impeller blade adjustment are also used.

Example:
Axial flow fan (blade pitch adjustable on stationary fan)

Manufacturer & type:
TLT-Turbo GmbH
Type AXN 12/56/800/M-D

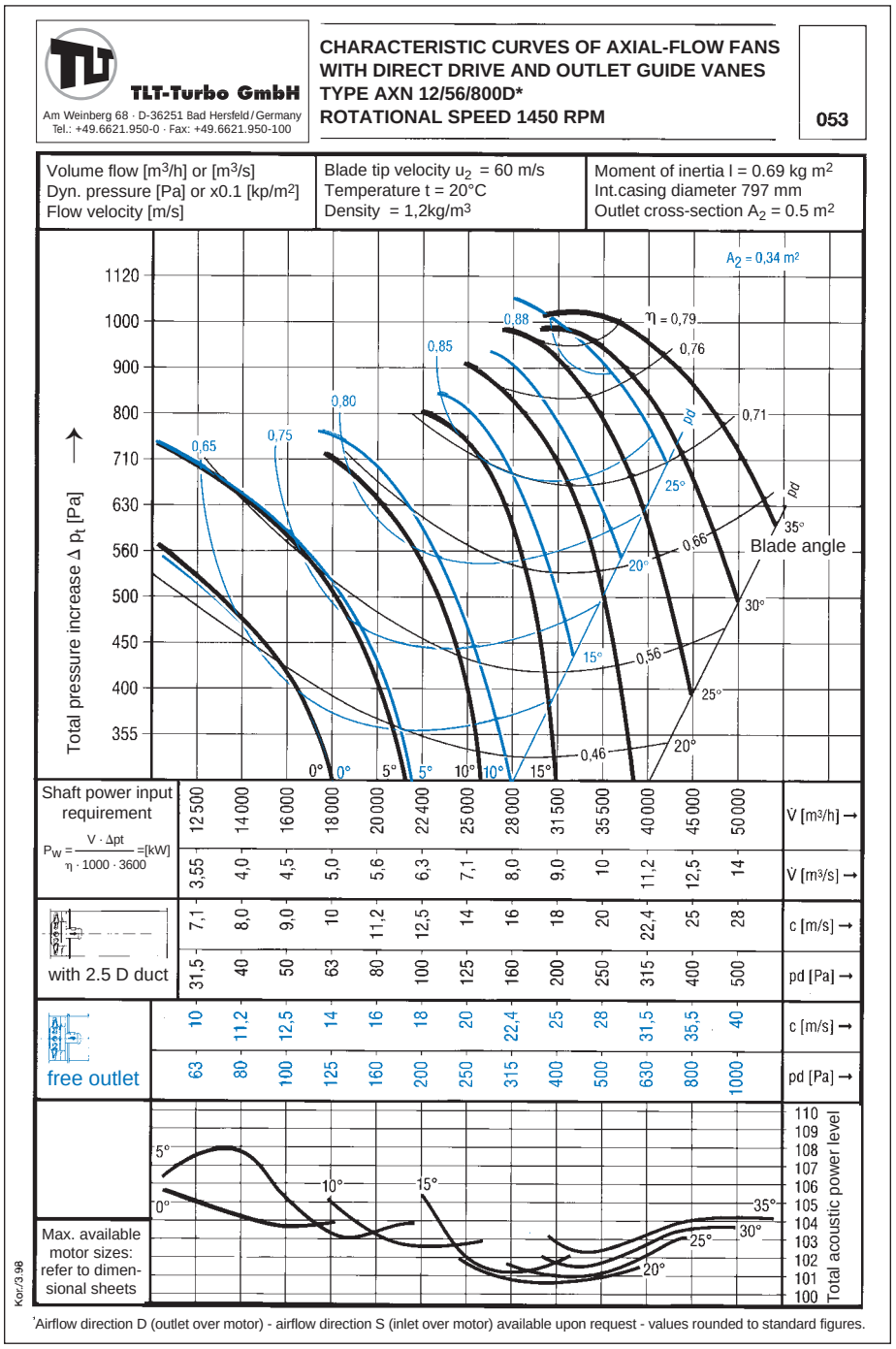

¹Airflow direction D (outlet over motor) - airflow direction S (inlet over motor) available upon request - values rounded to standard figures.

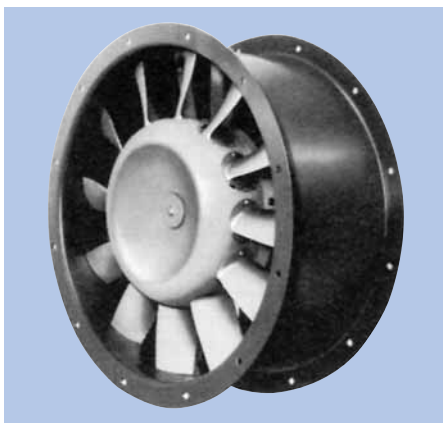

Type M-D

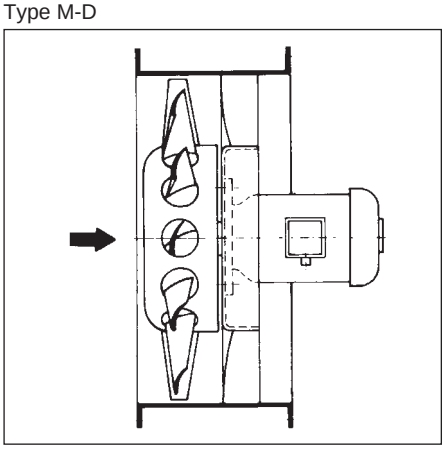

3.3.2 Axial-flow fans for industrial uses / axial blowers

2 For practical purposes, this fan category is subdivided into the following types:

3.3.2.1 Axial-flow fan with adjustable impeller blades and fixed outlet guide vanes

Such axial-flow fans are available

- with individually adjustable impeller blades, adjusted on the stationary fan
- with centrally adjustable impeller blades, adjusted on the stationary fan
- with jointly controlled impeller blades, adjusted under load (i.e. while the fan is running). This design offers certain advantages in controlling volume flows and provides a very broad operating range with good part-load characteristics.

Hydraulic blade pitch adjustment under load is now state-of-the-art technology.

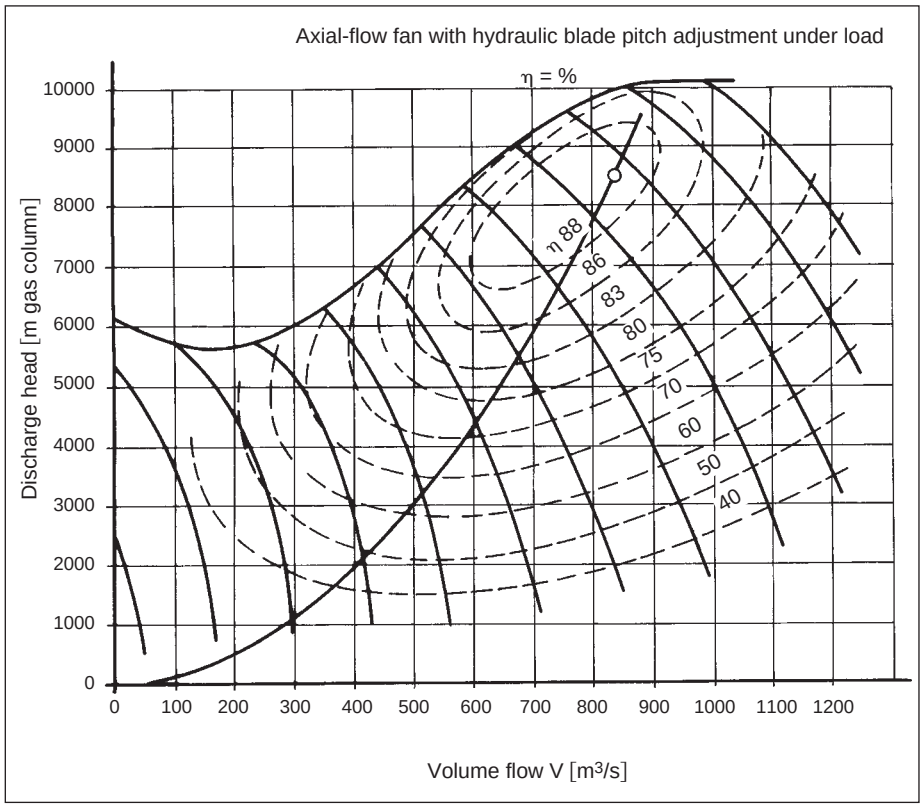

Example:
Axial-flow fan with impeller blade pitch adjustment

Manufacturer:
TLT-Turbo GmbH

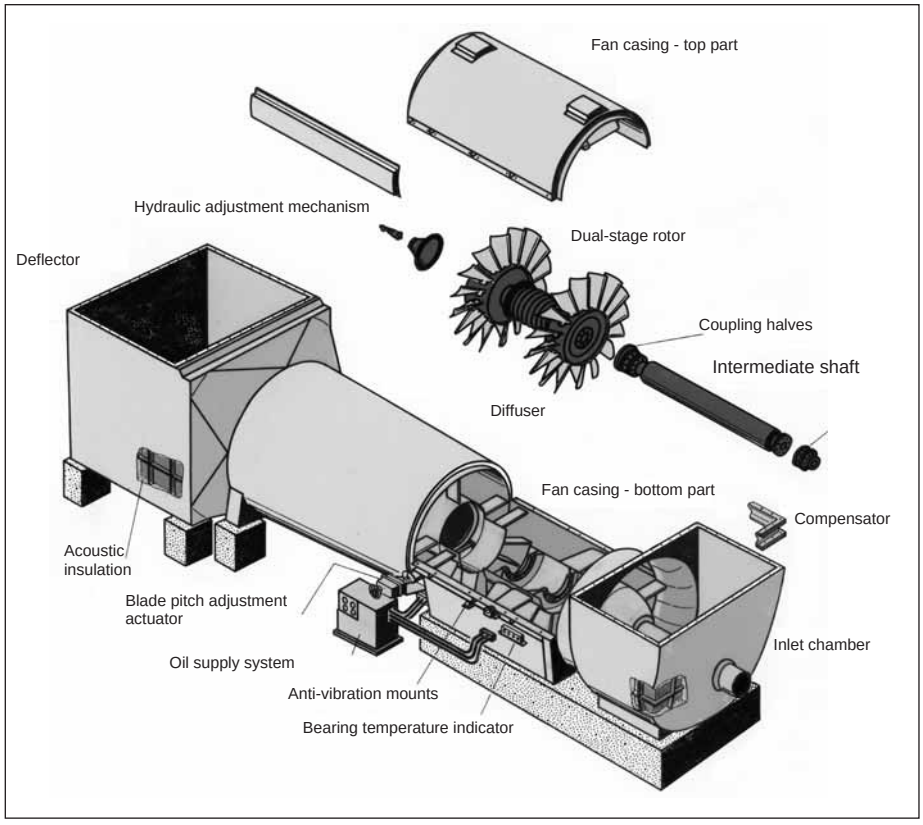

3.3.2.2 Axial-flow fan with adjustable inlet guide vanes and fixed impeller blades

The part-load performance of this fan type is usually inferior to that of axial-flow units with adjustable impeller blades.

However, given their rugged design, these fans are preferred for use under severe operating conditions, e.g. in high-temperature or high-dust environments.

Typical applications
Power stations, mining

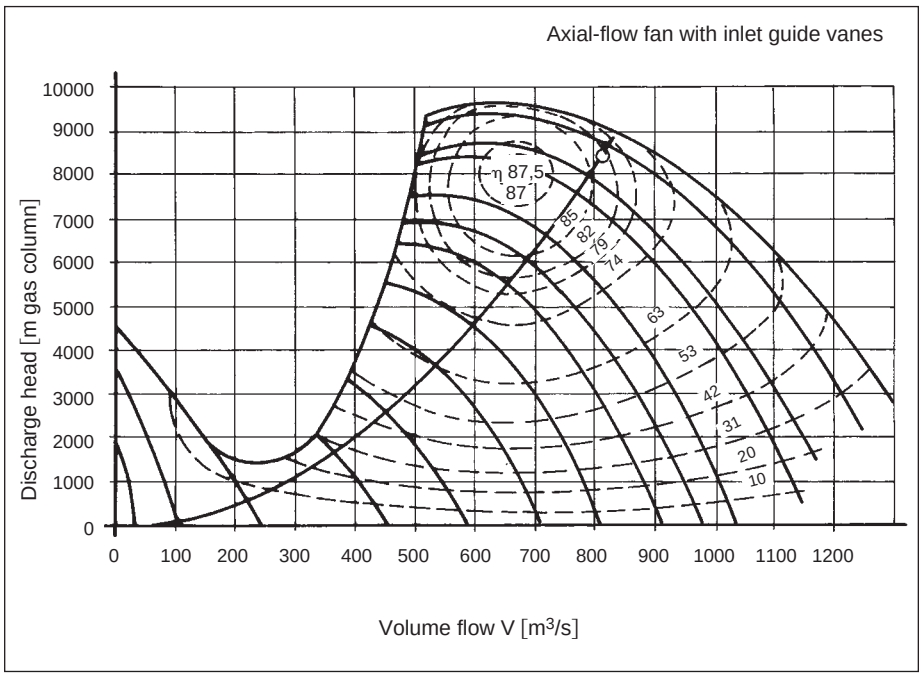

Example
Axial-flow fan with adjustable inlet guide vanes

Manufacturer:
TLT-Turbo GmbH

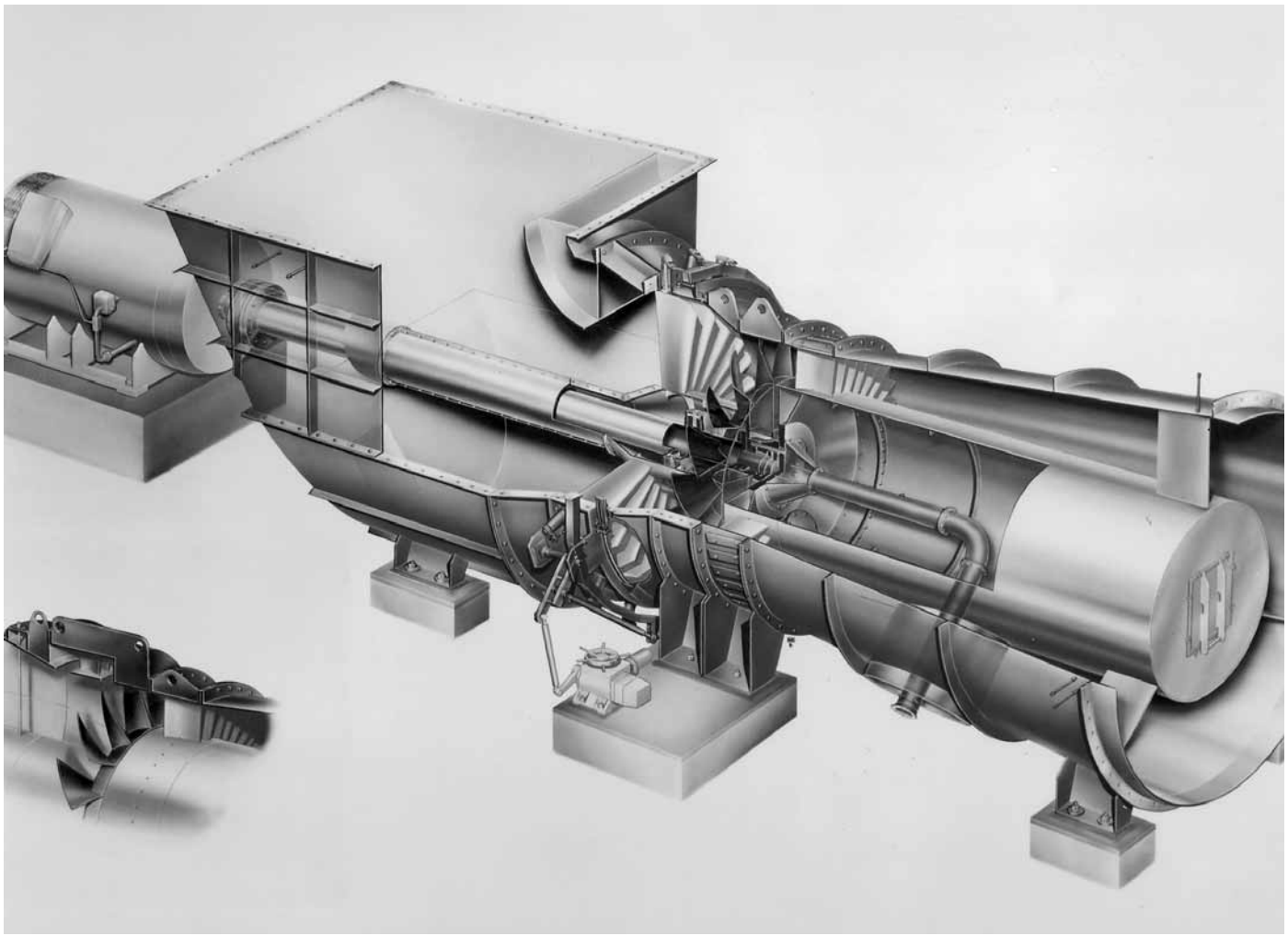

2

TLT-Turbo GmbH
Am Weinberg 68 · D-36251 Bad Hersfeld / Germany
Tel.: +49.6621.950-0 · Fax: +49.6621.950-100

CHARACTERISTIC CURVES OF AXIAL-FLOW FANS WITH BELT DRIVE TYPE AXN 12/56/1400/R SPEED CONTROLLED

090

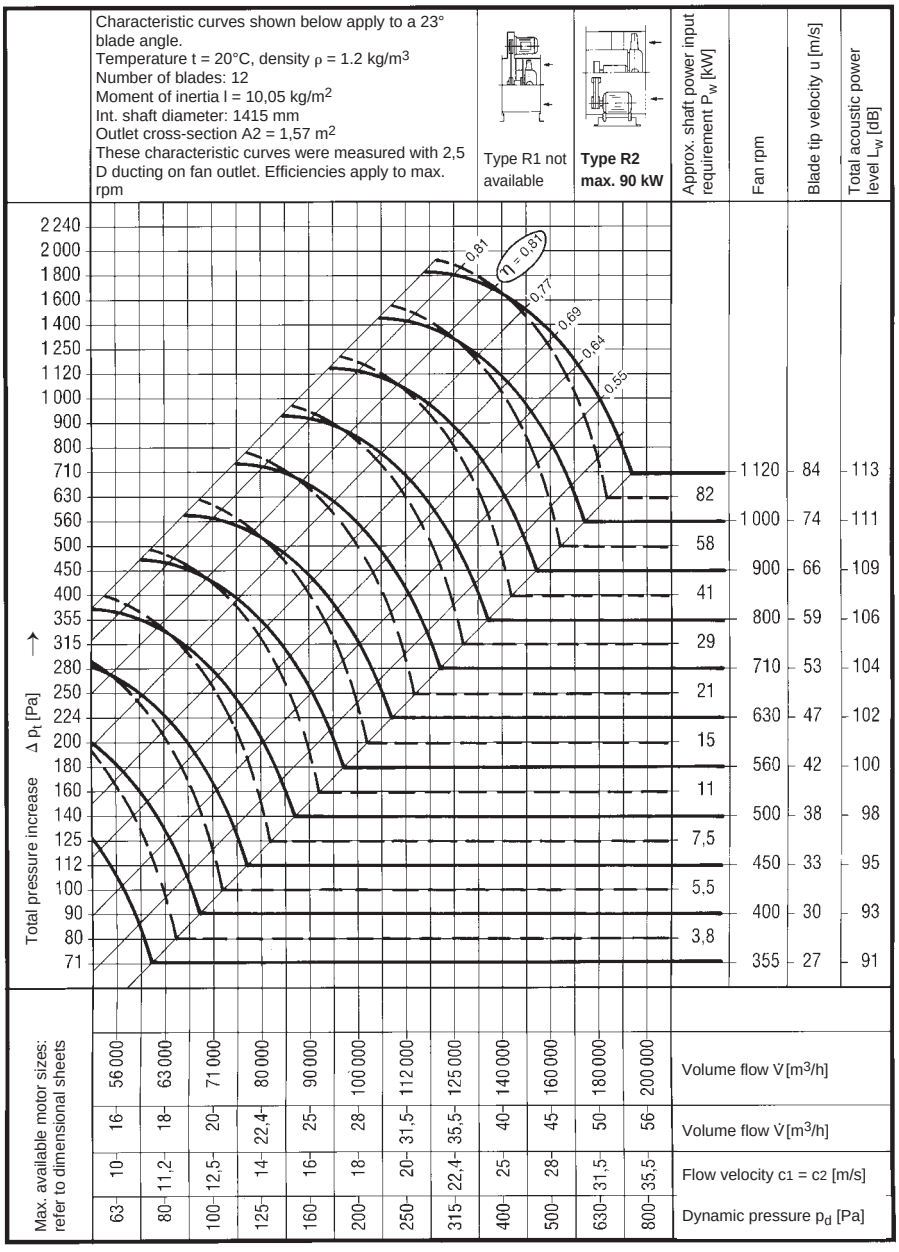

values rounded to standard figures.

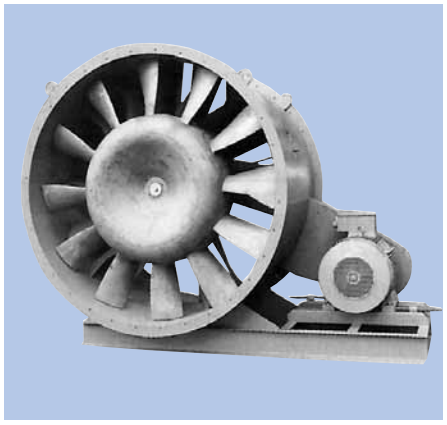

Type M-D

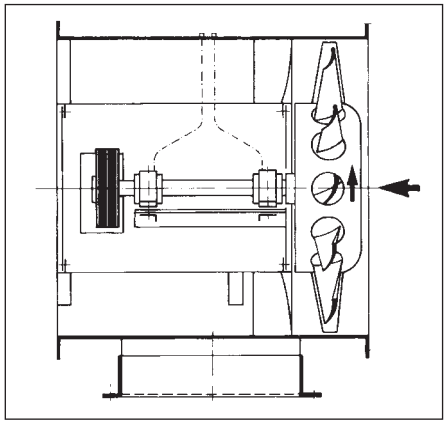

3.3.2.3 Speed-controlled axial-flow fans

Frequency converters have evolved into a powerful means of controlling the rotational speed of electric motors. This makes them ideal for use with fans.

Especially axial-flow fans with individual impeller blade adjustment on the stationary unit benefit from the use of advanced frequency converter technology for motor rpm control. Advantages are manifold:

- favourable placement of the axial-flow fan's operating point on the characteristic curve
- very good part-load performance giving a square-law characteristic curve for the system
- favourable acoustic properties in part-load operation
- simple mechanical structure ensures trouble-free operation

Example:
Axial-flow fan
Speed controlled (impeller blades adjustable on stationary fan)

Manufacturer
TLT-Turbo GmbH
Type AXN 12/56/1400/R2

3.3.3 Airflow direction inside the fan

Airflow in a fan commonly passes from the impeller and guide vanes over the motor and bearing assembly. All characteristic curves are based on this layout.

However, process reasons may require an arrangement of the motor on the fan inlet side. For these applications TLT-Turbo GmbH provides „inlet over motor“ (S) type units.

Nevertheless, the „D“ airflow direction should be preferred since „S“ type fans require a devaluation of the characteristic curve and achieve inferior efficiency levels.

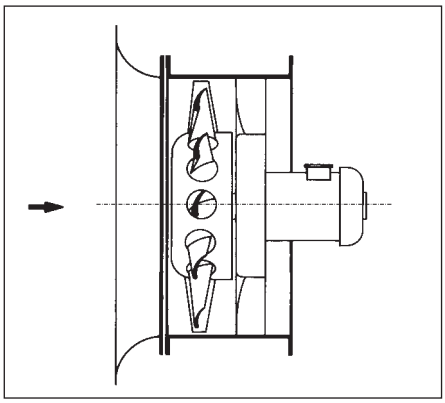

Standard design
Model AXN, type M-D
(outlet over motor)

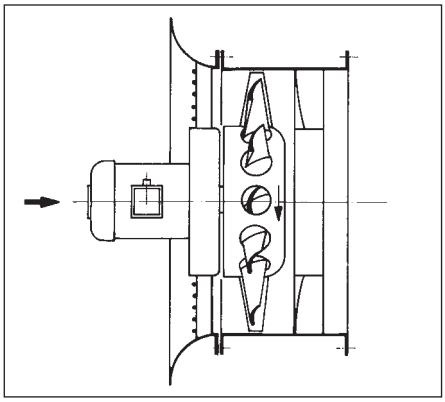

Special design
Model AXN, type M-S
(inlet over motor)

3.3.4 Hub ratio

The hub ratio denotes the ratio of the impeller hub diameter to the external impeller diameter. In the case of axial-flow fans, this ratio commonly varies between 0,25 and 0,63. By comparison, axial-flow compressors may have larger hub ratios.

The smaller the hub ratio, the lower the pressure of an axial-flow fan.

3.3.5 Drive type

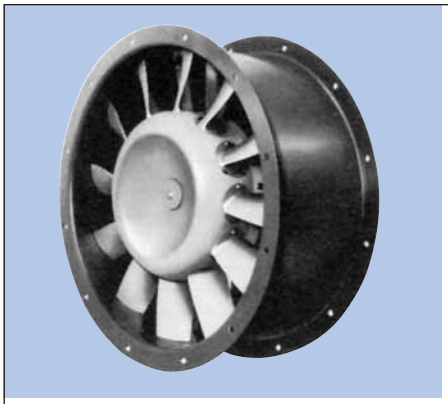

Axial-flow fan - standard direct-drive type

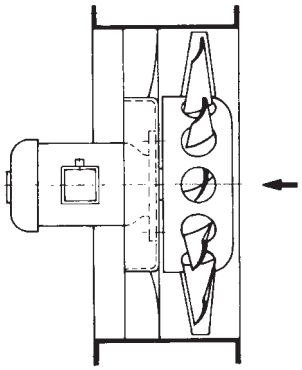

Type M - Impeller on motor output shaft

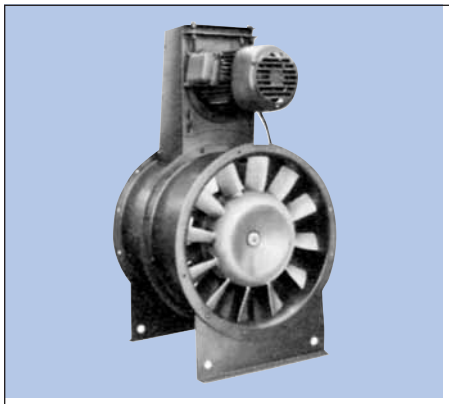

Axial-flow fan - V-belt driven type (motor mounted on fan casing) for light air-handling duty

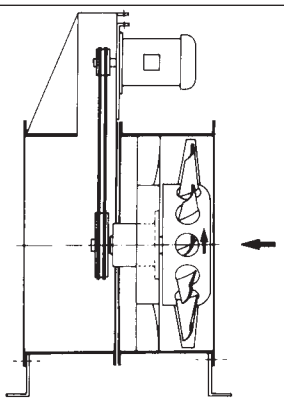

Type R1 - Impeller driven via V-belt

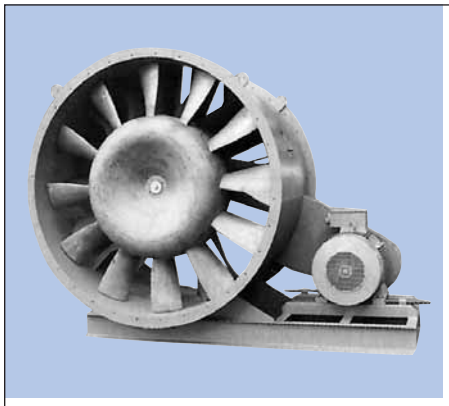

Axial-flow fan - V-belt driven type
(motor mounted sepertely on base-frame)

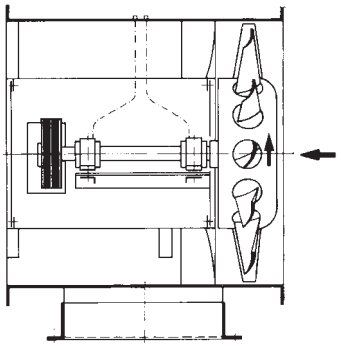

Type R2 - Impeller driven via V-belt

2

Large axial-flow fan (blower) - dual stage design with a common double bearing, driven directly via a coupling and intermediate shaft. The electric motor is arranged outside the gas flow.

Horizontal installation!

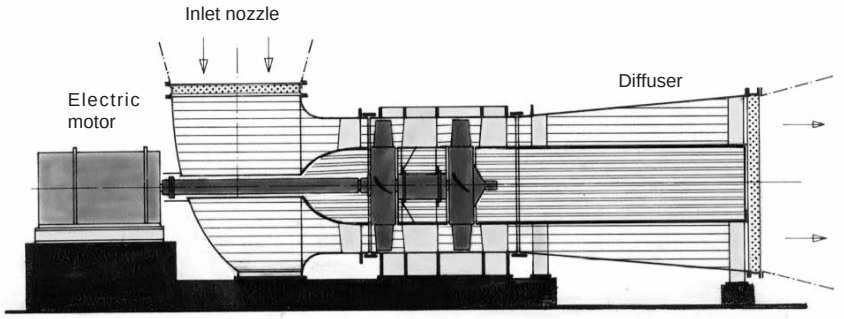

Large axial-flow fan (blower) - single stage with double bearing, driven directly via a coupling and intermediate shaft. The electric motor is mounted vertically outside the gas flow.

Vertical installation!
e.g. in a stack

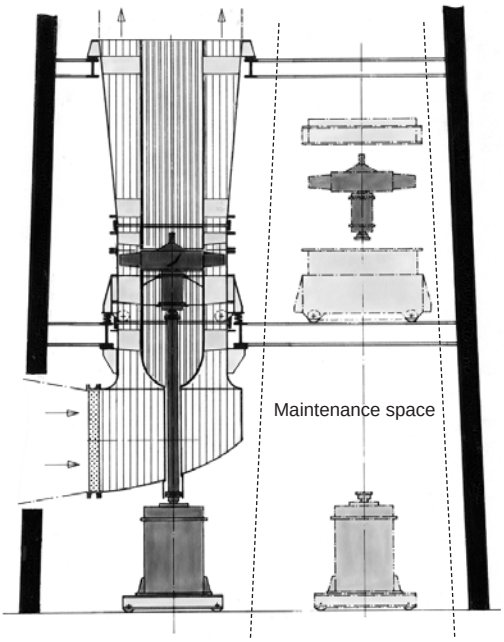

Large axial-flow fan (blower) - single stage, impeller mounted on the motor shaft, electric motor arranged in the gas flow.

Vertical installation!

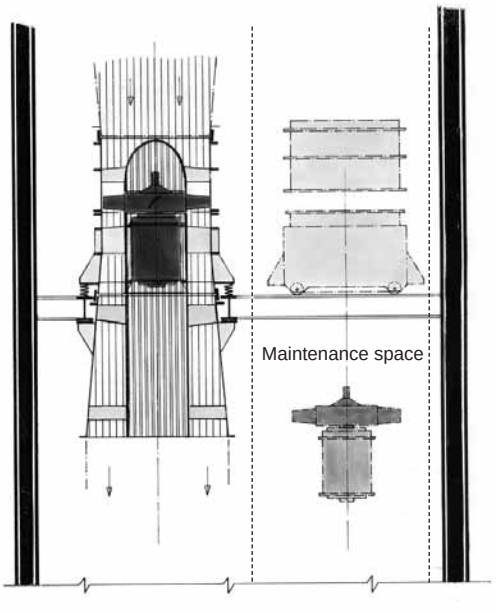

IV. Centrifugal fans

4.1 Structure and operation

A centrifugal fan has a spiral casing with bellmouth and an outlet connection, impeller, and discharge cut-off. The airflow enters the impeller through the bellmouth and is deflected centrifugally. A conversion of energy takes place within the impeller (blade channel), i.e. the mechanical energy imparted to the impeller via the shaft from the motor is transformed into pressure and velocity energy. Functions of the spiral casing are twofold. On the one hand, it gathers the air exiting the impeller and guides it to a common outlet. On the other, it converts part of the velocity energy (dynamic pressure) into pressure energy (static pressure) through the steady expansion of its cross-section

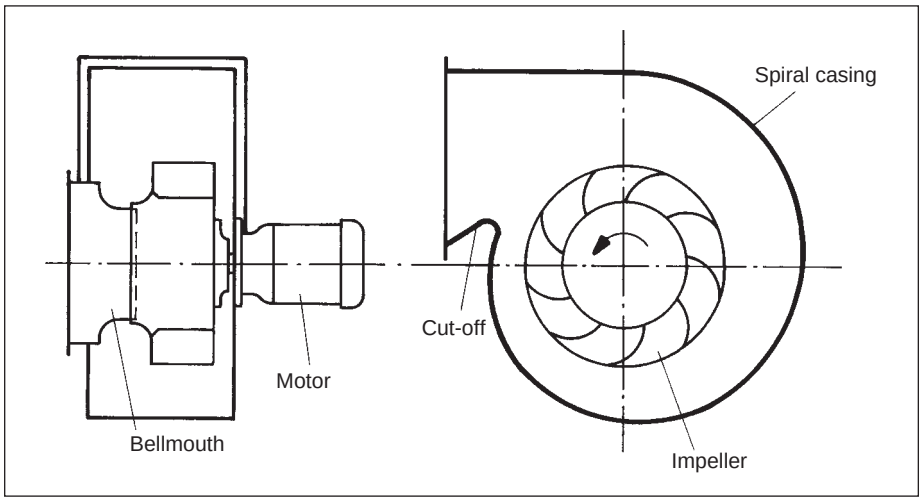

in the direction of flow (diffuser effect).

The narrowest point between casing wall and impeller is formed by the cut-off.

Centrifugal fans can deliver higher pressures than their axial-flow counterparts since their radial blade channels promote the build-up of static pressure through the different peripheral speeds at the impeller inlet and outlet.

4.2 Velocity triangles

Centrifugal fans are classified into four different impeller types according to the shape of their blades.

4.2.1 Backward curved blades

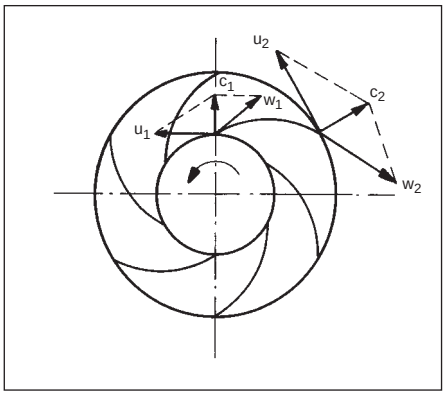

Centrifugal fans with backward curved blades are also referred to as „high-performance“ fans due to their outstanding efficiency. These impellers are particularly suitable for plug-in fans.

Blade outlet angle $w_2 \leqq 30°$

4.2.2 Backward inclined straight blades

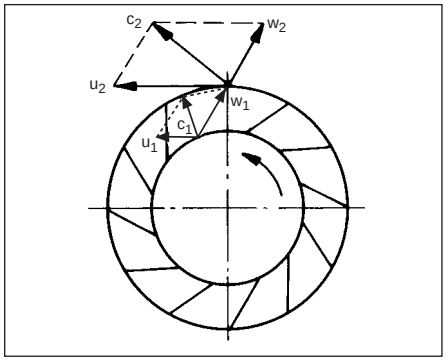

Such impellers are suitable for gases containing coarse dry particulate matter. Their efficiency is still very high, warranting classification in the high-performance category. Centrifugal fans with this blade configuration may be used to handle dirty media or to convey materials („high-performance dust fans“).

Blade outlet angle $w_2 = 40$ to 60°

4.2.3 Radially ending blades

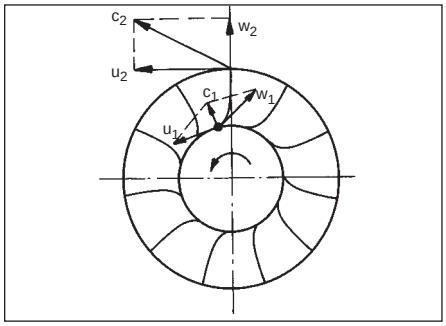

Such impellers are rarely employed in a ventilation and air conditioning context. Since the blade geometry reliably prevents accretions, centrifugal fans of this type are used to convey gases containing high loads of dust and suspended particulates (pneumatic conveyance applications). However, depending on dust type, backward curved blades may also serve this purpose.

Blade outlet angle $w_2 = 75$ to 90°

4.2.4 Forward curved blades

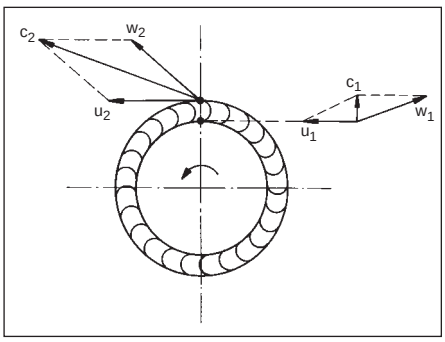

Centrifugal fans with many forward curved blades are also referred to as drum rotor fans. The proportion of velocity energy obtained with this design is very high. Due to the low efficiency achieved, use of such impellers is now limited to small centrifugal fans for air-handling applications.

2

4.3 Centrifugal fan configuration

Centrifugal fans are habitually classified according to the following criteria:

■ Blade shape

a) Centrifugal fans with backward curved blades („high-performance fans“)

b) Centrifugal fans with backward inclined straight blades („dust fans“)

c) Centrifugal fans with radially ending blades for dirty industrial gas flows

d) Centrifugal fans with forward curved blades for ventilation and air-conditioning (refer also to section 4.2).

■ Impeller characteristics

One important parameter is the ratio between the outside diameter and the inlet diameter (= nominal diameter) of the centrifugal impeller. This ratio characterizes the centrifugal fans in a given range. Typical diameter ratios vary between 1,1 and 7,1. In ventilation and air-handling applications, series 11 and 14 fans are common. The larger the diameter ratio, the higher the pressure delivered by the fan.

The centrifugal fan range of TLT-Turbo (formerly Babcock BSH) is structured into seven series delivering the following pressures:

4.3.1 Type designations

Type designation of a centrifugal fan should indicate not only its pressure output capability but also its specific application properties. Apart from the fan series (reflecting the diameter ratio), this identification need is fulfilled by the blade outlet angle w_2. As a result, each fan series comprises various impeller blade configurations defined by the blade outlet angle w_2. The fan can thus be adapted individually to specific application requirements.

■ Steep or flat characteristic curve

■ Control range requirements

■ High-dust service

■ Wear or accretions

■ Direct motor drive for individual operating point selection

Series	Pressure range at ϱ = 1,20 kg/m³ (guide values)
11	100 – 2800 Pa
14	1800 – 4500 Pa
18	2800 – 7100 Pa
22	5500 – 11200 Pa
28	8100 – 16000 Pa
35	12500 – 20000 Pa
45	16000 – 25000 Pa

Diameter ratio 1,4 = Series 14

Type designation of TLT-Turbo GmbH's standard range of industrial centrifugal fans

14 / 45

Series (Diameter ratio x10) — Blade outlet angle w_2

TLT-Turbo GmbH's standard range is divided into seven centrifugal fan series, each comprising various blade shapes and blade outlet angles.

In addition, each type can be made of different materials to resist chemical attack and elevated temperatures.

The illustration across shows all types in our standard range, together with their key properties. This product diversity allows us to address each application requirement in an ideal manner.

Fan types preferred in ventilation and air handling applications

☐ = Steep characteristic curve, maximum efficiencies for industrial environments, particularly favourable control response

▒ = For dust service, dust repellent, for coarse and dry suspended particulates

■ = For extremly high dust loads, featuring self-cleaning impeller blades except for deposits due to chemical reactions or electrostatic charge

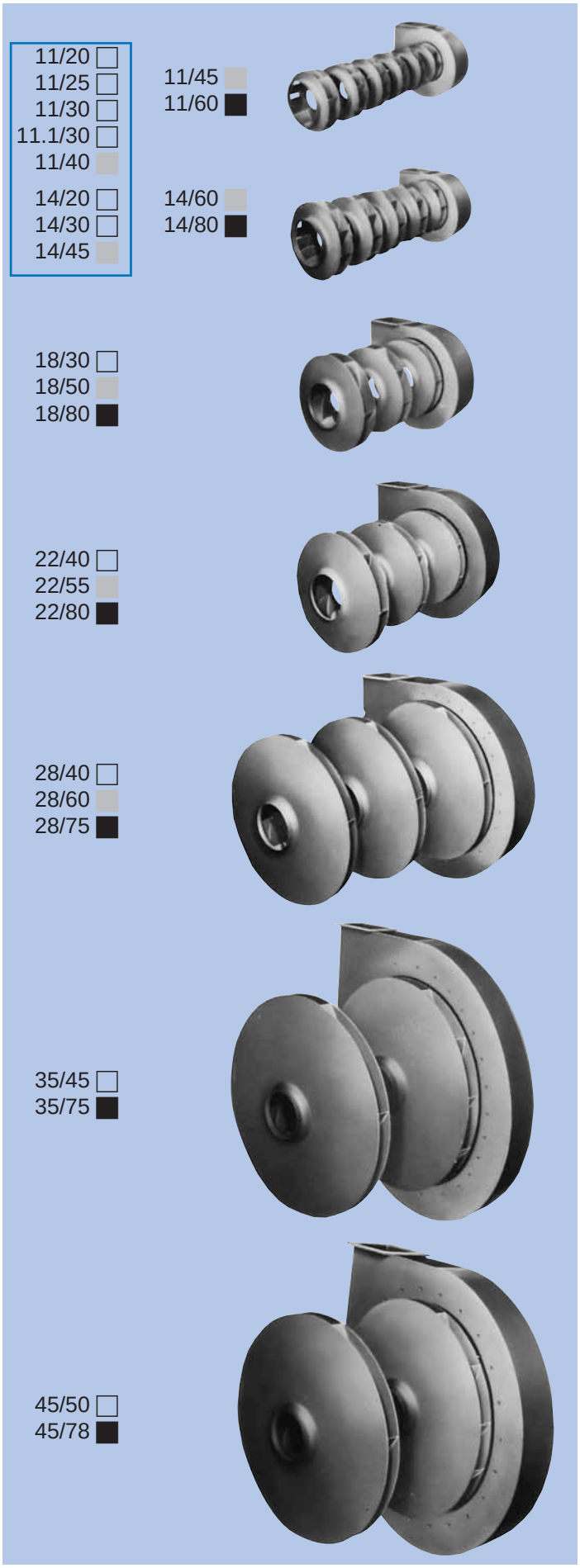

4.3.2 Inlet type

Centrifugal fans may be of the single-inlet or double-inlet type. A double-inlet centrifugal fan delivers approximately twice the volume per unit time when compared to a single-inlet unit of the same nominal size and total pressure increase. The configuration corresponds to a parallel arrangement of two fans (refer to section 5.4).

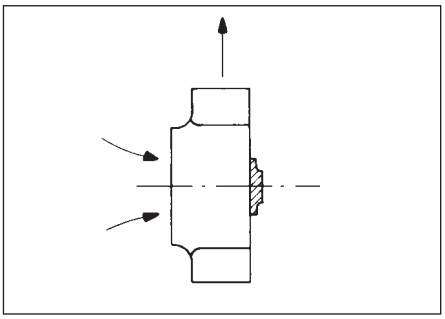

Single-inlet centrifugal fan impeller

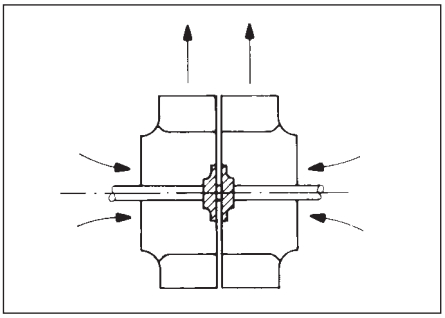

Double-inlet centrifugal fan impeller

2

4.4 Types and drive arrangements

Type	Connection	Drive
R	U	M
Single-inlet	Direct duct connection	Impeller on motor shaft
Z	E	K
Double-inlet	With bellmouth	via coupling
	S	R
	With inlet box	via belt

* Design types according to VDMA 24164

4.4.1 Casing orientation and direction of rotation

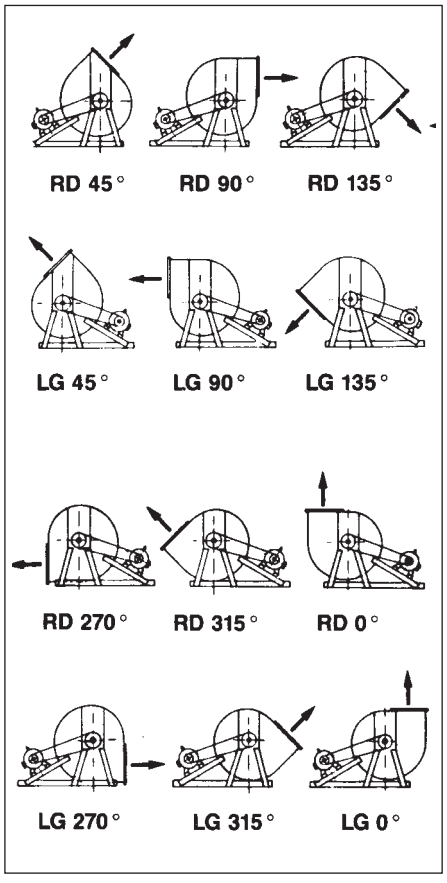

Housing orientation and direction of rotation are always specified as viewed from the drive side.

For designations used, refer to the above table.

Type examples (shown with options)

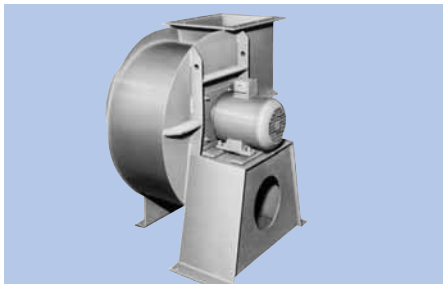

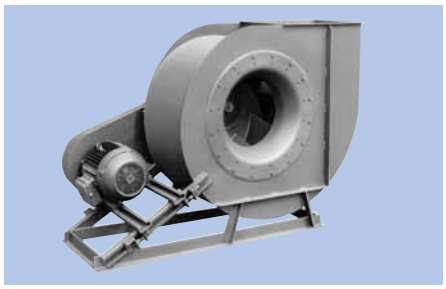

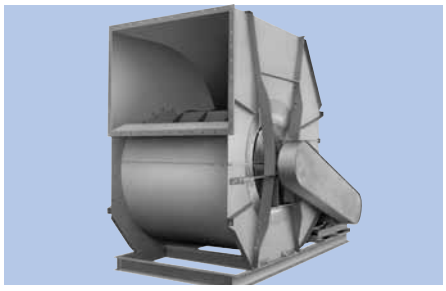

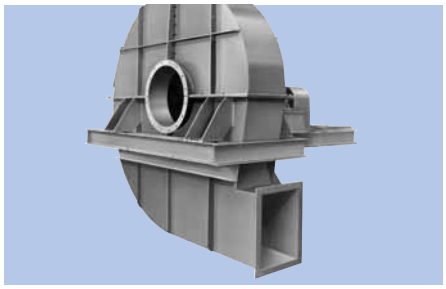

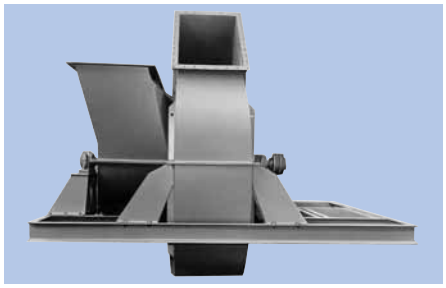

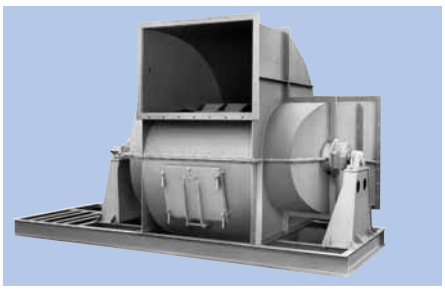

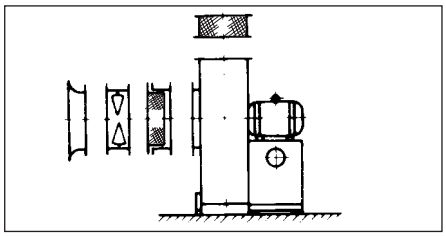

Type RUM: single-inlet, impeller on motor shaft end

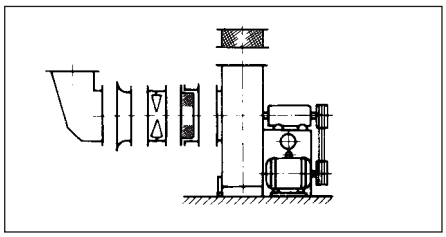

Type RUR: single-inlet, belt-driven impeller

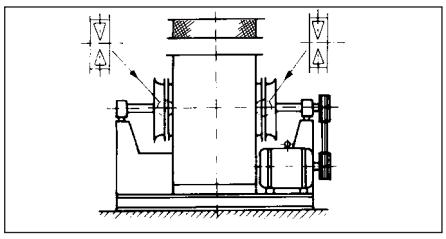

Type ZER: double-inlet, belt-driven impeller

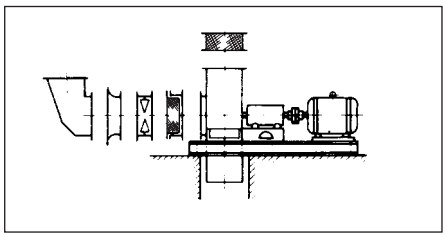

Type RUK IV: single-inlet, direct driven via an elastic coupling

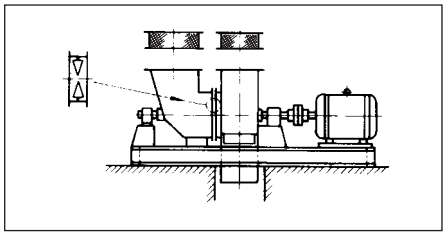

Type RUK V: single-inlet, direct driven via an elastic coupling

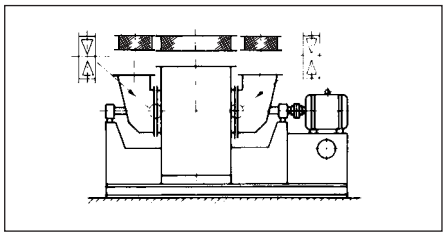

Type ZSKI: double-inlet, with inlet box, direct motor driven

4.5 Important custom and special designs

4.5.1 Centrifugal plug-in fans

Configured preferably as a single-inlet unit, this fan type is preferred where large volumes of air must be conveyed against total pressures ≤ 2000 Pa.

Typical applications therefore include

Dryers (all types)
Spray-painting lines
Cooling installations
Cleanroom systems
Central air-handling units

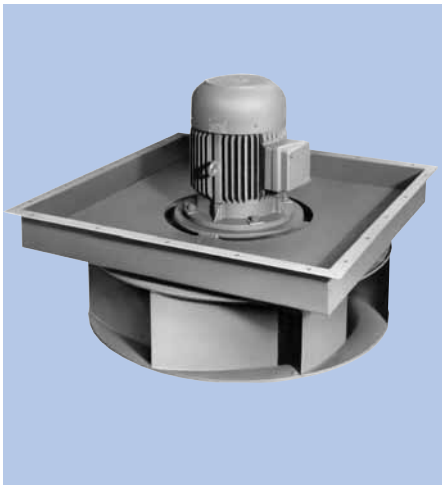

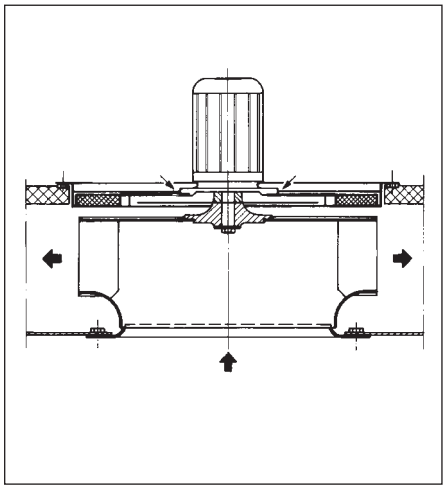

Centrifugal plug-in fan for installation in a dryer

Driven by a standard motor
Max. temperature: 250°C

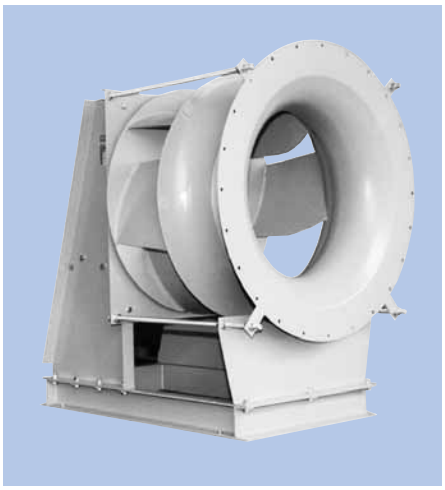

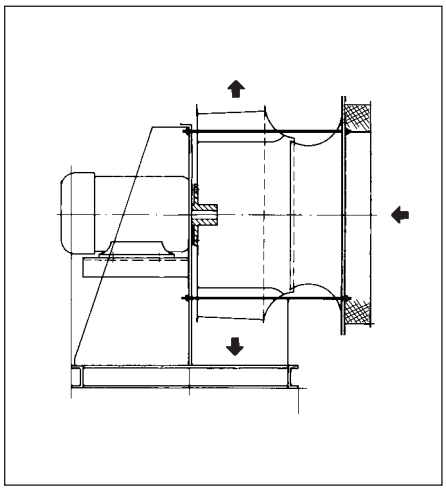

Centrifugal plug-in fan for horizontal installation in central AHU plants

Driven by a standard motor mounted in the airflow

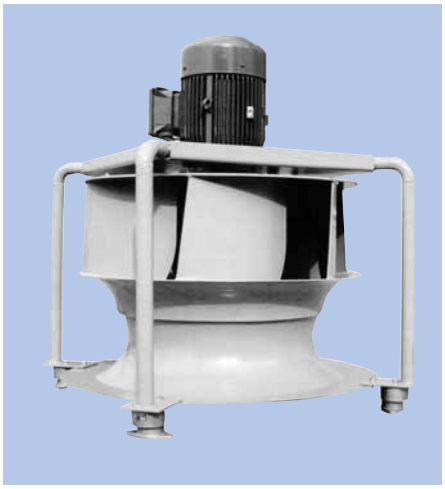

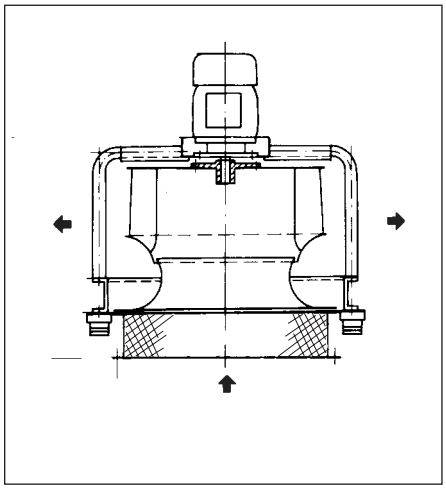

Centrifugal plug-in fan for vertical installation

Driven by a standard motor mounted in the airflow

4.5.2 Roof-mounting centrifugal fans

2 Centrifugal fans for rooftop installation are special free-inlet units suitable for use as central air exhaust fans due to their pressure capacity.

These fans are available in diverse types:

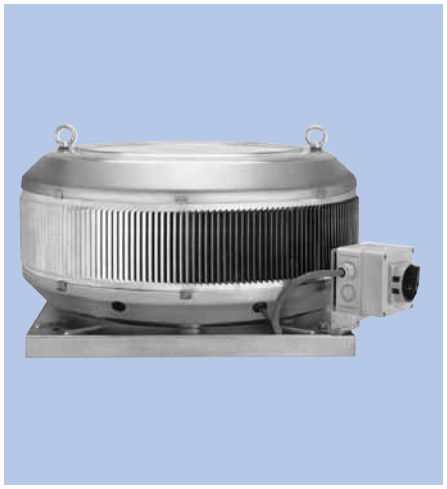

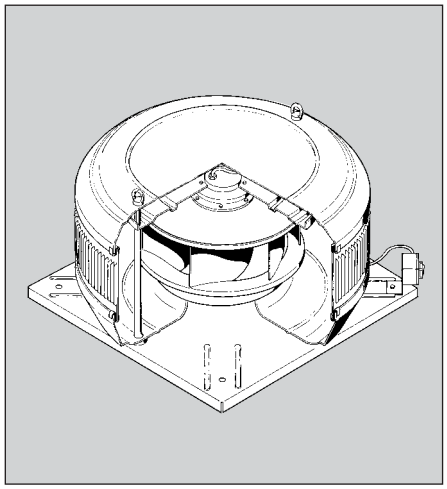

centrifugal roof fan DRH type

with horizontal air outlet, driven by a special motor (external rotor)



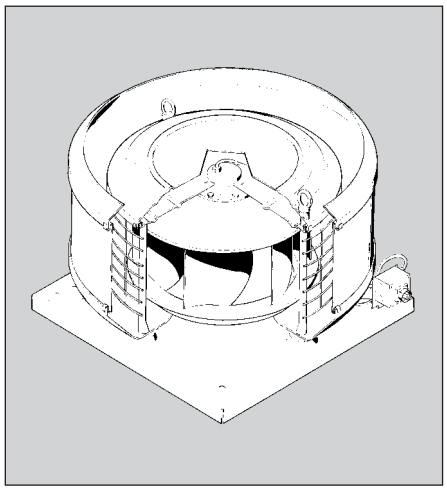

centrifugal roof fan DRV type

with vertical air outlet, driven by a special motor (external rotor)



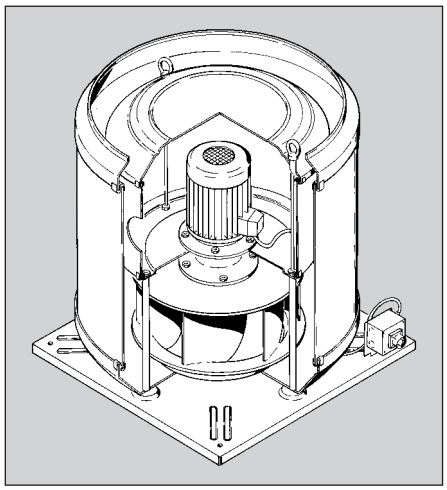

centrifugal roof fan DRVF type

with vertical air outlet, driven by a standard motor



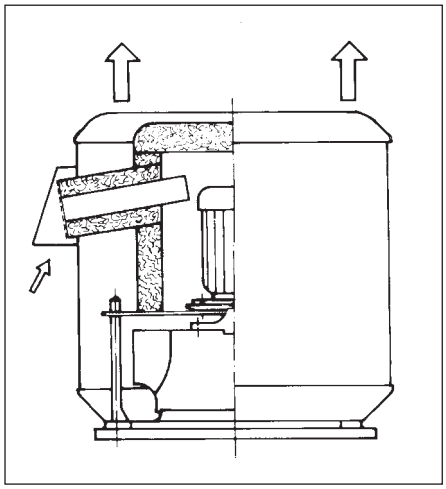

centrifugal roof fan
BVD type

vertical air outlet, designed as a smoke exhaust fan to extract fumes and smoke, rated for 400°C/620°C - 120 minutes



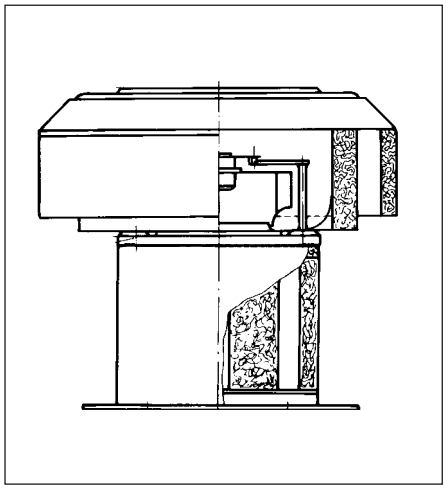

centrifugal roof fan
DR-SDH type

with horizontal air outlet, noise-insulated on inlet and outlet side



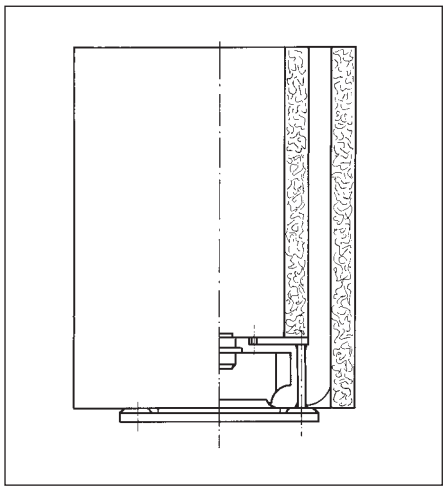

centrifugal roof fan
DR-SDV type

with noise-insulated vertical outlet

4.6 Operation under dust and wear loads

2 For exhaust air fans and some industrial process fans, dust and wear are factors which require special consideration at the design and dimensioning stage. The dust load encountered and its consistency and moisture are important criteria.

Every dust particle that does not adhere to a surface is a potential cause of wear. While a lack of information about the wear process will primarily affect the question of spare part availability for the selected fan types, uncertainties concerning dust adhesion characteristics will often determine whether or not a given fan is employed at all.

The tendency of suspended solids to adhere on the blade inlet sides of centrifugal fan impellers with backward curved blades and on the blade outlet surfaces of forward curved blades can only be avoided with any degree of certainty if the applicable angles of slip are accurately known for the given dust particle size distribution [1].

4.6.1 Conveying dust and fibrous media

Backward curved blade

Dust sticks to surface.
R > T

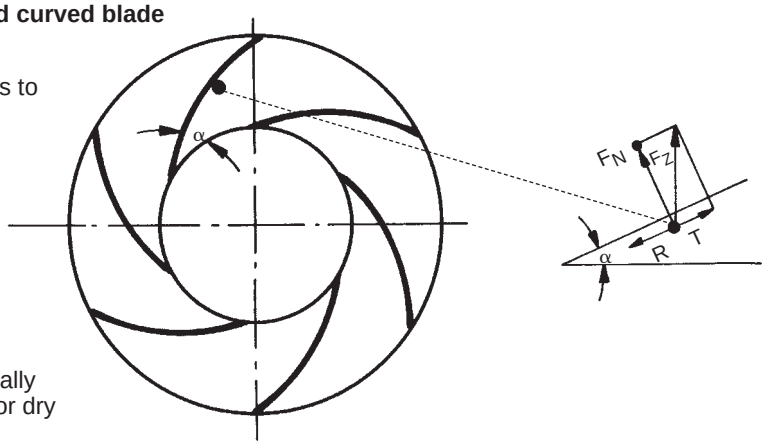

Conditionally suitable for dry dust

Radially ending blades

Dust is flung away from blade surface.
R < T

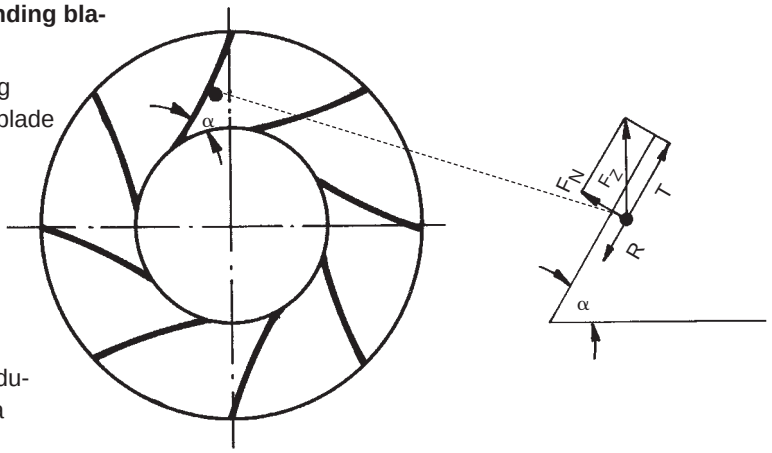

For dirty industrial media

Impeller without cover plate

(Stationary cover plate attached to housing)

Fibrous media - glide over blade surface
R < T

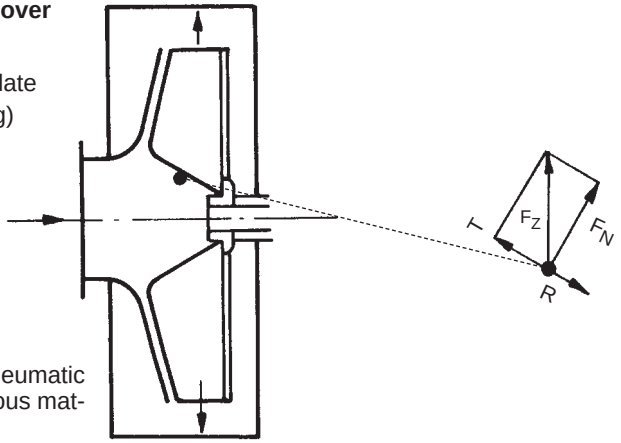

Specifically for pneumatic conveyance of fibrous matter!

Explanation of terms

F_N = Force in normal direction

F_Z = Centrifugal force

T = Force in tangential direction

R = Friction force = $F_N \cdot \mu$

μ = Friction coefficient

For further information on how to select suitable centrifugal fans refer to chapters 4.2 and 4.3

Note:
High dust loads in the conveyed medium require an additional power input which must be taken into account!

Important:

With gas flows containing high dust loads, the resulting extra power requirement and pressure loss must be taken into account.

4.6.2 Fan wear

Fans conveying media which contain suspended particles are subject to wear. This effect can be reduced, albeit not avoided altogether, through suitable design strategies.

Abrasive wear changes the surfaces exposed to the gas flow. Symptoms include denting, corrugation effects, scratches and score marks on the exposed metal. A micro-level „machining“ process is taking place, resulting in a loss of material.

Abrasion is caused by particulate matter in the gas flow which slides along the relevant surfaces or collides with them from various angles.

The general principle whereby a centrifugal fan blade extending at a tangent to the dust flow at every point of the blade's radial extension will always be subject to the least amount of wear (i.e., sliding wear) can be considered proven. Where a problem cannot be addressed by selecting appropriately adapted blading, the engineer is left with the option of maximizing economic efficiency via the selection of suitable materials and material thicknesses.

Abrasive processes and their terminology are addressed in DIN 50320.

The most important wear parameters can be summarized thus:

A. Impeller
– Hardness and material thickness of the impeller body
– Blade tip velocity
– Blade shape

B. Dust load
– Hardness of the impinging particles
– Grain size and geometric particle shape
– Particle density

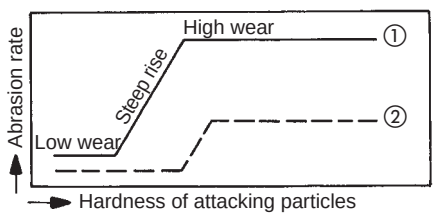

① Soft component
② Hard component

Wear processes

The influence of particle hardness on the rate of abrasion from a soft surface (e.g. non-armoured blade) or a hard surface (e.g. hardfaced blade) is illustrated by the following diagram:

1 If the attacking particles are softer than the exposed component, little abrasion occurs. The process remains in the **low wear** range.

2 If the attacking particles are harder than the exposed component, significant abrasion will take place. The process lies in the **high wear** range.

3 If the hardness of the attacking particles and of the exposed component are approximately equal, minor shifts will suffice to produce a substantial change in wear behaviour. The process lies in the range of the **steep rise.**

Important

To minimize wear, the hardness of the exposed component must be selected such that it exceeds that of the abrasive particles.

Measures	Description
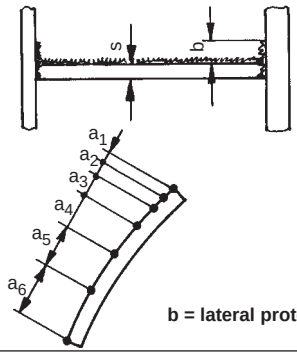 b = lateral protection	1. Blade material s Ste 70 2. Blade thickness „s“ increased by 2-3 mm 3. Weld beads extending in a direction transverse to the direction of flow, placed with the aid of hardfacing electrodes. Bead distance „a“ decrease toward the outside diameter.
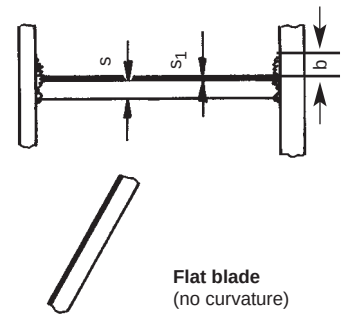 **Flat blade** (no curvature)	1. Blade base material s 2. Surface hardfaced to s_1 = approx. 0,8 – 1,0 mm by tungsten carbide flame spraying
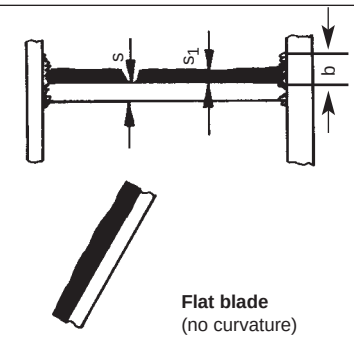 **Flat blade** (no curvature)	1. Blade base material s 2. Surface hardfaced to s_1 = approx. 0,5 mm by continuous weld cladding with a material containing chromium carbide

Note:
Anti-wear measures on impellers will give rise to increased weights and imbalance forces. Consequences such as
– need for reinforced driveshafts and bearings
– need for stronger fan supporting structures
– efficiency deterioration
need to be taken into account!

V. Fans as system components

2

5.1 Characteristic system/fan curves, proportionality law

Theory of establishing a system's characteristic curve was examined earlier in section 2.5. Below we shall take a look at the underlying laws by examining linear and log-log graphs for the example of a RA 11.1 centrifugal fan, nominal size 800, made by TLT-Turbo GmbH.

If two operating points are compared, pressure ratio is equal to volume ratio squared, i.e.

$$\frac{\Delta p_{t1}}{\Delta p_{t2}} = \left(\frac{\dot{V}_1}{\dot{V}_2}\right)^2 \text{ or } \Delta p_{t2} = \Delta p_{t1} \cdot \left(\frac{\dot{V}_2}{\dot{V}_1}\right)^2$$

In our example, the operating point B_1 lies at $\dot{V}_1 = 10$ m³/s and $\Delta p_{t1} = 1750$ Pa. Which value is obtained with Δp_{t2} at $\dot{V}_2 = 5$ m³/s

$$\Delta p_{t2} = 1750 \text{ Pa} \cdot \left(\frac{5}{10}\right)^2 = 438 \text{ Pa}.$$

System characteristic curves with different operating points

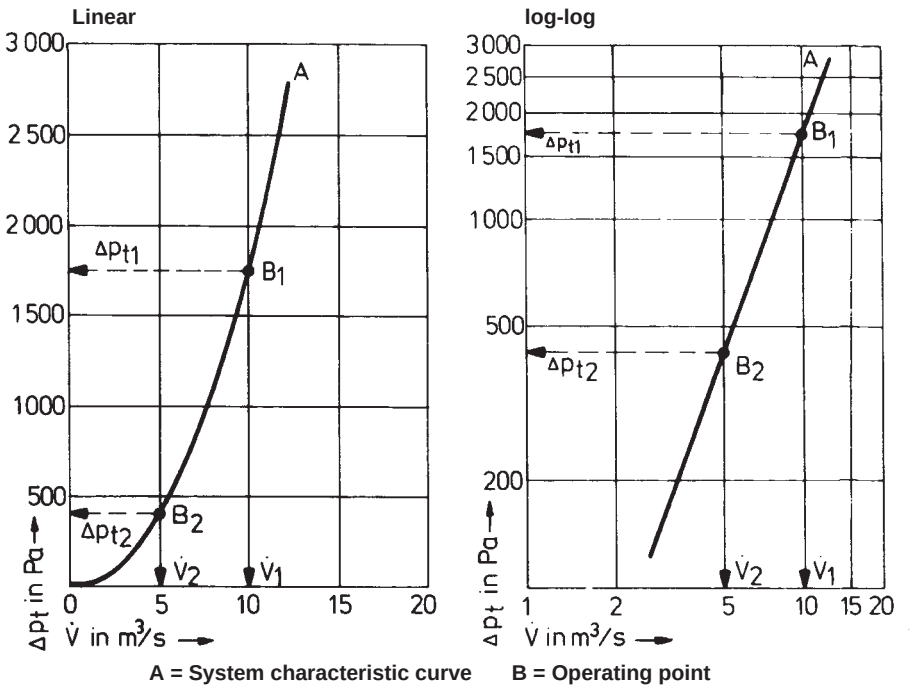

A = System characteristic curve B = Operating point

The total pressure increase produced by a fan consists of a static and dynamic component. The dynamic pressure increase is expressed with reference to the fan inlet connection. It is calculated according to the known formula $p_d = \frac{\varrho}{2} c^2$

where c is the mean flow velocity in the fan inlet connection, i.e.

$c = \frac{\dot{V}}{A}$, where A is the cross-sectional area of the inlet connection.

In our example, we obtain the following for $\dot{V} = 10$ m³/s and the selected NG 800 centrifugal fan:

$$A = \frac{d^2 \pi}{4} = \frac{0{,}8^2 \text{ m}^2 \pi}{4} = 0{,}502 \text{ m}^2$$

$$c = \frac{\dot{V}}{A} = \frac{10 \text{ m}^3}{0{,}502 \text{ m}^2 \cdot \text{s}} = 19{,}9 \text{ m/s}$$

$$p_d = \frac{\varrho}{2} \cdot c^2 = \frac{1{,}2}{2} \cdot 19{,}9^2 \frac{\text{kg m}^2}{\text{m}^3 \text{ s}^2} = 238 \text{ Pa}$$

Dynamic pressure in the fan inlet connection

(C = line of dynamic pressure)

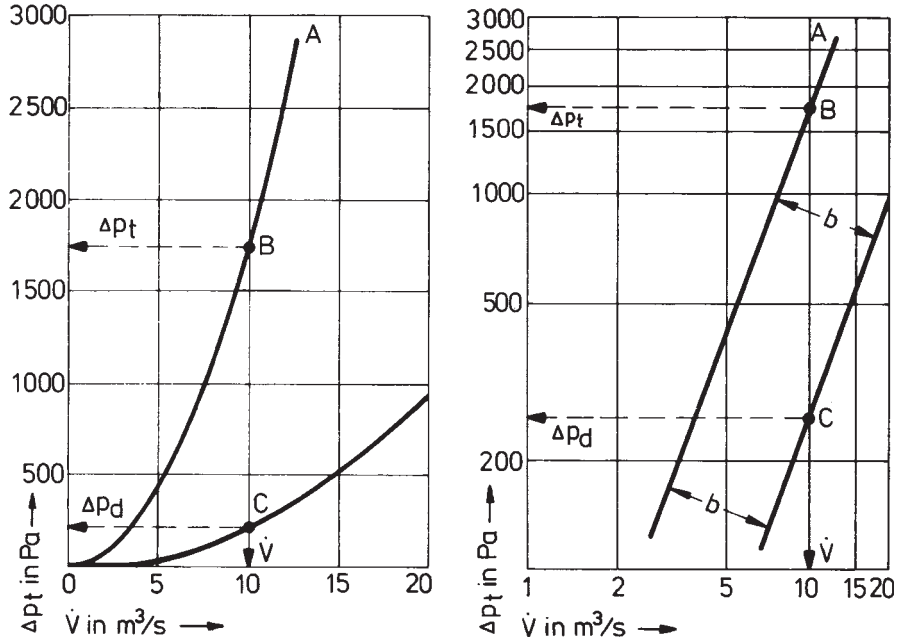

The performance behaviour of a fan is described by its characteristic curve. This graph is determined by rig-testing under specific conditions defined in DIN 24163. To establish the curve, various operating points are simulated by throttling the volume flow, and the measured value pairs for Δp_t - V are plotted in a diagram from which the characteristic curve is then drawn. During rig testing, shaft power input requirement is measured at the same time to determine the fan's efficiency. The power input requirement is obtained from the input torque M_W and the angular velocity ω. The efficiency h is the quotient of input and output power. The output P is referred to as the useful or effective power; the power input is the shaft power requirement Pw.

$$\left.\begin{array}{l} P = \Delta p_t \cdot \dot{V} \\ P_W = M_W \cdot \omega \end{array}\right\} \eta = \frac{P}{P_W} = \frac{\Delta p_t \cdot \dot{V}}{M_W \cdot \omega}$$

Hence, $\boxed{P_w = \frac{P}{\eta} = \frac{\Delta p_t \cdot \dot{V}}{\eta}}$

if η is known.

P = power in W (or kW if p_1 is expressed in kPa)

Δp_t = total pressure increase in Pa (or kPa, respectively)

$\dot{V}$ = volume flow in m^3/h

M_w = input torque in Nm

ω = angular velocity in 1/s

$$\boxed{\omega = \frac{\pi \cdot n}{30} \cdot s^{-1}} \quad \text{for n in rpm}$$

Characteristic curve of fan and system

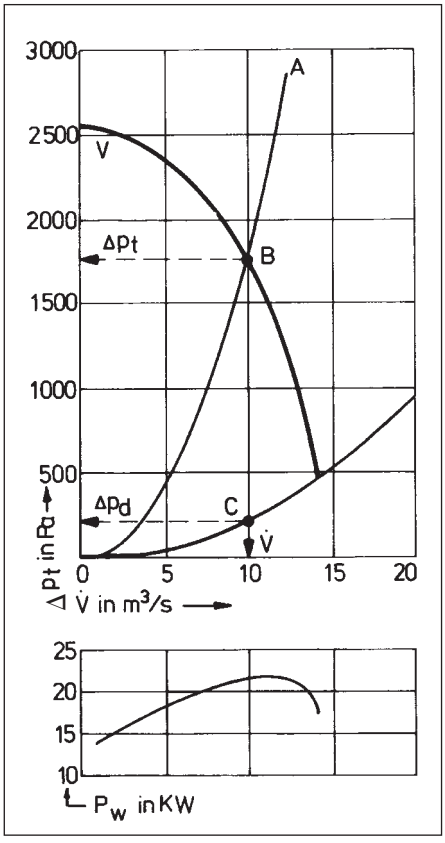

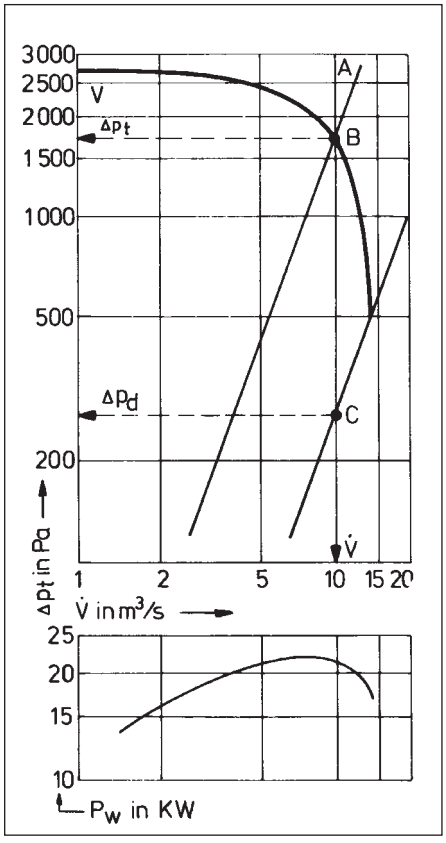

The fan's operating point within the overall system always lies at the intersection of the characteristic curves of the system and the fan.

The point of intersection between the fan's characteristic curve and the dynamic pressure line marks the maximum capacity, i.e., the air volume which this fan would deliver against „zero" system resistance.

Proportionaltiy laws for fan series of geometrical and kinematicalls imilarity
Index 2 = Reference Size

2

Formular Symbols:
$\dot{V}$ = Volume flow [m³/h or m³/s resp.]
n = Rotational Speed [rpm]
Δpt = Total pressure differences [Pa]
P_w = Power requirement at shaft [kW]
T = Temperature [°C]
ϱ = Density [kg/m³]
d = Outer dia. of impeller Ø [m]

Ⓐ n ≠ const., ϱ = const.

$$\frac{\dot{V}_1}{\dot{V}_2} = \frac{n_1}{n_2}$$

$$\frac{\Delta p_{t1}}{\Delta p_{t2}} = \left(\frac{n_1}{n_2}\right)^2 = \left(\frac{\dot{V}_1}{\dot{V}_2}\right)^2$$

$$\frac{P_{w1}}{P_{w2}} = \left(\frac{n_1}{n_2}\right)^3 = \left(\frac{\dot{V}_1}{\dot{V}_2}\right)^3$$

Ⓑ n = const., ϱ ≠ const. bzw. T ≠ const.

$$V_1 = V_2 = \text{const.}$$

$$\frac{\Delta p_{t1}}{\Delta p_{t2}} = \frac{\varrho_1}{\varrho_2} = \frac{T_1}{T_2}$$

$$\frac{P_{w1}}{P_{w2}} = \frac{\varrho_1}{\varrho_2} = \frac{T_1}{T_2}$$

Ⓒ n = const., d_2 ≠ const.

$$\frac{\dot{V}_1}{\dot{V}_2} = \left(\frac{d_1}{d_2}\right)^3$$

$$\frac{\Delta p_{t1}}{\Delta p_{t2}} = \left(\frac{d_1}{d_2}\right)^2$$

$$\frac{P_{w1}}{P_{w2}} = \left(\frac{d_1}{d_2}\right)^5$$

Ⓓ n ≠ const., d ≠ const., ϱ ≠ const.

$$\frac{\dot{V}_1}{\dot{V}_2} = \frac{n_1}{n_2}\left(\frac{d_1}{d_2}\right)^3$$

$$\frac{\Delta p_{t1}}{\Delta p_{t2}} = \left(\frac{n_1}{n_2}\right)^2 \frac{\varrho_1}{\varrho_2}\left(\frac{d_1}{d_2}\right)^2$$

$$\frac{P_{w1}}{P_{w1}} = \left(\frac{n_1}{n_2}\right)^3 \frac{\varrho_1}{\varrho_2}\left(\frac{d_1}{d_2}\right)^5$$

Proportionality laws

1) Rotational speed change (from n_1 to n_2, in our case from 1400 to 1800 rpm)

In our example, the fan speed was changed from 1400 to 1600 rpm

Given the known square law of the characteristic curve, this results in the following changes:

a) Volume flow V changes in proportion to the speed (rpm), i.e.

$$\frac{\dot{V}_1}{\dot{V}_2} = \frac{n_1}{n_2} \quad \text{or} \quad \dot{V}_2 = \dot{V}_1 \cdot \frac{n_2}{n_1}$$

b) Total pressure increase Δp_t changes with the square of the rotational speed, i.e.

$$\frac{\Delta p_{t1}}{\Delta p_{t2}} = \left(\frac{n_1}{n_2}\right)^2 \text{or } \Delta p_{t2} = \Delta p_{t1} \cdot \left(\frac{n_2}{n_1}\right)^2$$

c) Shaft power input requirement P_w changes with the third power of the rotational speed, i.e.

$$\frac{P_{w1}}{P_{w2}} = \left(\frac{n_1}{n_2}\right)^3 \text{or } P_{w2} = P_{w1} \cdot \left(\frac{n_2}{n_1}\right)^3$$

Change in rpm (from n_1 to n_2, i.e., from 1400 to 1600 rpm in this example):

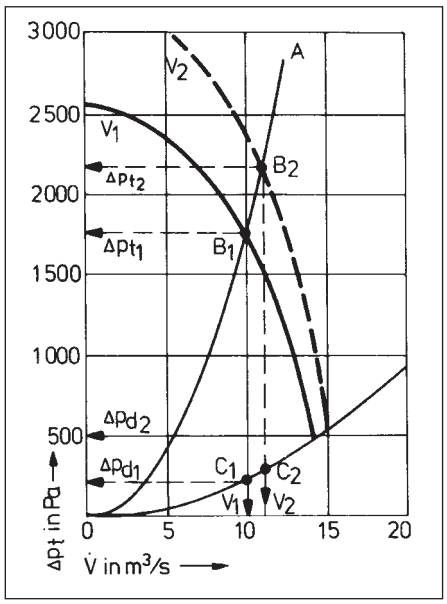

linear

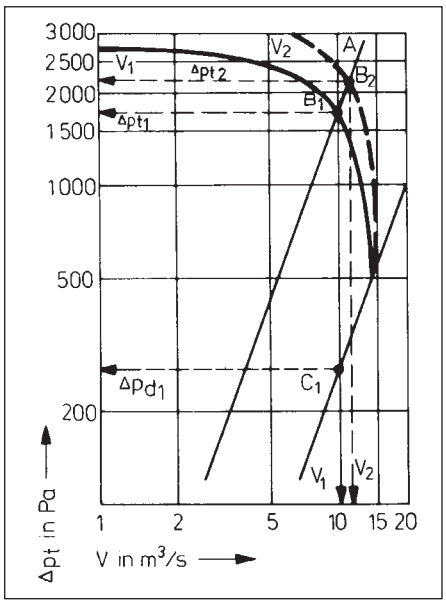

log-log

2) Density and temperature changes

In ventilation and air-conditioning engineering, characteristic fan curves are shown for a temperature of 20°C = 293 K. Density ρ is 1,20 kg/m³ at this temperature. Where different temperatures apply (e.g. an outdoor fan to be rated for -15°C = 258 K) the fan's characteristic curves for that temperature can be obtained by conversion.

a) Volume flow always remains constant, i.e. a fan delivers the same volume per unit time regardless of whether the air is „light" (e.g., +40°C) or „heavy" (e.g., -15°C). This is because of the density (unlike the mass flow, which does change with temperature) not being a factor in the volumetric flow rate.

b) Values depending on density ρ and hence, on the temperature, will change with it (refer to section 2.1).

Hence:

Total pressure increase Δp_t, dynamic pressure Δp_d, system resistance Δp_t and power input requirement p_w are all affected by the change. The magnitude of their change is proportional to the change in density ϱ.

Summing up, we can write

$$\dot{V}_1 = \dot{V}_2$$

$$\Delta p_{t2} = \Delta p_{t1} \cdot \frac{\varrho_2}{\varrho_1} = \Delta p_{t1} \cdot \frac{T_1}{T_2}$$

This relationship applies to total pressure increase generated by the fan as well as to system resistance.

$$\Delta p_{d2} = \Delta p_{d1} \cdot \frac{\varrho_2}{\varrho_1} = \Delta p_{d1} \cdot \frac{T_1}{T_2}$$

$$P_{W2} = P_{W1} \cdot \frac{\varrho_2}{\varrho_1} = P_{W1} \cdot \frac{T_1}{T_2}$$

Change in density (from ρ_1 to ρ_2, i.e. from +20°C to +15°C in this example)

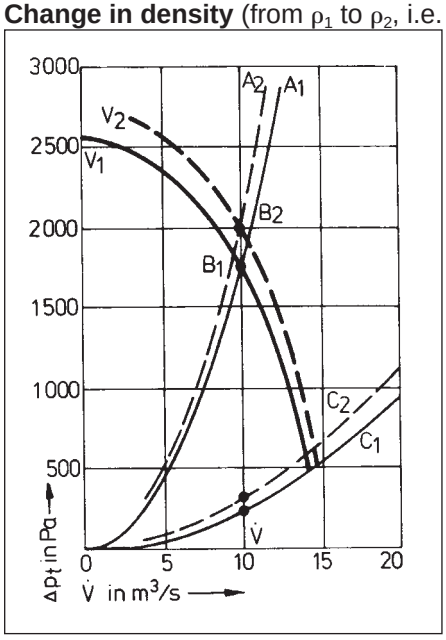

linear

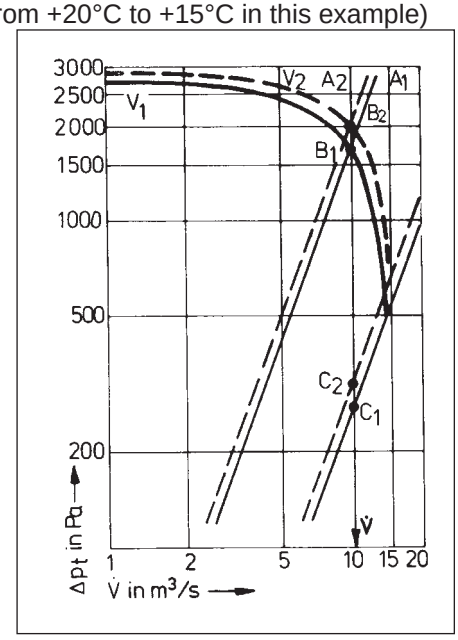

log-log

5.2 Dimensionless variables

To facilitate the assessment and comparison of fans with regard to their suitability for individual applications, dimensionless variables have been defined for key properties:

a) Efficiency

(Refer to Fig. 5.1)

$$\eta = \frac{\Delta p_t \cdot \dot{V}}{P_w}$$

with Δp_t in Pa, V in m³/s, and P_w in W. Efficiency η denotes the ratio of the fan's power output to the required shaft power input. It thus measures the quality of the energy conversion process performed by the fan.

b) Pressure coefficient

$$\psi = \frac{\Delta p_t \cdot f^*}{\frac{\varrho}{2} \cdot u_2^2}$$

with Δp_t in Pa, ρ in kg/m³ and u_2 in m/s. Coefficient ψ measures the total pressure difference delivered by a fan at a given blade tip velocity.

c) Flow coefficient

$$\varphi = \frac{\dot{V}}{u_2 \cdot \frac{\pi \cdot d_2^2}{4}}$$

with V in m³/s, u_2 in m/s and d_2 in m. Flow coefficient j reflects the volume flow discharged by a fan at a given outer impeller diameter and blade tip speed.

d) Power coefficient

$$\lambda = \frac{\varphi \cdot \psi}{\eta}$$

λ is a measure of the shaft power requirement.

e) Diameter coefficient

$$\varrho = \frac{\psi^{\frac{1}{4}}}{\varphi^{\frac{1}{2}}}$$

This variable indicates by how many times the outside impeller diameter exceeds that of a reference fan with ψ = 1 and φ = 1.

f) Tip speed ratio

$$\sigma = \frac{\varphi^{\frac{1}{2}}}{\psi^{\frac{3}{4}}}$$

This parameter indicates by how much the impeller runs faster or slower than the reference fan having ψ = φ = 1.

g) Throttle coefficient

$$\tau = \frac{\varphi^2}{\psi}$$

τ is the parameter for the parabolic system graph in the dimensionless field of characteristic curves.

*)Neglected in ventilation and air-condition technics (Δpt < 2500 Pa)

2

5.3 Selection criteria

Using the above dimensionless parameters, it is now possible to compare the main fan designs:

I. **Backward curved blades** [refer to section 4.2.1]. **(high-performance fan, abbreviated to „RA“)**

II. **Backward inclined straight blades** [refer to section 4.2.2]. **(high-performance dust fan, abbreviated to „RA $_{St}$“)**

III. **Radial ending blades** [refer to section 4.2.3]. **(also referred to as conveyor fan, abbreviated to „RA $_{TR}$“)**

IV. **Forward curved blades** [refer to section 4.2.4]. **(also referred to as drum rotor-fan, abbreviated to „RV“)**

All centrifugal fans are assumed to possess a spiral casing. Plug-in fans are not taken into account in the present selection criteria.

V. **Axial flow fan with outlet guide vanes** [refer to 3.2 and 3.3]. **(abbreviated to „AXN“)**

Comparison between RV/RA and AXN fans:

Flow coefficient:
The RV fan has by far the highest flow coefficient (max. 1,2) when compared to AXN (0,38) and RA$_{TR}$ (0,55).

Pressure coefficient:
RA fans have a steeper characteristic curve. This becomes evident if we compare deviations of the system characteristic curve A which intersects the fan's characteristic curve at B. If the system characteristic curve A is lower than calculated (A1, point of intersection B1) or higher than calculated (A1, B1) in practical system operation, changes in pressure coefficient and hence, volume flow rates, remain small.

The situation is similar with the AXN fan, but it should be noted here that stalling will occur from a certain flow coefficient threshold onwards (in this case, 0,23), i.e. an appropriate airflow over the blade profile is no longer ensured.

Axial-flow fans must never be operated in the stall range. They must always be dimensioned with an ap-

Centrifugal fan with backward curved blades „RA“

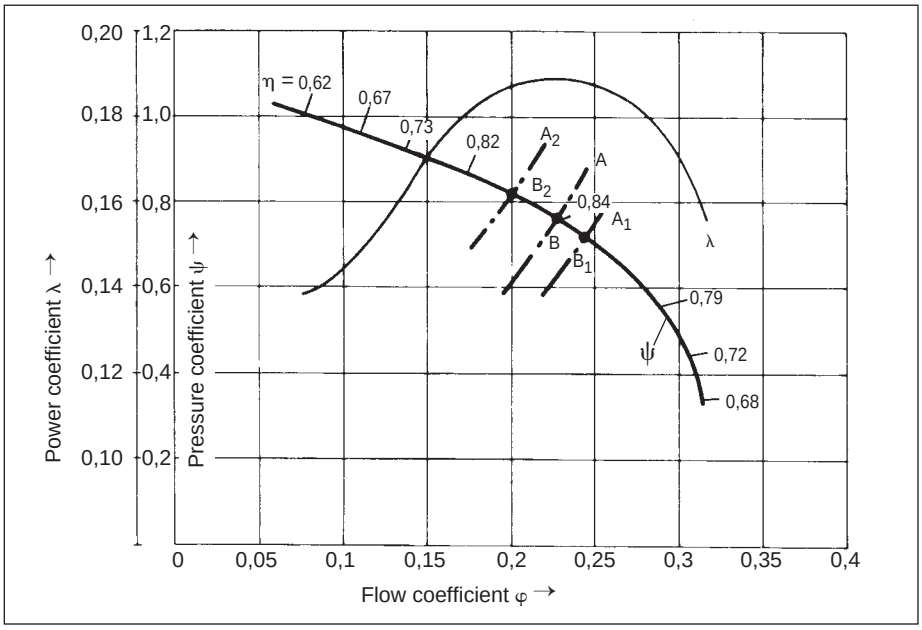

Centrifugal fan with backward inclined straight blades „RA$_{ST}$“

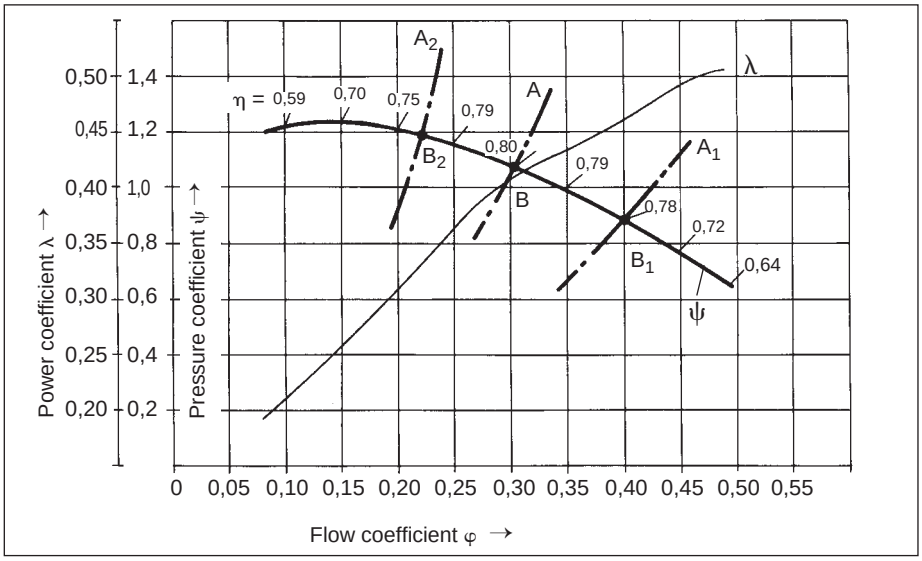

Centrifugal fan with radially ending blades „RA$_{TR}$“

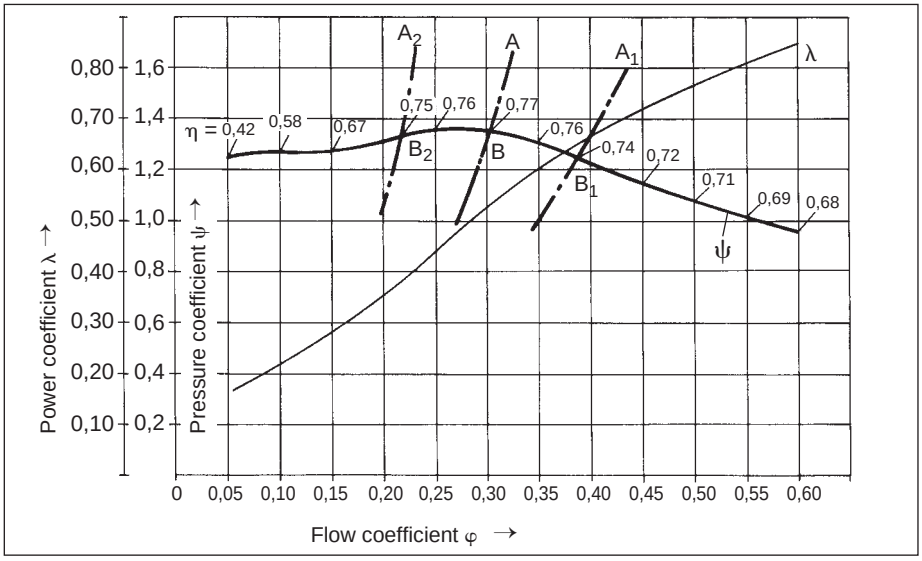

propriate safety margin separating them from the critical point.

RV fans have a flat characteristic curve, i.e. slight pressure variations will result in major volume flow changes.

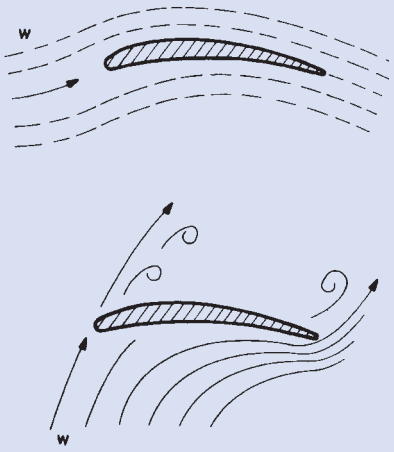

Efficiency:
The RA fan has the highest efficiency (0,84), followed by the AXN unit (0,82). With a view to safety, only 0,78 of this should be utilized on an AXN fan. RV fans, on the other hand, achieve modest efficiencies at best (max. 0,69).

Power coefficient
The RA fan draws maximum power at approximately its highest efficiency and should be dimensioned with this characteristic in mind. It makes the fan safe against overloading, given that the power demand will decrease both when it is throttled and when volume flow increases. Shaft power requirement of AX fans tends to be quite constant over the rating range. RV units, on the other hand, exhibit a rapid increase in power demand when the volume flow rises; an overload risk would therefore exist if, e.g. the system resistance should turn out to be less than projected in theory.

Diameter coefficient
This is lowest in the case of the AXN fan (1,6 at η_{max}), attesting to this fan's main advantage, viz. compact build. RV comes next at 1,8, followed by RA fans at 2,0.

Tip speed ratio
The highest φ and ψ values at minimum blade tip velocities are achieved by the RV fan (σ = 0,36), compared with 0,6 on RA and 0,95 on AXN units.

Centrifugal fan with forward curved blades „RV“

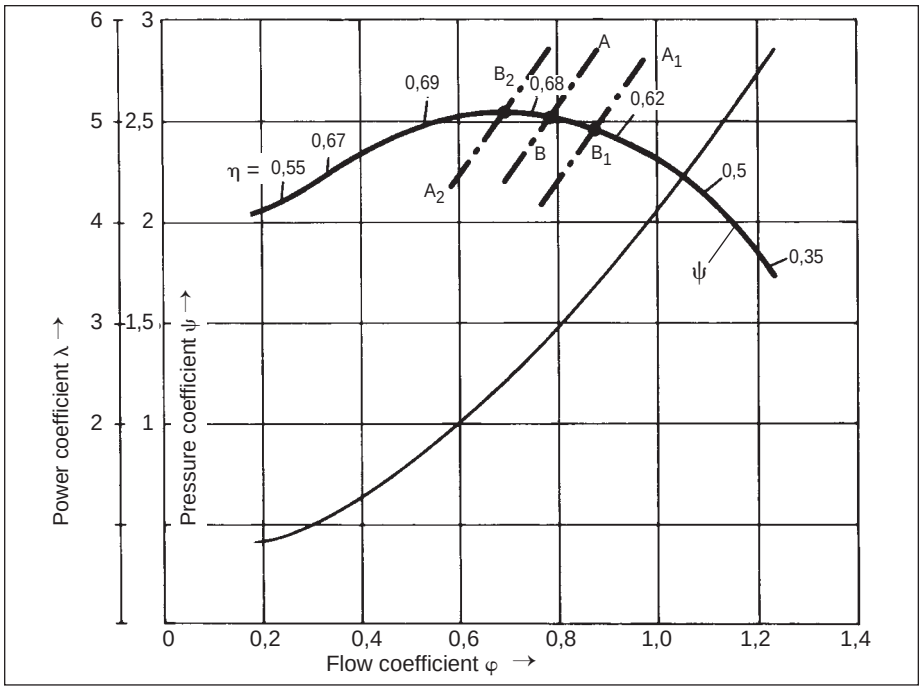

Axial-flow fan with outlet guide vanes „AXN“

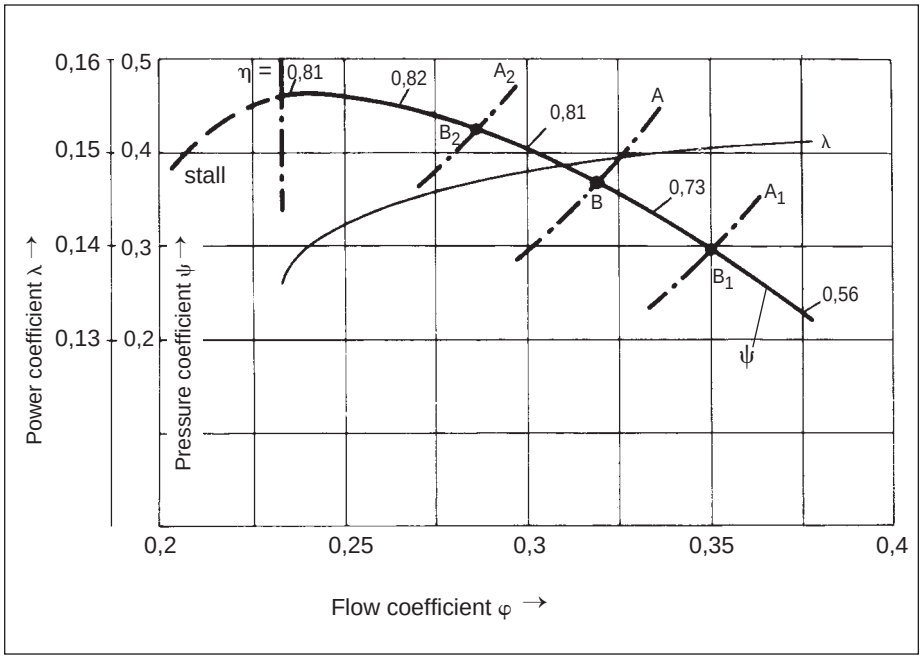

2

5.4 Parallel operation

Where a very high volume flow is specified, it is possible to operate two or more fans in parallel. Double-inlet centrifugal fans are an example of parallel operation, although here the two fans are rigidly interconnected. In a classic parallel fan arrangement the individual units are run independently of each other. From a flow control point of view, such set-ups are useful for increasing or decreasing throughput by bringing the fans selectively on stream.

To determine the characteristic curve of parallel fans it is necessary to add their volume flows at identical Δp_t values (as in the example of the RA 11.1, NG 800 centrifugal fan).

V_1 = Characteristic curve of one fan

V_2 = Joint characteristic curve of both fans

B_1 with $\dot{V}_1$ and Δp_{t1} = operating point when one fan is running.

B_2 with $\dot{V}_2$ and Δp_{t2} = operating point when both fans are running.

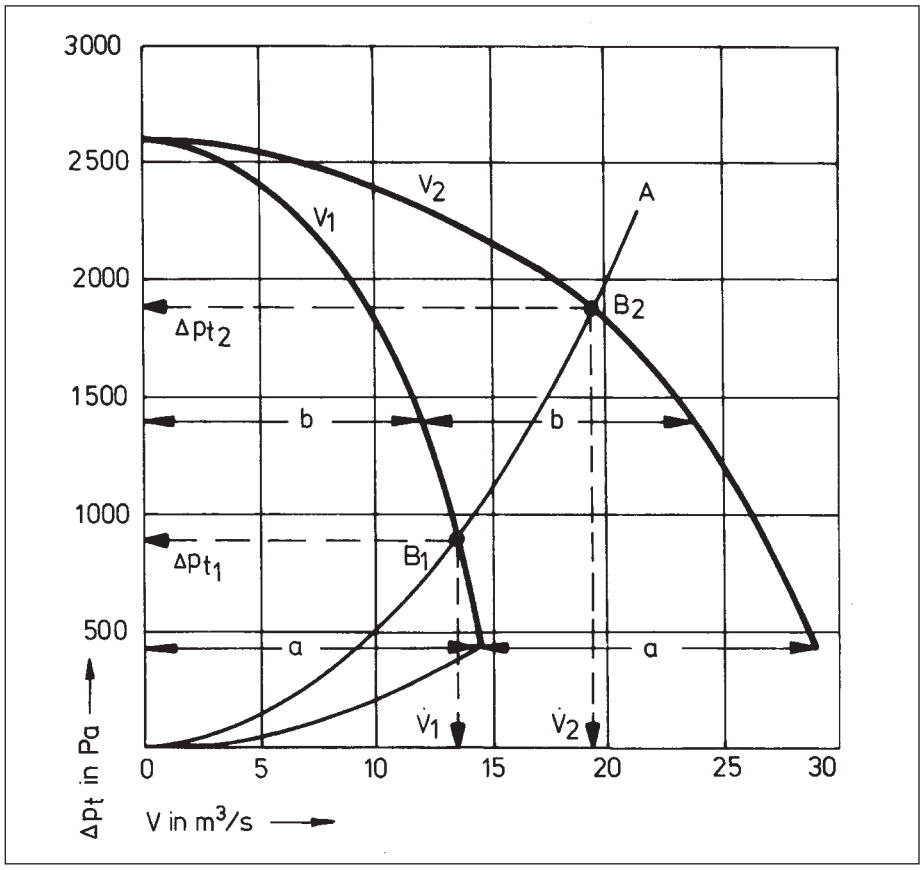

5.5 In-line/series operation

To overcome exceptionally high resistances, two or more fans may be arranged in series. In this configuration total pressures Δp_t would theoretically have to be added, while $\dot{V}$ would remain constant. However, this is not achievable in practice. A real-life system of this type encounters losses, chiefly due to inferior inflow conditions prevailing at the second stage.

V_1 = Characteristic curve of one fan

V_2 = Joint characteristic curve of both fans

B_1 with $\dot{V}_1$ and Δp_{t1} = operating point when one fan is running.

B_2 with $\dot{V}_2$ and Δp_{t2} = operating point when both fans are running.

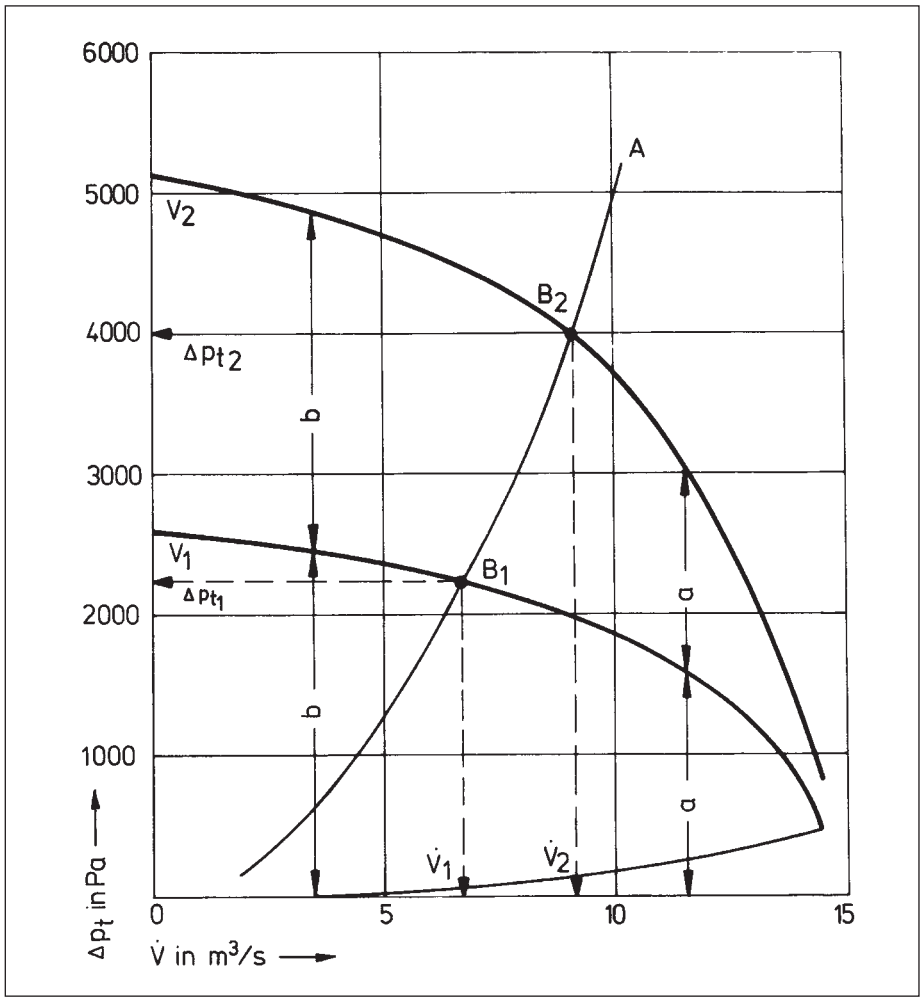

5.6 Pressure measurement on fans

In aerodynamic engineering it is standard practice to treat pressures above the atmospheric pressure p_o (barometer reading) as absolute values. This is acceptable if the ambient air pressure is taken as the „zero“ reference level. As a result, one may obtain negative static pressures, for instance on the inlet side of fans.

The total pressure difference across a fan is the difference between total pressures on its inlet and outlet side

$$\Delta p_t = p_{t2} - p_{t1} = p_{s2} + p_{d2} - (p_{s1} + p_{d1})$$

$$= p_{s2} - p_{s1} + p_{d2} - p_{d1}$$

$$= \Delta ps + \Delta p_d$$

In other words, the total pressure difference is the sum of the static pressure difference Δp_s and the dynamic pressure difference Δp_d between the fan inlet and outlet side (with Δp_s and Δp_d being measured as mean values across the fan's inlet or outlet cross-section, respectively).

Examples of measuring arrangements on centrifugal fans

a) Outlet side resistances, free fan inlet

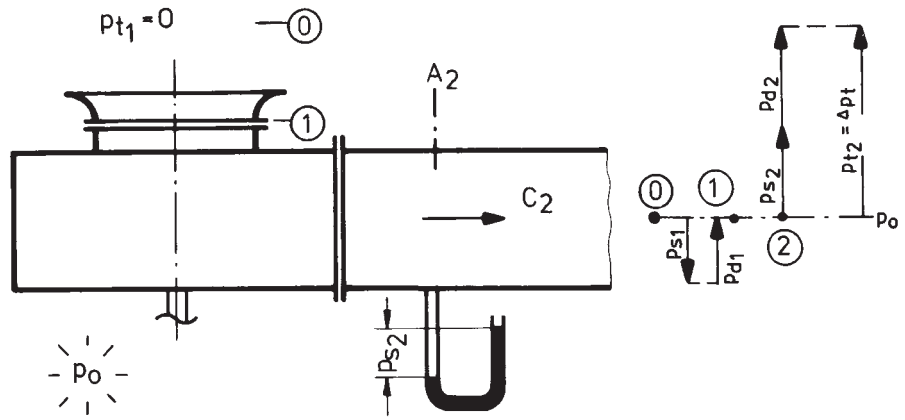

$\Delta p_t = p_{s2} + p_{d2} = p_{t2}$

$= p_{s2} + \frac{\rho}{2} c_2^2$, da $p_{t1} = 0$!

b) Inlet side resistances, free fan outlet

1. without diffuser

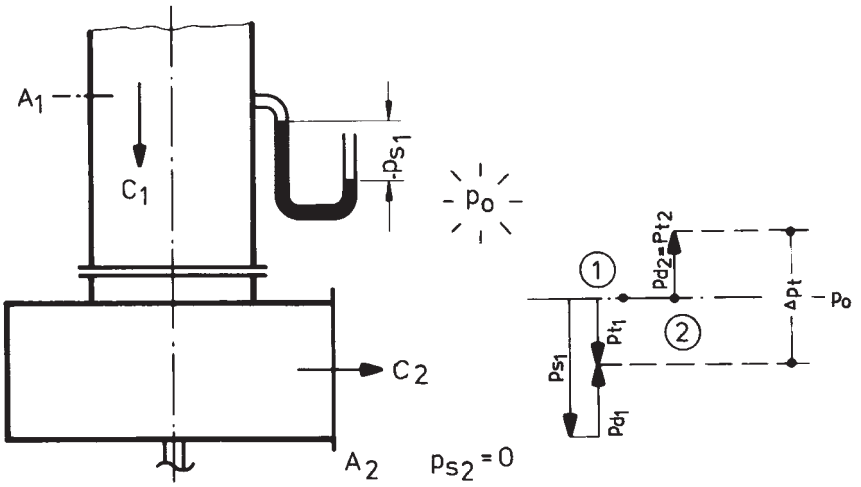

$\Delta p_t = p_{s1} - p_{d1} + p_{d2}$

For the particular case that $A_1 = A_2$ we obtain $\Delta p_{d1} = p_{d2}$

Hence $p_t = p_{s1}$

2

2. with diffuser

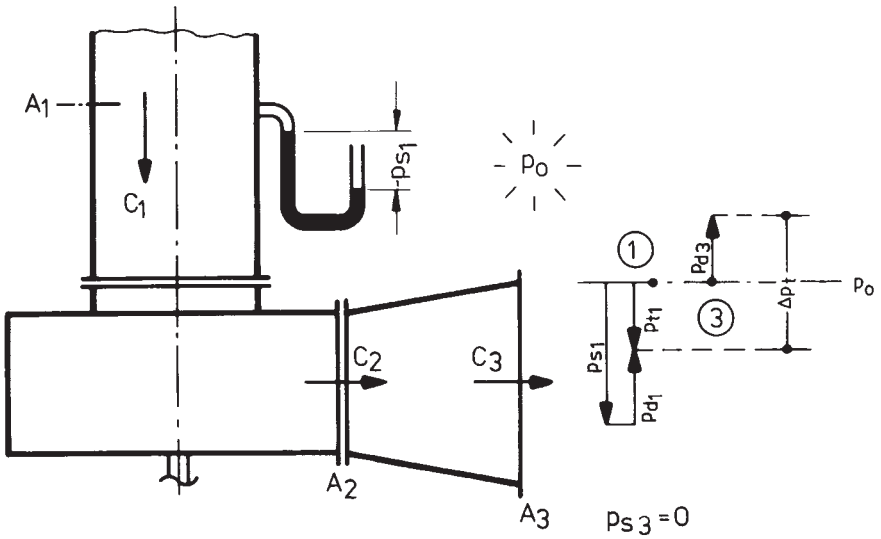

$\Delta p_t = p_{s1} + p_{d3} - p_{d1}$

c) Outlet and inlet side resistances

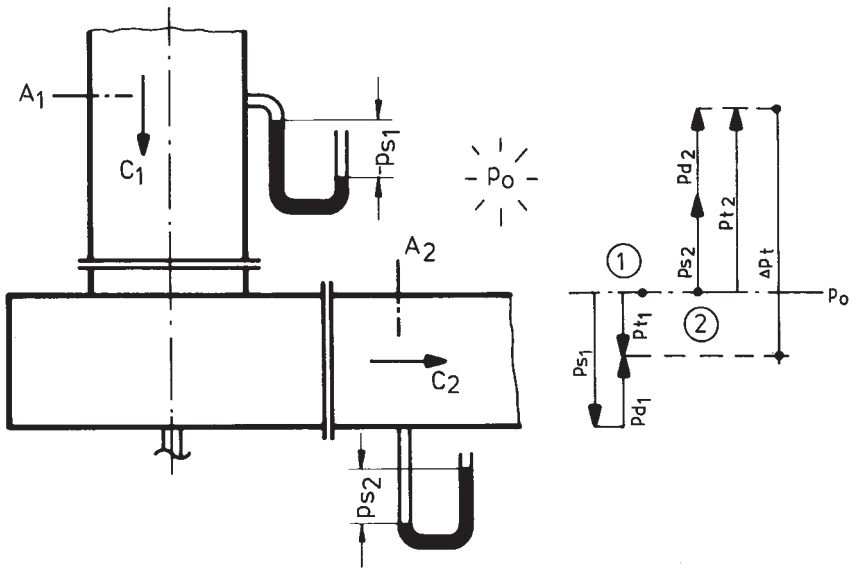

$\Delta p_t = p_{s2} + p_{s1} + p_{d2} - p_{d1}$

For the particular case that $A_1 = A_2$ we obtain
$p_{d1} = p_{d2}$

Hence $\Delta p_t = p_{s2} + p_{s1}$.

d) Measuring arrangement for a centrifugal fan

While the mean dynamic pressure can be obtained from the measured volume flow, static pressure is more difficult to determine, particularly on the fan outlet side, and there exist several options for doing so. Characteristic curve data should therefore be accompanied by a description of the measuring set-up employed. Thus, it is important to know in the case of a centrifugal fan whether the static pressure was determined on its inlet or outlet side, and in the latter case, one should indicate at which point downstream of the fan the measurement was taken (i.e. directly behind the guide vanes or at some distance from them).

In the present example pressure measurement is taken on the inlet side, with a screen restrictor simulating the upstream system resistance. In preparing the characteristic curves, the dynamic pressure over the entire cross-section is then added arithmetically to the static pressure reading. Measurements with and without outlet side ducting give the same results. On the other hand, static pressure values determined on the outlet side will vary according to whether the probe is mounted directly downstream of the guide vanes or at some distance into the ducting. This is due to the ring current exiting the guide vane assembly; a certain flow path is necessary for the medium to become homogeneously distributed again. As it does so, part of the dynamic pressure is converted into static pressure (pressure recovery), while the remainder is lost as so-called hub impact loss.

Example:
On an axial-flow fan with a hub ratio of 0,56, the mean dynamic pressure in the ring flow is equal to:

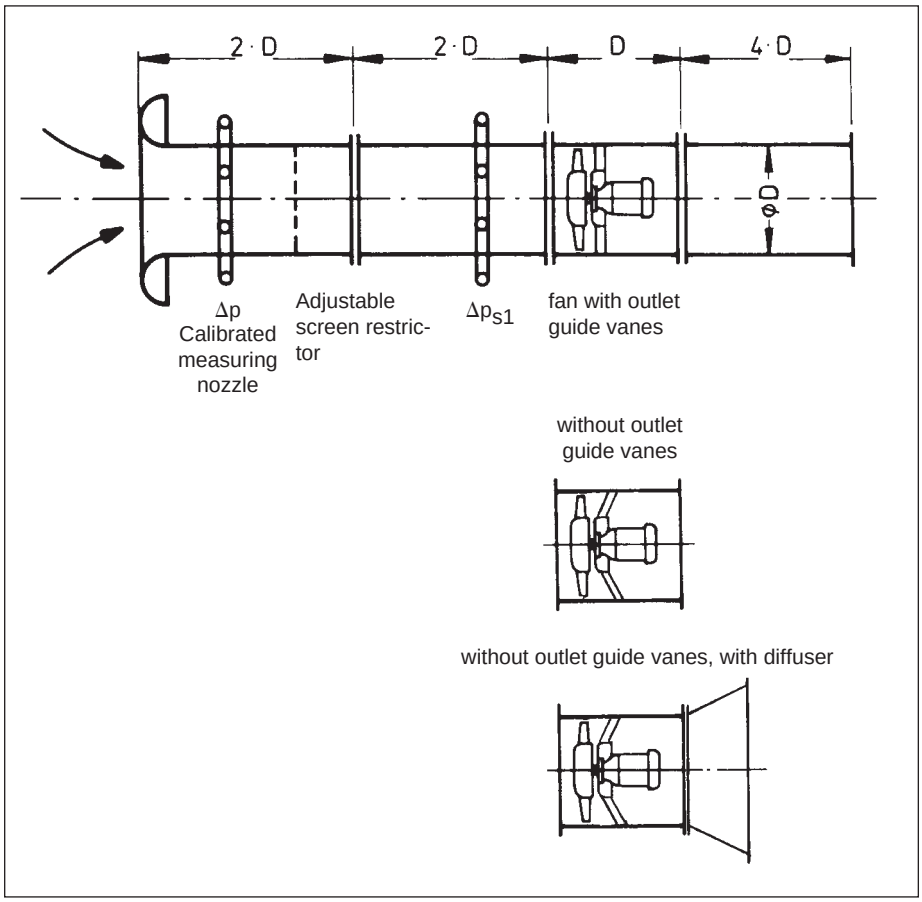

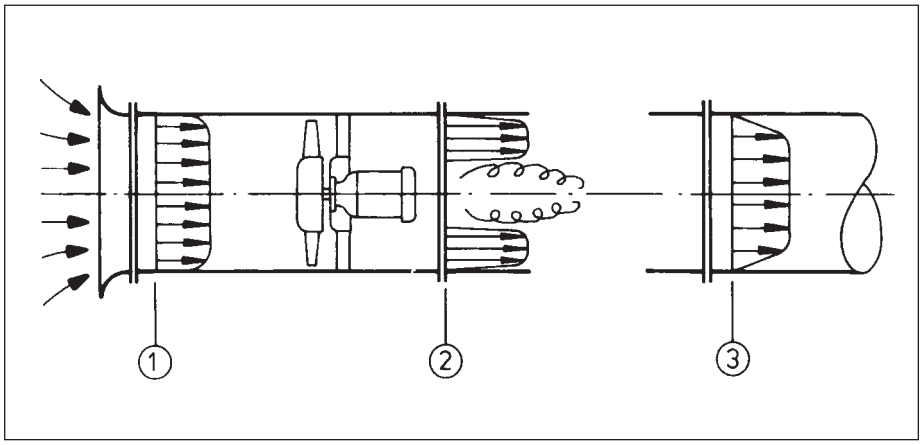

Velocity profiles: (1) upstream of the axial-flow fan
(2) directly downstream of guide vanes
(3) 2-4D downstream of fan

$$\dot{V} = c_1 \cdot A_1 = c_R \cdot A_R$$

$$c_1 \cdot \frac{d_1^2 \cdot \pi}{4} = c_R \cdot \frac{\pi}{4} \cdot \left[d_1^2 - (0{,}56\, d_1)^2 \right] = C_R \cdot \frac{\pi}{4} \cdot d_1^2 \cdot (1 - 0{,}56)^2$$
$$= C_R \cdot \frac{\pi}{4} \cdot d_1^2 \cdot 0{,}6864$$

$c_R = 1{,}457 \cdot c_1$ bzw.

$p_{dR} = 1{,}457^2 \cdot p_{d1} = 2{,}12 \cdot p_{d1}$

2

From the above it is evident that the dynamic pressure in the ring flow is more than twice as high as the pressure measured across the entire duct area.

The hub loss, according to 2.4.2.1, can be written as

$$\Delta p = \frac{\varrho}{2}(c_R - c_3)^2 = 0{,}21\ p_{d3} = 0{,}21\ p_{d1}$$

This must be viewed as the „inherent loss“ of each fan. It is already accounted for in the characteristic curve if the measurements are taken a sufficient distance downstream of the impeller.

If the measurements are taken on the inlet side on a fan without downstream ducting and the dynamic pressure of the ring flow is included in the total pressure difference, then the hub loss is not reflected in the characteristic curve. This fact would need to be taken into account at the fan dimensioning process.

e) General notes

If it is intended to take static pressure measurements via orifices in the duct wall, several orifices should be spread evenly over the duct circumference. These should then be interconnected via a ring line. This is the best way to compensate for variations and to obtain a mean value. The static pressure can only be assumed to be near-constant over the cross-sectional area if the flow lines at the measuring point are straight. This will not be the case downstream of elbows (refer to section 2.7), fittings and baffles. If conditions are not right for a pressure measurement via wall orifices, the cross-sectional area must be scanned with a pressure probe, and the mean value must be determined from the grid point readings.

Acceptance and performance measurements are governed by VDI Guideline 2004, which describes all details concerning test set-up and execution.

VI. Speed control

In the following paragraphs, the term „fan control“ is deemed to refer to the control of the volume flow.

6.1 Throttle control

The most straightforward but least efficient control method is that of throttling the flow. An adjustable restricting device is fitted into the system to vary the system’s characteristic curve. The position of the points of intersection with the fan curve will thus be changed, i.e. shifted to the left (smaller volume flow).

As an example, let us again consider TLT Turbo GmbH’s RA 11.1 / NG 800 fan.

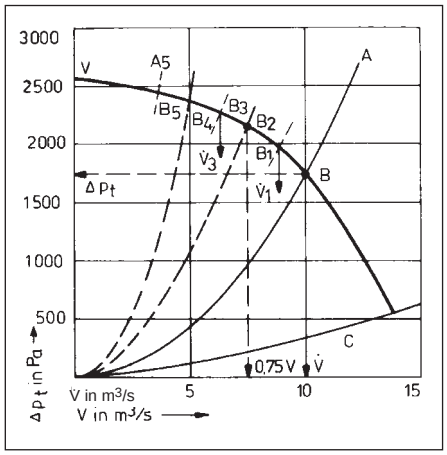

Efficiencies at the points of intersection:

B : 83 % B_1: 84 % B_2: 82 %

B_3: 77 % B_4: 70 % B_5: 63 %

It is evident from this example that due to throttling of the flow, the characteristic curve of the fan is intersected further to the left, i.e. at a higher pressure, which requires additional throttling. Moreover, efficiency of the fan is reduced as the degree of throttling increases.

Throttling the volume flow V by about 25% from its level at intersection point B will bring down shaft power input demand from P_W = 21,1 kW to P_W’ = 20,2 kW. This is equivalent to a 4% decrease.

6.2 Blade pitch control

A more efficient, but also more complex method is that of controlling the fan speed (rpm) via appropriate variable-speed electric motors. One advantage of this control approach is that the fan can always be operated in a favourable efficiency range. The characteristic curve of the system remains the same, while that of the fan will change according to the proportionality laws. On the downside, this control method involves higher capital outlay due to the cost of the electric frequency converter, as well as inferior efficiencies in part-load operation.

Example:

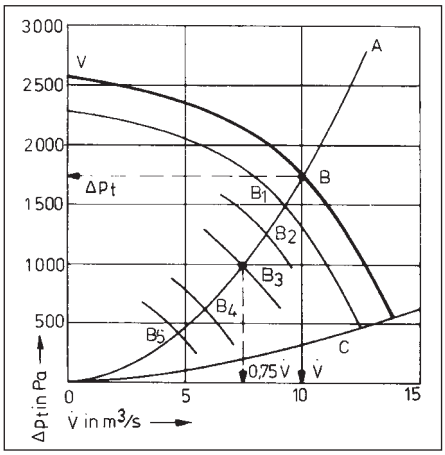

Efficiency is 83% at all points of intersection!

Reducing the volume flow V by about 25% from its level at intersection point B (i.e. to a value corresponding approximately to intersection point B_3) will bring down shaft power input demand from P_W = 21,1 kW to P_W' = 8,8 kW.

This is equivalent to a 58% decrease. The gain achieved over mere throttling is obvious.

6.3 Blade pitch adjustment

On axial-flow fans with blade pitch adjustment, volume flow can be controlled by changing the blade angle.

Example:

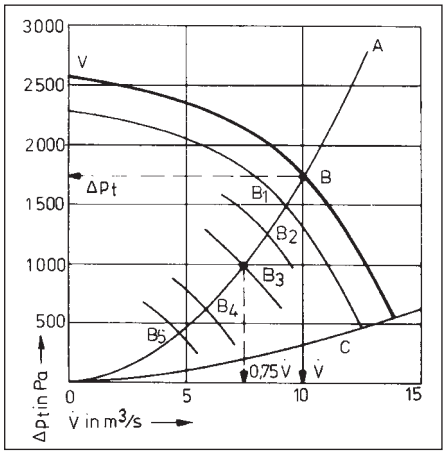

Efficiencies at the points of intersection:

B : 77 % B_o: 78 % B_1: 70 %

B_2: 59 % B_3: 50 % B_4: 40 %

B_5: 30 %

Reducing the volume flow V by about 25% from its level at intersection point B (i.e. to a value corresponding approximately to intersection point B2) will bring down shaft power input demand from PW = 10,4 kW to PW' = 5,7 kW. This corresponds to a 45% decrease.

Controlling the volume flow of axial fans via the blade pitch setting will not quite yield the efficiencies achieved by rpm control. On the other hand, the associated electrical losses are eliminated.

The investment cost of an axial-flow fan with „blade pitch adjustment under load“ (i.e. on the moving fan) is significantly higher than that of an equivalent unit whose blades can only be adjusted when stationary. The additional expense will generally pay off only if, in the specific operating environment, blades must be adjusted very often.

6.4 Inlet vane control

Flow control vanes can be fitted on the inlet side of both centrifugal and axial-flow fans. Acting as adjustable guide vanes, they modify the direction of the inlet velocity c1 into the impeller. By imparting an angular momentum (swirl) at the impeller inlet, they produce a change in volume flow.

Example: (TLT-Turbo GmbH centrifugal fan, RA 11.1, NG 800, with adjustable inlet vanes)

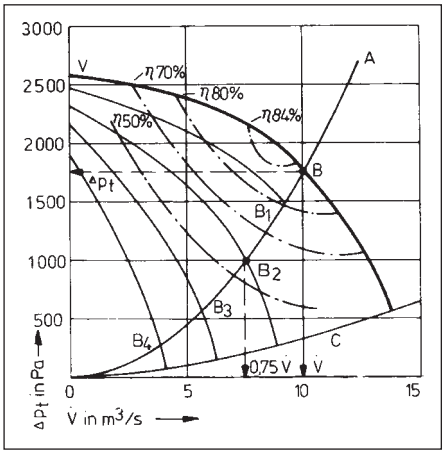

Efficiencies at the points of intersection:

B : 83 % B_1: 80 % B_2: 60 %

B_3: 40 % B_4: 30 %

Reducing the volume flow V by about 25% from its level at intersection point B (i.e. to a value corresponding approximately to intersection point B_2) will bring down shaft power input demand from P_W = 21,1 kW to PW' = 12,5 kW. This corresponds to a 41% decrease.

For large volume flow changes, inlet vane control makes sense - due to the steep efficiency decline - only when combined with a pole-changing motor. For instance, a pole-changing motor with three speeds (100, 75 and 50% of nominal rpm) offers a broad control range at an optimum efficiency.

Benefits of flow control based on adjustable inlet vanes include low investment cost and the fact that squirrel cage motors may be used.

VII. Drive unit dimensioning

7.1 Motors

2 Power demand P_W on the fan shaft can be calculated (refer to section 5.1). It is common practice to add certain power reserve to the calculated requirement P_W. The amount of this margin is typically 5-10% for direct-drive fans and 10-20% on belt-driven units, depending on the size.

An important motor selection parameter is its accelerating torque. This must be in a certain proportion to the fan's moment of inertia, the fan thus starting up properly.

The mass moment of inertia J refers only to rotary fan components, i.e. impeller, hub and shaft. It is the product of multiplying the mass of these rotating parts with the square of the so-called „inertia radius". Typically, this parameter is determined experimentally and stated by the fan manufacturer. Motor manufacturers usually accept an acceleration time of 10 seconds. The selection of the motor can thus be validated using the following expression:

$$t_A = \frac{J \cdot \omega}{M_b}$$

where: $\omega = \frac{\pi \cdot n}{30}$; $t_A = \frac{J \cdot n_M}{9{,}55 \cdot M_b}$

t_A = acceleration time in seconds

J = mass moment of inertia of the fan wheel and motor in kgm^2

n_M = motor rpm

M_b = mean acceleration torque in Nm, calculated as the difference between motor torque M_m and fan torque M_w

The above equation applies to direct-driven fans. In the case of V-belt drive systems, the so-called reduced moment of inertia must be used:

$$t_A = \frac{J_{red} \cdot n_M}{9{,}55 \cdot M_b}$$

$$J_{red.} = J_M + \left(\frac{n_v}{n_M}\right)^2 J_V$$

J_V = Impeller moment of inertia

J_M = Motor moment of inertia

$J_{red.}$ = Sum of the moments of inertia ($J_V + J_M$)

The torque MW can be calculated from shaft power P_W and the fan speed n_v. The accelerating torque Mb can be obtained from the motor manufacturer.

7.2 V-belt drive

V-belt drives are widespread in ventilation and air-conditioning equipment. A V-belt has a very good adhesion, being 'wedged' into the groove of the pulley. It should be dimensioned so as to ensure that the belt speed will not exceed 20 m/s. Belts are selected in accordance with DIN 2218 on the basis of manufacturers' catalogue data, which allow the engineer to determine a given V-belt's power transmission capability as a function of belt profile, pulley diameter and rpm

7.3. Couplings

Couplings serve to connect rotary machine components - in the present case, they link the motor to the fan. They are required to transmit a torque M at a given rotational speed.

As a result, the main coupling dimensioning parameters are fan speed nv and fan shaft torque MW, or shaft power P_W, respectively. The correlation can be written thus:

$$M_W = \frac{P_W}{\omega} \text{ bzw. mit } \omega = \frac{\pi \cdot n}{30}$$

$$M_W = 9549 \cdot \frac{P_W}{n_v}$$ where

M_w = fan torque in Nm

P_w = shaft power in kW

n_v = fan speed in rpm

The couplings used in ventilation and air-conditioning applications are typically of the resilient, direct-acting type. In special cases - e.g., if the motor does not attain its nominal r.p.m. within the maximum acceleration time - it is possible to use centrifugal clutches. They allow the motor to run up to its nominal speed first, while the fan is then accelerated to its operating r.p.m. via friction forces with an appropriate time lag.

VIII. Explosion protection on fans (current status Jan. 2005)

8.1 Standards situation

Since the enactment of ATEX 100, previous national regulations such as VDMA standard sheet 24169, Parts 1 and 2, are no longer applicable.

Although the relevant European product standard for fans is still in the draft phase, Parts 1-7 of DIN EN 13463 already exist.

EU Directive 94/9/EC (ATEX 95) regulates the approximation of the laws of European Union member states concerning equipment and protective systems intended for use in potentially explosive atmospheres.

ATEX 137, or Directive 1999/92/EC, stipulates minimum regulations for the safety and health protection of workers at risk from potentially explosive atmospheres.

While ATEX 95 addresses manufacturers of equipment, components and protective apparatus, ATEX 137 covers the installation of equipment and adaptations of existing systems.

The above directives have been applicable in Germany since July 1, 2003.

Basic requirements on the design, construction, testing and marking of non-electrical equipment are defined in the European standards series prEN 13463, Parts 1 - 8.

Fans in a general sense are treated as non-electrical equipment in this series, which contains the following specific standards:

DIN EN 13463-1, April 2002: Non-electrical equipment for potentially explosive atmospheres - Basic method and requirements, with amendments of July 2003

pr EN 13463-2: Non-electrical equipment for use in potentially explosive atmospheres - Protection by flow restricting enclosure

pr EN 13463-3: Non-electrical equipment for use in potentially explosive atmospheres - Protection by flameproof enclosure

pr EN 13463-4: Non-electrical equipment for use in potentially explosive atmospheres: Protection by inherent safety

EN 13463-5, March 2004: Non-electrical equipment for use in potentially explosive atmospheres - Protection by constructional safety

pr EN 13463-6: Non-electrical equipment for use in potentially explosive atmospheres - Protection by control of ignition source

pr EN 13463-7: Non-electrical equipment for use in potentially explosive atmospheres - Protection by pressurization

pr EN 13463-8: January 2004: Non-electrical equipment for potentially explosive atmospheres - Protection by liquid immersion

EN 50303, Group 1, category M1 equipment intended to remain functional in atmospheres endangered by firedamp and/or coal dust

DIN EN 1127-1, Oct. 1997: Explosive atmospheres - Explosion prevention and protection - Part 1: Basic concepts and methodology

DIN EN 1127-2, July 2002: Explosive atmospheres - Explosion prevention and protection - Part 2: Basic concepts and methodology for mining

Other German standards include the following:

DIN 14428, Sept. 1988: Firefighting equipment - Explosion-proof portable transfer pump with electric motor - Requirements, type and acceptance test

DIN 14427, March 1995: Firefighting equipment - Explosion-proof portable transfer pump for dangerous fluids, with electric motor - Requirements, testing

DIN 14642, Oct. 1995: Portable searchlight with mounting equipment for vehicles, explosion-proof

DIN 22419-1, Nov. 1995: Electrical apparatus for potentially explosive atmospheres for mining - Cable entries - Part 1: Safety requirements and testing

DIN 22419-2, Nov. 1995: Electrical apparatus for potentially explosive atmospheres for mining - Cable entries - Part 2: Gland adaptors for entries; safety requirements and testing

DIN 22419-3, Nov. 1995: Electrical apparatus for potentially explosive atmospheres for mining - Cable entries - Part 3: Gland flanges for entries; safety requirements and testing

DIN EN 50016 (VDE 0170/0171, Part 3), May 1996: Electrical apparatus for potentially explosive atmospheres - Pressurized apparatus "p", German version, EN 50016:1995

DIN EN 50039, April 1982: Electrical apparatus for potentially explosive atmospheres - Intrinsically safe electrical systems "i" - (VDI specification for electrical apparatus for potentially explosive atmospheres for mining)

DIN EN 50050, June 2002: Electrical apparatus for potentially explosive atmospheres - Electrostatic hand-held spraying equipment; German version EN 50050:2001

DIN EN 60079-10 (VDE 1065 Part 101), Sept. 1996: Electrical apparatus for explosive gas atmospheres - Part 10: Classification of hazardous areas (IEC 60079-10:1995) German version EN 60079-10:1996

DIN EN 60079-14 (VDE 0165 Part 1), Aug. 1998: Electrical apparatus for explosive gas atmospheres - Part 14: Electrical installations in hazardous areas (other than mines) (IEC 60079-14:1996); German version EN 60079-14:1997)

DIN EN ISO10807, Jan. 1997: Pipework - Corrugated flexible metallic hose assemblies for the protection of electrical cables in explosive atmospheres (ISO 10807:1994); German version EN ISO 10807:1996

DIN VDE 0170/0171-9, July 1988 Electrical apparatus for explosive gas atmospheres; protective encapsulation "m" German version EN 50028:1987

DIN VDE 0170/171-13, Nov. 1986: Electrical apparatus for potentially explosive atmospheres; requirements for apparatus in zone 10

DIN VDE 0848-5, January 01: Safety in electric, magnetic and electromagnetic fields - Part 5: Protection against explosion

It is recommended to track the harmonization of standards and their transposition into the national systems in the EU's Official Journal and in the German Federal Gazette (Bundesanzeiger), e.g., at

http://europa.eu.int/comm/enterprise/nando-is/cpd

and

http://bundesanzeiger.de

8.2 Product standard for fans

The European product standard for fans is available in draft form as pr-DIN EN 14986, June 2004.

The title of this draft standard is Design of fans working in potentially explosive atmospheres.

Compared to the national code (VDMA standard sheet 24169, Parts 1 and 2), this document imposes a number of changes.

Thus, the following information must appear on the nameplate:

Apparatus group: I or II; a distinction is made according to whether the equipment is intended for use in mining or other applications.

Apparatus category: Categories 1 through 3 express the requisite level of equipment safety to be met by the manufacturer through appropriate design

Conveyed medium: G = gas, D = dust, or GD = gas/dust mixtures

Ignition protection type: Indicates the design safety of apparatus and equipment, with requirements on material combinations, gap dimensions, V-belt, anti-friction bearings, etc.

Explosion group: Defines the type of potentially explosive gas atmosphere in which the equipment is to be used

Temperature class: Defines the acceptable maximum surface temperature on the apparatus

8.3 Marking example:

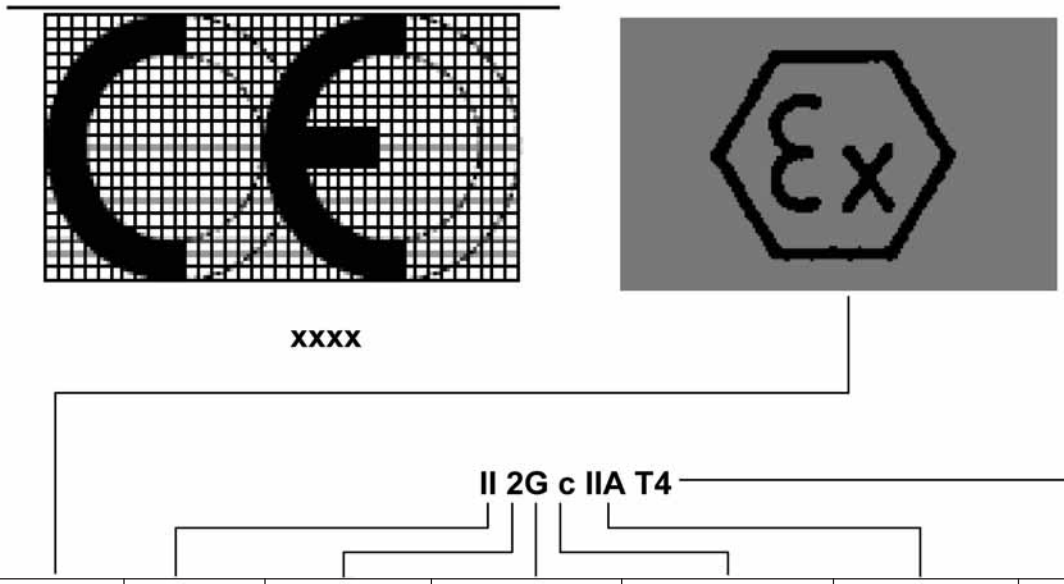

Mark	Apparatus group	Apparatus category	Conveyed medium	Ignition protection	Explosion group	Temperature class
Marking of apparatus for use in potentially explosive atmospheres	I: Mining II: All other applications	for II: 1: even in case of rate equipment malfunctions 2: even in case of frequent equipment malfunctions 3: in normal operation	for II: G: Gases, vapours, fumes D: Air/dust mixture GD: Gas and dust	Material combinations Gap dimensions V-belts Anti-friction bearings etc.	II A II B II C	T1: max. 450° C T2: max. 300° C T3: max. 200° C T4: max. 135° C T5: max. 100° C T6: max. 85° C

8.4 Design notes

Some design recommendations extracted from the product standard are given below.

Category 1 : Gas

- All category 2 requirements must be met.
- Taper-lock hubs and V-belt drives are not permitted
- Tests for gas-tightness must be conducted
- Flame inhibitors must be fitted on the inlet and outlet connection
- Category 1 units for outdoor use must conform to prEN 13463-3

Category 2 : Gas and dust

- All category 3 requirements must be met.
- Units with power inputs exceeding 5.5 kW must not have taperlock hubs.
- Fan housings must be continuously welded
- Anti-friction bearings to be rated for a minimum service life of 40,000 hours

Category 3 : Gas and dust

- Protection against ingress of foreign matter
- Accretion
- Fan drive and coupling per DIN EN 13463-5
- Shaft seal, anti-friction bearings, brakes and brake systems must conform to DIN EN 13463-5
- Units with power inputs exceeding 15 kW must not have taperlock hubs

As regards impeller-housing material combinations, it is recommended to wait for the final vote of the prEN 14968 product standard.

8.5 Explosion protection of fans, illustrated for a direct-driven centrifugal fan

The design of fans for use in potentially explosive atmospheres typically involves the following steps:

❶ An increased gap between the impeller and the inlet nozzle, plus the selection of appropriately matched impeller/nozzle materials.

❷ Use of non-contacting (labyrinth-type) shaft seals to prevent heat build-up, with prevention of air leaks via an additional bypass line to the inlet. The impeller can be provided with reverse flow blades for pressure relief.

❸ Installation of long-life antifriction bearings, special hub-to-shaft attachments to prevent shifting, and fitted pins for securing the bearing housing.

❹ Use of driveshafts of appropriate flexural strength, separation of critical and operating rpm by an appropriately wide margin.

❺ Electrostatic discharge devices (refer to the grounding sketch across)

Two carbon brushes are spring-biased against the fan input shaft. Any electrostatic charge will thus be neutralized via the carbon brushes, their brass holder, and a customer-supplied grounding electrode.

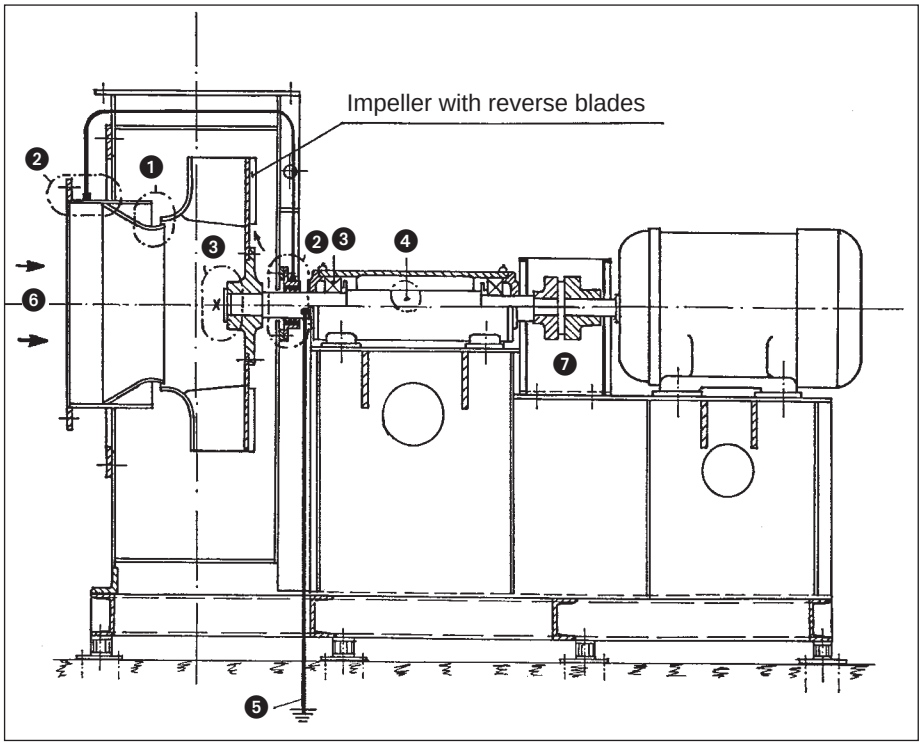

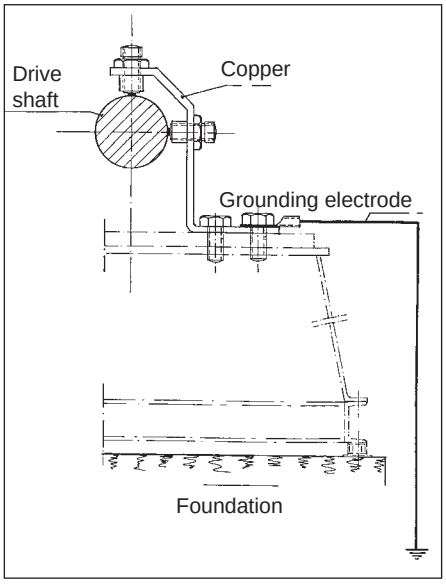

❻ On the process side, the customer should ensure that the fans cannot suck in any foreign matter which might deform components or generate sparks.

❼ Hazardous-duty fans should always be directly driven via a coupling.

IX. Installation and dimensioning notes

2

In dimensioning a fan that is selected on the basis of measured characteristic curves, care should be taken to compare the envisaged field installation scenario with the measuring set-up used in determining the curves. Fans are quite often fitted under unfavourable flow conditions deviating greatly from the rating situation, resulting in them being unable to attain their operating point on the characteristic curve. The following notes are intended to address this circumstance.

9.1 Free-inlet fans without inlet nozzle

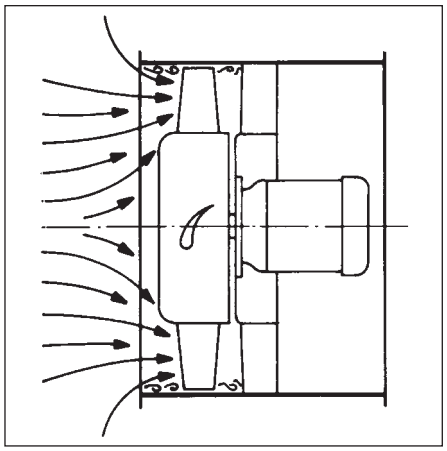

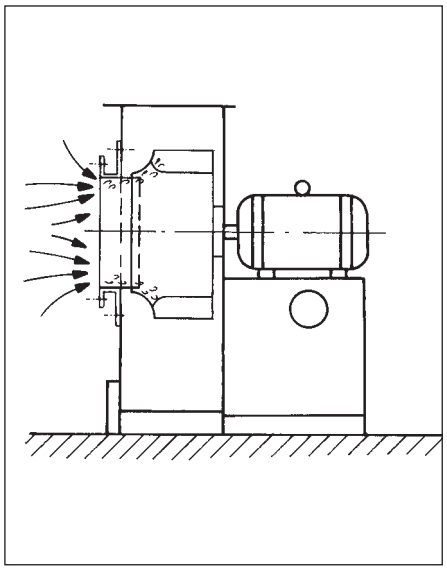

The characteristic curves of a fan are always measured with an inlet nozzle on the manufacturer's test rig. If the nozzle is eliminated, as shown above, the flow lines will show the illustrated pattern due to the sharp flange edges. Restriction of the flow occurs, resulting in unfavourable impeller inlet conditions. These in turn give rise to performance losses, i.e. the fan fails to attain the rig-testing characteristic curve stated in the performance data.

9.2 Free-outlet axial fan

Let us return to the example from section 5.6, paragraph d), where it was calculated that a hub ratio of 0.56 would give the outlet velocity CR = 1.46 c1 and the dynamic pressure pdR = 2.12 pd1.

With this mounting configuration the pressure recovery will be lost. According to section 5.6, it is equal to 2.12 pd1 - 1.12 pd1 = 1.0 pd1, given that the hub impact loss amounts to 1.12 pd1 (here it must be checked if this impact loss is accounted for by the characteristic curve, given the measuring method employed).

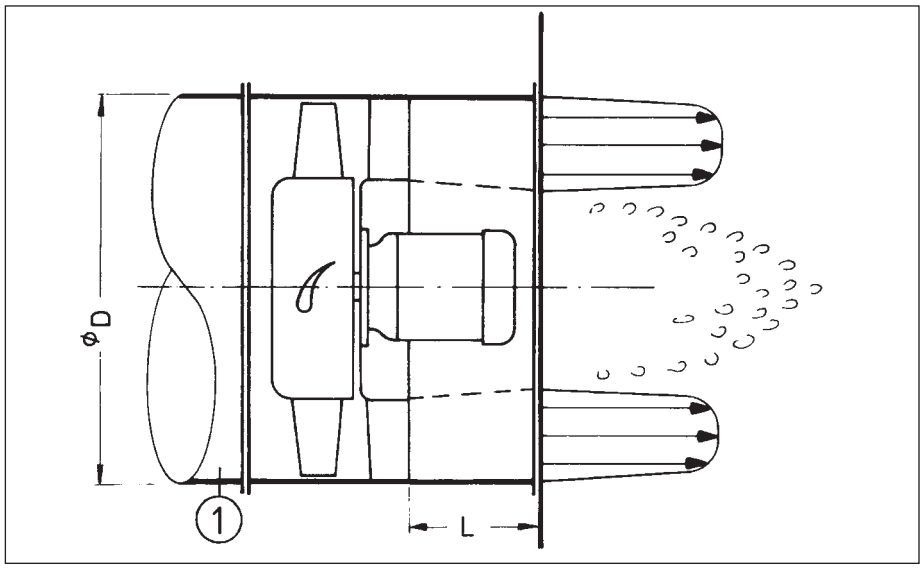

The loss of the pressure recovery of 1 x pd (related to the full cross-sectional area of the duct) must be added to the remaining system resistances when computing flow resistance.

It should also be noted when calculating system resistances that any equipment fitted directly downstream of the fan (e.g. air heaters) will be exposed to higher flow velocities in the blade ring area, which in turn will result in higher drag levels.

The situation can be improved by installing such equipment on the inlet side, or by providing an appropriate diffusor.

In this case, all other factors being equal, the outer diffuser diameter should be 1.25 times the diameter of the axial-flow fan.

The cross-section of the ring thus becomes

$$A_{R3} = \frac{(1{,}25D)^2\pi}{4} - \frac{(0{,}56D)^2\pi}{4}$$

The above gives $C_{R3} = 0{,}8\ c_1$ and $p_{dR3} = 0{,}64\ p_{d1}$. The outlet impact loss can thus be reduced significantly.

Diffusers are very sensitive in terms of their fluid dynamics since fan outlet flow will never be quite regular. As a result, the fluid flow may become detached from the diffusor wall. Such stall effects increase the resistance coefficient ζ.

Also, the diffusor and its losses must actually be deemed part of the duct system, which makes it difficult to model its behaviour. Preferably, fan and diffuser should be measured as an integral unit, as described in the measuring arrangements in section 5.6.

Another option for reducing outlet losses and improving the flow in downstream elements lies in installing a baffle-plate diffuser, or radial diffuser.

Optimum values for

$$\frac{b}{D} \approx 0{,}15 \text{ und } \frac{D'}{D} \geqq 1{,}5$$

have been determined through experiments.

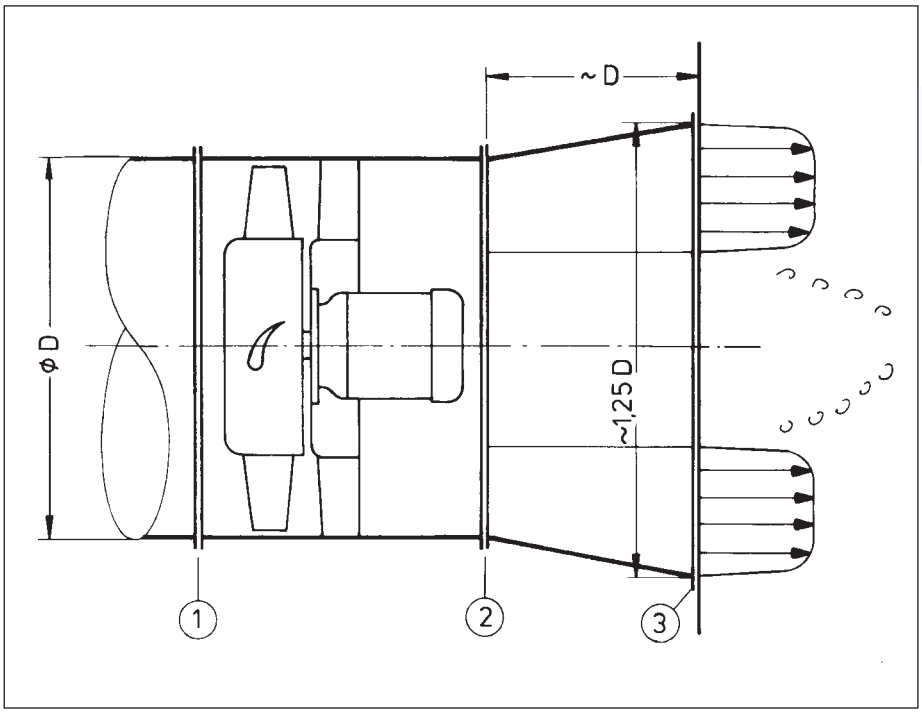

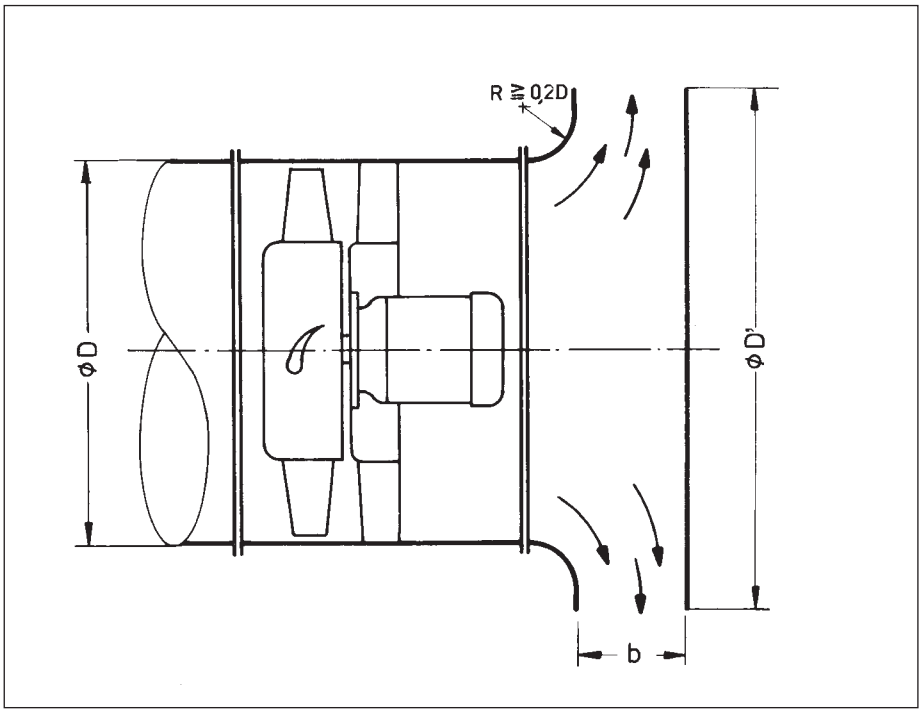

9.3 In-duct fans

When installing a fan into a duct system, care should be taken to minimize interference and ensure maximum flow uniformity on the inlet and outlet side. Arrangements in which the fan inlet is located directly downstream of sudden duct expansion or restriction points, elbows, etc., should be avoided. In particular, the inlet flow should not come at an angle or with angular momentum (swirl), since this may cause stalling in the impeller or other severe forms of performance loss.

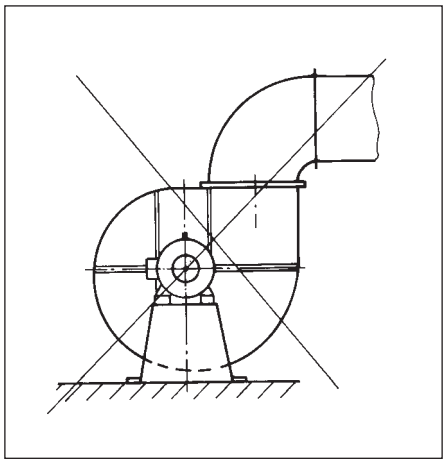

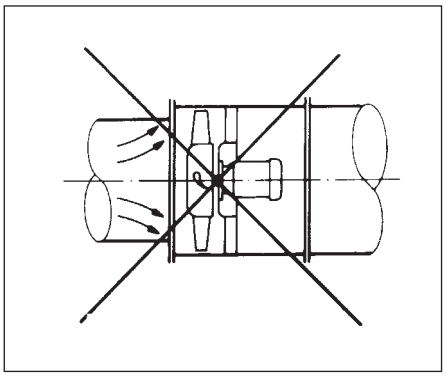

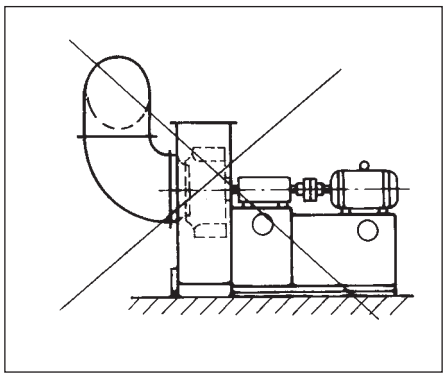

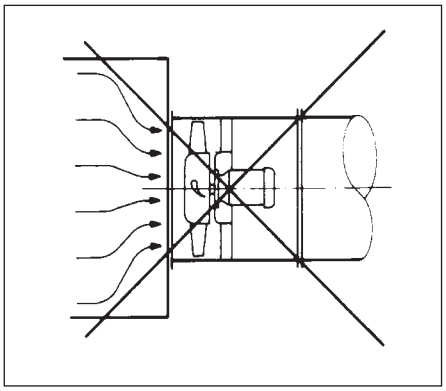

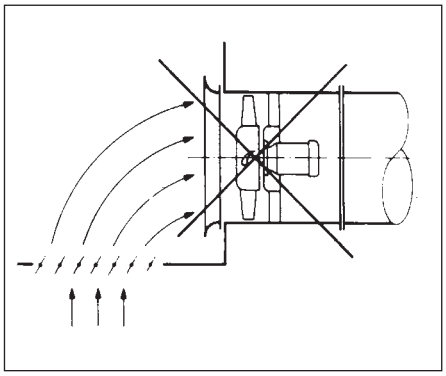

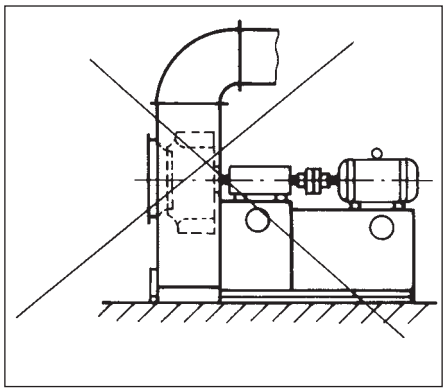

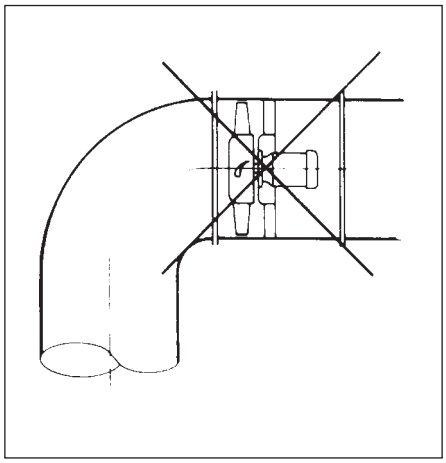

9.4 Parallel and in-series operation

With parallel fan configurations, a problem may arise if the characteristic curves of the individual units have a peak or turning point (as is very much the case with axial-flow fans). The resulting characteristic will then show the following pattern:

Since the loop in the resulting characteristic curve lies close to the apex, a configuration of this type may have three operating points (1, 2, 3) between which the fan alternates (unstable operation). When dimensioning a fan for such a system, care must be taken to ensure that one operating point will be located sufficiently far to the right of the peak (which would be the stall point in the case of axial-flow fans).

If centrifugal fans are arranged in series for pressure boosting purposes, their inherent design will usually require an extended length of ducting between the outlet connection of the first fan and the inlet of the second one. This interconnecting duct can usually be provided with features which ensure a proper inlet flow supply to the second stage. In this case, the in-series configuration can be expected to have a y value equal to the sum of its individual counterparts.

With axial-flow fans, the two stages are typically mounted one directly behind the other. The disturbed outlet flow from stage 1 will thus have an immediate effect on the inlet of stage 2. As a result, the pressure coefficient should not be expected to exceed a value of about 1,6.

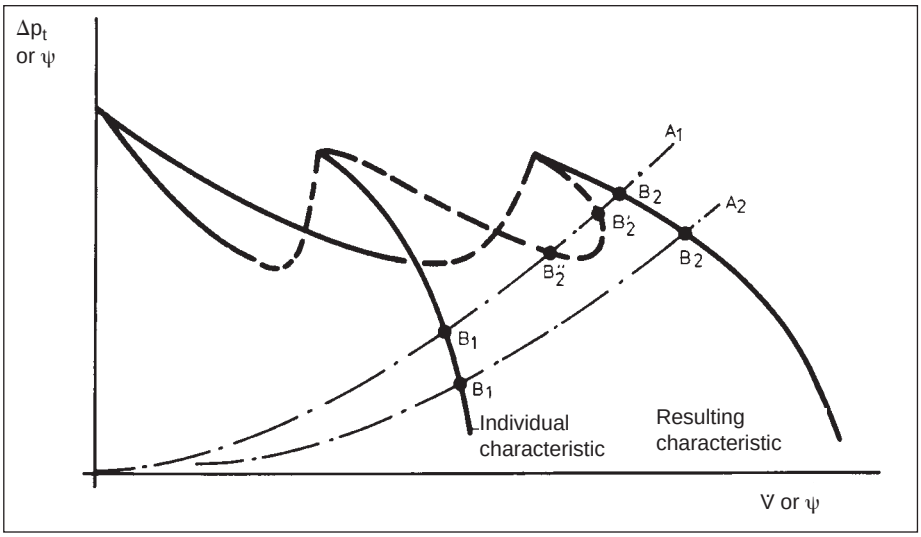

B_1: Operating point with one fan running

B_2: Operating point with both fans running

A_1: System curve too high, instable range

A_2: Properly dimensioned system

10. Overview of old and new units of measurement

	SI unit	Old technical unit
Length	m	m
Time	s	s
Mass	kg	$\frac{kps^2}{m}$
Force	$N = \frac{kgm}{s^2}$	kp
Torque	Nm	kpm
Energy	Nm = J	kpm
Specific gravity	$\left(\frac{N}{m^3}\right)$	$\frac{kp}{m^3}$
Density	$\frac{kg}{m^3}$	$\frac{kps^2}{m^4}$
Velocity	$\frac{m}{s}$	$\frac{m}{s}$
Acceleration	$\frac{m}{s^2}$	$\frac{m}{s^2}$
Pressure	$\frac{N}{m^2}$ = Pa	$\frac{kp}{m^2}$
Frequency	s^{-1} = Hz	s^{-1} = Hz
Flywheel effect*	Nm^2	kpm^2
Moment of inertia*	kgm^2	——
Power	$\frac{Nm}{s}$ = W	$\frac{kpm}{s}$, PS

Conversion / Relationships

a) Force: 1 kp ≙ 9,81 N = 9,81 $\frac{kgm}{s^2}$;
1 N ≙ 0,102 kp

b) Pressure: 1 mm WS ≙ 1 kp/m² ≙ 9,81 Pa ≙ 0,0981 mbar

1 Pa ≙ 0,102 mm WS ≙ 0,102 kp/m² ≙ 0,01 mbar

1mbar ≙ 100 Pa ≙ 10,2 mm WS ≙ 10,2 kp/m²

1 torr = 1 mm Hg = 1,33322 mbar = 133,32 Pa

* Flywheel effect GD^2 and mass moment of inertia J are related by

$GD^2 = 4\,g \cdot J$ with $g = 9{,}81\frac{m}{s^2}$ J in kgm^2
G in N
D in m