LM3560 Synchronous Boost Flash Driver With Dual 1-A High-Side Current Sources (2-A Total Flash Current)

1 Features

- Dual High-Side Current Sources Allow for Grounded Cathode LED Operation
- Accurate and Programmable LED Current from 31.25 mA to 2 A
- Independent LED Current Source Programmability
- Up to 90% Efficient
- Ultra-Small Solution Size: < 26 mm^2
- Four Operating Modes: Torch, Flash, Privacy Indicate, and Message Indicator
- 4-Bit ADC for V_{LED} Monitoring
- LED Thermal Sensing and Current Scale-Back
- Hardware Flash and Torch Enable
- Dual Synchronization Inputs for RF Power Amplifier Pulse Events
- LED and Output Disconnect During Shutdown
- Open and Short LED Detection
- 400-kHz I^2C-Compatible Interface
- Active Low Hardware Reset
- −40°C to +85°C Ambient Temperature Range

2 Applications

- Camera Phone LED Flash
- White LED Biasing

3 Description

The LM3560 is a 2-MHz fixed frequency synchronous boost converter with two 1000-mA constant current drivers for high-current white LEDs. The dual high-side current sources allow for grounded cathode LED operation and can be tied together for providing flash currents at up to 2 A through a single LED. An adaptive regulation method ensures the current for each LED remains in regulation and maximizes efficiency.

The LM3560 is controlled via an I^2C-compatible interface. Features include an internal 4-bit ADC to monitor the LED voltage, independent LED current control, a hardware flash enable allowing a logic input to trigger the flash pulse, dual TX inputs which force the flash pulse into a low-current torch mode allowing for synchronization to RF power amplifier events or other high-current conditions, and an integrated comparator designed to monitor an NTC thermistor and provide an interrupt to the LED current. Additionally, an active high HWEN input provides a hardware shutdown during system software failures.

The device is available in an ultra-small 16-pin DSBGA package. The 2-MHz switching frequency, overvoltage protection and adjustable current limit allow for the use of tiny, low-profile (1-µH and 2.2-µH) inductors and ceramic (10-µF) capacitors.

Device Information(1)

PART NUMBER	PACKAGE	BODY SIZE (NOM)
LM3560	DSBGA (16)	1.96 mm × 1.96 mm

(1) For all available packages, see the orderable addendum at the end of the data sheet.

Typical Application

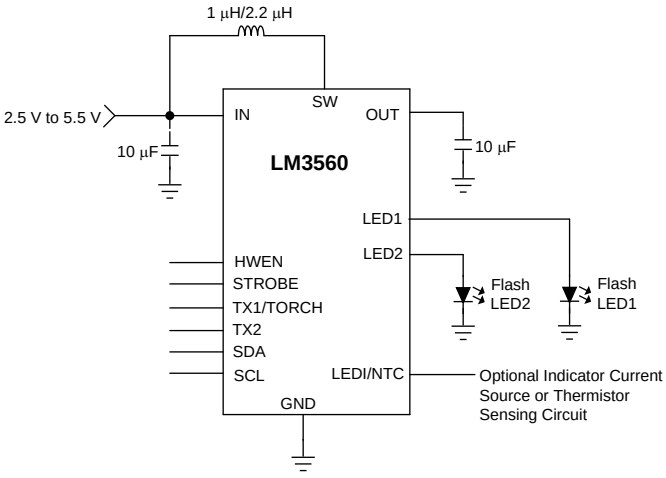

Copyright © 2016, Texas Instruments Incorporated

An IMPORTANT NOTICE at the end of this data sheet addresses availability, warranty, changes, use in safety-critical applications, intellectual property matters and other important disclaimers. PRODUCTION DATA.

Table of Contents

1 Features ... 1
2 Applications ... 1
3 Description ... 1
4 Revision History ... 2
5 Pin Configuration and Functions ... 3
6 Specifications ... 4
6.1 Absolute Maximum Ratings ... 4
6.2 ESD Ratings ... 4
6.3 Recommended Operating Conditions ... 4
6.4 Thermal Information ... 4
6.5 Electrical Characteristics ... 5
6.6 I^2C Timing Specifications (SCL, SDA) ... 7
6.7 Typical Characteristics ... 8
7 Detailed Description ... 12
7.1 Overview ... 12
7.2 Functional Block Diagram ... 13
7.3 Feature Description ... 14
7.4 Device Functional Modes ... 22
7.5 I^2C-Compatible Interface ... 28
7.6 Register Descriptions ... 30
8 Application and Implementation ... 39
8.1 Application Information ... 39
8.2 Typical Application ... 39
9 Power Supply Recommendations ... 43
10 Layout ... 44
10.1 Layout Recommendations ... 44
10.2 Layout Example ... 45
11 Device and Documentation Support ... 46
11.1 Device Support ... 46
11.2 Documentation Support ... 46
11.3 Receiving Notification of Documentation Updates 46
11.4 Community Resources ... 46
11.5 Trademarks ... 46
11.6 Electrostatic Discharge Caution ... 46
11.7 Glossary ... 46
12 Mechanical, Packaging, and Orderable Information ... 46

4 Revision History

NOTE: Page numbers for previous revisions may differ from page numbers in the current version.

Changes from Revision B (August 2013) to Revision C	Page
• Added *Device Information* and *Pin Configuration and Functions* sections, *ESD Ratings* and *Thermal Information* tables, *Feature Description*, *Device Functional Modes*, *Application and Implementation*, *Power Supply Recommendations*, *Layout*, *Device and Documentation Support*, and *Mechanical, Packaging, and Orderable Information* sections	1
• Deleted Maximum Lead Temperature row per new TI data sheet standards	4
• Changed $R_{\theta JA}$ from "50.4°C/W" to "71.4°C/W"; add additional thermal values	4

Copyright © 2011–2016, Texas Instruments Incorporated

5 Pin Configuration and Functions

YZR Package
16-Pin DSBGA
Top View

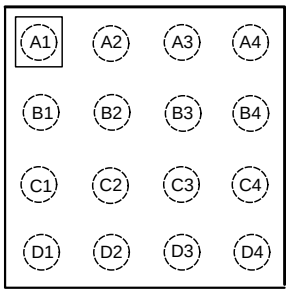

Pin Functions

PIN		TYPE	DESCRIPTION
NO.	NAME		
A1	LED1	Power	High-side current source output for flash LED
A2, B2	OUT	Power	Step-up DC-DC converter output. Connect a 10-µF ceramic capacitor between this pin and GND.
A3, B3	SW	Power	Drain connection for internal NMOS and synchronous PMOS switches.
A4, B4	GND	Ground	Ground
B1	LED2	Output	High-side current source output for flash LED
C1	LEDI/NTC	Power	Configurable as a high-side current source output for indicator LED or comparator input for LED temperature sensing.
C2	TX1/TORCH/ GPIO1	Input/Output	Configurable as a dual-polarity rf power amplifier synchronization input, an interrupt output, or as a general purpose logic I/O. This pin has an internal 300-kΩ pulldown to GND.
C3	STROBE	Input	Active high hardware flash enable. Drive STROBE high to turn on the flash pulse. This pin has an internal 300-kΩ pulldown to GND.
C4	IN	Power	Input voltage connection. Connect IN to the input supply, and bypass to GND with a minimum 10-µF ceramic capacitor.
D1	TX2/INT/GPIO2	Input/Output	Configurable as a dual-polarity power amplifier synchronization Input, an Interrupt Output, or as a general purpose logic I/O. This pin has an internal 300-kΩ pulldown to GND.
D2	SDA	Input/Output	Serial data input/output. High impedance in shutdown or in power down.
D3	SCL	Input	Serial clock input. High impedance in shutdown or in power down.
D4	HWEN	Input	Logic high hardware enable. HWEN is a high-impedance input and is normally connected with an external pullup resistor to a logic high voltage.

Copyright © 2011–2016, Texas Instruments Incorporated

6 Specifications

6.1 Absolute Maximum Ratings

over operating free-air temperature range (unless otherwise noted)(1)

	MIN	MAX	UNIT
V_{IN}, V_{SW}, V_{OUT}	–0.3	6	V
V_{SCL}, V_{SDA}, V_{HWEN}, V_{STROBE}, V_{TX1}, V_{TX2}, V_{LED1}, V_{LED2}, $V_{LEDI/NTC}$	–0.3	to the lesser of (V_{IN} + 0.3 V) with 6 V maximum	V
Continuous power dissipation(2)	Internally limited		
Junction temperature, T_{J-MAX}		150	°C
Storage temperature, T_{stg}	–65	150	°C

(1) Stresses beyond those listed under *Absolute Maximum Ratings* may cause permanent damage to the device. These are stress ratings only, which do not imply functional operation of the device at these or any other conditions beyond those indicated under *Recommended Operating Conditions*. Exposure to absolute-maximum-rated conditions for extended periods may affect device reliability.
(2) Internal thermal shutdown circuitry protects the device from permanent damage. Thermal shutdown engages at T_J = 150°C (typical) and disengages at T_J = 135°C (typical). Thermal shutdown is ensured by design.

6.2 ESD Ratings

			VALUE	UNIT
$V_{(ESD)}$	Electrostatic discharge	Human-body model (HBM), per ANSI/ESDA/JEDEC JS-001(1)	±2000	V

(1) JEDEC document JEP155 states that 500-V HBM allows safe manufacturing with a standard ESD control process.

6.3 Recommended Operating Conditions

over operating free-air temperature range (unless otherwise noted)

	MIN	MAX	UNIT
Input voltage, V_{IN}	2.5	5.5	V
Junction temperature, T_J	–40	125	°C
Ambient temperature, T_A(1)	–40	85	°C

(1) In applications where high power dissipation and/or poor package thermal resistance is present, the maximum ambient temperature may have to be derated. Maximum ambient temperature (T_{A-MAX}) is dependent on the maximum operating junction temperature ($T_{J-MAX-OP}$ = 125°C), the maximum power dissipation of the device in the application (P_{D-MAX}), and the junction-to-ambient thermal resistance of the device package in the application ($R_{\theta JA}$), as given by the following equation: $T_{A-MAX} = T_{J-MAX-OP} – (R_{\theta JA} \times P_{D-MAX})$.

6.4 Thermal Information

THERMAL METRIC(1)		LM3560 YZR (DSBGA) 16 PINS	UNIT
$R_{\theta JA}$	Junction-to-ambient thermal resistance	71.4	°C/W
$R_{\theta JC(top)}$	Junction-to-case (top) thermal resistance	0.4	°C/W
$R_{\theta JB}$	Junction-to-board thermal resistance	12.4	°C/W
ψ_{JT}	Junction-to-top characterization parameter	0.3	°C/W
ψ_{JB}	Junction-to-board characterization parameter	12.6	°C/W

(1) For more information about traditional and new thermal metrics, see *Semiconductor and IC Package Thermal Metrics*.

Copyright © 2011–2016, Texas Instruments Incorporated

6.5 Electrical Characteristics

Unless otherwise specified, V_{IN} = 3.6 V, V_{HWEN} = V_{IN}, T_A = 25°C.(1) (2)

PARAMETER		TEST CONDITIONS		MIN	TYP	MAX	UNIT
CURRENT SOURCE SPECIFICATIONS							
I_{LED}	Current source accuracy	I_{LED1} + I_{LED2} 3 V ≤ V_{IN} ≤ 4.2 V V_{OUT} = 4.5 V	1000-mA flash current setting, per current source	–3.5%	2000	3.5%	mA
			1000-mA flash current setting, per current source –40°C ≤ T_A ≤ 85°C	–5%		5%	
			31.25-mA torch current, per current source		62.5		
			31.25-mA torch current, per current source –40°C ≤ T_A ≤ 85°C	–10%		10%	
V_{OUT} – $V_{LED1/2}$	Current source regulation voltage	I_{LED} = 2 A (I_{LED1} + I_{LED2}), V_{OUT} = 4.5 V			300		mV
V_{OVP}	Output overvoltage protection trip point(3)	ON threshold			5		V
		ON threshold, –40°C ≤ T_A ≤ 85°C		4.925		5.075	
		OFF threshold			4.8		
STEP-UP DC-DC CONVERTER SPECIFICATIONS							
R_{PMOS}	PMOS switch on-resistance	I_{PMOS} = 1 A			80		mΩ
R_{NMOS}	NMOS switch on-resistance	I_{NMOS} = 1 A			65		mΩ
I_{CL}	Switch current limit(4)	CL bits = 00			1.6		A
		CL bits = 00, 3 V ≤ V_{IN} ≤ 4.2 V –40°C ≤ T_A ≤ 85°C		1.44		1.76	
		CL bits = 01			2.3		
		CL bits = 01, 3 V ≤ V_{IN} ≤ 4.2 V –40°C ≤ T_A ≤ 85°C		2.02		2.58	
		CL bits = 10			3		
		CL bits = 10, 3 V ≤ V_{IN} ≤ 4.2 V –40°C ≤ T_A ≤ 85°C		2.64		3.36	
		CL bits = 11			3.6		
		CL bits = 11, 3 V ≤ V_{IN} ≤ 4.2 V –40°C ≤ T_A ≤ 85°C		3.17		4.03	
I_{OUT_SC}	Output short-circuit current limit	V_{OUT} < 2.3 V			300		mA
$I_{LEDI/NTC}$	Indicator current	Message indicator register, bits[2:0] = 111 $V_{LEDI/NTC}$ = 2 V			18		mA
		Message indicator register, bits[2:0] = 111, 3 V ≤ V_{IN} ≤ 4.2 V $V_{LEDI/NTC}$ = 2 V, –40°C ≤ T_A ≤ 85°C		16		20	
V_{TRIP}	Comparator trip threshold	Configuration register 1, bit [4] = 1,			1		V
		Configuration register 1, bit [4] = 1, 3 V ≤ V_{IN} ≤ 4.2 V, –40°C ≤ T_A ≤ 85°C		0.97		1.03	

(1) All voltages are with respect to the potential at the GND pin.
(2) Minimum (MIN) and maximum (MAX) limits are specified by design, test, or statistical analysis. Typical (TYP) numbers represent the most likely norm. Unless otherwise stated, conditions for typical specifications are: V_{IN} = 3.6 V and T_A = 25°C.
(3) The typical curve for overvoltage protection (OVP) is measured in closed loop using *Figure 41* . The OVP value is found by forcing an open circuit in the LED1 and LED2 path and recording the peak value of V_{OUT}. The value given in *Electrical Characteristics* is found in an open loop configuration by ramping the voltage at OUT until the OVP comparator trips. The closed loop data can appear higher due to the stored energy in the inductor being dumped into the output capacitor after the OVP comparator trips. Worst case is an open circuit condition where the output voltage can continue to rise after the OVP comparator trips by approximately I_{IN} × sqrt(L/C_{OUT}).
(4) The typical curve for current limit is measured in closed loop using *Figure 41*, and increasing I_{OUT} until the peak inductor current stops increasing. The value given in *Electrical Characteristics* is measured open loop and is found by forcing current into SW until the current limit comparator threshold is reached. Closed loop data appears higher due to the delay between the comparator trip point and the NFET turning off. This delay allows the closed loop inductor current to ramp higher after the trip point by approximately 20 ns × V_{IN}/L.

Copyright © 2011–2016, Texas Instruments Incorporated

Electrical Characteristics (continued)

Unless otherwise specified, V_{IN} = 3.6 V, V_{HWEN} = V_{IN}, T_A = 25°C.(1) (2)

PARAMETER		TEST CONDITIONS	MIN	TYP	MAX	UNIT
f_{SW}	Switching frequency			2		MHz
		3 V ≤ V_{IN} ≤ 4.2 V, –40°C ≤ T_A ≤ 85°C	1.8		2.2	
$t_{TIMEOUT}$	Timeout duration(5)(6)	3 V ≤ V_{IN} ≤ 4.2 V	–10%		10%	ms
I_Q	Quiescent supply current	Device not switching, V_{OUT} = 3 V		900		µA
		Device switching, V_{OUT} = 4.5 V		1.97		mA
		Indicate mode, message indicator register bits [2:0] = 111		590		µA
I_{SHDN}	Shutdown supply current	3 V ≤ V_{IN} ≤ 4.2 V		0.02		µA
		3 V ≤ V_{IN} ≤ 4.2 V, –40°C ≤ T_A ≤ 85°C			1.25	
I_{STBY}	Standby supply current			1.25		µA
		3 V ≤ V_{IN} ≤ 4.2 V, –40°C ≤ T_A ≤ 85°C			2	
V_{IN_TH}	VIN monitor threshold	V_{IN} monitor register = 0x01		2.9		V
		V_{IN} monitor register = 0x01, –40°C ≤ T_A ≤ 85°C	2.85		2.95	
$V_{IN_FLASH_TH}$	VIN flash monitor threshold	V_{IN} monitor register = 0x08		2.9		V
		V_{IN} monitor register = 0x08, –40°C ≤ T_A ≤ 85°C	2.85		2.95	
t_{TX}	Flash-to-torch LED current settling time	TX_ Low to high I_{LED1} + I_{LED2} = 2 A to 187.5 mA		2		µs
	Torch-to-flash LED current Settling	TX_High to low I_{LED1} + I_{LED2} = 187.5 mA to 2 mA		160		
t_D	Time from when I_{LED} hits target until V_{LED} data is available	ADC delay register bit [5] = 1		16		µs
		ADC delay register bit [5] = 0 ADC delay register bits [4:0] = 0000		250		
V_{F_ADC}	ADC threshold	V_{LED} monitor register bits [3:0] = 1111		4.2		V
		V_{LED} monitor register bits [3:0] = 1111 3 V ≤ V_{IN} ≤ 4.2 V, –40°C ≤ T_A ≤ 85°C	4.05		4.35	
HWEN, STROBE, TX1/TORCH/GPIO1, TX2/INT/GPIO2 VOLTAGE SPECIFICATIONS						
V_{IL}	Input logic low	2.7 V ≤ V_{IN} ≤ 4.2 V, –40°C ≤ T_A ≤ 85°C	0		0.4	V
V_{IH}	Input logic high	2.7 V ≤ V_{IN} ≤ 4.2 V, –40°C ≤ T_A ≤ 85°C	1.2		V_{IN}	V
R_{PD}	Internal pulldown resistance on TX1, TX2, STROBE			300		kΩ
I²C-COMPATIBLE VOLTAGE SPECIFICATIONS (SCL, SDA)						
V_{IL}	Input logic low	2.7 V ≤ V_{IN} ≤ 4.2 V, –40°C ≤ T_A ≤ 85°C	0		0.4	V
V_{IH}	Input logic high	2.7 V ≤ V_{IN} ≤ 4.2 V, –40°C ≤ T_A ≤ 85°C	1.3		V_{IN}	V
V_{OL}	Output logic low (SDA)	I_{LOAD} = 3 mA 2.7 V ≤ V_{IN} ≤ 4.2 V, –40°C ≤ T_A ≤ 85°C			0.4	V

(5) Specified by design. Not production tested.
(6) The timeout period is a divided down representation of the 2-MHz clock; thus, the accuracy specification is the same as the switching frequency.

Copyright © 2011–2016, Texas Instruments Incorporated

6.6 I²C Timing Specifications (SCL, SDA)

All minimum and maximum values apply over –40°C ≤ T_A ≤ 85°C and are specified by design (not production tested); see (1)

		MIN	MAX	UNIT
f_{SCL}	SCL (clock frequency)	0	400	kHz
t_{RISE}	Rise time of both SDA and SCL	20 ns + 0.1 × C_{BUS}	300	ns
t_{FALL}	Fall time of both SDA and SCL	20 ns + 0.1 × C_{BUS}	300	ns
t_{LOW}	Low period of SCL clock	1.3		µs
t_{HIGH}	High period of SCL clock	600		ns
$t_{HD;STA}$	Hold time for start (or repeated start) condition	600		ns
$t_{SU:STA}$	Set-up time for a repeated start	600		ns
$t_{HD:DAT}$	Data hold time	0		ns
$t_{SU:DAT}$	Data set-up time	100		ns
$t_{SU:STO}$	Set-up time for stop condition	600		ns
$t_{VD:DAT}$	Data valid time		900	ns
$t_{VD;ACK}$	Data valid acknowledge time		900	ns
t_{BUF}	Bus-free time between a start and stop condition	1.3		µs

(1) Specified by design, not production tested.

Copyright © 2011–2016, Texas Instruments Incorporated

6.7 Typical Characteristics

V_{IN} = 3.6 V, C_{OUT} = 10 µF, C_{IN} = 10 µF, L = 1 µH (TOKO FDSD0312-1R0, R_L = 43 mΩ), T_A = 25°C, $I_{LED} = I_{LED1} + I_{LED2}$, unless otherwise noted.

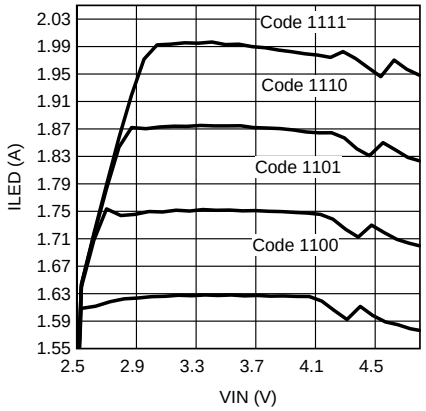

Highest 4 Flash Brightness Codes

Figure 1. I_{LED} vs V_{IN}, $I_{LED1} + I_{LED2}$

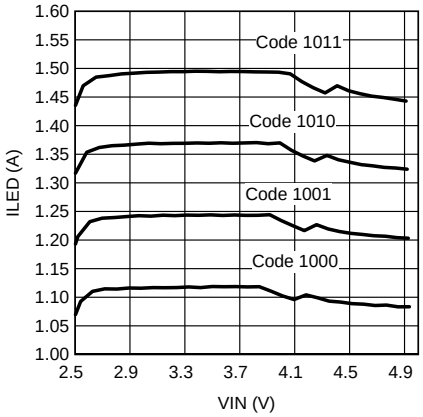

Upper Middle 4 Flash Brightness Codes

Figure 2. I_{LED} vs V_{IN}, $I_{LED1} + I_{LED2}$

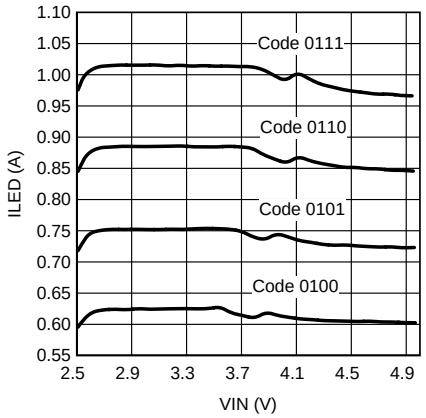

Lower Middle 4 Flash Brightness Codes

Figure 3. I_{LED} vs V_{IN}, $I_{LED1} + I_{LED2}$

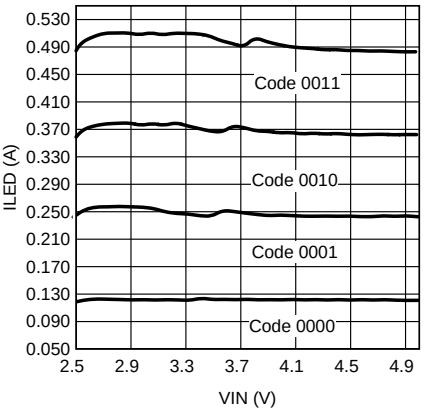

Lowest 4 Flash Brightness Codes

Figure 4. I_{LED} vs V_{IN}, $I_{LED1} + I_{LED2}$

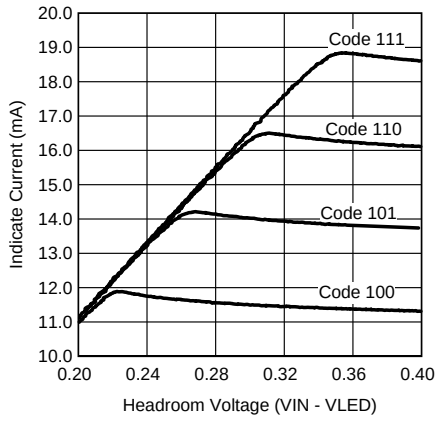

V_{LED} = 2.5 V Indicate Codes 100 - 111

Figure 5. Indicator Current vs Headroom Voltage

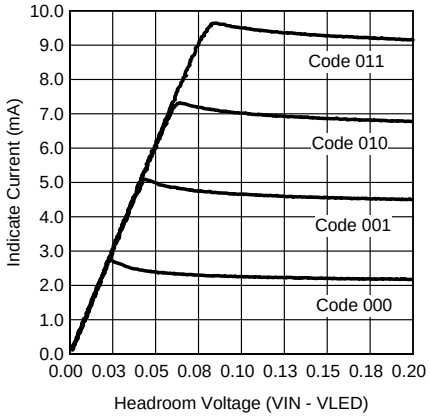

V_{LED} = 2.5 V Indicate Codes 000 - 011

Figure 6. Indicator Currents vs Headroom Voltage

Copyright © 2011–2016, Texas Instruments Incorporated

Typical Characteristics (continued)

V_{IN} = 3.6 V, C_{OUT} = 10 µF, C_{IN} = 10 µF, L = 1 µH (TOKO FDSD0312-1R0, R_L = 43 mΩ), T_A = 25°C, $I_{LED} = I_{LED1} + I_{LED2}$, unless otherwise noted.

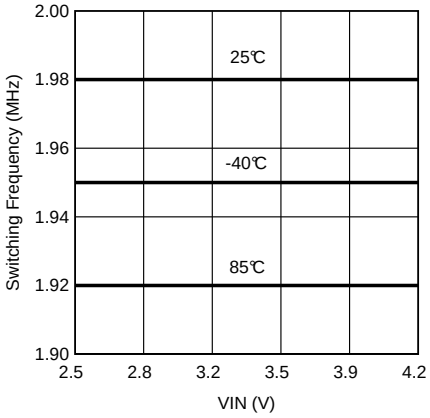

Figure 7. Switching Frequency vs V_{IN}

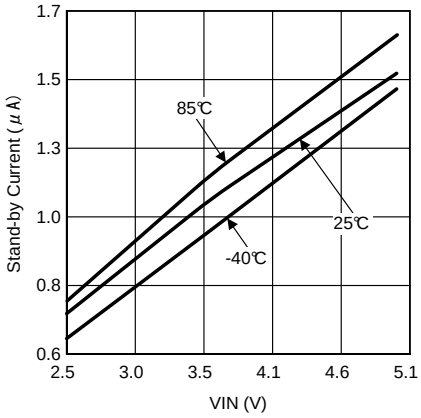

HWEN = V_{IN}

Figure 8. Stand-By Supply Current vs V_{IN}

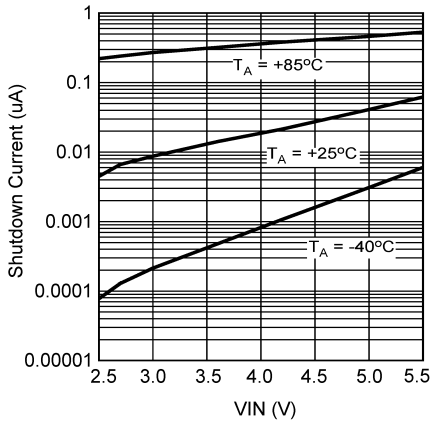

HWEN = GND

Figure 9. Shutdown Supply Current vs V_{IN}

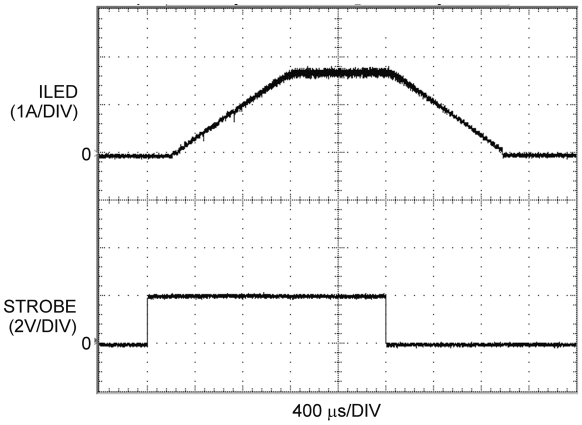

Figure 10. Strobe-to-Flash LED Current Response

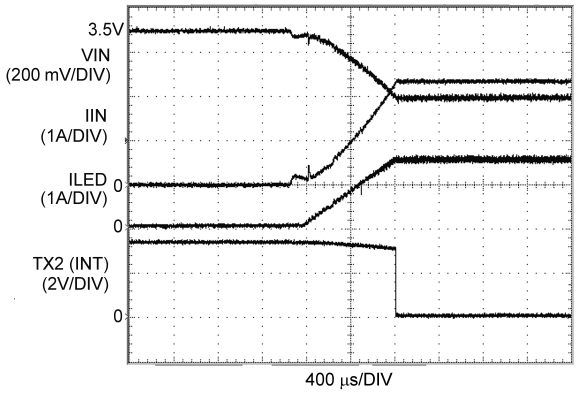

$V_{IN_FLASH_TH}$ = 3.2 V
Circuit Of Figure 27 (Note 1)
TX2 Set For Interrupt Output (INT)

Figure 11. V_{IN} Flash Monitor Operation

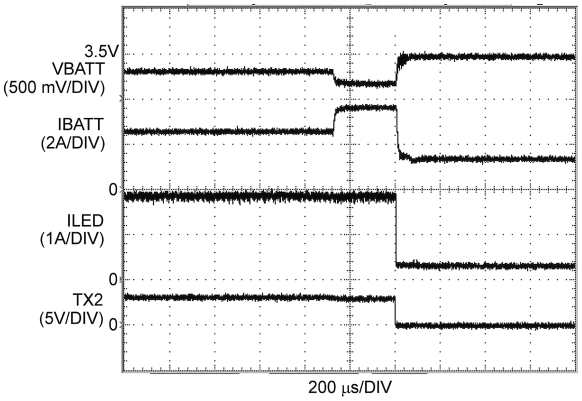

V_{IN_TH} = 3.2 V
Circuit of Figure 27 (Note 2)
TX2 Set For Interrupt Output (INT)
Force Torch Mode

Figure 12. V_{IN} Monitor Operation

Typical Characteristics (continued)

V_{IN} = 3.6 V, C_{OUT} = 10 µF, C_{IN} = 10 µF, L = 1 µH (TOKO FDSD0312-1R0, R_L = 43 mΩ), T_A = 25°C, $I_{LED} = I_{LED1} + I_{LED2}$, unless otherwise noted.

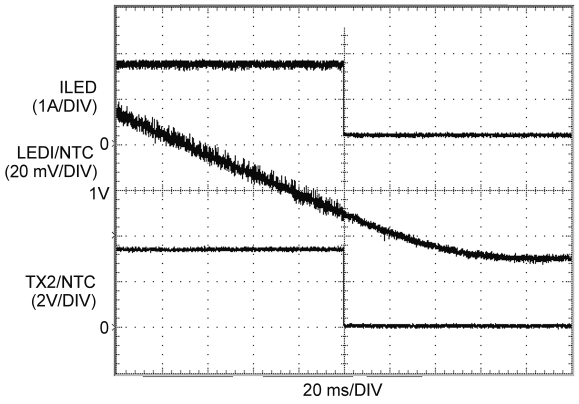

TX2 Set for Interrupt Output (INT)
Circuit of Figure 42
NTC Set to Force Torch Mode

R3 = 1.3 kΩ
R_{NTC} = 10 kΩ at 25°C
Beta = 3380 k

Figure 13. NTC Operation

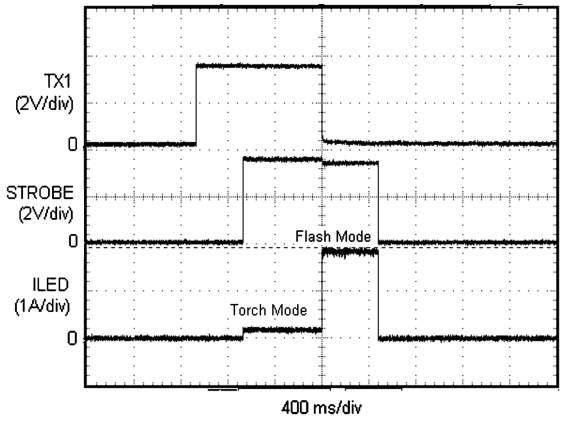

Figure 14. AET Operation

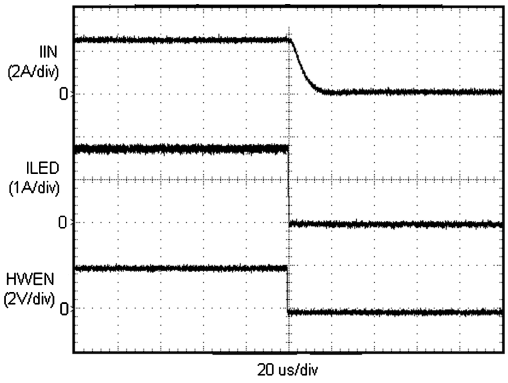

Figure 15. HWEN Operation Device Enabled in Flash Mode

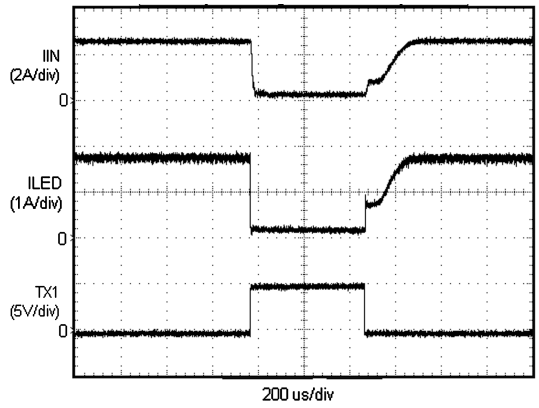

Force Torch

Figure 16. TX1 Interrupt

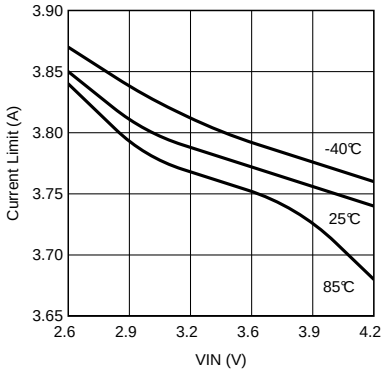

3.6-A Setting See Note 1

Figure 17. Closed Loop Current Limit vs V_{IN}

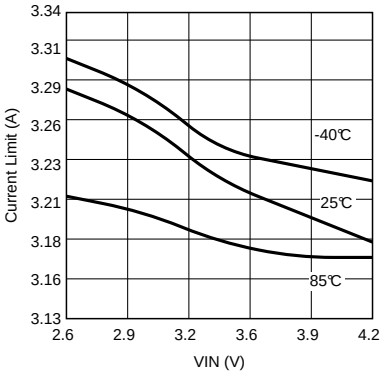

3-A Setting See Note 1

Figure 18. Closed Loop Current Limit vs V_{IN}

Copyright © 2011–2016, Texas Instruments Incorporated

Typical Characteristics (continued)

V_{IN} = 3.6 V, C_{OUT} = 10 µF, C_{IN} = 10 µF, L = 1 µH (TOKO FDSD0312-1R0, R_L = 43 mΩ), T_A = 25°C, $I_{LED} = I_{LED1} + I_{LED2}$, unless otherwise noted.

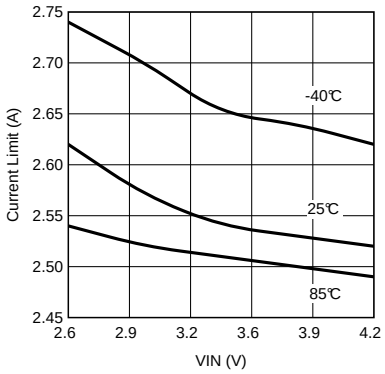

2.3-A Setting See Note 2

Figure 19. Closed Loop Current Limit vs V_{IN}

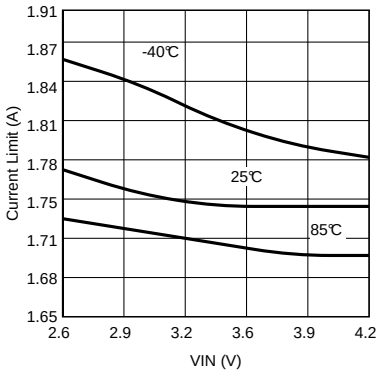

1.6-A Setting See Note 2

Figure 20. Closed Loop Current Limit vs V_{IN}

(1) The typical curve for current limit is measured in closed loop using *Figure 41*, and increasing I_{OUT} until the peak inductor current stops increasing. The value given in *Electrical Characteristics* is measured open loop and is found by forcing current into SW until the current limit comparator threshold is reached. Closed loop data appears higher due to the delay between the comparator trip point and the NFET turning off. This delay allows the closed loop inductor current to ramp higher after the trip point by approximately 20 ns × V_{IN}/L.

(2) The typical curve for overvoltage protection (OVP) is measured in closed loop using *Figure 41* . The OVP value is found by forcing an open circuit in the LED1 and LED2 path and recording the peak value of V_{OUT}. The value given in *Electrical Characteristics* is found in an open loop configuration by ramping the voltage at OUT until the OVP comparator trips. The closed loop data can appear higher due to the stored energy in the inductor being dumped into the output capacitor after the OVP comparator trips. Worst case is an open circuit condition where the output voltage can continue to rise after the OVP comparator trips by approximately I_{IN} × sqrt(L/C_{OUT}).

Copyright © 2011–2016, Texas Instruments Incorporated

7 Detailed Description

7.1 Overview

The LM3560 is a high-power white-LED flash driver capable of delivering up to 2 A of LED current into a single LED or up to 1 A into two parallel LEDs. The device incorporates a 2-MHz constant frequency, a synchronous boost converter, and two high-side current sources to regulate the LED current over the 2.5-V to 5.5-V input voltage range.

During operation when the output voltage is greater than V_{IN} – 150 mV the boost converter switches and maintains at least 300 mV across both current sources (LED1 and LED2). This minimum headroom voltage ensures that the current sources remain in regulation. When the input voltage rises above the LED voltage + current source headroom voltage, the device stops switching and turns the PFET on continuously (pass mode). In pass mode the difference between (V_{IN} – I_{LED} × R_{ON_P}) and the voltage across the LEDs is dropped across the current sources.

Four hardware control pins provide control of the LM3560. These include a hardware flash enable (STROBE), dual flash Interrupt inputs (TX1 and TX2) designed to interrupt the flash pulse during high battery current conditions, and a logic high hardware enable (HWEN) that can be pulled low to rapidly place the device into shutdown. Additional features of the LM3560 include an internal 4-bit ADC for LED voltage monitoring, an internal comparator for LED thermal sensing via an external NTC thermistor, an input voltage monitor that can reduce the flash current during input undervoltage conditions, a low-power message indicator LED current source, and a mode for utilizing the flash LEDs as a privacy indicator.

Control of the LM3560 is done via an I^2C-compatible interface. This includes adjustment of the flash and torch current levels, adjustment of the indicator LED currents, changing the flash timeout duration, changing the switch current limit, and reading back the ADC results. Additionally, there are 8 flag bits that indicate flash current time-out, LED overtemperature, LED failure (LED short or output OVP condition), device thermal shutdown, V_{IN} undervoltage condition, V_{IN} flash monitor undervoltage condition, and the occurrence of a TX1 or TX2 interrupt.

Copyright © 2011–2016, Texas Instruments Incorporated

7.2 Functional Block Diagram

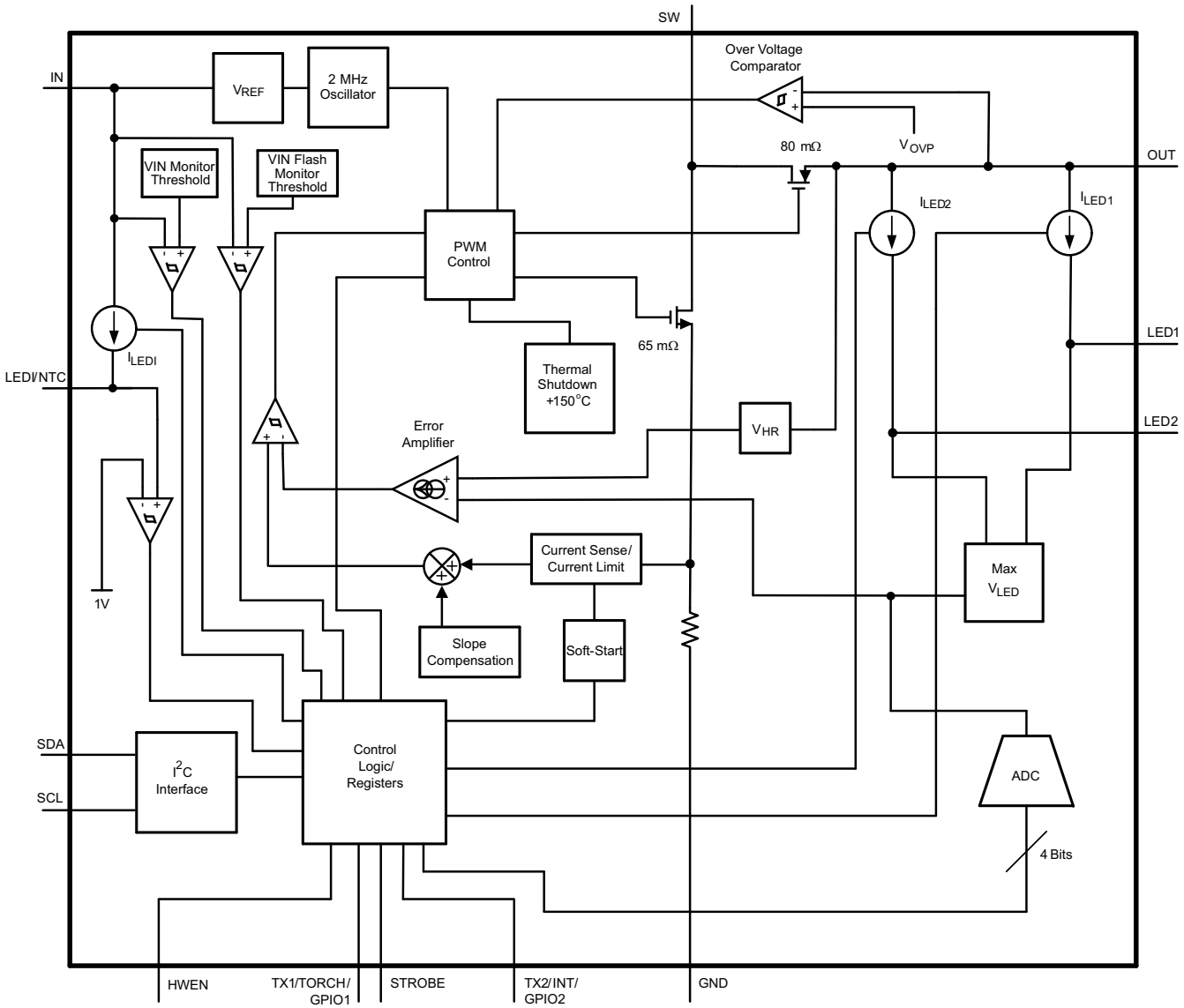

Copyright © 2016, Texas Instruments Incorporated

7.3 Feature Description

7.3.1 Power Amplifier Synchronization (Tx1)

The TX1/TORCH/GPIO1 pin has a triple function. With configuration register 1 bit [7] = 0 (default) TX1/TORCH/GPIO1 is a power amplifier synchronization input (TX1 mode). This mode is designed to reduce the flash LED current when TX1 is driven high (active high polarity) or driven low (active low polarity). When the LM3560 is engaged in a flash event and TX1/TORCH is driven high, the active current sources (LED1 and/or LED2) are forced into torch mode at the programmed torch current setting. If TX1 is then pulled low before the flash pulse terminates, the LED current returns to the previous flash current level. At the end of the flash timeout, whether the TX1/TORCH pin is high or low, the LED current turns off.

The polarity of TX1 can be changed from active high to active low by writing a 0 to bit [5] of Configuration Register 1. With this bit set to 0 the LM3560 is forced into torch mode when TX1/TORCH is pulled low. Figure 21 details the functionality of the TX1 Interrupt.

7.3.1.1 TX1 Shutdown

TX1 also has the capability to force shutdown. Bit [4] of configuration register 2 set to a 1, changes TX1 from a force torch when active to a force shutdown when active. For example, if TX1/TORCH/GPIO1 is configured for TX1 mode with active high polarity, and bit[4] of configuration register 2 is set to 1, then when TX1 is driven high, the active current sources (LED1 and/or LED2) is forced into shutdown. Once the active current sources are forced into shutdown by activating TX1, the current sources can only be re-enabled into flash mode if TX1 is pulled low and the flags register is read back. If only the flags register is read back and TX1 is kept high the device is re-enabled into torch mode and not shutdown. This occurs because the TX1 shutdown feature is an edge-triggered event. With active high polarity the TX1 shutdown requires a rising edge at TX1 in order to force the current source into shutdown. Once shut down, it takes a read back of the flags register and another rising edge at TX1 to force shutdown again. Figure 34 details the different responses of the TX1 shutdown mode.

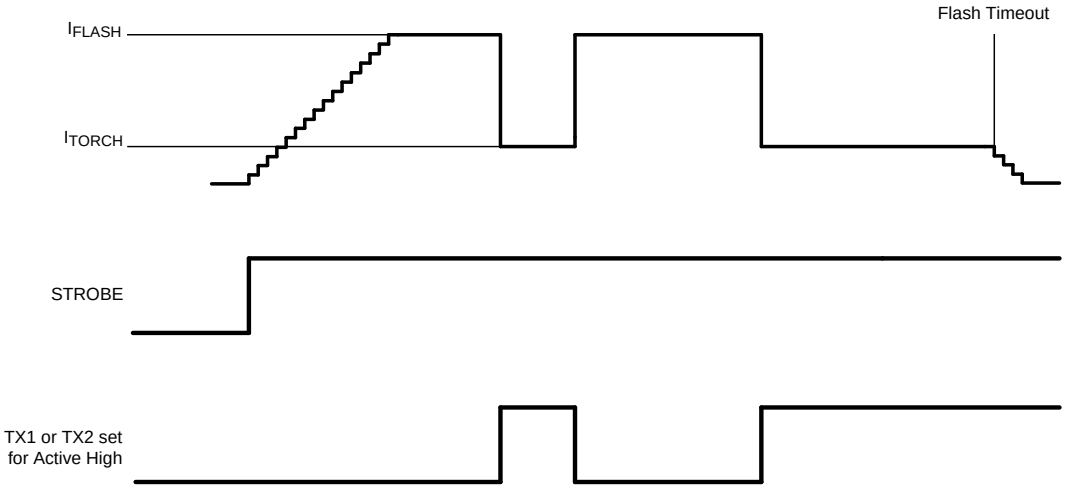

Figure 21. TX1 or TX2 Interrupt (Force Torch) Response

7.3.2 Independent LED Control

Bits [4:3] of the eenable register provide for independent turnon and turnoff of the LED1 or LED2 current sources. Once enabled, the LED current is adjusted by writing to the torch brightness or flash brightness registers depending on whether flash or torch mode is selected. Both the torch brightness and the flash brightness registers provide for independent current programming for the LED currents in either LED1 or LED2. (See Torch Brightness Register Descriptions (Address 0xA0) and *Flash Brightness Register (Address 0xB0)*.)

Copyright © 2011–2016, Texas Instruments Incorporated

Feature Description (continued)

7.3.3 Hardware Torch

With configuration register 1 Bit [7] = 1, TX1/TORCH/GPIO1 is configured as a hardware torch mode enable. In this mode, a high at TX1/TORCH turns on the LED current at the programmed torch current setting. The STROBE input and I^2C-enabled flash takes precedence over torch mode. In hardware torch mode, both LED1 and LED2 current sources turn off after a flash event and configuration register 1 Bit [7] is reset to 0. In this situation, to re-enter torch mode via hardware torch, the hardware torch enable bit (configuration register 1 Bit [7]) must be reset to 1. Figure 22 details the functionality of hardware torch mode.

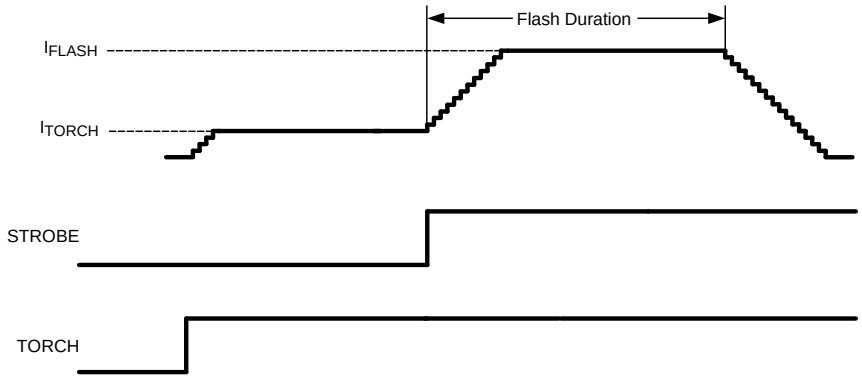

Figure 22. Hardware Torch Mode

7.3.4 Fault Protections

7.3.4.1 Overvoltage Protection

The output voltage is limited to typically 5 V (5.075 V maximum). In situations such as the current source open, the LM3560 raises the output voltage to try to keep the LED current at its target value. When V_{OUT} reaches 5 V, the overvoltage comparator trips and turns off both the internal NFET and PFET. When V_{OUT} falls below 4.8 V (typical), the LM3560 begins switching again.

7.3.4.2 Current Limit

The LM3560 features 4 selectable current limits: 1.6 A, 2.3 A, 3 A, and 3.6 A. These are programmable through the I^2C-compatible interface via bits [6:5] of the flash duration register. When the current limit is reached, the LM3560 stops switching for the remainder of the switching cycle.

Because the current limit is sensed in the NMOS switch there is no mechanism to limit the current when the device operates in pass mode. In situations where there could potentially be large load currents at OUT, and the LM3560 device is operating in pass mode, the load current must be limited to 3 A. In boost mode or pass mode if V_{OUT} falls below approximately 2.3 V, the device stops switching and the PFET operates as a current source, limiting the current to typically 350 mA. This prevents damage to the LM3560 and excessive current draw from the battery during output short-circuit conditions.

7.3.4.3 Flash Timeout

The flash-timeout period sets the amount of time that the flash current is being sourced from current sources LED1 and LED2. Bits [4:0] of the flash duration register set the flash-timeout period. There are 32 different flash-timeout durations in steps of 32 ms giving a flash timeout range of 32 ms to 1024 ms (see Table 15).

7.3.4.4 Indicator LED/Thermistor (LED1/NTC)

The LEDI/NTC pin serves a dual function: either as a programmable LED message indicator driver or as a comparator input for negative temperature coefficient (NTC) thermistors.

Copyright © 2011–2016, Texas Instruments Incorporated

Feature Description (continued)

7.3.4.4.1 Message Indicator Current Source (LEDI/NTC)

LEDI/NTC is configured as a message indicator current source by setting configuration register 1 bit [4] = (0) default. The indicator current source is enabled/disabled via the enable register bit [6] = (1). Bit [7] of the enable register enables the message Indicator in blink mode. If the message indicator is set for blinking mode, the pattern programmed into the indicator register, and indicator blinking register is output on the Indicator current source.

The indicator blinking register controls the following (see Table 6):

1. Number of blank periods (BLANK #). This has 16 settings. t_{BLANK} = t_{ACTIVE} × BLANK# , where t_{ACTIVE} = t_{PERIOD} × PERIOD#
2. Pulse width (t_{PULSE}) has 16 settings between 0 and 480 ms in steps of 32 ms. The pulse width is the duration that the indicator current is at its programmed set point at the end of the ramp-up time.

The indicator register controls the following (see Table 5):

1. Indicator current level (I_{IND}). There are 8 indicator current levels from 2.25 mA to 18 mA in steps of 2.25 mA.
2. Number of periods (PERIOD #). This has 8 steps. A period (t_{PERIOD}) is found by
   t_{PERIOD} = t_R + t_F + 2 x t_{PULSE}. (see Figure 23 for indicator timing).
3. Ramp times (t_R or t_F) for turnon and turnoff of the indicator current source. Four programmable times of 78 ms, 156 ms, 312 ms, and 624 ms are available. The ramp times apply for both ramp-up and ramp-down and are not independently changeable.

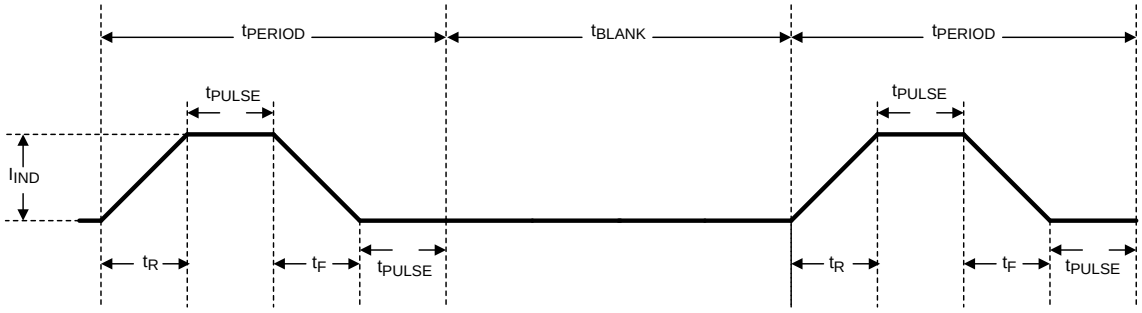

Figure 23. Message Indicator Timing Diagram

7.3.4.4.1.1 Message Indicator Example 1 (Single Pulse With Dead Time):

As an example, to set up the message indicator for a 312-ms ramp-up and ramp-down, 192-ms pulse width, and 1 pulse followed by a 5-s delay. The indicator settings is as follows. t_R = t_F = 312 ms, t_{WIDTH} = 192 ms (t_{PERIOD} = 312 ms × 2 + 192 ms × 2 = 1016 ms). BLANK# setting is: 5s/1016 ms × 1 (PERIOD# = 1). Giving a BLANK# setting of 5. The resulting waveform appears as:

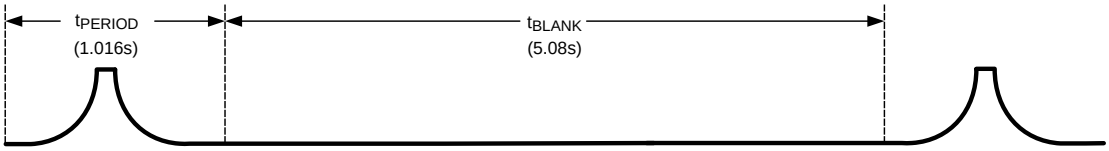

Figure 24. Message Indicator Example 1

7.3.4.4.1.2 Message Indicator Example 2 (Multiple Pulses With Dead Time):

Another example has the same t_R, t_F, t_{PULSE}, and t_{BLANK} times as before, but this time the PERIOD# is set to 3. Now the t_{ACTIVE} time is t_{PERIOD} × 3 = 1016 ms × 3 = 3048 ms. This results in a blank time of t_{BLANK} = t_{ACTIVE} × BLANK# = 3.048 s × 5 = 15.24 s

Copyright © 2011–2016, Texas Instruments Incorporated

Feature Description (continued)

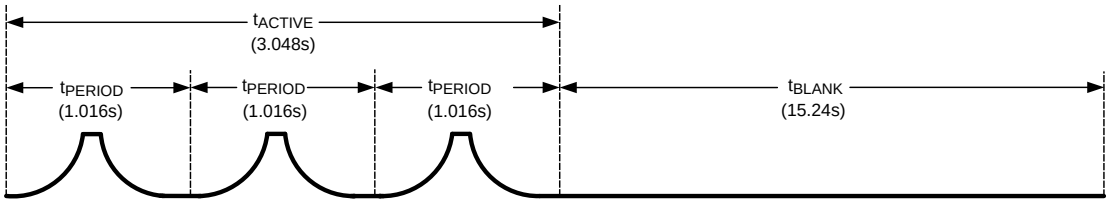

Figure 25. Message Indicator Example 2

7.3.4.4.2 Updating The Message Indicator

The best way to update the message indicator is to disable the message indicator output via the enable register bit [6], then write the new sequence to the indicator register and/or indicator blinking register, and then re-enable the message indicator. Updating the indicator registers while it is active can lead to long delays between pattern changes. This is especially true if the PERIOD#, or BLANK# setting is changed from a high setting to a lower setting.

7.3.5 Input Voltage Monitor

The LM3560 has an internal comparator at IN which monitors the input voltage and can force the LED current into torch mode or into shutdown if V_{IN} falls below the programmable V_{IN} monitor threshold. Bit 0 in the V_{IN} monitor register enables or disables this feature. When enabled, Bits [2:1] program the 4 adjustable thresholds of 2.9 V, 3 V, 3.1 V, and 3.2 V. Bit 3 in configuration register 2 selects whether a V_{IN} monitor event forces torch mode or forces LED1 and/or LED2 into shutdown. See Table 11 for additional information. When the input voltage monitor is active, and V_{IN} falls below the programmed V_{IN} monitor threshold, the LEDs turns off or is forced into the torch current setting. To reset the LED current to its previous level, two things must occur. First, V_{IN} must go above the V_{IN} monitor threshold, and the flags register must be read back. See Figure 26 for the V_{IN} monitor timing waveform.

To avoid noise from falsely triggering the V_{IN} monitor, this mode incorporates a 250 µs de-glitch timer. With the V_{IN} monitor active, V_{IN} must go below the V_{IN} monitor threshold (V_{IN_TH}), and remain below it, for 250 µs before the LEDs are forced into torch mode (or shutdown) and the V_{IN} monitor flag is written.

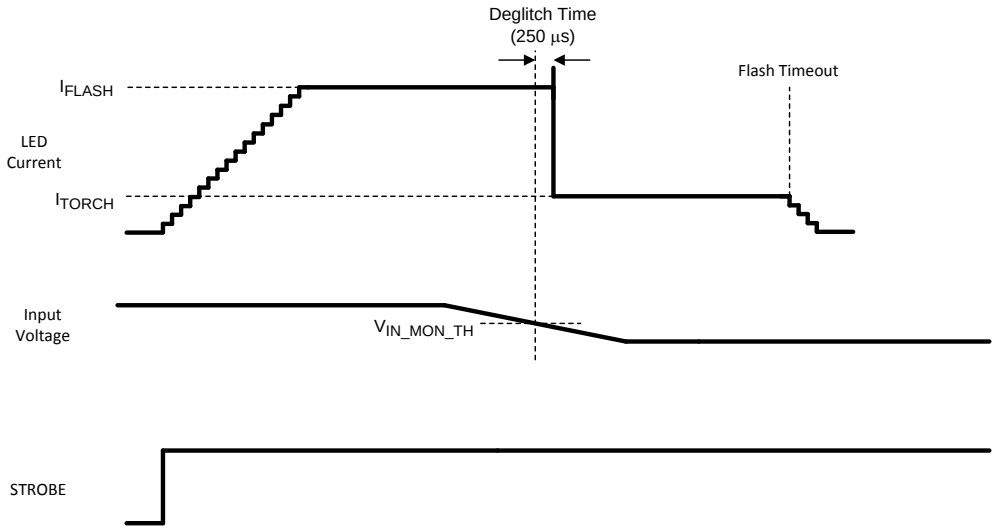

Figure 26. V_{IN} Monitor Waveform

Feature Description (continued)

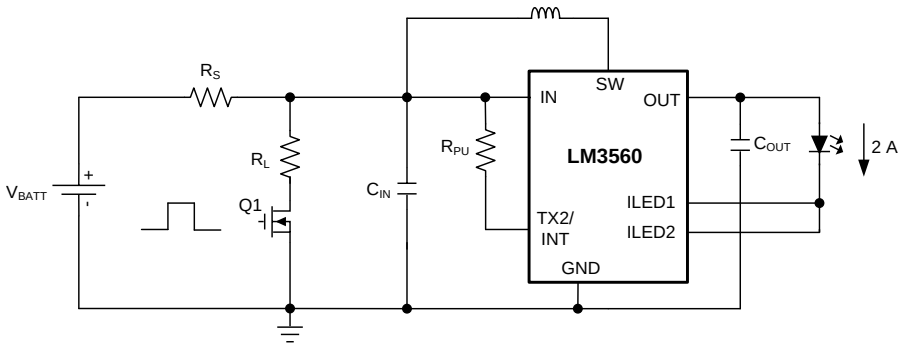

Copyright © 2016, Texas Instruments Incorporated

(1) For the V_{IN} flash monitor test, when the 2-A flash starts up the voltage at IN begins to drop via the rising input current ramp and the source resistance RS As soon as the input voltage crosses the programmed V_{IN} flash monitor threshold the flash current ramp is stopped, and the LM3560 flashes at the reduced current

(2) For the V_{IN} monitor test, with a 2-A flash current the voltage at IN is $V_{BATT} – I_{BATT} \times R_S$. When Q1 turns on the added load causes V_{IN} to drop by the additional current (V_{IN} / RL) which flows through R_S. When V_{IN} drops the programmed VIN monitor threshold is crossed, and the flash current pulse steps to the programmed torch current level causing V_{IN} to step up.

Figure 27. V_{IN} Monitor/V_{IN} Flash Monitor Test Circuit

7.3.5.1 Input Voltage Flash Monitor (Flash Current Rising)

A second comparator at the IN pin is available to monitor the input voltage during the flash current turnon (Input voltage flash monitor). Bit [3] of the V_{IN} monitor register enables/disables this feature. With this bit set to 1, the V_{IN} flash monitor is active, and bits [5:4] of the V_{IN} monitor register program the 4 selectable thresholds of (2.9 V, 3 V, 3.1 V, and 3.2 V). The V_{IN} flash monitor operates as follows: during flash current turnon the current sources transitions through each of the lower flash current levels until the target flash current is reached. With the input voltage flash monitor active, if during the flash current turnon the input voltage falls below the V_{IN} flash monitor threshold, the flash current is stopped at the level that the current ramp had risen to, at the time of the V_{IN} flash monitor event. The V_{IN} flash monitor only operates during the ramping up of the flash LED current.

The V_{IN} flash monitor ignores the first 2 flash codes during the flash current turnon. As a result, if the V_{IN} flash monitor is enabled and V_{IN} were to fall below the V_{IN} flash threshold as the LED current ramps up through either of the first two levels, then the flash pulse would not be halted until code number 3 (168.75 mA per current source).

To avoid noise from falsely triggering the V_{IN} flash monitor, this mode incorporates an 8µs de-glitch timer as well as an internal analog filter at the input of the VIN flash monitor comparator. With the V_{IN} flash monitor active, V_{IN} must go below the V_{IN} flash monitor threshold (V_{IN_FLASH}), and remain below it, for 8 µs before the flash current ramp is halted and the V_{IN} flash monitor flag is written.

7.3.6 Last Flash Register

Once the V_{IN} flash monitor is tripped, the flash code that corresponded to the LED current at which the flash current ramp was halted is written to the last flash register. The last flash register is a read-only register and has the lower 4 bits available to latch the code for LED1 and the upper 4 bits to latch the code for LED2.

For example, suppose that the LM3560 is set up for a single LED with a target flash current of 1250 mA and the V_{IN} flash monitor is enabled with the V_{IN} flash monitor threshold set to 3 V (V_{IN} monitor register bits [5:4] = 0, 1). When the STROBE input is brought high, the LED current begins ramping up through the torch and flash current codes at 32 µs/code. As the input current increases, the input voltage at the IN pin of the LM3560 device begins to fall due to the source impedance of the battery. By the time the LED current has reached 1000 mA (code 0x77 or 500 mA per current source), V_{IN} falls below 3 V. The V_{IN} flash monitor then stops the flash current ramp, and the LM3560 continues to proceed with the flash pulse, but at 1000 mA instead of 1250 mA. Figure 28 details this sequence.

Copyright © 2011–2016, Texas Instruments Incorporated

Feature Description (continued)

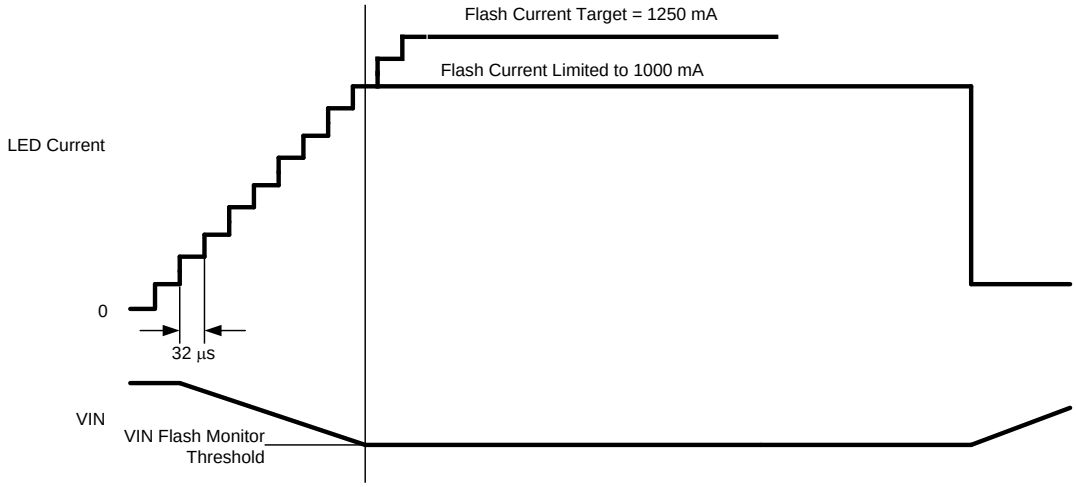

Figure 28. V_{IN} Flash Monitor Example

7.3.7 LED Voltage Monitor

The LM3560 includes a 4-bit ADC which monitors the LED forward voltage (V_{LED}) and stores the digitized value in bits [3:0] of the V_{LED} monitor register. The highest voltage of V_{LED1} or V_{LED2} is automatically sensed and that becomes the sample point for the ADC. Bit 5, the ADC shutdown bit, enables/disables the ADC with the default state set to enable (bit [5] = 0).

7.3.8 ADC Delay

The ADC delay register provides for a programmable delay from 250 µs to 8 ms in steps of 250 µs. This delay is the delay from when the EOC bit goes low to when the V_{LED} monitor samples the LED voltage. In automatic mode the EOC bit goes low when the flash LED current hits its target. In Manual mode the EOC bit goes low at the end of a read back of the V_{LED} monitor register (or when the manual mode bit (bit 4) is re-written with a 1).

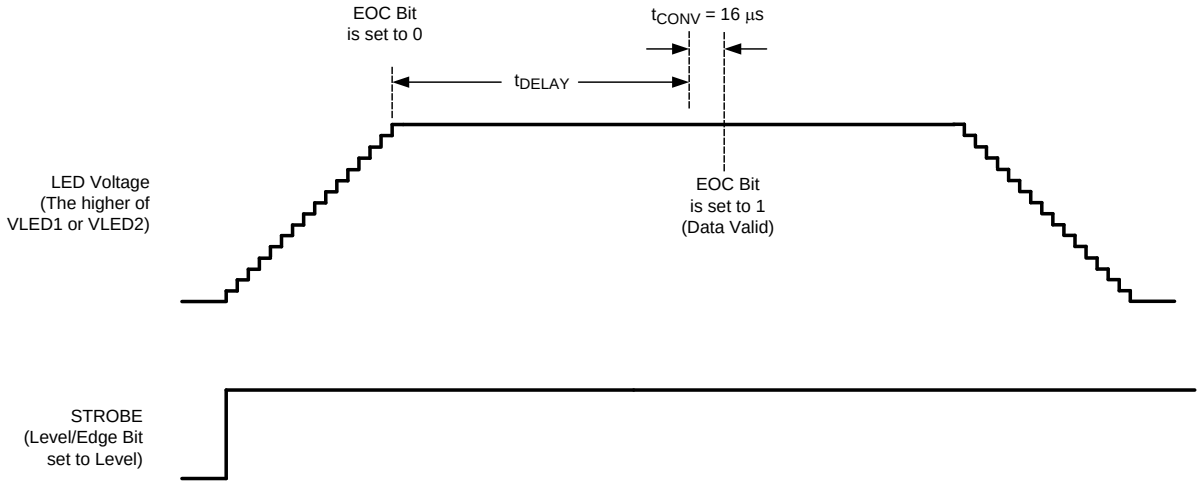

Figure 29. V_{LED} Monitor Automatic Mode

Copyright © 2011–2016, Texas Instruments Incorporated

Feature Description (continued)

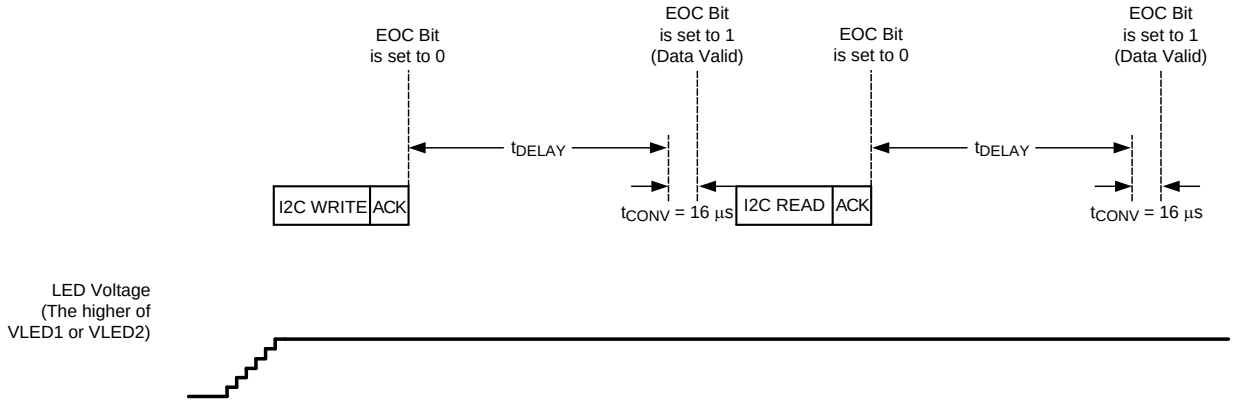

Figure 30. V_{LED} Monitor Manual Mode

7.3.9 Flags Register and Fault Indicators

Eight fault flags are available in the LM3560. These include a flash timeout, a thermal shutdown, an LED failure flag (LED shorted or output going OVP indicating LED open), an LED thermal flag (NTC threshold tripping), a V_{IN} monitor flag, and a V_{IN} flash monitor flag. Additionally, two LED interrupt flag bits (TX1 interrupt and TX2 interrupt) are set when the corresponding interrupt is activated. Reading back a 1 indicates the flagged event has happened. A read of the flags register resets these bits.

7.3.9.1 Flash Timeout

The timeout (TO) flag, (bit [0] of the flags register) reads back a 1 if the LM3560 is active in flash mode and the timeout period expires before the flash pulse is terminated. The flash pulse can be terminated before the timeout period expires by pulling the STROBE pin low (with enable register bit [5] = 0), or by writing a (0,0) to bit [1:0] of the enable register. The TO flag is reset to 0 by pulling HWEN low, removing power to the LM3560, or reading the flags register.

7.3.9.2 Thermal Shutdown

The LM3560 features a thermal shutdown threshold of typically 150°C. When the devices die temperature reaches 150°C the active current sources (LED1 and/or LED2) shuts down, and the TSD flag in the flags register is written high. The device cannot be started up again until the flags register is read back. Once the flags register is read back either current source can be re-enabled into privacy, torch, or flash mode. The thermal shutdown (TSD) circuitry has an internal 250 µs de-glitch timer which helps prevent unwanted noise from falsely triggering a TSD event. However, when the LM3560 is in boost mode at higher flash currents, the de-glitch timer can get reset by the high currents in the GND of the LM3560 device. As a result the internal de-glitch timer of the thermal shutdown can be reset before the TSD event can get latched in. This prevents a TSD event from being triggered until the flash pulse of the LM3560 reaches the end of the flash duration, when the noisy currents have dropped to a lower level. However, once the noise is lower, and a TSD event is triggered, the next flash pulse is not allowed until the flags register is read back. In pass mode the boost switcher is off and the lower noise environment allows the devices TSD circuitry to shut down immediately when the die temperature reaches 150°C.

7.3.9.3 LED Fault

The LED fault flag (bit 2 of the flags register) reads back a 1 if the part is active in flash or torch mode and either LED1 or LED2 experience an open or short condition. An LED open condition is signaled if the OVP threshold is crossed at the OUT pin while the device is in flash, torch, or privacy mode. An LED short condition is signaled if the voltage at LED1 or LED2 goes below 500 mV while the device is in flash, torch, or privacy mode. In an LED open condition there is a 2-µs deglitch time from when the output voltage crosses the OVP threshold to when the LED fault flag is triggered. In an LED short condition there is a 250-µs deglitch time from when the LED voltage falls below 500 mV until the LED fault flag is set. The LED fault flag can only be reset to 0 by pulling HWEN low, cycling power, or by removing the fault condition and reading back the flags register.

Copyright © 2011–2016, Texas Instruments Incorporated

Feature Description (continued)

7.3.9.4 TX1 and TX2 Interrupt Flags

The TX1 and TX2 interrupt flags (bits [3] and [4]) indicate an interrupt event has occurred on the respective TX inputs. Bit 3 reads back a 1 if TX1 is in TX mode and there has been a TX1 event since the last read of the flags register. Bit 4 reads back a 1 if TX2 is in TX mode and there has been a TX2 event since the last read of the flags register. A read of the flags register automatically resets these bits. A TX event on TX1 or TX2, can be a high-to-low transition or a low-to-high transition depending on the setting of the TX1 and TX2 polarity bits (see *Configuration Register 1 (Address 0xE0)* bits [6:5]).

7.3.9.5 LED Thermal Fault (NTC Flag)

The NTC flag (bit [5] of the flags register) reads back a 1 if the LM3560 is active in flash or torch mode, the device is in NTC mode, and the voltage at LEDI/NTC has fallen below V_{TRIP} (1V typical). When this has happened, and the LM3560 has been forced into torch mode or LED shutdown (depending on the state of configuration register 2 bit [1], the flags register must be read, and $V_{LEDI/NTC}$ must go above 1 V in order to place the device back in normal operation. (see *NTC Mode* for more details).

7.3.9.6 V_{IN} Flash Monitor Fault

The V_{IN} flash monitor flag (bit [6] of the flags register) reads back a 1 if the V_{IN} flash monitor is enabled and V_{IN} falls below the programmed V_{IN} flash monitor threshold. This flag must be read back in order to resume normal operation after the LED current has been forced to the lower flash current setting.

7.3.9.7 V_{IN} Monitor Fault

The V_{IN} monitor flag (bit [7] of the flag register) reads back a 1 when the VIN monitor is enabled and V_{IN} falls below the programmed V_{IN} monitor threshold. This flag must be read back and V_{IN} must go above the V_{IN} monitor threshold in order to resume normal operation after the LED current has been forced to torch mode or turned off due to a V_{IN} monitor event.

Copyright © 2011–2016, Texas Instruments Incorporated

7.4 Device Functional Modes

7.4.1 Start-Up (Enabling the Device)

Turnon of the LM3560 is done through bits [1:0] of the enable register. These bits enable the device in torch mode, flash mode, or privacy Indicate mode. Additionally, bit 6 of the enable register enables the message indicator at the LEDI/NTC pin. On start-up, when V_{OUT} is less than V_{IN}, the internal synchronous PFET turns on as a current source and delivers 350 mA to the output capacitor. During this time both current sources (LED1, and LED2) are off. When the voltage across the output capacitor reaches 2.2 V the current sources can turn on. At turnon the current sources step through each FLASH and TORCH level until their target LED current is reached (32 µs/step). This gives the device a controlled turnon and limits inrush current from the V_{IN} supply.

7.4.2 Pass Mode

On turnon, when the output voltage charges up to V_{IN} – 150 mV, the LM3560 operates in either pass mode or boost mode. If the voltage difference between V_{OUT} and V_{LED} is less then 300 mV, the device operates in boost mode. If the difference between V_{OUT} and V_{LED} is greater then 300 mV, the device operates in pass mode. In pass mode the boost converter stops switching and the synchronous PFET turns fully on bringing V_{OUT} up to $V_{IN} – I_{IN} \times R_{PMOS}$ where R_{PMOS} = 80 mΩ. In pass mode the inductor current is not limited by the peak current limit. In this situation the output current must be limited to 3 A.

7.4.3 Flash Mode

In flash mode the LED current sources (LED1 and LED2) each provide 16 different current levels from typically 62.5 mA (total) to 2 A (total) in steps of 62.5 mA. The flash currents are adjusted via the flash brightness register. Flash mode is activated by writing a (1, 1) to bits [1:0] of the enable register or by enabling the hardware flash input (STROBE) via bit [2] of Configuration Register 1, and then pulling the STROBE pin high (high polarity). Once the flash sequence is activated the active current sources (LED1 and/or LED2) ramps up to their programmed flash current level by stepping through all torch and flash levels (32 µs/step) until the programmed current is reached.

Bit [5] of the enable register (STROBE level/edge bit) determines how the flash pulse terminates after STROBE goes high. With the level/edge bit = 1, the flash current only terminates when it reaches the end of the flash timeout period. With the level/edge bit = 0, flash mode can be terminated by pulling STROBE low, programming bits [1:0] of the enable register with (0,0), or by allowing the flash timeout period to elapse. If the level/edge bit = 0 and STROBE is toggled before the end of the flash timeout period, the timeout period resets. Figure 31 and Figure 32 detail the flash pulse termination for the different level/edge bit settings.

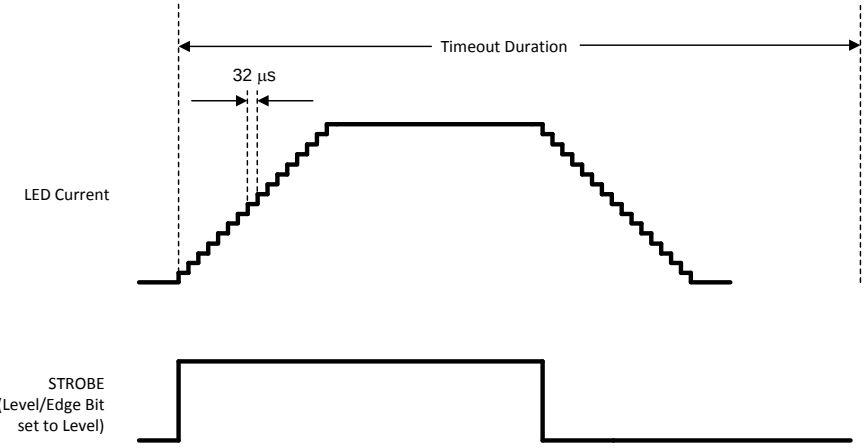

Figure 31. LED Current for Strobe (Level Triggered, Enable Register Bit 5 = 0)

Copyright © 2011–2016, Texas Instruments Incorporated

Device Functional Modes (continued)

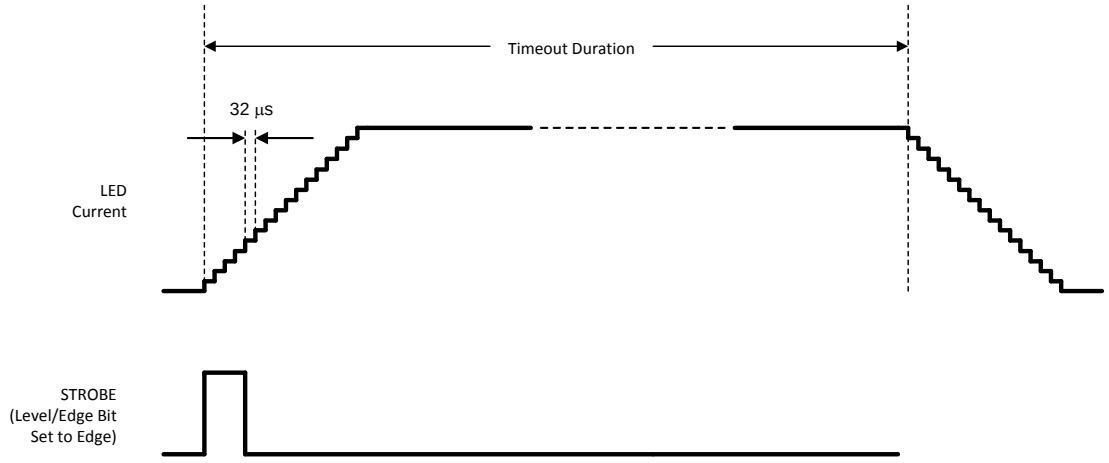

Figure 32. LED Current for Strobe (Edge Triggered, Enable Register Bit 5 = 1)

After the flash pulse terminates, either by a flash timeout, pulling STROBE low, or disabling it via the I^2C-compatible interface, LED1 and LED2 turn completely off. This happens even when torch is enabled via the I^2C-compatible interface and the flash pulse is turned on by toggling STROBE. After a flash event ends, bits [1:0] of the enable register are automatically reset with (0, 0). The exception occurs when the privacy terminate bit is low (bit [3]) in the privacy register. In this case, the specific current source that is enabled for privacy mode turns back on after the flash pulse.

7.4.4 Torch Mode

In torch mode the current sources LED1 and LED2 each provide 8 different current levels (*Torch Brightness Register Descriptions (Address 0xA0)*). Torch mode is activated by setting enable register bits [1:0] to (1, 0). Once torch mode is enabled, the current sources ramps up to the programmed torch current level by stepping through all of the torch currents at (32 µs/step) until the programmed torch current level is reached.

7.4.5 Privacy Indicator Mode

The current sources (LED1 and/or LED2) can also be used as a privacy indicator before and after flash mode. Privacy indicate mode is enabled by setting the enable register bit [1:0] to (0, 1). Privacy mode is configured via the privacy register. This allows the selection of which current source to use as the privacy indicator (either LED1, LED2, or both), whether or not the privacy indicate mode turns off at the end of the flash pulse, the 3 selectable privacy blink periods (t_{BLINK}), and the 8 duty cycle settings for the privacy indicator average current.

The intensity of the LEDs in privacy indicate mode is set by PWM controlling either the lowest torch current level (31.25 mA per current source) or the highest torch current level (250 mA per current source). Bit [2] in the enable register selects between these two levels. Bits [2:0] in the privacy register select the 8 different duty cycles of 10%, 20%, 30%, 40%, 50%, 60%, 70%, and 80%. This enables privacy mode to have a PWM-controlled torch current with a wide number of values (see Table 1). The privacy blink options (t_{BLINK}) are set via bit [7:6] of the privacy register. Selectable options are 128 ms, 256 ms, 512 ms, or always on. The blink pulse period is set to 2 × t_{BLINK}. Figure 33 details the timing for the privacy indicate mode timing on ILED1 or ILED2.

Copyright © 2011–2016, Texas Instruments Incorporated

Device Functional Modes (continued)

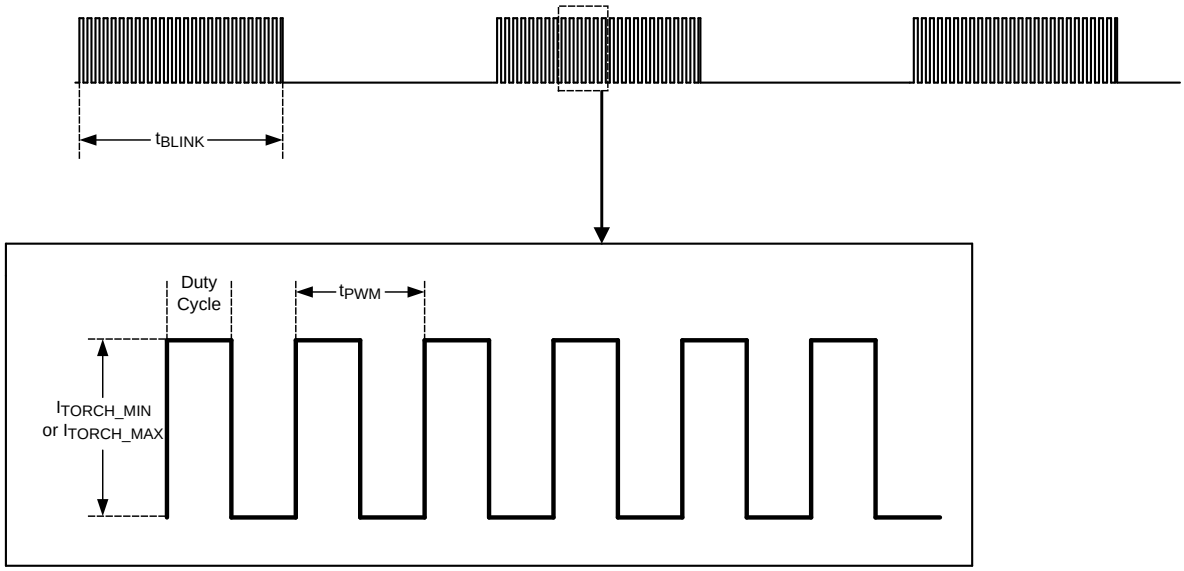

- t_{BLINK} set via bits [7:6] of Privacy Register
- Duty cycle set via bits [2:0] of Privacy Register
- t_{PWM} set via bits[2:0] of the Privacy PWM Register

Figure 33. Privacy Indicate Timing

Table 1. Privacy Indicate (With PWM Torch) Possible Current Settings (1)

PRIVACY CURRENT SETTING (ENABLE REGISTER BIT [2]) 0 = 31.2 5mA peak 1 = 250 mA peak	PRIVACY INDICATE DUTY CYCLE PRIVACY REGISTER BITS [2:0] see (Table 4)	ILED1 or ILED2 (SINGLE LED)
0	000	3.125 mA
0	001	6.25 mA
0	010	9.375 mA
0	011	12.5 mA
0	100	15.625 mA
0	101	18.75 mA
0	110	21.875 mA
0	111	25 mA
1	000	25 mA
1	001	50 mA
1	010	75 mA
1	011	100 mA
1	100	125 mA
1	101	150 mA
1	110	175 mA
1	111	200 mA

(1) The listed current is with 1 current source active

Copyright © 2011–2016, Texas Instruments Incorporated

7.4.6 GPIO1 Mode

With bit [0] of the GPIO register set to 1, the TX1/TORCH/GPIO1 pin is configured as a logic I/O. In this mode the TX1/TORCH/GPIO1 pin is readable and writable as a logic input/output via bits [2:1] of the GPIO register (see GPIO Register (Address 0x20) for programming the GPIO1 output).

7.4.7 TX2/INT/GPIO2

The TX2/INT/GPIO2 pin has a triple function. In TX2 mode (default) the TX2/INT/GPIO2 pin is an active high flash interrupt. With GPIO register bit [3] = 1 the TX2/INT/GPIO2 pin is configured as general purpose logic I/O. With GPIO register bit [6] = 1, and with the TX2/INT/GPIO2 pin configured as a GPIO2 output, the TX2/INT/GPIO2 pin is an interrupt output.

7.4.8 TX2 Mode

In TX2 mode, when configuration register 1, bit [6] = 0, TX2 is an active low flash interrupt. Under this condition when the LM3560 is engaged in a flash event and TX2 is pulled low, the active current source (LED1 and/or LED2) are forced into torch mode. In TX2 mode with configuration register 1, bit [6] = 1, TX2 is configured for active high polarity. Under this condition, when the LM3560 is engaged in a flash event and TX2 is driven high, the active current source (LED1 and/or LED2) are forced into torch mode. During a TX2 interrupt event, if the TX2 input is disengaged, the LED current returns to the previous flash current level. Figure 21 details the functionality of the TX2 interrupt.

7.4.8.1 TX2 Shutdown

TX2 also has the capability to force shutdown. When bit [0] of configuration register 2 is set to a 1, TX2 forces shutdown when active. For example, if TX2 is configured for TX2 mode with active high polarity, and bit [0] of Configuration Register 2 is set to 1 then when TX2 is driven high, the active current sources (LED1 and/or LED2) is forced into shutdown. Once the active current sources are forced into shutdown by activating TX2, the current sources can only be re-enabled in flash mode if TX2 is pulled low and the flags register is read back. If only the flags register is read back and TX2 is kept high, the device is re-enabled into torch mode and not shut down. This occurs because the TX2 shutdown feature is an edge-triggered event. With active high polarity the TX2 shutdown requires a rising edge at TX2 in order to force the current sources into shutdown. Once shut down, it takes a read back of the flags register and another rising edge at TX2 to force shutdown again. Figure 34 details TX2 shutdown mode.

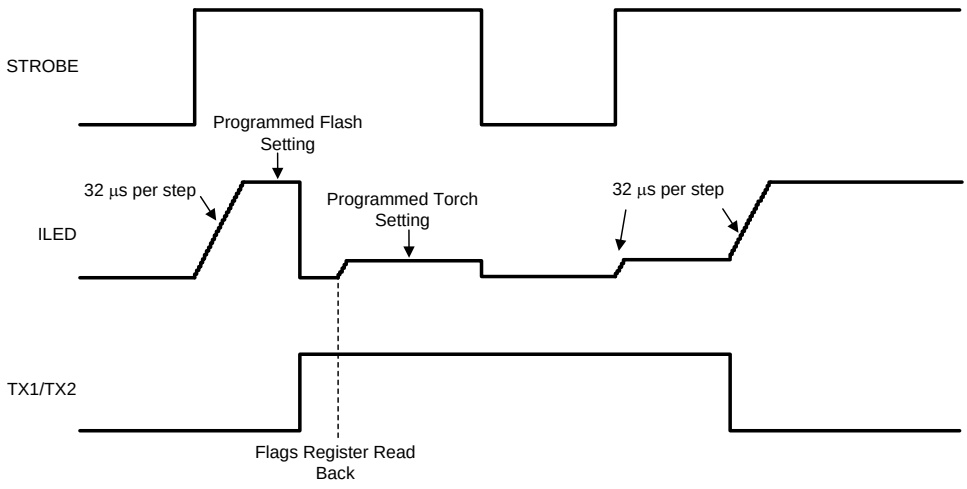

Figure 34. TX1 or TX2 (Force Shutdown) Response

7.4.9 GPIO2 Mode

With bit [3] of the GPIO fegister set to 1, the TX2/INT/GPIO2 pin is configured as a logic I/O. In this mode the TX2/INT/GPIO2 pin is readable and writable as a logic input/output via bits [5:4] of the GPIO register. See Table 8 for programming the GPIO2 output.

Copyright © 2011–2016, Texas Instruments Incorporated

7.4.10 Interrupt Output (INT Mode)

The TX2/INT/GPIO2 pin can be reconfigured as an active low interrupt output by setting bit [6] in the GPIO register to 1 and configuring TX2/INT/GPIO2 as a GPIO2 output (bits [4:3] of GPIO register = 11). In this mode, TX2/INT/GPIO2 pulls low when any of these conditions exist:

1. The LM3560 is configured for NTC mode (configuration register 1 bit [4] = 1), and the voltage at LEDI/NTC has fallen below V_{TRIP} (1 V typical).
2. The LM3560 is configured for V_{IN} monitor mode (V_{IN} monitor register bit [0] = 1), and V_{IN} falls below the programmed V_{IN} monitor threshold.
3. The LM3560 is configured for V_{IN} flash monitor mode (V_{IN} monitor register bit [3] = 1), and V_{IN} falls below the programmed V_{IN} flash monitor threshold.

Once INT is pulled low due to any of the above conditions having been met, INT only goes high again if any of the conditions are no longer true and the flags register is read.

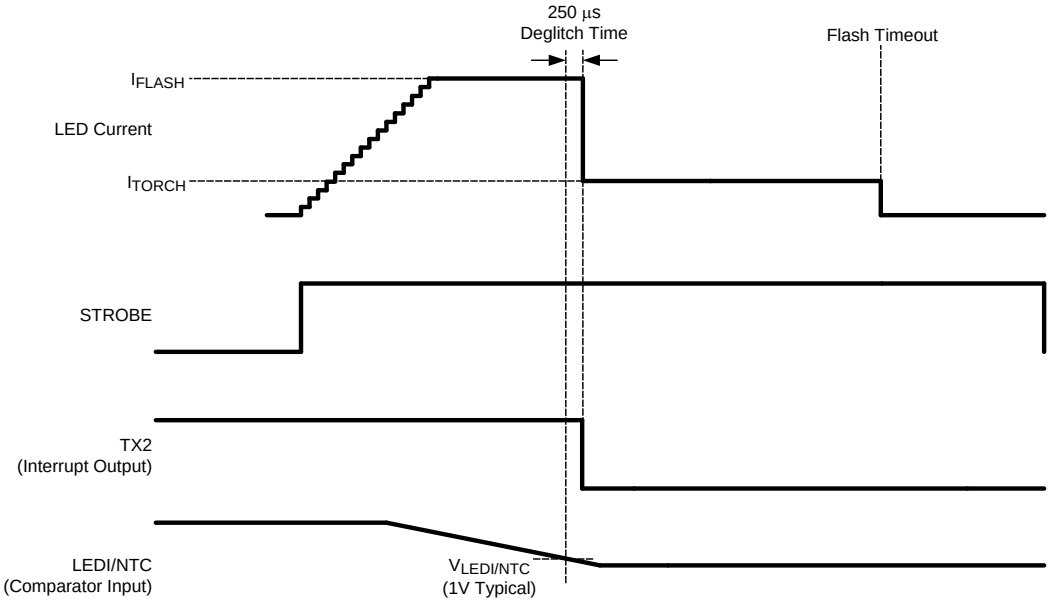

Figure 35. TX2 as an Interrupt Output (During an NTC Event)

7.4.11 NTC Mode

Writing a (1) to configuration register 1 bit [4] configures the LEDI/NTC pin for NTC mode. In this mode the indicator current source is disabled, and LEDI/NTC becomes the positive input to the an internal comparator. NTC mode operates as a LED current interrupt that is triggered when the voltage at LEDI/NTC goes below 1 V.

Two actions can be taken when the NTC comparator is tripped. With configuration register 2 bit [1] set to 0 the NTC interrupt forces the LED current from flash mode into torch mode. with configuration register 2 bit [1] set to 1, the NTC interrupt forces the LED current into shutdown.

Whether in NTC force torch or NTC shutdown, in order to re-enter flash mode after an NTC event, two things must occur. First, the NTC input must be above the 1-V threshold. Secondly, the flags register must be read.

To avoid noise from falsely triggering the NTC comparator, this mode incorporates a 250 µs de-glitch timer. With NTC mode active, $V_{LEDI/NTC}$ must go below the trip point (V_{TRIP}) and remain below it for 250 µs before the LEDs are forced into torch mode (or shutdown) and the NTC flag is written.

Copyright © 2011–2016, Texas Instruments Incorporated

7.4.12 Alternate External Torch (AET) Mode

With configuration register 2 bit [2] set to 1, the LM3560 is configured for AET mode, and the operation of TX1/TORCH becomes dependent on its occurrence relative to the STROBE input. In this mode, if TX1/TORCH goes high first, then STROBE goes high, the LEDs are forced into torch mode with no timeout. In this mode, if TX1/TORCH goes high after STROBE has gone high, then the TX1/TORCH pin operates as a normal LED current interrupt (TX1), and the LEDs turn off at the end of the timeout duration (see Figure 36).

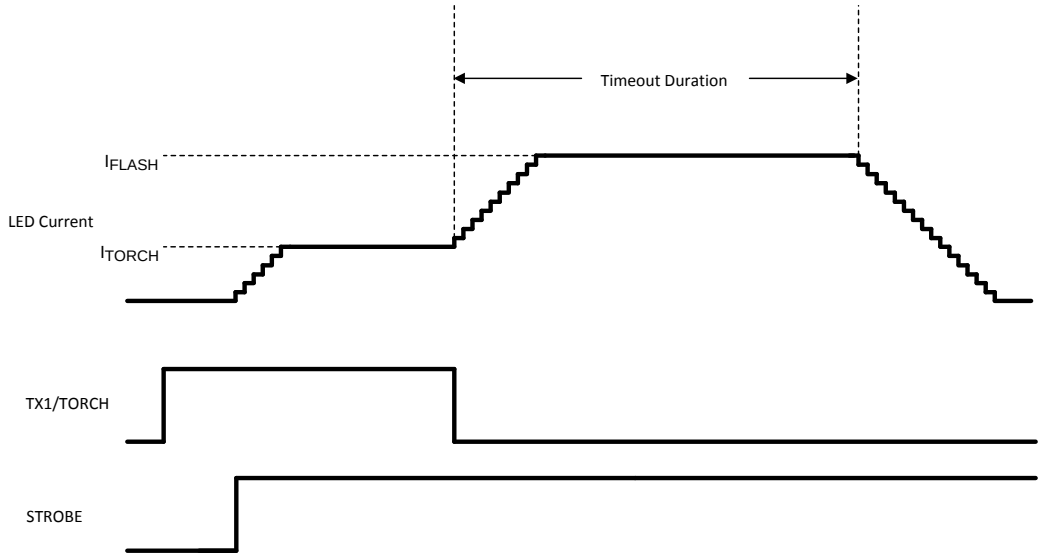

Figure 36. AET Mode Timing

7.4.13 Automatic Conversion Mode

With the ADC enabled, a conversion is performed each time a flash pulse is started. When a flash pulse is started bit [6] of the V_{LED} monitor register end-of-conversion (EOC) bit is automatically written with a 0. At the end of the conversion, bit [6] goes high signaling that the V_{LED} data is valid. A read back of the V_{LED} monitor register clears the EOC bit. Figure 26 shows the V_{LED} monitor automatic conversion.

7.4.14 Manual Conversion Mode

When this bit is set high the EOC bit (bit [6]) goes low, and a conversion is performed. When the conversion is complete, the EOC bit goes high again. Subsequent conversions are performed in manual mode by reading back the V_{LED} monitor register, which resets the EOC bit and starts another conversion (see Figure 30).

Copyright © 2011–2016, Texas Instruments Incorporated

7.5 I²C-Compatible Interface

7.5.1 START and STOP Conditions

The LM3560 is controlled via an I²C-compatible interface. START and STOP conditions classify the beginning and end of the I²C session. A START condition is defined as SDA transitioning from HIGH-to-LOW while SCL is HIGH. A STOP condition is defined as SDA transitioning from LOW-to-HIGH while SCL is HIGH. The I²C master always generates the START and STOP conditions.

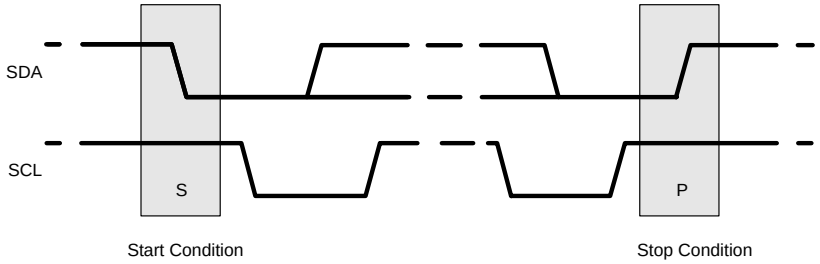

Figure 37. START and STOP Sequences

The I²C bus is considered busy after a START condition and free after a STOP condition. During data transmission the I²C master can generate repeated START conditions. A START and a repeated START condition are equivalent function-wise. The data on SDA must be stable during the HIGH period of the clock signal (SCL). In other words, the state of SDA can only be changed when SCL is LOW. Figure 38 shows the SDA and SCL signal timing for the I²C-compatible bus. See *Electrical Characteristics* for timing values.

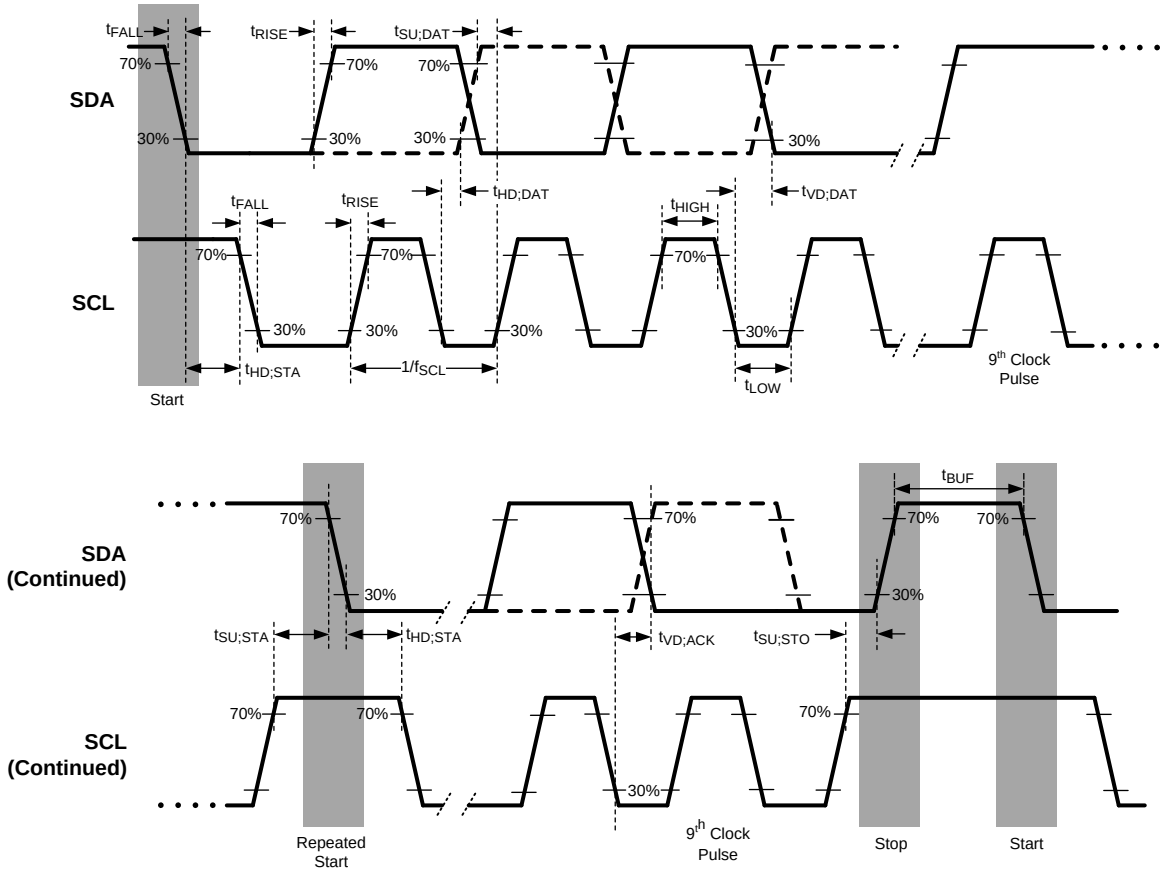

Figure 38. I²C-Compatible Timing

Copyright © 2011–2016, Texas Instruments Incorporated

I²C-Compatible Interface (continued)

7.5.2 I²C-Compatible Chip Address

The device address for the LM3560 is 1010011 (0xA7 for read and 0xA6 for write). After the START condition, the I²C master sends the 7-bit address followed by an eighth read or write bit (R/W). R/W = 0 indicates a WRITE and R/W = 1 indicates a READ. The second byte following the device address selects the register address to which the data is written. The third byte contains the data for the selected register.

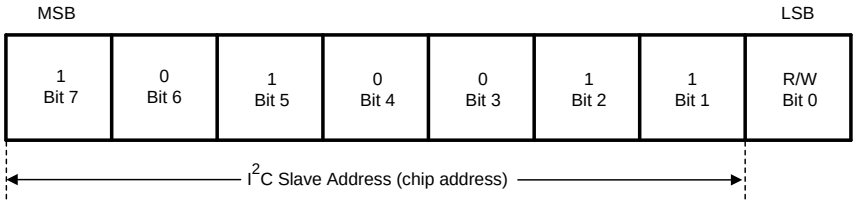

Figure 39. Device Address

7.5.3 Transferring Data

Every byte on the SDA line must be eight bits long, with the most significant bit (MSB) transferred first. Each byte of data must be followed by an acknowledge bit (ACK). The acknowledge related clock pulse (9th clock pulse) is generated by the master. The master releases SDA (HIGH) during the 9th clock pulse (write mode). The LM3560 pulls down SDA during the 9th clock pulse, signifying an acknowledge. An acknowledge is generated after each byte has been received.

Copyright © 2011–2016, Texas Instruments Incorporated

7.6 Register Descriptions

Table 2. LM3560 Internal Registers

REGISTER NAME	INTERNAL HEX ADDRESS	POWER ON/RESET VALUE
Enable	0x10	0x18
Privacy	0x11	0x58
Indicator	0x12	0x00
Indicator Blinking	0x13	0x00
Privacy PWM	0x14	0xF8
GPIO	0x20	0x80
V_{LED} Monitor (ADC)	0x30	0x80
ADC Delay	0x31	0x90
V_{IN} Monitor	0x80	0xC0
Last Flash	0x81	0x00
Torch Brightness	0xA0	0x52
Flash Brightness	0xB0	0xDD
Flash Duration	0xC0	0xEF
Flags	0xD0	0x00
Configuration 1	0xE0	0x6B
Configuration 2	0xF0	0xE0

7.6.1 Enable Register (Address 0x10)

Bits [1:0] of the enable register controls the on/off state of torch mode, flash mode, and privacy indicate mode. Bit 2 selects the peak current setting for privacy indicate mode (maximum or minimum torch current). Bits [4:3] turn on/off the main current sources (LED1 and LED2). Bit [5] sets the level or edge control for the STROBE input. Bits 7 and 6 control the Indicator current source (see Table 3).

Table 3. Enable Register Descriptions

Bit 7 (EN Blink)	**Bit 6 (EN Message Indicator)**	**Bit 5 (STROBE Level/Edge)**	**Bit 4 (LED2 ENABLE)**	**Bit 3 (LED1 Enable)**	**Bit 2 (Privacy Mode Peak Current Setting)**	**Bit 1 (EN1)**	**Bit 0 (EN0)**
0 = Message indicator blinking function is disabled(1) **(default)** 1 = Message indicator blinking function is enabled. the message indicator blinks the pattern programmed in the indicator register and indicator blinking register	0 = Message Indicator is disabled **(Default)** 1= Message Indicator is enabled.	0 = (Level Sensitive) When STROBE goes high, the flash current turns on and remain on for the duration the STROBE pin is held high or when the flash timeout occurs, whichever comes first. **(default)** 1 = (Edge Triggered) When STROBE goes high, the flash current turns on and remain on for the duration of the flash time-out.	0 = LED2 off 1 = LED2 on **(default)**	0 = LED1 off 1 = LED1 on **(default)**	0 = 31.25 mA **(default)** 1 = 250 mA	**Enable Bits** 00 = Current sources are shutdown **(default)** 01 = Privacy indicator mode 10 = Torch mode 11 = Flash mode (bits reset at timeout)	

(1) Bit 7 enables/disables the message indicator blinking function. With this bit set to 0 and Bit 6 set to 1, the message indicator turns on constantly at the programmed current as set in indicator register bits [2:0].

Copyright © 2011–2016, Texas Instruments Incorporated

7.6.2 Privacy Register (Address 0x11)

The privacy register contains the bits that control which current source is used for the privacy indicator (LED1 or LED2 or both), whether the privacy indicator turns off or remains on after the flash pulse terminates, and the duty cycle settings (between 10% and 80%) for setting the average privacy LED current (see Table 4).

Table 4. Privacy Register

Bit 7 (Blink 2)	Bit 6 (Blink 1)	Bit 5 (LED2 Privacy)	Bit 4 (LED1 Privacy)	Bit 3 (Privacy Terminate)	Bit 2 (PD2)	Bit 1 (PD1)	Bit 0 (PD0)
t_{BLINK} 00 = No Blinking 01 = 128 ms Blink Period **(Default)** 10 = 256 ms Blink Period 11 = 512 ms Blink Period		0 = LED2 is off for privacy mode **(Default)** 1 = LED2 is on for privacy mode	0 = LED1 is off for privacy mode 1 = LED1 is on for privacy mode **(Default)**	0 = Privacy mode turns back on at the end of the flash pulse 1 = Privacy mode remains off at the end of the flash pulse **(Default)**	Privacy mode current levels (% of minimum or maximum torch current, depending on bit [2] of enable register) 000 = 10% **(Default)** 001 = 20% 010 = 30% 011 = 40% 100 = 50% 101 = 60% 110 = 70% 111 = 80%		

Copyright © 2011–2016, Texas Instruments Incorporated

7.6.3 Indicator Register (Address 0x12)

The Indicator register contains the bits which control the following:

1. Indicator current level
2. Pulse width
3. Ramp times for turnon and turnoff of the indicator current source (see Figure 40 for the message indicator timing diagram).

Table 5. Indicator Register

Bit 7 (R2)	Bit 6 (R1)	Bit 5 (P3)	Bit 4 (P2)	Bit 3 (P1)	Bit 2 (I3)	Bit 1 (I2)	Bit 0 (I1)
(t_R and t_F) 00 = 78 ms **(default)** 01 = 156 ms 10 = 312 ms 11 = 624 ms		(PERIOD#) 000 = 0 **(default)** 001 = 1 010 = 2 011 = 3 100 = 4 101 = 5 110 = 6 111 = 7			(I_{IND}) 000 = 2.25 mA **(default)** 001 = 4.5 mA 010 = 6.75 mA 011 = 9 mA 100 = 11.25 mA 101 = 13.5 mA 110 = 15.75 mA 111 = 18 mA		

7.6.4 Indicator Blinking Register (Address 0x13)

The indicator blinking register contains the bits which control the following:

1. Number of periods ($t_{PERIOD} = t_R + t_F + 2 \times t_{PULSE}$)
2. Active Time ($t_{ACTIVE} = t_{PERIOD} \times$ PERIOD#)
3. Blank Time ($t_{BLANK} = t_{ACTIVE} \times$ BLANK#)
   – (see Figure 40)

Table 6. Indicator Blinking Register

Bit 7 (N/A)	Bit 6 (M3)	Bit 5 (M2)	Bit 4 (M1)	Bit 3 (PW4)	Bit 2 (PW3)	Bit 1 (PW2)	Bit 0 (PW1)
Not used	BLANK# 0000 = 0 **(default)** 0001 = 1 0010 = 2 0011 = 3 0100 = 4 0101 = 5 0110 = 6 0111 = 7 1000 = 8 1001 = 9 1010 = 10 1011 = 11 1100 = 12 1101 = 13 1110 = 14 1111 = 15			Pulse time (t_{PULSE}) 0000 = 0 **(default)** 0001 = 32 ms 0010 = 64 ms 0011 = 92 ms 0100 = 128 ms 0101 = 160 ms 0110 = 196 ms 0111 = 224 ms 1000 = 256 ms 1001 = 288 ms 1010 = 320 ms 1011 = 352 ms 1100 = 384 ms 1101 = 416 ms 1110 = 448 ms 1111 = 480 ms			

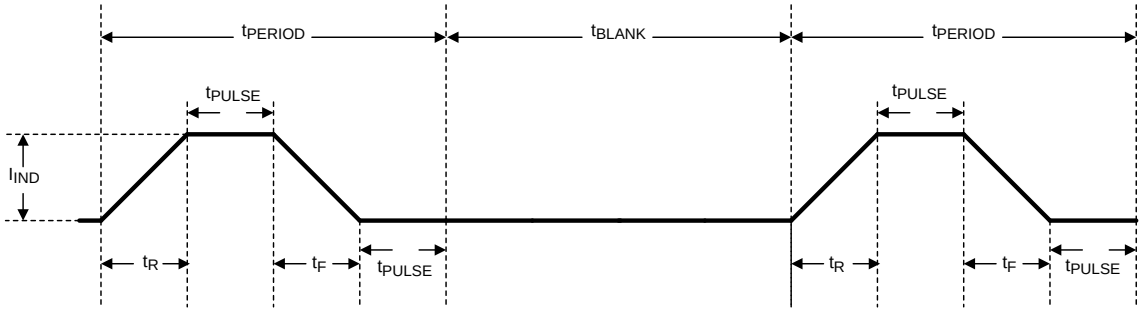

Figure 40. Message Indicator Timing Diagram

Copyright © 2011–2016, Texas Instruments Incorporated

7.6.5 Privacy PWM Period Register (Address 0x14)

The privacy PWM register contains the bits to control the PWM period for the privacy indicate mode (see Table 7).

Table 7. Privacy PWM Period Register

Bits 7-3 (Not Used)	Bit 2 (P3)	Bit 1 (P2)	Bit 0 (P1)
	000 = 5.12 ms **(default)** 001 = 2.56 ms 010 = 1.28 ms 011 = 640 µs 1XX = 320 µs		

7.6.6 GPIO Register (Address 0x20)

The GPIO register contains the control bits which change the state of the TX1/TORCH/GPIO1 pin and the TX2/INT/GPIO2 pins to general purpose I/Os (GPIOs). Additionally, bit 6 of this register contains the interrupt configuration bit. Table 8 describes the bit description and functionality of the GPIO register. To configure the TX1 or TX2 pins as GPIO outputs an initial double write is required to register 0x20. For example, to configure TX2 to output a logic high, an initial write of 0xB8 would need to occur twice, to force GPIO2 low. Subsequent writes to GPIO2 after the initial set-up, only requires a single write. To read back the GPIO inputs, a write then a read of register 0x20 must occur each time the data is read. For example, if GPIO2 is set up as a GPIO input and the GPIO2 input has then changed state, first a write to 0x20 must occur, then the following read back of register 0x20 shows the updated data. When configuring TX2 as an interrupt output, the TX2/GPIO2/INT pin must first be configured as a GPIO output (double write). For example, to configure TX2/GPIO2/INT for INT mode a write of 0xF8 to register 0x20 must be done twice.

Table 8. GPIO Register

Bit 7 (Not Used)	Bit 6 (TX2/INT/GPIO2 Interrupt Enable)	Bit 5 (TX2/INT/GPIO2 data)	Bit 4 (TX2/INT/GPIO2 data direction)	Bit 3 (TX2/INT/GPIO2 Control)	Bit 2 (TX1/TORCH/GPIO1 data)	Bit 1 (TX1/TORCH/GPIO1 data direction)	Bit 0 (TX1/TORCH/GPIO1 Control)
N/A	0 = TX2/INT/GPIO2 is configured according to bit 3 of this register **(default)**	This bit is the read or write data for the TX2/INT/GPIO2 pin in GPIO mode	0 = TX2/INT/GPIO2 is a GPIO Input **(default)**	0 = TX2/INT/GPIO is configured as a TX interrupt **(default)**	This bit is the read or write data for the GPIO1 pin in GPIO mode	0 = TX1/TORCH/GPIO1 is a GPIO input **(default)**	0 = TX1/TORCH/GPIO1 pin is configured as TX interrupt**(default)**
	1 = with bits [4:3] = 11, TX2/INT/GPIO2 is an interrupt output. See Interrupt Output (INT Mode).		1 = TX2/INT/GPIO2 is a GPIO output	1 = TX2/INT/GPIO2 is configured as a GPIO		1 TX1/TORCHGPIO1 is an output	1 = TX1/TORCH/GPIO1 pin is configured as a GPIO

7.6.7 LED Forward Voltage ADC (V_{LED} Monitor Register, Address 0x30)

The V_{LED} monitor register controls the internal 4 bit analog to digital converter. Bits [3:0] of this register contain the 4-bit data of the LED voltage. This data is the digitized voltage of the highest of either V_{LED1} to GND or V_{LED2} to GND. Bit [4] is the manual mode enable which provides for a manual conversion of the ADC. In manual mode the automatic conversion is still performed. In automatic conversion mode a conversion is performed each time a flash pulse is initiated. Bit [5] is the ADC shutdown bit. Bit [6] signals the end of conversion. This is a read-only bit that goes high when a conversion is complete and data is ready. A read of the V_{LED} monitor register clears the end-of-conversion bit (see Table 9).

Copyright © 2011–2016, Texas Instruments Incorporated

Table 9. V_{LED} Monitor Register Descriptions

Bit 7 (Not Used)	Bit 6 (End of Conversion)	Bit 5 (ADC Shutdown)	Bit 4 (Manual Mode Enable)	Bit 3 (ADC3)	Bit 2 (ADC2)	Bit 1 (ADC1)	Bit 0 (ADC0)
N/A	0 = Conversion in progress **(default)**	0 = ADC is enabled **(default)**	0 = Manual mode disabled **(default)**	0000 = (V_{LED} < 2.8 V) **(default)** 0001 = (2.8 V ≤ V_{LED} < 2.9 V) 0010 = (2.9 V ≤ V_{LED} < 3 V) 0011 = (3 V ≤ V_{LED} < 3.1 V) 0100 = (3.1 V ≤ V_{LED} < 3.2 V) 0101 = (3.2 V ≤ V_{LED} < 3.3 V) 0110 = (3.3 V ≤ V_{LED} < 3.4 V) 0111 = (3.4 V ≤ V_{LED} < 3.5 V) 1000 = (3.5 V ≤ V_{LED} < 3.6 V) 1001 = (3.6 V ≤ V_{LED} < 3.7 V) 1010 = (3.7 V ≤ V_{LED} < 3.8 V) 1011 = (3.8 V ≤ V_{LED} < 3.9 V) 1100 = (3.9 V ≤ V_{LED} < 4 V) 1101 = (4.0 V ≤ V_{LED} < 4.1 V) 1110 = (4.1 V ≤ V_{LED} < 4.2 V) 1111 = (4.2 V ≤ V_{LED})			
	1 = Conversion done	1 = ADC is shutdown, no conversion is performed	1 = manual mode is enabled				

7.6.8 ADC Delay Register (Address 0x31)

The ADC delay register programs the delay from when the EOC bit goes low to when a conversion is initiated. This delay applies to both manual mode and automatic mode. Bit 5 is the no-delay bit and can set the delay to effectively 0.

Table 10. ADC Delay Register Descriptions

Bit 7 (Not Used)	Bit 6 (Not used)	Bit 5 (No Delay)	Bit 4 (D1)	Bit 3 (D2)	Bit 2 (D3)	Bit 1 (D4)	Bit 0 (D5)
N/A		0 = Delay is set by bits [4:0] **(default)**	Bits [4:0] programs the delay from when the EOC bit goes low to when a conversion is started (250 µs/step). 00000 = 250 µs : 01111 = 4 ms **(default)** : 11111 = 8 ms				
		1 = no delay from when the EOC goes low to when the conversion is started.					

7.6.9 V_{IN} Monitor Register (Address 0x80)

The V_{IN} monitor register controls the enable bit for the V_{IN} monitor, the threshold select for the V_{IN} monitor, the enable bit for the V_{IN} flash monitor, and the threshold select for the V_{IN} flash monitor (see Table 11).

Table 11. V_{IN} Monitor Register Descriptions

Bit 7 (Not used)	Bit 6 (Not used)	Bit 5 (V_{IN} Flash Monitor Threshold 1)	Bit 4 (V_{IN} Flash Monitor Threshold 2)	Bit 3 (V_{IN} Flash Monitor enable)	Bit 2 (V_{IN} Monitor Threshold1)	Bit 1 (V_{IN} Monitor Threshold0)	Bit 0 (V_{IN} Monitor Enable)
N/A		00= 2.9 V **(default)** 01 = 3.0V 10 = 3.1V 11 = 3.2V		0 = V_{IN} flash monitor is disabled **(default)**	00 = 2.9 V **Default** 01= 3.0V 10 = 3.1V 11 = 3.2V		0 = V_{IN} monitor disabled (**default**)
				1 = V_{IN} flash monitor is enabled			1 = V_{IN} monitor is enabled

7.6.10 Last Flash Register (Address 0x81)

The last flash register is a read-only register, which is loaded with the flash code corresponding to the flash level that the LM3560 device was at if any of the following events happen:

1. Voltage at LEDI/NTC falling below V_{TRIP} with the device in NTC mode (configuration register 1 bit [4] = 1);
2. Input voltage falling below the programmed V_{IN} monitor threshold with device in V_{IN} monitor mode (V_{IN}

Copyright © 2011–2016, Texas Instruments Incorporated

monitor register bit [0] = 1); or

3. Input voltage falling below the programmed V_{IN} flash monitor threshold with the device in V_{IN} flash monitor mode (V_{IN} monitor register bit [3] = 1).

The last flash register is updated at the same time that the corresponding flag bit is written to the flags register. This results in a delay of 250 µs from when $V_{LEDI/NTC}$ (NTC mode) crosses V_{TRIP}, or V_{IN} (V_{IN} monitor enabled) crosses the V_{IN_TH}. During V_{IN} flash monitor there is a 8-µs deglitch time so the V_{IN} flash monitor flag is written (and the last flash register is updated) 8 µs after V_{IN} falls below V_{IN_FLASH}.

Table 12. Last Flash Register Descriptions

Bit 7 (LF2A)	Bit 6 (LF2B)	Bit 5 (LF2C)	Bit 4 (LF2D)	Bit 3 (LF1A)	Bit 2 (LF1B)	Bit 1 (LF1C)	Bit 0 (LF1D)
These bits are read only and represent the flash current code for LED2 that the LM3560 was at during the interrupt. 0000 = 62.5 mA 0001 = 125 mA 0010 = 187.5 mA 0011 = 250 mA 0100 = 312.5 mA 0101 = 375 mA 0110 = 437.5 mA 0111 = 500 mA 1000 = 562.5 mA 1001 = 625 mA 1010 = 687.5 mA 1011 = 750 mA 1100 = 812.5 mA 1101 = 875 mA 1110 = 937.5 mA 1111 = 1000 mA				These bits are read only and represent the flash current code for LED1 that the LM3560 was at during the interrupt. 0000 = 62.5 mA 0001 = 125 mA 0010 = 187.5 mA 0011 = 250 mA 0100 = 312.5 mA 0101 = 375 mA 0110 = 437.5 mA 0111 = 500 mA 1000 = 562.5 mA 1001 = 625 mA 1010 = 687.5 mA 1011 = 750 mA 1100 = 812.5 mA 1101 = 875 mA 1110 = 937.5 mA 1111 = 1000 mA			

7.6.11 Torch Brightness Register Descriptions (Address 0xA0)

Bits [2:0] of the torch brightness register set the torch current for LED1. Bits [5:3] set the torch current for LED2 (see Table 13).

Table 13. Torch Brightness Register Descriptions

Bit 7 (N/A)	Bit 6 (N/A)	Bit 5 (TC2A)	Bit 4 (TC2B)	Bit 3 (TC2C)	Bit 2 (TC1A)	Bit 1 (TC1B)	Bit 0 (TC1C)
(Not Used)		**LED2 Torch Current Select Bits** 000 = 31.25 mA (62.5 mA total) 001 = 62.5 mA (125 mA total) 010 =93.75 mA (187.5 mA total) **default** 011 = 125 mA (250 mA total) 100 = 156.25 mA (312.5 mA total) 101 = 187.5 mA (375 mA total) 110 = 218.75 mA (437.5 mA total) 111 = 250 mA (500 mA total)			**LED1 Torch Current Select Bits** 000 = 31.25 mA (62.5 mA total) 001 = 62.5 mA (125 mA total) 010 =93.75 mA (187.5 mA total) **default** 011 = 125 mA (250 mA total) 100 = 156.25 mA (312.5 mA total) 101 = 187.5 mA (375 mA total) 110 = 218.75 mA (437.5 mA total) 111 = 250 mA (500 mA total)		

Copyright © 2011–2016, Texas Instruments Incorporated

7.6.12 Flash Brightness Register (Address 0xB0)

Bits [3:0] of the flash brightness register set the flash current for LED1. Bits [7:4] set the flash current for LED2 (see Table 14).

Table 14. Flash Brightness Register Descriptions

Bit 7 (FC2A)	Bit 6 (FC2B)	Bit 5 (FC2C)	Bit 4 (FC2D)	Bit 3 (FC1A)	Bit 2 (FC1B)	Bit 1 (FC1C)	Bit 0 (FC1D)
Flash Current Select Bits 0000 = 62.5 mA 0001 = 125 mA 0010 = 187.5 mA 0011 = 250 mA 0100 = 312.5 mA 0101 = 375 mA 0110 = 437.5 mA 0111 = 500 mA 1000 = 562.5 mA 1001 = 625 mA 1010 = 687.5 mA 1011 = 750 mA 1100 = 812.5 mA 1101 = 875 mA **(default)** 1110 = 937.5 mA 1111 = 1000 mA				**Flash Current Select Bits** 0000 = 62.5 mA 0001 = 125 mA 0010 = 187.5 mA 0011 = 250 mA 0100 = 312.5 mA 0101 = 375 mA 0110 = 437.5 mA 0111 = 500 mA 1000 = 562.5 mA 1001 = 625 mA 1010 = 687.5 mA 1011 = 750 mA 1100 = 812.5 mA 1101 = 875 mA **(default)** 1110 = 937.5 mA 1111 = 1000 mA			

7.6.13 Flash Duration Register (Address 0xC0)

Bits [4:0] of the flash duration register set the flash timeout duration. Bits [6:5] set the switch current limit (see Table 15).

Table 15. Flash Duration Register Descriptions

Bit 7 (Not used)	Bit 6 (CL1)	Bit 5 (CL0)	Bit 4 (T4)	Bit 3 (T3)	Bit 2 (T2)	Bit 1 (T1)	Bit 0 (T0)
N/A	**Current Limit Select Bits** 00 = 1.6-A peak current limit 01 = 2.3-A peak current limit 10 = 3-A peak current limit 11 = 3.6-A peak current limit **(default)**		**Flash Time-out Select Bits** 00000 = 32 ms time-out 00001 = 64 ms time-out 00010 = 96 ms time-out 00011 = 128 ms time-out 00100 = 160 ms time-out 00101 = 192 ms time-out 00110 = 224 ms time-out 00111 = 256 ms time-out 01000 = 288 ms time-out 01001 = 320 ms time-out 01010 = 352 ms time-out 01011 = 384 ms time-out 01100 = 416 ms time-out 01101 = 448 ms time-out 01110 = 480 ms time-out 01111 = 512 ms time-out **(default)** 10000 = 544 ms time-out 10001 = 576 ms time-out 10010 = 608 ms time-out 10011 = 640 ms time-out 10100 = 672 ms time-out 10101 = 704 ms time-out 10110 = 736 ms time-out 10111 = 768 ms time-out 11000 = 800 ms time-out 11001 = 832 ms time-out 11010 = 864 ms time-out 11011 = 896 ms time-out 11100 = 928 ms time-out 11101 = 960 ms time-out 11110 = 992 ms time-out 11111 = 1024 ms time-out				

Copyright © 2011–2016, Texas Instruments Incorporated

7.6.14 Flags Register (Address 0xD0)

The flags register holds the flag bits indicating flash timeout, thermal shutdown, LED fault (open or short), TX interrupts (TX1 and TX2), LED thermal fault (NTC), V_{IN} monitor trip, and V_{IN} flash monitor trip. All flags are cleared on read back of the flags register. (See Table 16).

Table 16. Flags Register Descriptions

Bit 7 (V_{IN} Monitor)	Bit 6 (V_{IN} Flash Monitor)	Bit 5 (NTC Fault)	Bit 4 (TX2 Interrupt)	Bit 3 (TX1 Interrupt)	Bit 2 (LED Fault)	Bit 1 (Thermal Shutdown)	Bit 0 (Flash Time-out)
0 = V_{IN} is above the V_{IN} monitor threshold or V_{IN} monitor threshold is disabled. **(default)**	V_{IN} did not fall below the V_{IN} flash monitor threshold during flash pulse turnon or V_{IN} flash monitor is disabled **(default)**	0 = LEDI/NTC pin is above 1 V(**default**)	0 = TX2 has not changed state (**default**)	0 = TX1 has not changed state (**default**)	0 = Proper LED operation (**default**)	0 = Die temperature below thermal shutdown limit (**default**)	0 = Flash time-out did not expire (**default**)
1 = V_{IN} monitor is enabled and V_{IN} has fallen below the programmed threshold	1 = VIN flash monitor is enabled and V_{IN} fell below the programmed VIN monitor threshold during flash pulse turn-on	1 = NTC mode is enabled and LEDI/NTC has fallen below 1 V	1 = TX2 has changed state (TX2 mode only)	1 = TX1 has changed state (TX1 mode only)	1 = LED Failed (Open or Short)	1 = die temperature has crossed the thermal shutdown threshold	1 = Flash time-out expired

7.6.15 Configuration Register 1 (Address 0xE0)

Configuration register 1 holds the STROBE Enable bit, the STROBE polarity bit, the NTC Enable bit, the polarity selection bit for TX1 and TX2, and the hardware torch enable bit (see Table 17).

Table 17. Configuration Register 1 Descriptions

Bit 7 (Hardware Torch Mode Enable)	Bit 6 (TX2 Polarity)	Bit 5 (TX1 Polarity)	Bit 4 (NTC Mode Enable)	Bit 3 (STROBE Polarity)	Bit 2 (STROBE Input Enable)	Bit 1 (Not Used)	Bit 0 (Not Used)
0 = TX1/TORCH is a TX input **(default)**	0 = TX2 is configured for active low polarity	0 = TX1 is configured for active low polarity	0 = LEDI/NTC pin is configured as an indicator output **(default)**	0 = STROBE Input Enable is active low. Pulling STROBE low turns on flash current	0 = STROBE input disabled **(Default)**	N/A	N/A
1 = TX1/TORCH pin is a hardware TORCH enable. This bit is reset to 0 after a flash pulse.	1 =TX2 pin is configured for active high polarity **(default)**	1 = TX1 is configured for active high polarity **(default)**	1 = LEDI/NTC is configured as a comparator input for an NTC thermistor	1 = STROBE Input is active high. Pulling STROBE high turns on flash current **(default)**	1 = STROBE Input Enabled		

7.6.16 Configuration Register 2 (Address 0xF0)

Configuration register 2 holds the TX2 shutdown select bit, the NTC shutdown select bit, the AET mode select bit, the V_{IN} monitor shutdown bit, and the TX1 shutdown bit (see Table 18).

Table 18. Configuration Register 2 Bit Descriptions

Bit 7 (Not used)	Bit 6 (Not used)	Bit 5 (Not used)	Bit 4 (TX1 Shutdown)	Bit 3 (V_{IN} Monitor Shutdown)	Bit 2 (AET mode)	Bit 1 (NTC Shutdown)	Bit 0 (TX2 Shutdown)
N/A	N/A	N/A	0 = TX1 interrupt forces the LED current to the programmed torch current level **(default)**	0 = V_{IN} falling below the programmed V_{IN} monitor threshold forces the LED current into the programmed torch current level **(default**)	0 = AET abled **(default)**	0 = Voltage at LEDI/NTC falling below V_{TRIP} forces the LED current to the programmed torch current level.**(default)**	0 = TX2 interrupt forces the LED current to the programmed torch current level **(default)**
			1 = TX1 interrupt forces the LED current into shutdown.	1 = V_{IN} falling below the programmed V_{IN} monitor threshold forces the LED current into shutdown.	1 = AET mode enabled	1 = Voltage at LEDI/NTC falling below V_{TRIP} forces the LED current into shutdown.	1 = TX2 interrupt forces the LED current into shutdown.

Copyright © 2011–2016, Texas Instruments Incorporated

8 Application and Implementation

NOTE

Information in the following applications sections is not part of the TI component specification, and TI does not warrant its accuracy or completeness. TI's customers are responsible for determining suitability of components for their purposes. Customers should validate and test their design implementation to confirm system functionality.

8.1 Application Information

The LM3560 is a synchronous boost flash driver with dual 1000-mA high-side current sources. The 2-MHz DC-DC boost regulator allows for the use of small external components. The device operates from a typical input voltage from 2.5 V to 5.5 V and an ambient temperature range of –40°C to +85°C.

8.2 Typical Application

8.2.1 LM3560 Typical Application

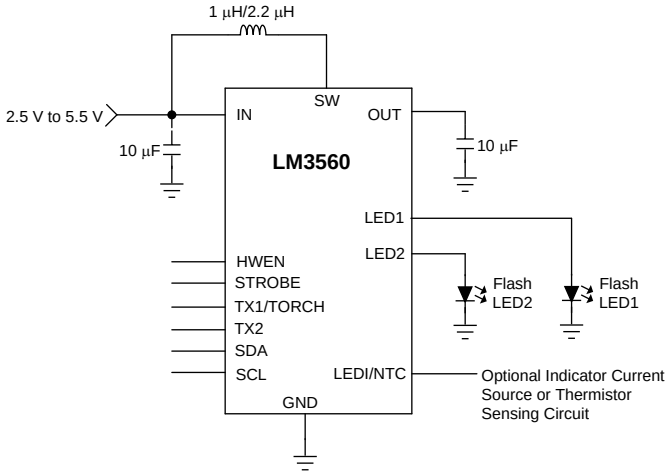

Copyright © 2016, Texas Instruments Incorporated

Figure 41. LM3560 Typical Application

8.2.1.1 Design Requirements

For typical synchronous boost flash driver applications, use the parameters listed in Table 19.

Table 19. Design Parameters

DESIGN PARAMETER	EXAMPLE VALUE
Minimum input voltage	2.5 V
Minimum output voltage	1.8 V
Maximum output current	5 V
Maximum output current	1.8 A
Switching frequency	2 MHz

8.2.1.2 Detailed Design Procedure

8.2.1.2.1 Output Capacitor Selection

The LM3560 is designed to operate with at least a 10-µF ceramic output capacitor. When the boost converter is running the output capacitor supplies the load current during the boost converters on-time. When the NMOS switch turns off the inductor energy is discharged through the internal PMOS switch, supplying power to the load and restoring charge to the output capacitor. This causes a sag in the output voltage during the NFET on-time and a rise in the output voltage during the NFET off-time. Therefore chose the output capacitor to limit the output ripple to an acceptable level depending on load current and input/output voltage differentials and also to ensure the converter remains stable.

For proper operation the output capacitor must be at least a 10-µF ceramic. Larger capacitors such as a 22 µF or multiple capacitors in parallel can be used if lower output voltage ripple is desired. To estimate the output voltage ripple considering the ripple due to capacitor discharge (ΔV_Q) and the ripple due to the equivalent series resistance (ESR) (ΔV_{ESR}) of the capacitor use Equation 1 and Equation 2:

For continuous conduction mode, the output voltage ripple due to the capacitor discharge is:

$$\Delta V_Q = \frac{I_{LED} \times (V_{OUT} - V_{IN})}{f_{SW} \times V_{OUT} \times C_{OUT}} \quad (1)$$

The output voltage ripple due to the output capacitors ESR is found by:

$$\Delta V_{ESR} = R_{ESR} \times \left(\frac{I_{LED} \times V_{OUT}}{V_{IN}} \right) + \Delta I_L$$

where

$$\Delta I_L = \frac{V_{IN} \times (V_{OUT} - V_{IN})}{2 \times f_{SW} \times L \times V_{OUT}} \quad (2)$$

In ceramic capacitors the ESR is very low so a close approximation is to assume that 80% of the output voltage ripple is due to capacitor discharge and 20% from ESR. Table 20 lists different manufacturers for various output capacitors and their case sizes suitable for use with the LM3560.

8.2.1.2.2 Input Capacitor Selection

Choosing the correct size and type of input capacitor helps minimize the input voltage ripple caused by the switching of the LM3560's boost converter, and reduces noise on the boost converters input terminal that can feed through and disrupt internal analog signals. In Figure 41 a 10-µF ceramic input capacitor works well. It is important to place the input capacitor as close as possible to the input (IN) pins of the LM3560 device. This reduces the series resistance and inductance that can inject noise into the device due to the input switching currents. Table 20 lists various input capacitors that are recommended for use with the LM3560.

Table 20. Recommended Input/Output Capacitors (X5r Dielectric)

MANUFACTURER	PART NUMBER	VALUE	CASE SIZE	VOLTAGE RATING
TDK Corporation	C1608JB0J106M	10 µF	0603 (1.6 mm × 0.8mm × 0.8 mm)	6.3 V
TDK Corporation	C2012JB1A106M	10 µF	0805 (2 mm ×1.25 mm × 1.25 mm)	10 V
Murata	GRM21BR61A106KE19	10 µF	0805 (2 mm × 1.25 mm × 1.25 mm)	10 V

Copyright © 2011–2016, Texas Instruments Incorporated

8.2.1.2.3 Inductor Selection

The LM3560 is designed to use a 1-µH or 2.2-µH inductor. Table 21 lists various inductors and their manufacturers that can work well with the LM3560. When the device is boosting (V_{OUT} > V_{IN}) the inductor is typically the largest area of efficiency loss in the circuit. Therefore, choosing an inductor with the lowest possible series resistance is important. Additionally, the saturation rating of the inductor must be greater than the maximum operating peak current of the LM3560. This prevents excess efficiency loss that can occur with inductors that operate in saturation. For proper inductor operation and circuit performance, ensure that the inductor saturation and the peak current limit setting of the LM3560 are greater than I_{PEAK} in the following calculation:

$$I_{PEAK} = \frac{I_{LOAD}}{\eta} \times \frac{V_{OUT}}{V_{IN}} + \Delta I_L \quad \text{where} \quad \Delta I_L = \frac{V_{IN} \times (V_{OUT} - V_{IN})}{2 \times f_{SW} \times L \times V_{OUT}} \tag{3}$$

where

- f_{SW} = 2MHz
- efficiency can be found in *Typical Characteristics*

Table 21. Recommended Inductors

MANUFACTURER	L	PART NUMBER	DIMENSIONS (L × W × H)	I_{SAT}	R_{DC}
TOKO	2.2 µH	FDSD0312-H-2R02M	3 mm × 3.2 mm × 1.2 mm	2.3 A	105 mΩ
TOKO	1 µH	FDSD0312-H-1R0M	3 mm × 3.2 mm × 1.2 mm	3.4 A	43 mΩ
TDK	1 µH	VLS252012T-1R0N	2 mm × 2.5 mm × 1.2 mm	2.45 A	73 mΩ
TDK	1 µH	VLS4012ET-1R0N	4 mm × 4 mm × 1.2 mm	2.8 A	50 mΩ

8.2.2 NTC Thermistor Application

Programming bit [4] of Configuration register 1 with a 1 selects NTC mode and makes the LEDI/NTC pin a comparator input for flash LED thermal sensing. Figure 42 shows the LM3560 using the NTC thermistor circuit. The thermal sensor resistor divider is composed of R3 and R(T), where R(T) is the negative temperature coefficient thermistor, V_{BIAS} is the bias voltage for the resistive divider, and R3 is used to linearize the response of the NTC around the NTC comparators trip point. C_{BYP} is used to filter noise at the NTC input.

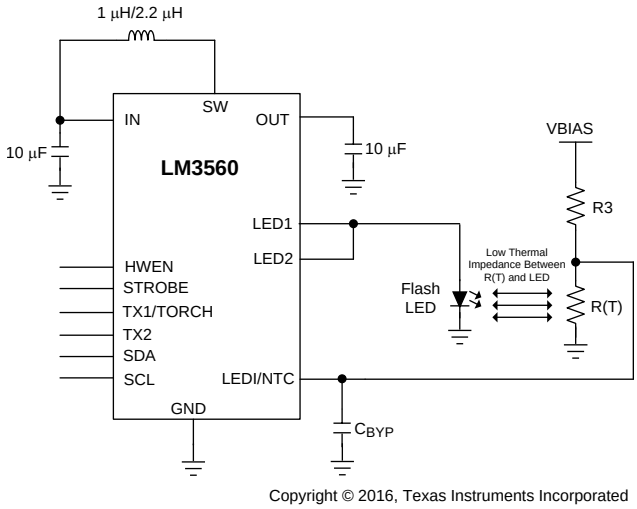

Figure 42. Typical Application Circuit With Thermistor

In designing the NTC circuit, values for V_{BIAS}, R(T) and R3, must be chosen. To begin with, NTC thermistors have a non-linear relationship between temperature and resistance:

$$R(T) = R_{25°C} \times e^{\left[\beta\left(\frac{1}{T\,°C + 273} - \frac{1}{298}\right)\right]}$$

where

- β is given in the thermistor data sheet
- R_{25C} is the value of the thermistor at 25°C (4)

R3 is chosen so that the temperature to resistance relationship becomes more linear and can be found by solving for R3 in the R(T) and R3 resistive divider:

$$R3 = \frac{R_{T(TRIP)}(V_{BIAS} - V_{TRIP})}{V_{TRIP}}$$

where

- $R(T)_{TRIP}$ is the thermistor's value at the temperature trip point
- V_{TRIP} = 1V (typical) (5)

As an example, with V_{BIAS} = 2.5 V and a thermistor whose nominal value at 25°C is 100 kΩ and a β = 4500 K, the trip point is chosen to be 93°C. The value of R(T) at 93°C is:

$$R(T) = 100k\Omega \times e^{\beta\left(\frac{1}{93+273} - \frac{1}{298}\right)} = 6.047k\Omega$$

$$R3 \text{ is then}: \frac{6.047k\Omega \times (2.5V - 1V)}{1V} = 9.071k\Omega \quad (6)$$

Figure 43 shows the linearity of the thermistor resistive divider of the previous example.

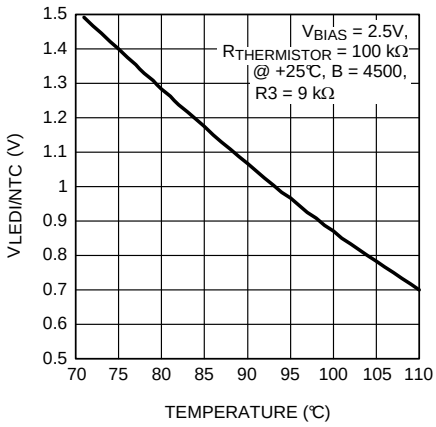

Figure 43. Thermistor Resistive Divider Response vs Temperature

Copyright © 2011–2016, Texas Instruments Incorporated

8.2.3 Application Curves

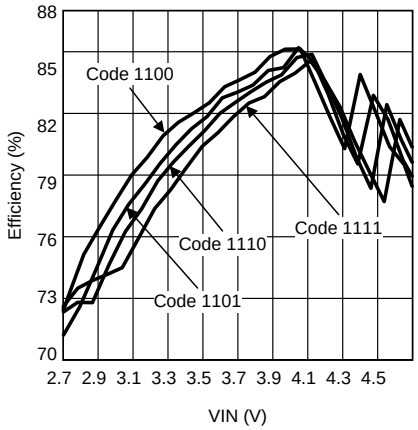

Highest 4 Flash Brightness Codes

Figure 44. LED Efficiency vs V_{IN}, LED1 and LED2

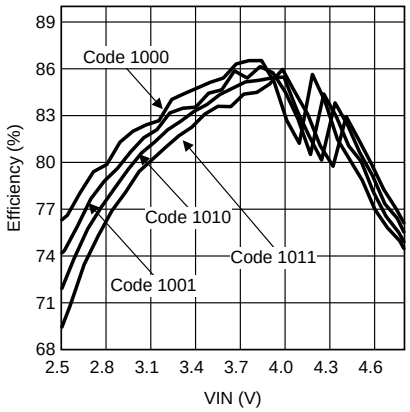

Upper Middle 4 Flash Brightness Codes

Figure 45. LED Efficiency vs V_{IN}, LED1 and LED2

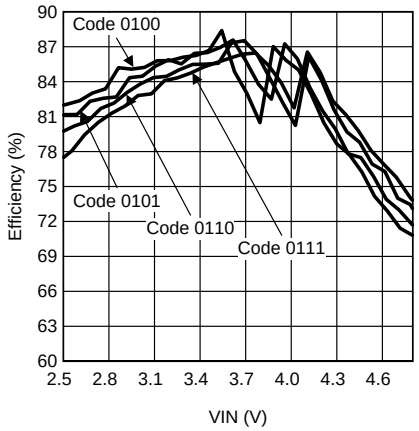

Lower Middle 4 Flash Brightness Codes

Figure 46. LED Efficiency vs V_{IN}, LED1 and LED2

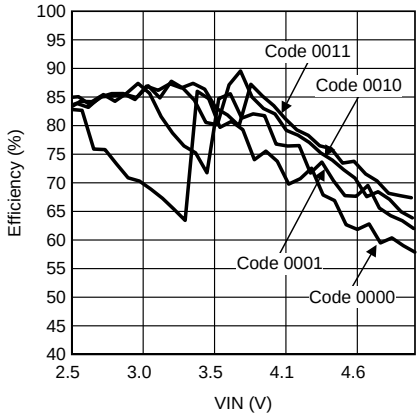

Lowest 4 Flash Brightness Codes

Figure 47. LED Efficiency vs V_{IN}, LED1 and LED2

9 Power Supply Recommendations

The LM3560 is designed to operate from an input supply range of 2.5 V to 5.5 V. This input supply must be well regulated and provide the peak current required by the LED configuration and inductor selected.

Copyright © 2011–2016, Texas Instruments Incorporated

10 Layout

10.1 Layout Recommendations

The high switching frequency and large switching currents of the LM3560 make the choice of layout important. Use the following steps as a reference to ensure the device is stable and maintains proper LED current regulation across its intended operating voltage and current range.

1. Place C_{IN} on the top layer (same layer as the LM3560) and as close as possible to the device. The input capacitor conducts the driver currents during the low side MOSFET turnon and turnoff and can detect current spikes over 1 A in amplitude. Connecting the input capacitor through short wide traces to both the IN and GND pins reduces the inductive voltage spikes that occur during switching and which can corrupt the V_{IN} line.
2. Place C_{OUT} on the top layer (same layer as the LM3560) and as close as possible to the OUT and GND pins. The returns for both C_{IN} and C_{OUT} should come together at one point, and as close as possible to the GND pin. Connecting C_{OUT} through short wide traces reduce the series inductance on the OUT and GND pins that can corrupt the V_{OUT} and GND line and cause excessive noise in the device and surrounding circuitry.
3. Connect the inductor on the top layer close to the SW pin. There must be a low-impedance connection from the inductor to SW due to the large DC inductor current, and at the same time the area occupied by the SW node must be small so as to reduce the capacitive coupling of the high dV/dt present at SW that can couple into nearby traces.
4. Avoid routing logic traces near the SW node so as to avoid any capacitively coupled voltages from SW onto any high-impedance logic lines such as TX1/TORCH/GPIO1, TX2/INT/GPIO2, HWEN, LEDI/NTC (NTC mode), SDA, and SCL. A good approach is to insert an inner layer GND plane underneath the SW node and between any nearby routed traces. This creates a shield from the electric field generated at SW.
5. Terminate the flash LED cathodes directly to the GND pin of the LM3560. If possible, route the LED returns with a dedicated path to keep the high amplitude LED currents out of the GND plane. For flash LEDs that are routed relatively far away from the LM3560, a good approach is to sandwich the forward and return current paths over the top of each other on two layers. This helps reduce the inductance of the LED current paths.
6. The NTC thermistor is intended to have its return path connected to the LEDs cathode. This allows the thermistor resistive divider voltage (V_{NTC}) to trip the comparators threshold as V_{NTC} is falling. Additionally, the thermistor-to-LED cathode junction should be connected as close as possible in order to reduce the thermal impedance from the LED and the thermistor. The drawback is that the thermistor's return detects the switching currents from the boost converter of the device. Because of this, it is necessary to have a filter capacitor at the NTC pin which terminates close to the GND of the LM3560 (see C_{BYP} in *Figure 42*).

Copyright © 2011–2016, Texas Instruments Incorporated

10.2 Layout Example

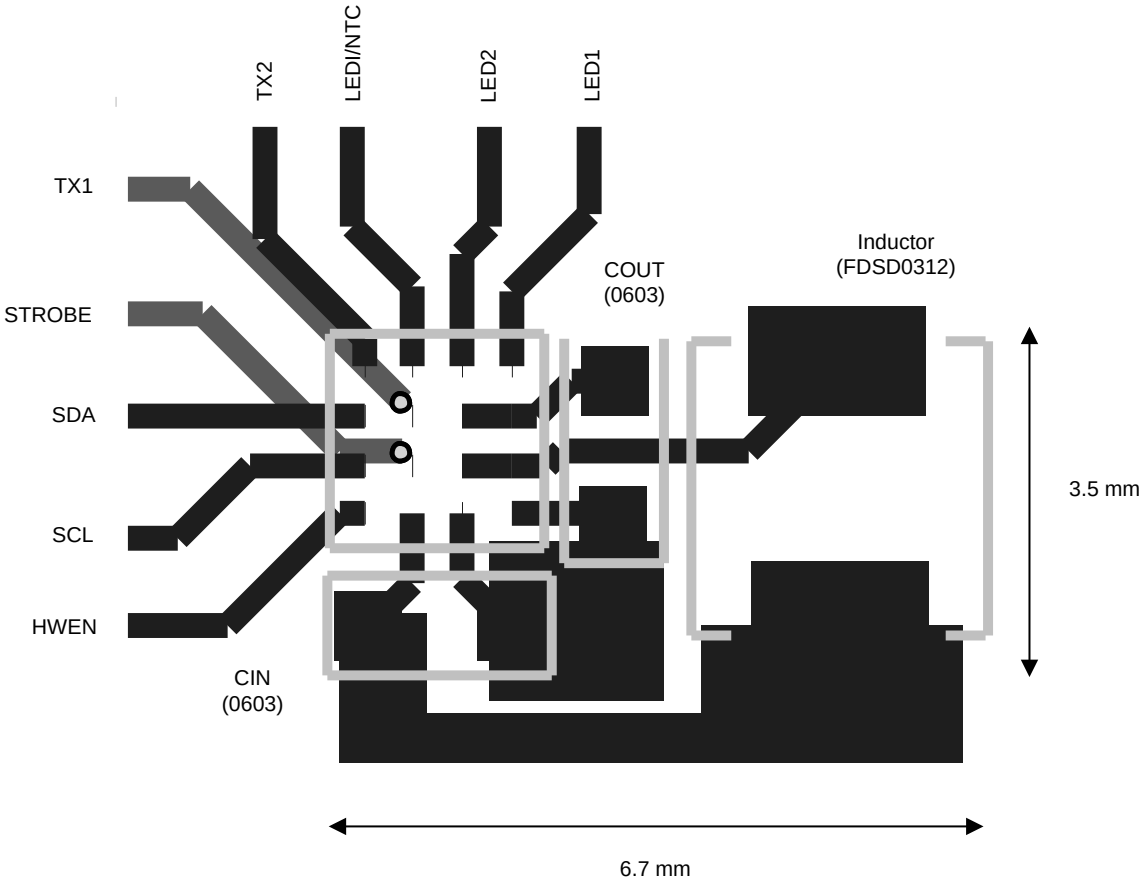

Figure 48. LM3560 Layout

11 Device and Documentation Support

11.1 Device Support

11.1.1 Third-Party Products Disclaimer

TI'S PUBLICATION OF INFORMATION REGARDING THIRD-PARTY PRODUCTS OR SERVICES DOES NOT CONSTITUTE AN ENDORSEMENT REGARDING THE SUITABILITY OF SUCH PRODUCTS OR SERVICES OR A WARRANTY, REPRESENTATION OR ENDORSEMENT OF SUCH PRODUCTS OR SERVICES, EITHER ALONE OR IN COMBINATION WITH ANY TI PRODUCT OR SERVICE.

11.2 Documentation Support

11.2.1 Related Documentation

For additional information, see the following:

AN-1112 DSBGA Wafer Level Chip Scale Package

11.3 Receiving Notification of Documentation Updates

To receive notification of documentation updates — go to the product folder for your device on ti.com. In the upper right-hand corner, click the *Alert me* button to register and receive a weekly digest of product information that has changed (if any). For change details, check the revision history of any revised document.

11.4 Community Resources

The following links connect to TI community resources. Linked contents are provided "AS IS" by the respective contributors. They do not constitute TI specifications and do not necessarily reflect TI's views; see TI's Terms of Use.

TI E2E™ Online Community ***TI's Engineer-to-Engineer (E2E) Community.*** Created to foster collaboration among engineers. At e2e.ti.com, you can ask questions, share knowledge, explore ideas and help solve problems with fellow engineers.

Design Support ***TI's Design Support*** Quickly find helpful E2E forums along with design support tools and contact information for technical support.

11.5 Trademarks

E2E is a trademark of Texas Instruments.
All other trademarks are the property of their respective owners.

11.6 Electrostatic Discharge Caution



This integrated circuit can be damaged by ESD. Texas Instruments recommends that all integrated circuits be handled with appropriate precautions. Failure to observe proper handling and installation procedures can cause damage.

ESD damage can range from subtle performance degradation to complete device failure. Precision integrated circuits may be more susceptible to damage because very small parametric changes could cause the device not to meet its published specifications.

11.7 Glossary

SLYZ022 — *TI Glossary*.

This glossary lists and explains terms, acronyms, and definitions.

12 Mechanical, Packaging, and Orderable Information

The following pages include mechanical, packaging, and orderable information. This information is the most current data available for the designated devices. This data is subject to change without notice and revision of this document. For browser-based versions of this data sheet, refer to the left-hand navigation.

Copyright © 2011–2016, Texas Instruments Incorporated

PACKAGING INFORMATION

Orderable part number	Status (1)	Material type (2)	Package | Pins	Package qty | Carrier	RoHS (3)	Lead finish/ Ball material (4)	MSL rating/ Peak reflow (5)	Op temp (°C)	Part marking (6)
LM3560TLE-20/NOPB	Active	Production	DSBGA (YZR) | 16	250 | SMALL T&R	Yes	SNAGCU	Level-1-260C-UNLIM	-40 to 85	D73B
LM3560TLE-20/NOPB.A	Active	Production	DSBGA (YZR) | 16	250 | SMALL T&R	Yes	SNAGCU	Level-1-260C-UNLIM	-40 to 85	D73B
LM3560TLX-20/NOPB	Active	Production	DSBGA (YZR) | 16	3000 | LARGE T&R	Yes	SNAGCU	Level-1-260C-UNLIM	-40 to 85	D73B
LM3560TLX-20/NOPB.A	Active	Production	DSBGA (YZR) | 16	3000 | LARGE T&R	Yes	SNAGCU	Level-1-260C-UNLIM	-40 to 85	D73B
LM3560TLX/NOPB	Active	Production	DSBGA (YZR) | 16	3000 | LARGE T&R	Yes	SNAGCU	Level-1-260C-UNLIM	-40 to 85	3560
LM3560TLX/NOPB.A	Active	Production	DSBGA (YZR) | 16	3000 | LARGE T&R	-	SNAGCU	Level-1-260C-UNLIM	-40 to 85	3560

(1) **Status:** For more details on status, see our product life cycle.

(2) **Material type:** When designated, preproduction parts are prototypes/experimental devices, and are not yet approved or released for full production. Testing and final process, including without limitation quality assurance, reliability performance testing, and/or process qualification, may not yet be complete, and this item is subject to further changes or possible discontinuation. If available for ordering, purchases will be subject to an additional waiver at checkout, and are intended for early internal evaluation purposes only. These items are sold without warranties of any kind.

(3) **RoHS values:** Yes, No, RoHS Exempt. See the TI RoHS Statement for additional information and value definition.

(4) **Lead finish/Ball material:** Parts may have multiple material finish options. Finish options are separated by a vertical ruled line. Lead finish/Ball material values may wrap to two lines if the finish value exceeds the maximum column width.

(5) **MSL rating/Peak reflow:** The moisture sensitivity level ratings and peak solder (reflow) temperatures. In the event that a part has multiple moisture sensitivity ratings, only the lowest level per JEDEC standards is shown. Refer to the shipping label for the actual reflow temperature that will be used to mount the part to the printed circuit board.

(6) **Part marking:** There may be an additional marking, which relates to the logo, the lot trace code information, or the environmental category of the part.

Multiple part markings will be inside parentheses. Only one part marking contained in parentheses and separated by a "~" will appear on a part. If a line is indented then it is a continuation of the previous line and the two combined represent the entire part marking for that device.

Important Information and Disclaimer: The information provided on this page represents TI's knowledge and belief as of the date that it is provided. TI bases its knowledge and belief on information provided by third parties, and makes no representation or warranty as to the accuracy of such information. Efforts are underway to better integrate information from third parties. TI has taken and continues to take reasonable steps to provide representative and accurate information but may not have conducted destructive testing or chemical analysis on incoming materials and chemicals. TI and TI suppliers consider certain information to be proprietary, and thus CAS numbers and other limited information may not be available for release.

In no event shall TI's liability arising out of such information exceed the total purchase price of the TI part(s) at issue in this document sold by TI to Customer on an annual basis.

TAPE AND REEL INFORMATION

REEL DIMENSIONS

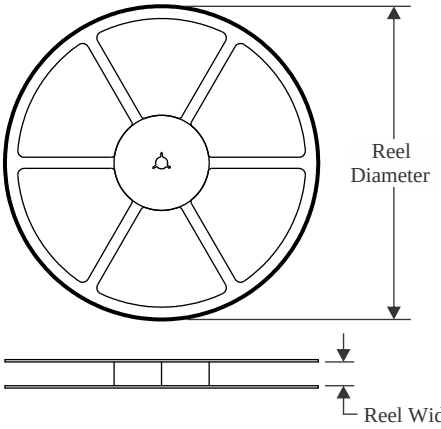

TAPE DIMENSIONS

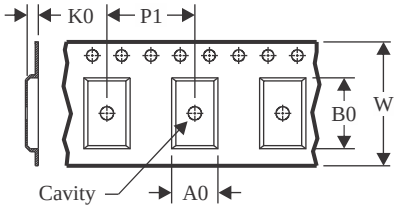

A0	Dimension designed to accommodate the component width
B0	Dimension designed to accommodate the component length
K0	Dimension designed to accommodate the component thickness
W	Overall width of the carrier tape
P1	Pitch between successive cavity centers

QUADRANT ASSIGNMENTS FOR PIN 1 ORIENTATION IN TAPE

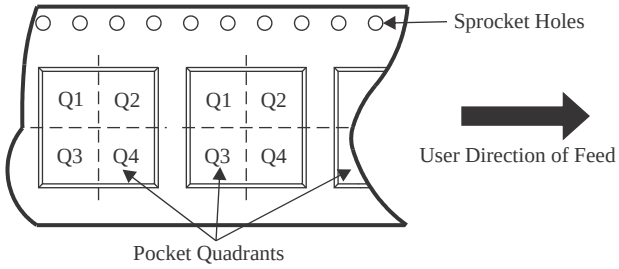

*All dimensions are nominal

Device	Package Type	Package Drawing	Pins	SPQ	Reel Diameter (mm)	Reel Width W1 (mm)	A0 (mm)	B0 (mm)	K0 (mm)	P1 (mm)	W (mm)	Pin1 Quadrant
LM3560TLE-20/NOPB	DSBGA	YZR	16	250	178.0	8.4	2.08	2.08	0.76	4.0	8.0	Q1
LM3560TLX-20/NOPB	DSBGA	YZR	16	3000	178.0	8.4	2.08	2.08	0.76	4.0	8.0	Q1
LM3560TLX/NOPB	DSBGA	YZR	16	3000	178.0	8.4	2.08	2.08	0.76	4.0	8.0	Q1

TAPE AND REEL BOX DIMENSIONS

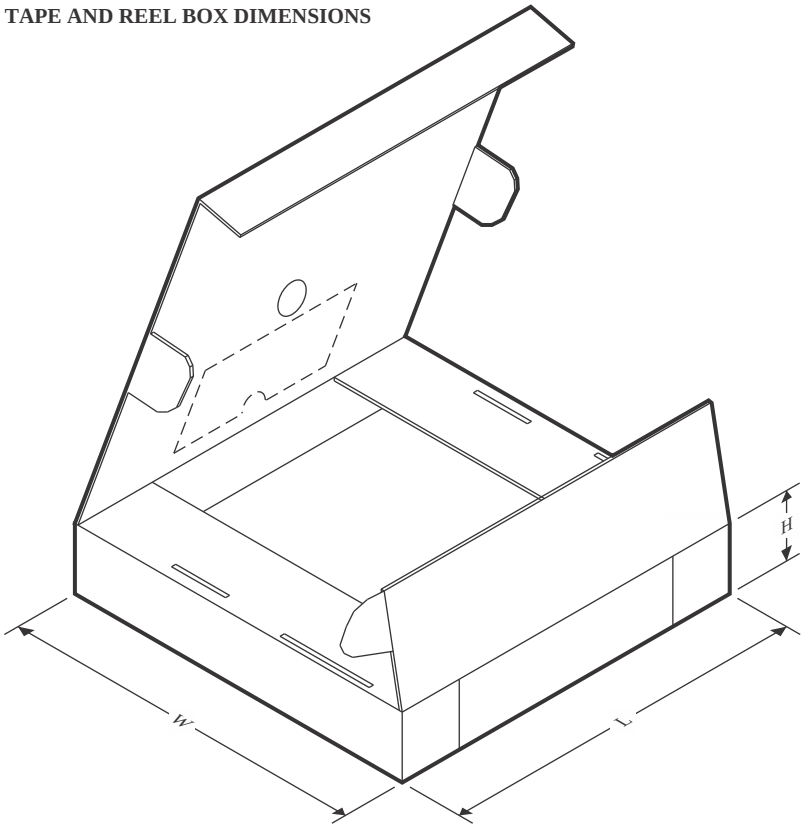

*All dimensions are nominal

Device	Package Type	Package Drawing	Pins	SPQ	Length (mm)	Width (mm)	Height (mm)
LM3560TLE-20/NOPB	DSBGA	YZR	16	250	208.0	191.0	35.0
LM3560TLX-20/NOPB	DSBGA	YZR	16	3000	208.0	191.0	35.0
LM3560TLX/NOPB	DSBGA	YZR	16	3000	208.0	191.0	35.0

YZR0016

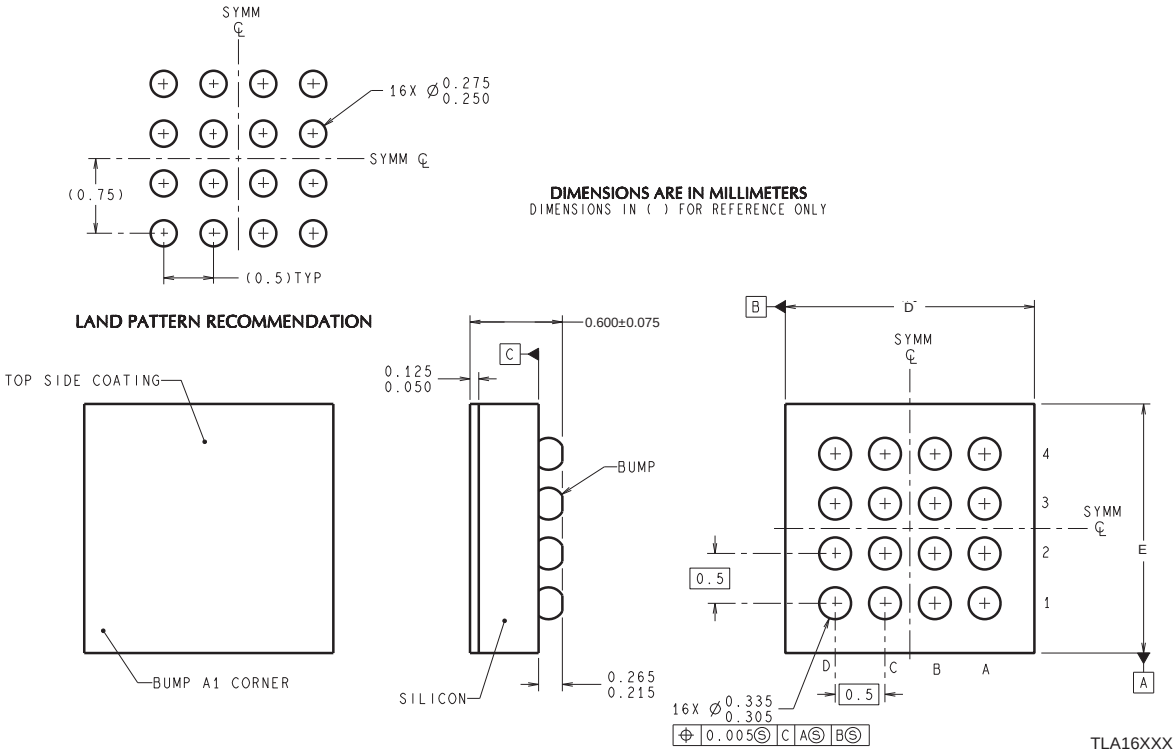

D: Max = 1.99 mm, Min = 1.93 mm

E: Max = 1.99 mm, Min = 1.93 mm

4215051/A 12/12

NOTES: A. All linear dimensions are in millimeters. Dimensioning and tolerancing per ASME Y14.5M-1994.
B. This drawing is subject to change without notice.

IMPORTANT NOTICE AND DISCLAIMER

TI PROVIDES TECHNICAL AND RELIABILITY DATA (INCLUDING DATA SHEETS), DESIGN RESOURCES (INCLUDING REFERENCE DESIGNS), APPLICATION OR OTHER DESIGN ADVICE, WEB TOOLS, SAFETY INFORMATION, AND OTHER RESOURCES “AS IS” AND WITH ALL FAULTS, AND DISCLAIMS ALL WARRANTIES, EXPRESS AND IMPLIED, INCLUDING WITHOUT LIMITATION ANY IMPLIED WARRANTIES OF MERCHANTABILITY, FITNESS FOR A PARTICULAR PURPOSE OR NON-INFRINGEMENT OF THIRD PARTY INTELLECTUAL PROPERTY RIGHTS.

These resources are intended for skilled developers designing with TI products. You are solely responsible for (1) selecting the appropriate TI products for your application, (2) designing, validating and testing your application, and (3) ensuring your application meets applicable standards, and any other safety, security, regulatory or other requirements.

These resources are subject to change without notice. TI grants you permission to use these resources only for development of an application that uses the TI products described in the resource. Other reproduction and display of these resources is prohibited. No license is granted to any other TI intellectual property right or to any third party intellectual property right. TI disclaims responsibility for, and you will fully indemnify TI and its representatives against, any claims, damages, costs, losses, and liabilities arising out of your use of these resources.

TI’s products are provided subject to TI’s Terms of Sale or other applicable terms available either on ti.com or provided in conjunction with such TI products. TI’s provision of these resources does not expand or otherwise alter TI’s applicable warranties or warranty disclaimers for TI products.

TI objects to and rejects any additional or different terms you may have proposed.

Mailing Address: Texas Instruments, Post Office Box 655303, Dallas, Texas 75265
Copyright © 2025, Texas Instruments Incorporated