T9AP1D52-12 Product Details

Share Print Email



T9AP1D52-12

TE Internal Number: 6-1419102-0

Active

View 3D PDF

Industrial Relays (General Purpose)

Converted to EU RoHS but not ELV Compliant (Statement of Compliance)

Product Highlights:

- T9A Series
- Contact - Current Class = 20A to 30A Class, Greater Than 16A
- Contact - Rated Current = 30 A
- Terminal Type = Quick Connect
- Contact - Arrangement = 1 Form A (NO)

View all Features

Quick Links

- Pricing & Availability
- Search for Tooling
- Product Feature Selector
- Contact Us About This Product

Add to My Part List | Request Sample | Find Similar Products

Buy Product

Documentation & Additional Information

Product Drawings:
- None Available

Catalog Pages/Data Sheets:
- T9A DC Coil 30 Amp PC Board or Panel Mount Relay (PDF, English)

Product Specifications:
- None Available

Application Specifications:
- None Available

Instruction Sheets:
- None Available

CAD Files: (CAD Format & Compression Information)
- 2D Drawing (DXF, Version G)
- 3D Model (IGES, Version G)
- 3D Model (STEP, Version G)

List all Documents

Additional Information:
- Product Line Information

Additional Product Images:
- Schematic
- Wiring Diagram

Related Products:
- Tooling

Product Features (Please use the Product Drawing for all design activity)

Mechanical Attachment:
- Mounting Options = Flange Mount

Electrical Characteristics:
- Contact - Current Class = 20A to 30A Class, Greater Than 16A
- Contact - Rated Current (A) = 30
- Contact - Limiting Continuous Current (A) = 30
- Contact - Limiting Making Current (A) = 30
- Contact - Limiting Breaking Current (A) = 30
- Insulation - Initial Dielectric Between Coil/Contact Class = 1500V to 2500VA Class
- Insulation - Initial Dielectric Between Open Contacts (V rms) = 1500
- Insulation - Initial Dielectric Between Contacts and Coil (V rms) = 2500
- Contact - Rated Voltage (VAC) = 277
- Contact - Switching Voltage Max. (VAC) = 277

Body Features:
- Mount Type = Panel Mount
- Weight (g [oz]) = 33.00 [1.164]

Contact Features:
- Terminal Type = Quick Connect
- Contact Material = AgCdO
- Contact - Number of Poles = 1

Configuration Features:
- Contact - Arrangement = 1 Form A (NO)
- Coil - Magnetic System = Monostable, DC
- Coil - Special Features = UL Coil Insulation Class F

Industry Standards:
- RoHS/ELV Compliance = RoHS/Not ELV Compliant
- Lead Free Solder Processes = Wave solder capable to 240°C, Wave solder capable to 260°C

- Contact - Limiting Short-Time Current (A) = 30
- Contact - Switching Recommended Load, Min. = 1000mA at 5V
- Coil - Rated Voltage (VDC) = 12
- Coil - Resistance (Ω) = 144
- Coil - Rated Power, DC (mW) = 1000
- Coil - Rated Power Class = 800mW to 1000mW Class
- Insulation - Initial Insulation Resistance (MΩ) = 1000000
- Insulation - Creepage Class = 5.5mm to 8mm Class
- Insulation - Clearance Class = 2.5mm to 4mm Class
- Insulation - Special Features = 6000V Initial Surge Withstand Voltage between Contacts and Coil

Dimensions:

- Mechanical - Length Class = 30mm to 35mm Class
- Length (mm [in]) = 32.50 [1.281]
- Mechanical - Width Class = 25mm to 30mm Class
- Width (mm [in]) = 27.40 [1.079]
- Mechanical - Height Class = 25mm to 30mm Class
- Height (mm [in]) = 27.90 [1.098]
- Insulation - Clearance Between Contact and Coil (mm [in]) = 3.18 [0.125]
- Insulation - Creepage Between Contact and Coil (mm [in]) = 6.36 [0.25]

- RoHS/ELV Compliance History = Converted to comply with RoHS not ELV directives
- Approved/Registered Standards = UL, CSA

Environmental:

- Environmental - Category of Protection = RTI
- Environmental - Ambient Temperature, Max. (°C [°F]) = 85 [185]
- Environmental - Ambient Temperature Class = 70°C to 85°C Class

Packaging Features:

- Packaging Method = Tray

Other:

- Series = T9A
- Brand = Potter & Brumfield



© 2013 TE Connectivity Ltd. family of companies. All Rights Reserved

T9A Series, DC Coil 30A PCB or Panel Mount Relay

- **30A switching in 1 form A (NO) and 20A in 1 form C (CO)**
- **Plastic sealed case available**
- **Meets UL 508 and 873 spacing - 3.18mm through air, 6.36mm over surface**
- **Option for load connections via 0.250"" (6.35mm) Q.C. terminals**
- **UL class F insulation system standard**

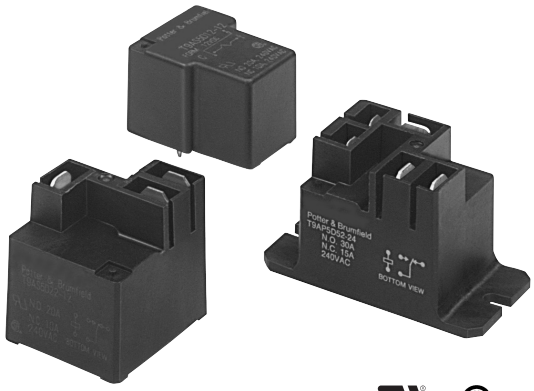

Typical applications
HVAC, Appliances, Industrial Controls

Approvals

UL E58304; CSA LR48471
Technical data of approved types on request

Contact Data

Contact arrangement	1 form A (NO), 1 form B (NC), 1 form C (CO)		
Rated voltage	277VAC		
Max. switching voltage	277VAC		
Rated current	30A	15A	20A/10A
Limiting continuous current	30A		
Contact material	AgSnOInO, AgCdO		
Min. recommended contact load	1A, 5VDC or 12VAC		
Initial contact resistance	75 mΩ at 1A at 5VDC or 12VAC		
Frequency of operation, with/without load	360/3600hr		
Operate/release time max., including bounce	15/15ms		

Contact ratings [1]

Type	Load	Cycles
Factory		
AgCdO, 1W coil		
NO	30A, 240VAC, general purpose	$100x10^3$
NO	25A, 240VAC, resistive	$100x10^3$
CO	20A/10A, 240VAC, general purpose	$100x10^3$
CO	20A/10A, 240VAC, resistive	$100x10^3$
CO	20A/10A, 28VDC, resistive	$100x10^3$
UL 508/873		
AgCdO, 1W coil		
NO	30A, 240VAC, general purpose	$100x10^3$
NC	15A, 240VAC, general purpose	$100x10^3$
CO	20A/10A, 240VAC, general purpose	$100x10^3$
NO	25A, 240VAC, resistive	$6x10^3$
NC	20A, 240VAC, resistive	$6x10^3$
CO	16.75A/13.4A, 240VAC, resistive	$6x10^3$
NO	80LRA/30FLA, 240VAC	$30x10^3$
NC	30LRA/12FLA, 240VAC	$30x10^3$
CO	53.6LRA/20FLA / 20LRA/8FLA, 240VAC	$30x10^3$
NO	98LRA/22FLA, 120VAC	$100x10^3$
NO	2HP, 240VAC	$1x10^3$
NC	1/2HP, 240VAC	$1x10^3$
NO	1HP, 125VAC	$1x10^3$
NC	1/4HP, 125VAC	$1x10^3$
NO	10A, 277VAC, ballast	$6x10^3$
NC	3A, 277VAC, ballast	$6x10^3$
NO	8.3A, 120VAC, tungsten	$6x10^3$
NO	5.4A, 277VAC, tungsten	$6x10^3$
NO	470VA, 120VAC, pilot duty	$30x10^3$
NO	20A, 28VDC, resistive	$100x10^3$
NC	10A, 28VDC, resistive	$100x10^3$
AgCdO - Enhanced Version Only, 1W coil		
NO	21A, 250VAC, resistive	$250x10^3$
NO	25A, 277VAC, resistive	$100x10^3$

1) Contact ratings at 25°C (unless otherwise noted) with relay properly vented. Remove vent nib after soldering and cleaning.

Contact ratings [1] (continued)

Type	Load	Cycles
UL 508/873		
AgSnOInO, 1W coil		
NO	30A, 240VAC, general purpose	$100x10^3$
NO	80LRA/30FLA, 240VAC	$30x10^3$
NC	10A, 250VAC, resistive	$50x10^3$
AgCdO, 900mW coil		
NO	30A, 240VAC, general purpose	$100x10^3$
NO	18A, 240VAC, resistive, 105°C	$100x10^3$
NC	15A, 240VAC, resistive	$6x10^3$
NO	30LRA/15FLA, 240VAC	$100x10^3$
NO	50LRA/16FLA, 120VAC	$100x10^3$
NO	30LRA/11FLA, 120VAC	$200x10^3$

1) Contact ratings at 25°C (unless otherwise noteed) with relay properly vented. Remove vent nib after soldering and cleaning.

Mechanical endurance	$10x10^6$ ops.

Coil Data

Coil voltage range	5 to 110VDC
Max. coil power	110% of nominal
Max. coil temperature	155°C
Coil insulation system according UL	Class F

Coil versions, DC coil

Coil code	Rated voltage VDC	Operate voltage VDC	Release voltage VDC	Coil resistance Ω±10%	Rated coil power W
Code D (1W) coil					
5	5	3.75	0.5	25	1
6	6	4.5	0.6	36	1
9	9	6.75	0.9	81	1
12	12	9	1.2	144	1
15	15	11.25	1.5	225	1
18	18	13.5	1.8	324	1
24	24	18	2.4	576	1
48	48	36	4.8	2304	1
110	110	82.5	11	12100	1
Code L (900W) coil					
5	5	3.75	0.5	27	.9
6	6	4.5	0.6	40	.9
9	9	6.75	0.9	97	.9
12	12	9	1.2	155	.9
15	15	11.25	1.5	256	.9
18	18	13.5	1.8	380	.9
24	24	18	2.4	660	.9
48	48	36	4.8	2560	.9
110	110	82.5	11	13450	.9

All figures are given for coil without preenergization, at ambient temperature +23°C.

08-2012, Rev. 0812
www.te.com
© 2012 Tyco Electronics Corporation,
a TE Connectivity Ltd. company

Datasheets and product specification according to IEC 61810-1 and to be used only together with the 'Definitions' section.

Datasheets and product data is subject to the terms of the disclaimer and all chapters of the 'Definitions' section, available at http://relays.te.com/definitions

Datasheets, product data, 'Definitions' section, application notes and all specifications are subject to change.

T9A Series, DC Coil 30A PCB or Panel Mount Relay (Continued)

Coil Data (continued)

Ambient temperature vs. coil voltage – 1W coil

Data below are average values and should be verified in application. Tests were conducted within a 2' (.6 m) cube (still air); at nominal coil power @ 25°C; with normally open contact loaded; and with 4' (1.22 m) long, #10 AWG load wires. P.C. board relays were mounted to a 30A, single side P.C. board. Coil rise test conducted with a 30A PC board to maintain 20°C max. rize at 30°C. The relay connections and wiring must be designed with an adequate cross section to ensure proper current flow and heat dissipation.

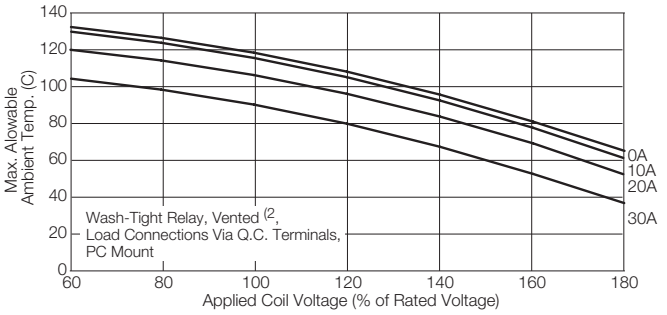

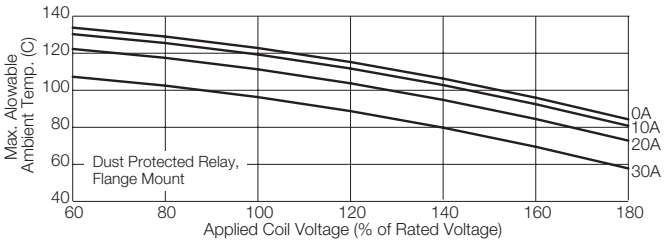

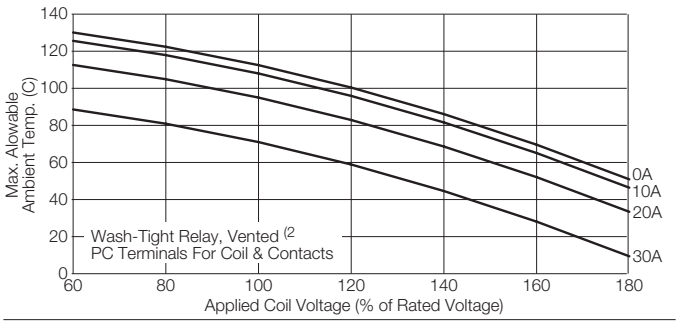

2) Remove knock-off nib after cleaning process for optimum life of wash-tight relays.

Insulation Data

Initial dielectric strength	
between open contacts	1500V$_{rms}$
between contact and coil	2500V$_{rms}$
Initial surge withstand voltage	
between contact and coil	6kV
Initial insulation resistance	
between insulated elements	1x10^{9}Ω
Clearance/creepage	
between contact and coil	3.18mm clearance/6.3638mm

Other Data

Material compliance:	EU RoHS/ELV, China RoHS, REACH, Halogen content refer to the Product Compliance Support Center at www.te.com/customersupport/rohssupportcenter
Ambient temperature	
DC coil	-55ºC to 85ºC 3) 105°C models available
Category of environmental protection	
IEC 61810	RT0 - open, RTI - dust protected, RTII - flux proof, RTIII - wash tight
Vibration resistance (functional)	1.65mm max excursions, 10-55 Hz
Shock resistance (functional)	10g for 11msec
Shock resistance (destructive)	100g
Terminal type	pcb-tht and pcb-tht + quick connect
Weight	26g mounting code 1 33g mounting codes 2 and 5
Resistance to soldering heat THT	
IEC 60068-2-20	250°C
Packaging/unit	tray/50 pcs., bundle/250 pcs., box/500 pcs.

3) Operating ambient temperature must consider "Must Operate Voltage Change Over Temperature," Contact Temperature Rise, Coil Temperature Rise (If coil is not allowed to cool) and Maximum Coil Temperature. Specification ambient considers 20A load with coil cooled to ambient.

Dimensions

T9AS – Mounting and termination code 2

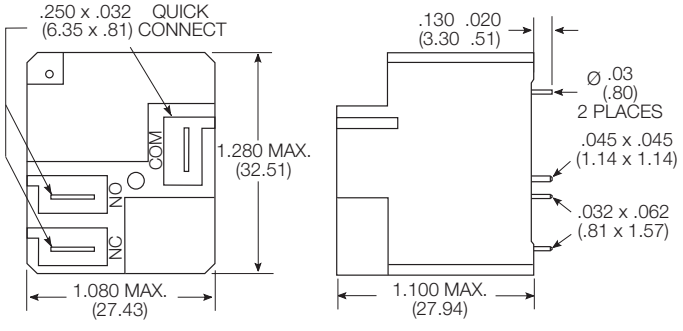

T9AP – Mounting and termination code 5

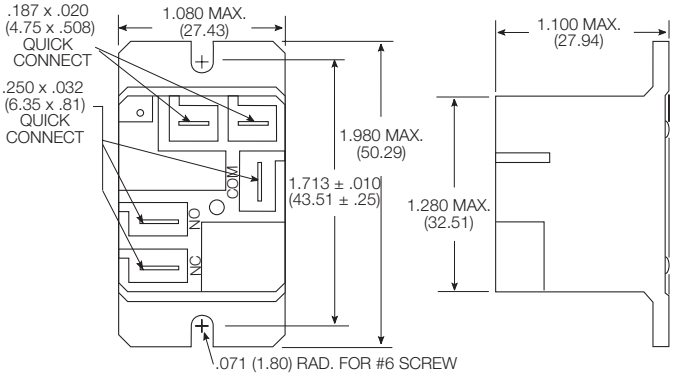

Note: Recommended mounting screw torque is 4.0-5.0 lbs.in when #6 screw is used.

08-2012, Rev. 0812
www.te.com
© 2012 Tyco Electronics Corporation,
a TE Connectivity Ltd. company

Datasheets and product specification according to IEC 61810-1 and to be used only together with the 'Definitions' section.

Datasheets and product data is subject to the terms of the disclaimer and all chapters of the 'Definitions' section, available at http://relays.te.com/definitions

Datasheets, product data, 'Definitions' section, application notes and all specifications are subject to change.

T9A Series, DC Coil 30A PCB or Panel Mount Relay (Continued)

Dimensions

Plain case

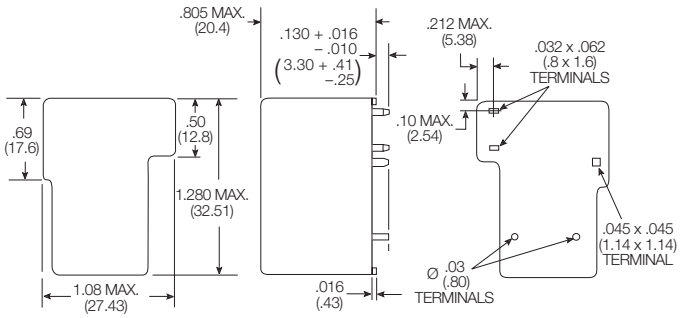

Bracket mount case

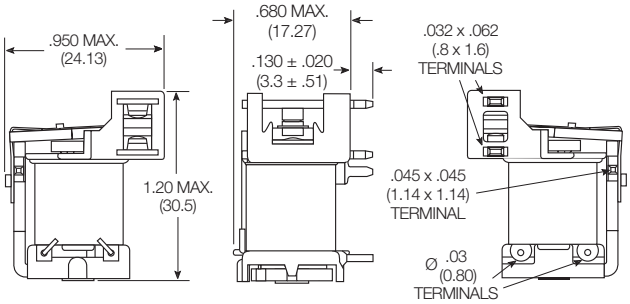

Terminal assignment

Bottom view on pins

1 Form A

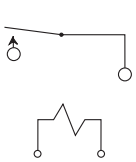

1 Form B

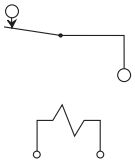

1 Form C

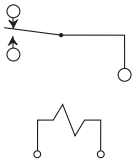

PCB layout

Bottom view on pins

T9AP/S - Mounting and termination code 2

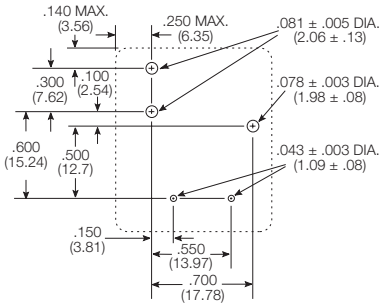

Only necessary terminals are present on single throw models. Consequently, some holes will be unnecessary for single throw models.

T9AS/V - Mounting and termination code 1

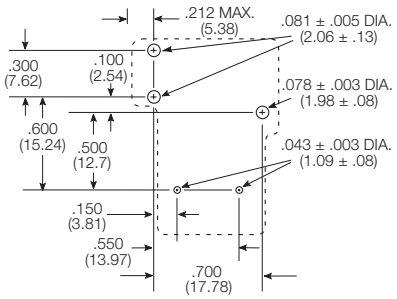

Only necessary terminals are present on single throw models. Consequently, some holes will be unnecessary for single throw models.

Product code structure

Typical product code	T9A	S	5	D	2	2	-12

Type
- **T9A** Power PCB or panel mount relay T9A

Enclosure
- **N** Open, no enclosure (requires mounting code 1)
- **P** Dust protected plastic case (requires mounting code 5)
- **S** Wash-tight plastic case with knock off nib (requires mounting code 1 or 2)
- **V** Flux-proof plastic case (requires mounting code 1 or 2)

Contact arrangement
- **1** 1 form A (1 NO)
- **2** 1 form B (1 NC)
- **5** 1 form C (1 CO)

Coil Input
- **D** DC voltage, 1W
- **L** DC voltage, 900mW

Mounting and termination
- **1** PCB mounting; PCB terminals for coil and contacts (only available with enclosure code N, S or V)
- **2** PCB mounting; PCB term. for coil and contacts; 6.35mm (.250in) QC for contacts (only available with enclosure code S or V)
- **5** Flanged mounting; 4.75mm (.187) QC for coil; 6.35mm (.250in) QC for contacts (only available with enclosure code P)

Contact material
- **2** AgCdO
- **4** AgSnOInO
- **7** AgCdO (Enhanced version)

Coil voltage

Coil code: please refer to coil versions table

08-2012, Rev. 0812
www.te.com
© 2012 Tyco Electronics Corporation,
a TE Connectivity Ltd. company

Datasheets and product specification according to IEC 61810-1 and to be used only together with the 'Definitions' section.

Datasheets and product data is subject to the terms of the disclaimer and all chapters of the 'Definitions' section, available at http://relays.te.com/definitions

Datasheets, product data, 'Definitions' section, application notes and all specifications are subject to change.

T9A Series, DC Coil 30A PCB or Panel Mount Relay (Continued)

Product Code	Enclosure	Contacts	Coil	Mounting	Contact Material	Coil	Part Number
T9AN1L22-24	Open (no cover)	1 form A, 1 NO	900mW	pcb + QC	AgCdO	24VDC	1419104-6
T9AN5L12-24		1 form C, 1 CO		pcb terminals			1-1393210-0
T9AN5L22-24				pcb + QC			1419104-9
T9AP1D52-12	Unsealed, plastic dust cover	1 form A, 1 NO	1W	Flanged mount, QC		12VDC	6-1419102-0
T9AP1D52-24						24VDC	6-1419102-3
T9AP1D52-48						48VDC	5-1419102-8
T9AP1D54-24					AgSnOInO	24VDC	7-1423091-3
T9AP5D52-12		1 form C, 1 CO			AgCdO	12VDC	5-1419102-4
T9AP5D52-24						24VDC	5-1419102-2
T9AP5D52-48						48VDC	6-1419102-4
T9AP5D54-12					AgSnOInO	12VDC	7-1423091-4
T9AP5D54-24						24VDC	7-1423091-5
T9AS1D12-5	Wash tight, knock off nib	1 form A, 1 NO		pcb terminals	AgCdO	5VDC	2-1393210-0
T9AS1D12-9						9VDC	2-1393210-2
T9AS1D12-12						12VDC	1-1393210-3
T9AS1D12-15						15VDC	1-1393210-4
T9AS1D12-18						18VDC	1-1393210-5
T9AS1D12-24						24VDC	1-1393210-8
T9AS1D12-48						48VDC	1-1393210-9
T9AS1D12-110						110VDC	1-1393210-2
T9AS1D14-12					AgSnOInO	12VDC	5-1423091-7
T9AS1D14-24						24VDC	6-1423091-3
T9AS1D17-12					AgCdO Enhanced	12VDC	1423029-5
T9AS1D17-24						24VDC	1423029-6
T9AS1D22-5				pcb + QC	AgCdO	5VDC	2-1419104-3
T9AS1D22-12						12VDC	1-1419104-7
T9AS1D22-24						24VDC	2-1419104-1
T9AS1D22-48						48VDC	2-1419104-2
T9AS1D22-110						110VDC	1-1419104-6
T9AS1D27-12					AgCdO Enhanced	12VDC	2071229-4
T9AS1D27-24						24VDC	2071229-4
T9AS1L12-12			900mW	pcb terminals	AgCdO	12VDC	2-1393210-4
T9AS1L12-24						24VDC	2-1393210-5
T9AS1L22-18				pcb + QC		18VDC	2-1419104-6
T9AS2L22-24		1 form B, 1 NC				24VDC	1423794-1
T9AS5D12-5		1 form C, 1 CO	1W	pcb terminals		5VDC	3-1393210-9
T9AS5D12-12						12VDC	3-1393210-3
T9AS5D12-18						18VDC	3-1393210-4
T9AS5D12-24						24VDC	3-1393210-7
T9AS5D12-48						48VDC	3-1393210-8
T9AS5D12-110						110VDC	3-1393210-2
T9AS5D14-5					AgSnOInO	5VDC	6-1423091-4
T9AS5D22-5				pcb + QC	AgCdO		3-1419104-9
T9AS5D22-12						12VDC	3-1419104-3
T9AS5D22-24						24VDC	3-1419104-6
T9AS5D22-110						110VDC	3-1419104-2
T9AS5D24-5					AgSnOInO	5VDC	6-1423091-9
T9AS5D24-12						12VDC	7-1423091-0
T9AS5D24-24						24VDC	7-1423091-1
T9AS5L12-12			900mW	pcb terminals	AgCdO	12VDC	4-1393210-1
T9AS5L22-18				pcb + QC		18VDC	4-1419104-0
T9AS5L22-24						24VDC	4-1419104-1
T9AS5L22-48						48VDC	9-1419136-6
T9AV1D12-12	Vented, flux tight	1 form A, 1 NO	1W	pcb terminals		12VDC	4-1393210-3
T9AV1D12-18						18VDC	5-1393210-2
T9AV1D22-18				pcb + QC			4-1419148-8
T9AV1D22-24						24VDC	5-1419148-0
T9AV1D22-48						48VDC	2-1423091-3
T9AV1L12-12			900mW	pcb terminals		12VDC	1-1423091-8
T9AV1L22-24				pcb + QC		24VDC	4-1419104-2
T9AV2D22-24		1 form B, 1NC	1W				1419137-1
T9AV5D12-24		1 form C, 1CO		pcb terminals			4-1393210-8
T9AV5D22-18				pcb + QC		18VDC	5-1419148-2
T9AV5D22-24						24VDC	1419137-2
T9AV5L12-12			900mW	pcb terminals		12VDC	1423091-6

08-2012, Rev. 0812
www.te.com
© 2012 Tyco Electronics Corporation,
a TE Connectivity Ltd. company

Datasheets and product specification according to IEC 61810-1 and to be used only together with the 'Definitions' section.

Datasheets and product data is subject to the terms of the disclaimer and all chapters of the 'Definitions' section, available at http://relays.te.com/definitions

Datasheets, product data, 'Definitions' section, application notes and all specifications are subject to change.