TCL
SERVICE MANUAL

C48P1FS/MT56CT-AP

1. Caution……
2. specification……
3. Alignment Procedure……
4. Block diagram……
5. Scheme Diagram ……
6. Troubleshooting……
7. Explode drawing.....

This manual is the latest at the time of printing, and does not include the modification which may be made after the printing, by the constant improvement of product

1. CAUTION

CAUTION:
Use of controls, adjustments or procedures other than those specified herein may result in hazardous radiation exposure.

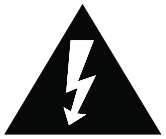





CAUTION: TO REDUCE THE RISK OF ELECTRICAL SHOCK, DO NOT REMOVE COVER (OR BACK). NO USER SERVICEABLE PARTS INSIDE. REFER SERVICING TO QUALIFIED SERVICE PERSONNEL.

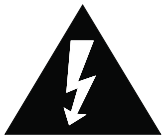

The lighting flash with arrowhead symbol, with an equilateral triangle is intended to alert the user to the presence of uninsulated "dangerous voltage" within the product's enclosure that may be of sufficient magnitude to constitute a risk of electric shock to the person.



The exclamation point within an equilateral triangle is intended to alert the user to the presence of important operating and maintenance (servicing) instructions in the literature accompanying the appliance.

WARNING: TO REDUCE RISK OF FIRE OR ELECTRIC SHOCK, DO NOT EXPOSE THIS APPLIANCE TO RAIN OR MOISTURE.

IMPORTANT SAFETY INSTRUCTIONS

CAUTION:

Read all of these instructions. Save these instructions for later use. Follow all Warnings and Instructions marked on the audio equipment.

1. Read Instructions- All the safety and operating instructions should be read before the product is operated.
2. Retain Instructions- The safety and operating instructions should be retained for future reference.
3. Heed Warnings- All warnings on the product and in the operating instructions should be adhered to.
4. Follow Instructions- All operating and use instructions should be followed.

FOR YOUR PERSONAL SAFETY

1. When the power cord or plug is damaged or frayed, unplug this television set from the wall outlet and refer servicing to qualified service personnel.
2. Do not overload wall outlets and extension cords as this can result in fire or electric shock.
3. Do not allow anything to rest on or roll over the power cord, and do not place the TV where power cord is subject to traffic or abuse. This may result in a shock or fire hazard.
4. Do not attempt to service this television set yourself as opening or removing covers may expose you to dangerous voltage or other hazards. Refer all servicing to qualified service personnel.
5. Never push objects of any kind into this television set through cabinet slots as they may touch dangerous voltage points or short out parts that could result in a fire or electric shock. Never spill liquid of any kind on the television set.
6. If the television set has been dropped or the cabinet has been damaged, unplug this television set from the wall outlet and refer servicing to qualified service personnel.
7. If liquid has been spilled into the television set, unplug this television set from the wall outlet and refer servicing to qualified service personnel.
8. Do not subject your television set to impact of any kind. Be particularly careful not to damage the picture tube surface.
9. Unplug this television set from the wall outlet before cleaning. Do not use liquid cleaners or aerosol cleaners. Use a damp cloth for cleaning.

10.1. Do not place this television set on an unstable cart, stand, or table. The television set may fall, causing serious injury to a child or an adult, and serious damage to the appliance. Use only with a cart or stand recommended by the manufacturer, or sold with the television set. Wall or shelf mounting should follow the manufacturer's instructions, and should use a mounting kit approved by the manufacturer.

10.2. An appliance and cart combination should be moved with care. Quick stops, excessive force, and uneven surfaces may cause the appliance and cart combination to overturn.



PROTECTION AND LOCATION OF YOUR SET

11. • Do not use this television set near water ... for example, near a bathtub, washbowl, kitchen sink, or laundry tub, in a wet basement, or near a swimming pool, etc.
    • Never expose the set to rain or water. If the set has been exposed to rain or water, unplug the set from the wall outlet and refer servicing to qualified service personnel.

12. Choose a place where light (artificial or sunlight) does not shine directly on the screen.

13. Avoid dusty places, since piling up of dust inside TV chassis may cause failure of the set when high humidity persists.

14. The set has slots, or openings in the cabinet for ventilation purposes, to provide reliable operation of the receiver, to protect it from overheating. These openings must not be blocked or covered.
    • Never cover the slots or openings with cloth or other material.
    • Never block the bottom ventilation slots of the set by placing it on a bed, sofa, rug, etc.
    • Never place the set near or over a radiator or heat register.
    • Never place the set in a "built-in" enclosure, unless proper ventilation is provided.

PROTECTION AND LOCATION OF YOUR SET

15.1. If an outside antenna is connected to the television set, be sure the antenna system is grounded so as to provide some protection against voltage surges and built up static charges, Section 810 of the National Electrical Code, NFPA No. 70-1975, provides information with respect to proper grounding of the mast and supporting structure, grounding of the lead-in wire to an antenna discharge unit, size of grounding conductors, location of antenna discharge unit, connection to grounding electrode, and requirements for the grounding electrode.

EXAMPLE OF ANTENNA GROUNDING AS PER NATIONAL ELECTRICAL CODE INSTRUCTIONS

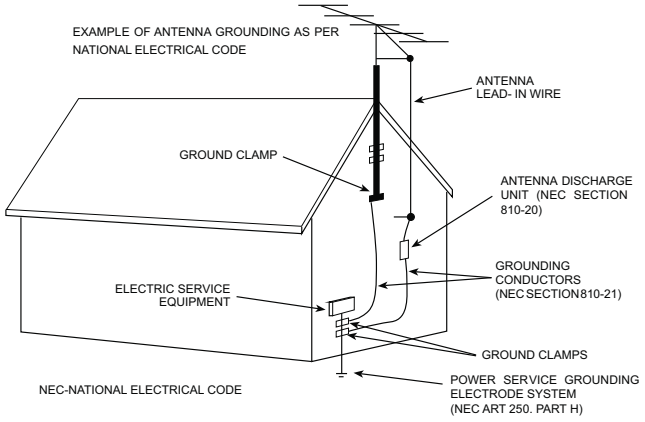

15.2. Note to CATV system installer : (Only for the television set with CATV reception)

This reminder is provided to call the CATV system installer's attention to Article 820-40 of the NEC that provides guidelines for proper grounding and, in particular, specifies that the cable ground shall be connected to the grounding system of the building, as close to the point of cable entry as practical.

16. An outside antenna system should not be located in the vicinity of overhead power lines or other electric lights or power circuits, or where it can fall into such power lines or circuits. When installing an outside antenna system, extreme care should be taken to keep from touching such power lines or circuits as contact with them might be fatal.

17. For added protection for this television set during a lightning storm, or when it is left unattended and unused for long periods of time, unplug it from the wall outlet and disconnect the antenna. This will prevent damage due to lightning and power-line surges.

OPERATION OF YOUR SET

18. This television set should be operated only from the type of power source indicated on the marking label. If you are not sure of the type of power supply at your home, consult your television dealer or local power company. For television sets designed to operate from battery power, refer to the operating instructions.
19. If the television set does not operate normally by following the operating instructions, unplug this television set from the wall outlet and refer servicing to qualified service personnel. Adjust only those controls that are covered in the operating instructions as improper adjustment of other controls may result in damage and will often require extensive work by a qualified technician to restore the television set to normal operation.
20. When going on a holiday : If your television set is to remain unused for a period of time, for instance, when you go on a holiday, turn the television set "off" and unplug the television set from the wall outlet.

IF THE SET DOES NOT OPERATE PROPERLY

21. If you are unable to restore normal operation by following the detailed procedure in your operating instructions, do not attempt any further adjustment. Unplug the set and call your dealer or service technician.
22. Whenever the television set is damaged or fails, or a distinct change in performance indicates a need for service, unplug the set and have it checked by a professional service technician.
23. It is normal for some TV sets to make occasional snapping or popping sounds, particularly when being turned on or off. If the snapping or popping is continuous or frequent, unplug the set and consult your dealer or service technician.

FOR SERVICE AND MODIFICATION

24. Do not use attachments not recommended by the television set manufacturer as they may cause hazards.
25. When replacement parts are required, be sure the service technician has used replacement parts specified by the manufacturer that have the same characteristics as the original part. Unauthorized substitutions may result in fire, electric shock, or other hazards.
26. Upon completion of any service or repairs to the television set, ask the service technician to perform routine safety checks to determine that the television is in safe operating condition.

PRODUCT SPECIFICATION RELEASE

Model: C48P1FS/MT56CT-AP/LVF480ND1L SJ9W01

Version：1.0 Issued On: 2015-12-28

Basic Information

Product Type	LED 2D FHD Android Smart DTV
Chassis	MT56CT-AP
CPU	Quad Core A7 1GHz
GPU	Dual Core MALI450MP2 400MHz
OS	Android 4.4
Memory/Flash	6Gb DDR3 / 4GB Flash
UI Style	Zing TV+
Launcher HomePages Show	Home、Videos 、TV、APPS
OSD Language	English、Vietnamese etc.
TV System	PAL B/G、D/K、I；NTSC-M； DVB-T/T2/C
AV System	PAL、NTSC
Channels	0000-9999
Power Supply	AC 100V-240V 50/60Hz
Power Consumption（TV On）	115W
Power Consumption（Standby）	≤0.5W
Certification	CB
ECO Energy efficiency	Yes
Internet Link	wireless WiFi Default Ethernet Network
LED Indicator Status	In The Center of Front,White in Standby

Basic Function

Initial Setup	Yes，for user setting in TV first starting
HDMI Auto Switch	Auto、Close、Manual
Channels Edit	For Channel renamed
Input Settings	For Input source device choice
Sleep Timer	Yes
System Update	Yes
T-Link（CEC）	Yes
Input Method	Smart TV IME
MHL	Yes
Teletext	Yes
Audio Language/Nicam	Yes
PVR/Timeshift	Yes （Only for DTV Programme）
Programme Schedule	Record/Reminder（Only for DTV Programme）
EPG	Yes（Only for DTV Programme）
Subtitle	Yes（Only for DTV Programme）

Picture

Picture Mode	Standard\Dynamic\Natural\Movie\Personal
Screen Mode	16:9\4:3\14:9\Cinerame\Zoom etc.
Noise Reduction	Low\Middle\High\Auto\Off
Backlight Adjustable	Yes (0~100)
Color Temperature	Normal/Warm/Cool/Customer
Gamma Adjustable	-4 to 4
Dynamic Contrast	Yes
Overscan	Yes
Picture Freeze	Yes
Game Mode	Yes
Film Mode	Yes
Picture Reset	Yes

Sound

Speakers	Integrated speakers (Bottom side)
Audio Power Output（THD=7%）	2×8W
Auto Volume Control	On / Off
Sound Preset	Standard\Music\Movie\Clear Voice\Personal
Sound Control	Five band equalizer adjust in Personal mode
TV Placement	Desk top / Wall mount
Audio Delay	Yes
Sound Bluetooth	Yes,for External Bluetooth speaker/soundbar

USB Device Media Format

Music	MP3
Picture	JPEG/BMP/PNG/GIF
Mutilmedia Video/Audio Decoder	MPEG-(1/2/4)/H.264/H.263/DivX Dolby/AC3

Signal Format Capability

DVI Video Format	Up to XGA for HDMI-PC
HDMI Video Format	up to 1080P
PC Compatibility	Up to SXGA

Panel Specification

Backlight Unit	LED
Panel supplier	SAMSUNG
Aspect Ratio	16:9
Panel Active Size (inch)	48
Display Resolution	1920*1080
Brightness (cd/m2)	280(type.)
Contrast Ratio	4000:1
Response Time (G to G)	8ms
Viewing Angle (H/V)	178°/178°
Life Time(Typ.)	30,000hrs
Color	1.07B (Dithered 10bit)
Refresh Rate	60Hz

Terminals



Design and specifications are subject to change without notice!

Pre-Installed Application List

YouTube	Push Popular VOD posters to Homepage
Golive 3.0	Lots of Global Live TV channels show
Miracast	Wireless Mirroring connecting,to deliver audio and video content from smartphone to TV
App Store 3.3	Special App Store available for download
Browser	Webpage Browser
TV Tweets	a Social App
Deezer	Global Online Music Streaming service
Mediacenter	Media/Music play for USB Device
Message Box	Messages push
Weather forecast	Showed in Homepage
E-Sticker	as some function demo in Shop mode
E-Manual	Some general basic function introduction
nScreen	Connect Mobile phone to TV sets and control the TV like Remote using Phone; Push media file in Phone to TV Display and Enjoy big screen picture quality.

Essential Accessories（Default）

Operation Manual	English(Default)
Remote Control and batteries	RC311(with two batteries)
Base Stand	Integrated Packaging
AC power cord	1 pcs



Mechanical ID Picture

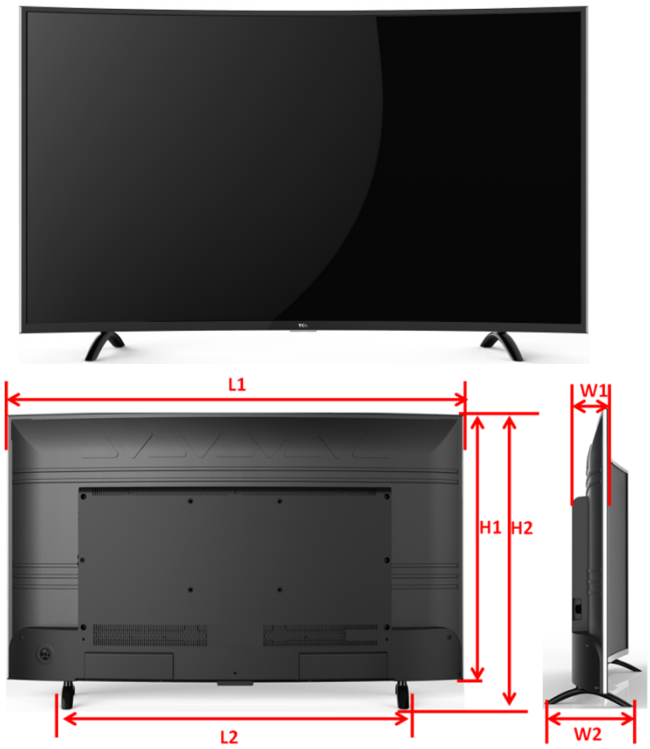

Mechanical Key Specification

L1（mm）	1082.9	Diagonal size（cm）	121
W1（mm）	77.6	Slim Edge Design---Up（mm）	12.2
H1（mm）	631.3	Slim Edge Design---Bottom（mm）	20.9
L2（mm）	822.7	Slim Edge Design---L&R（mm）	15
W2（mm）	212.5	Carton Dimensions LxWxH（mm）	1220*210*806
H2（mm）	675.2	Container Loading---20 feet（pcs）	96
Net Weight With Stand（Kg）	11	Container Loading---40 feet（pcs）	206
Net Weight Without Stand（Kg）	10.8	Container Loading--40 feet High（pcs）	309
Gross Weight With Packaging（Kg）	15	VESA Mounting Dimensions LxH（mm）	200x200

Drafted by: Approved by:

TCL World-Wide R&D

FPD CENTER

Factory Test & Alignment Specification V1.0

----MT56-AP

PREPARED BY : FENG LIU DATE : 2015-02-13

APPROVED BY: _____ DATE : _____

Content

1. General Description 3
2. Factory Menu 5
2.1 Accessing Way 5
2.2 Factory Menu 6
2.3 White Balance Menu 7
3. Design Menu 7
3.1 Accessing Way 8
3.2 Design Menu 8
3.3 Other Menu 9
3.4 Service Menu 9
3.5 Param Setting Menu 10
4. Test & Alignment 11
4.1 Pre-Conditions and Power Supply Check 11
4.2 Project ID Modification 11
4.3 Function Test 12
4.4 LAN/WLAN Test 13
4.5 SHOP INIT 13
Appendix 14
Appendix 1: Warm-up Test 14
Appendix 2: Software Upgrade 15
Appendix 3: Network Connection 17
Appendix 4: White Balance (WB) Adjustment 18

1. General Description

The information contained in this document is proprietary to TCL SZ FPD lab and shall not be disclosed by the recipient to the third person without the written permission of the team leader or GM of R&D.

MT56-AP chassis are designed for Asia & Pacific (AP) market Ready for Smart TV. It features by its high integration, easy debugging (ADC adjustment free) as well as convenience in terms of maintenance. Fast software upgrade through USB disk facilitates both manufacture and after-sale service. Meantime, a variety of functions involved in Factory Main Menu can not only bring benefits for production, but also satisfy various demands of customers.

Note: Factory Main Menu (FMM) is divided into Factory menu and Design menu. Factory Menu covers all indispensable functions during manufacture such as White Balance Adjustment, SHOP etc., while Design Menu includes Service Menu, Hotel Menu, Param Setting, Other Setting etc. Some settings like Param Setting and Other Setting is exclusively used by R&D engineer, anyone else shouldn't change the settings in the menu. When you wish to learn the product information like project ID, project name, Hardware, software version, release date, you can access to Service Menu. In addition, in Hotel Menu, we also provide a great deal of useful functions for specific applications in hotel.

The main chip is from REALTEK and supports below features matrix:

Class	Item	MT56-AP
Input & Output	**RF Input** (PAL/DVB/DVB-T2)	CABLE&ANTENNA
	HDMI (480i/p, 576i/p, 720p up to 1080i/p, with HDCP)	HDMI*3
	VGA	1
	VGA Audio	Shares audio sockets with Audio Input
	Component Audio Input	RCA*2 (L+R)
	AV Input	RCA*1

Input & Output	**Audio Out**	RCA*2
	USB (Video, audio and picture)	USB2.0*2
	MHL	Shares with HDMI 1
	PCMCIA	1
	SPDIF output	RCA*1
	NETWORK	RJ45 Socket
Functions	**Internet**	✓
	WIFI	✓
Others	**Serial connector**	Multiplexing VGA
IC Details & Position	**Main program**	UF01 (Support online upgrade)
	Mboot	UF01 (Support online upgrade)
	EEPROM	U702

Note:

- The software boot for U702 can be programed by Flash Tool.exe.
- Every set has its unique HDCP key which is purchased from suppliers or HDCP certification authority. Please check HDCP function in the process of production.
- Once in a while, the software of main board may be upgraded. Please pay attention to use the latest software before production.

2. Factory Menu

Factory Menu is mainly used for factory production and satisfies various demands of customers. It covers all indispensable functions during manufacture such as **Warm up**, **White Balance**, **Shop**, **NVM Reset**, **Power on mode, USB Clone** etc.

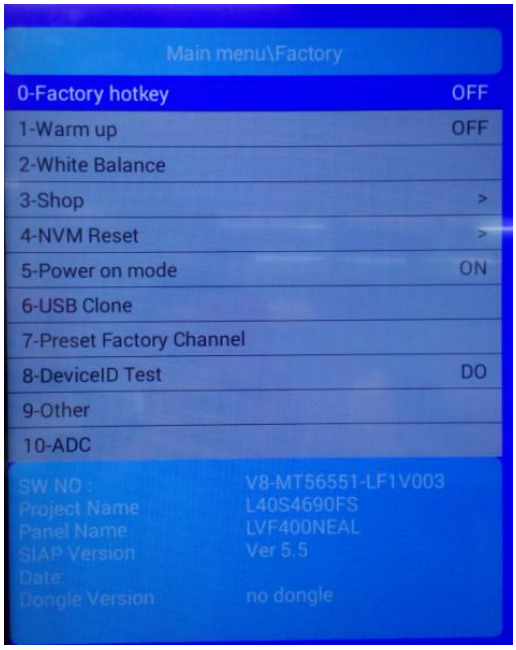

2.1 Accessing Way

a. When the **Factory hotkey** item of Factory Menu is disabled (**OFF**), press **Menu** button of remote control, then select **Settings/Picture,** make sure the cursor stop on **Contrast** item submenu. Finally, press **9**, **7**, **3**, **5** consecutively.

b. When the **Factory hotkey** item of Factory Menu is enabled (**ON,** you can see the flashing **Factory Captions Info** on the lower left corner), press **Back** button of remote control.

Press RCU "**OK**" key to enter the submenu.
Press RCU "**Right**" or "**Left**" key to change the values.
Press RCU "**Right**" or "**Left**" key run the function.
Press RCU "**Back**" or "**Menu**" key exit the Factory menu.

Factory Captions Info:

While "**FactoryKey**" is enabled, there is some toggled display information relative to **MV**, **SV, ID, MID**, to facilitate 100% quick screening without accessing to whatever else menu:

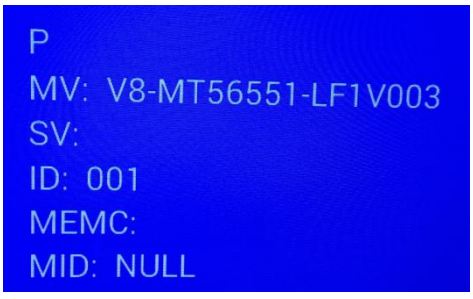

- ➔ **P** (Production/Factory mode flag)
- ➔ **MV** (Mboot SW Version)
- ➔ **SV** (Main SW Version)
- ➔ **ID** (Project ID)
- ➔ **MEMC**

➔ **MID**

2.2 Factory Menu

Factory Menu		
Name	**Default**	**Description**
Factory hotkey	**OFF**	Factory Menu shortcut button switch The item must be disabled (OFF) after production
Warm up	**OFF**	Aging mode, mainly used for factory aging. Press "**Menu**" key on keyboard to exit the burning mode. See Appendix 1 "Warm-up Test"
White Balance	**..**	White Balance Adjustment (see details below)
Shop	**>**	It is crucial that the function is executed after production aim to clear information of production process, ensure user cannot access to Factory Menu after executing the item.
NVM Reset	**>**	Restore default value except White Balance, ADC data.
Power On Mode	**STANDBY**	ON: the set will power on after switching on power. STANDBY: the set will remain standby status after switching on power. LAST: the set will turn to the status in which it lies when last switching off. If without requirement from certain customer, by default, the Setting should be STANDBY
USB Clone	**..**	Select to choose the things you want to clone.
Preset Factory Channel	**..**	Preset the channel table of factory. To preset the channel table of certain factory, first, choose the corresponding factory name. Then press **OK** button of remote control and wait OK is displayed on the screen.
DeviceID test	**DO**	Test device ID.
Other		Project Information
ADC	**..**	Analog To Digital Converter
SW NO.	**device info**	Version information of Main Software
Project Name	**device info**	Product model
Date	**device info**	Release date and time of main software

2.3 White Balance Menu

Press the ▲ ▼ button on remote control to select certain item and OK to adjust White Balance**.**

White Balance		
Name	**Default**	**Description**
Source	**ATV**	Press RCU **left/right** key to change the TV source.
Color	**normal**	Select color temperature you intend to adjust Three groups of color temperature: normal, Cold, Warm are available.
R gain	**0-255**	Gain of R channel (cannot be changed after auto calibration)
G gain	**0-255**	Gain of G channel (cannot be changed after auto calibration)
B gain	**0-255**	Gain of B channel (cannot be changed after auto calibration)
R offset	**128**	Disabled, keep the default value
G offset	**128**	Disabled, keep the default value
B offset	**128**	Disabled, keep the default value
White Balance init	**>**	White Balance Initalization. Before WB adjustment, this item should be executed.

3. Design Menu

Design Menu includes **Factory Menu, other, Service Menu**, **Param Setting, Hotel Menu**. Some settings like **Param Setting** and **Other** Menu is exclusively used by R&D engineer, anyone else shouldn't change the settings in the menu. When you wish to learn the product information like project ID, project name, chassis name, software version, release date, you can access to Service Menu. In addition, in **Hotel Menu**, we also provide a great deal of useful functions for specific applications in hotel.

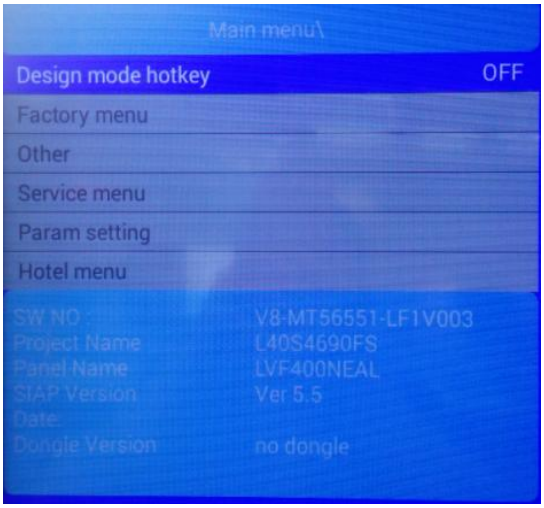

3.1 Accessing Way

a. When the **Design mode hotkey** item is disabled(**OFF**), press **Menu** button of remote control, then select **Settings/ Picture,** make sure the cursor stop on **Contrast** item submenu, press **1**, **9**, **5**, **0** consecutively.

b. When the **Design mode hotkey** item of **Design Menu** is enabled (**ON,** you can see the flashing **Factory Captions Info** on the lower left corner), press **Back** button of remote control.

Press RCU **OK** key to enter the submenu.
Press RCU **Right**/**Left** key to change the values.
Press RCU **Right**/**Left** key run the function.
Press RCU **Back**/**Menu** key exit the Factory menu.

Design Captions Information is the same to Factory Captions Info.

3.2 Design Menu

Design Menu		
Name	**Default**	**Description**
Design Mode hotkey	**OFF**	Design Menu shortcut button switch The item must be disabled (OFF) after production
Factory menu	**..**	Access to **Factory Menu**
Other	**..**	The item includes a number of functions offering convenience for R&D engineer to solve problems.
Service menu	**..**	Provide many useful information for after-sale service Please reference to SERVICE MENU submenu
Param setting	**..**	Include sound setting,picture setting, SSC, DBC, CI Card, Overscan, WIFI CHECK and USB FILE. Please reference to PARAM SETTING submenu.
Hotel menu	**..**	Include special functions which bring benefits to hotel management. The item is accessible only when Hotel Service On/Off item is enabled (ON).

3.3 Other Menu

The **Other Menu** contains some TV basic information, with which we can check the TV setting before production.

Other Menu		
Name	**Default**	**Description**
TestPattern	**>**	Switch the TV source into test pattern, and restarting TV is the only way to excit.
UartEnable	**OFF**	The switch of VGA serial port information. The item must be disabled (OFF) after production.
DeviceID	**..**	Show the device id of TV.
MAC	**..**	Show the MAC address of TV.
HuanID	**..**	Show the Huan id of TV.
ClientType	**..**	Show the Client type information.

3.4 Service Menu

Service Menu contains some basic information of the device, such as Project ID, Hardware, Software version, USB Update etc. This menu is especially useful for after-sale service.

Service Menu		
Name	**Default**	**Description**
Project ID	**1**	Select project parameters, depending on the BOM description.
Hardware	**MT5655**	mainboard Chassis
Software	**V8-MT56551-LF1V003**	version number of Main Software
Bootloader	**XXX**	version number of bootcore
USB Update	**..**	Update the software by USB disk, detailed description see Appendix 2 “Software Update”

3.5 Param Setting Menu

Param Setting menu contains Sound Setting, Picture Curve, Picture Setting, SSC, DBC, CI Card, Overscan, WIFI CHECK and USB FILE. But it is exclusively used by R&D engineer, anyone else shouldn't change the settings in the menu.

Param setting Menu		
Name	**Default**	**Description**
Sound Setting	**..**	Set sound mode, balance, sound scene, etc.
Picture Curve	**..**	Exclusively used by R&D
Picture Setting	**..**	Set picture mode, brightness, contrast, backlight, etc.
SSC Adjust	**..**	Spread Spectrum clocking. Exclusively used by R&D.
DBC	**..**	Dynamic Backlight Control. Exclusively used by R&D.
CI Card	**ON**	Common interface Card switch.
WIFI CHEAK	**..**	Check the WIFI link
USB FILE	**..**	Access the USB file

4. Test & Alignment

According to the requirement of order, we suggest take the below steps to finish the appropriate settings.

Note:

- All tests and measurements mentioned hereafter have to be carried out at a normal mains voltage (**100 ~ 240 VAC**)
- All voltages have to be measured with respect to ground, unless otherwise stated
- All final tests have to be done on a complete set including LCD panel in a room with temperature of **25+/-7°C**
- The Picture Performance assessment such as White Balance (luminance and colour temperature) has to be performed into subdued lighted room after at least **60min** of warm-up in order to avoid any temperature drift influence (colorimetry vs time).

4.1 Pre-Conditions and Power Supply Check

Before power-on, please check the board according to the relevant block diagram and circuit diagram, make sure that no serious issue or mistake can destroy the board. For example, the output of DC/DC and LDO should not be shorted to ground.

Supply a suited voltage and power-on, then check the voltage according to the relevant block diagram, circuit diagram and voltage spec, the error should be less than 5%, for example, the voltage for main chip (+3V3, +2.5V, VDDC1V15, 1V5_DDR, etc.), the voltage for TUNER (TU_3V3), the voltage for amplifier (AMP_VCC), etc.

Position	Value	Test Point
P103	12V±10%	12V
LDH1	5V±5%	+5V
P103	3.3V ±1%	3V3SB
UD33	3.3V ±1%	3V3
LDJ1	1.5V ±1%	DDR_1V5
LDB0	1.2V±1%	CORE_1V2
UD18	1.8V ±1%	1V8
UT2	3.3V ±1%	TUNER_VCC
U201	3.3V ±1%	3V3_DEMO
L201	1.1V ±1%	NC

4.2 Project ID Modification

There are different ID stored in the EMMC depending on different Panels settings and Model features, but there's only one key branching Project ID able to ensure normal display. And when you power on the TV set, you should make sure the Project ID is accord with the BOM description. If not, you need to modify

the ID. There are two methods to modify the ID:

Change Project ID in Design Menu

- In case of "**Design mode hotkey**" is enabled, press "**Back**" button to enter **Design Menu**. To modify Project ID, you need to go through "**Service menu→Project ID**", then press **Left** or **Right** key to select suitable ID (Project name is dynamically refreshed). Finally restart the TV set.
- In case of "**Design mode hotkey**" is unabled, you can enter the **Design Menu** easily with reference to **3.1 Design Menu.**

Change Project ID with RCU

- Press "**062598**"+"**Menu**"+"**XXX**" *(XXX represents project ID you'd like to switch to)* in the remote control and wait about half minutes, When the set restart automatically, you have successfully changed project ID.

  Here below is none exhaustive ProjectID table for reference:

MODEL	ProjectID	Panel Name
L40S4690FS	001	LVF400NEAL

4.3 Function Test

Once the Project ID is correct and the TV display normally, plug all external generator devices to relevant inputs/outputs below according to their respective test patterns format and check picture content and sound quality accordingly:

Source	Test Signal	Test Pattern
RF Input (PAL/DVB/DVB-T2)	RF cable	Factory signal
AV (CVBS)	Chroma/Fluke generator	PAL Half Color & Gray bars
VGA	Chroma/QuantumData generator	1024x768@60Hz Half Color & Gray bars
HDMI (Video & Audio)	DVD with HDMI compliancy	Movie 720p@60Hz
LAN (RJ45)	Ethernet	Any network
Audio OUT	RF signal	Suitable channel
USB	Video/MP3/Image	Home/Media/
SPDIF	DOSS	Audio output
PCMCIA	TV source	Suitbale PCMCIA Card

4.4 LAN/WLAN Test

MAC Address Upgrade

Upgrading MAC address needs to use the tool in factory and through serial command. The specific method is according to the operation of the factory guidance.

DeviceID (DID) and UserID (UID)

Purpose is to allow Other Network Download (OND) and further specific services over dedicated portal based on AP. For such, specific DID (32 bytes) and UID (8 bytes) needs to be paired and overwritten into memory for internal client encryption,as below:

Device ID	User ID
2bbf5dec37068855003ef54b9e27f3be68118899	3546187

Those DID/UID codes can only be set using UART commands following enclosed SIACP requirements (rev. v3.9).

LAN Test

A rough LAN test can be done by connecting Ethernet to TV's RJ45 and check that IP, subnet mask, DNS addresses, which are visible on "**Home→Settings→Network→Ethernet settings→IP settings**" (ensure that "Internet Connection" is Enabled at first). More in-depth test can be performed faster using suitable UART/IR commands following SIACP requirements. SW will internally manage Network ID (NID) flag controlling all MAC/DID/UID integrity to facilitate PA screening further.

See Appendix 3 "Network Connection"

4.5 SHOP INIT

At final process stage, it's necessary to perform **Shop** init before any packing to leave Factory mode and restore User default presets according to the requirement of order.

This function is accessible by selecting "**Factory Menu→Shop**", then pressing RCU "**Right** "or" **Left**" key. Other faster methods are available on above enclosed SIACP requirements (rev. v3.9).

Appendix

Appendix 1: Warm-up Test

Following TCL standard and practices, it's required minimum **15min** of **Warm-Up** that can be considered as **Burn-In**. Additional aging for **White Balance** alignment is no more necessary due to consistent picture performance with cloning usage. This function is accessible by selecting "**Factory menu →Warm up**", pressing RCU "**Right**" or "**Left**" key to set it **ON**, and then it enter in **Warm up** mode. Press "**Menu**" key on keyboard to exit the burning mode. Other faster methods are available on above enclosed SIACP requirements (rev. v3.9).



Appendix 2: Software Upgrade

How to upgrade Mboot

- Connect the computer and mainboard VGA port by a serial port tool.

  Serial connector definition: VGA/P303: Pin4: RXD VGA Pin11:TXD

- Open MTK “Mboot” software programming tool “**Flash Tool**”, and set serial port.

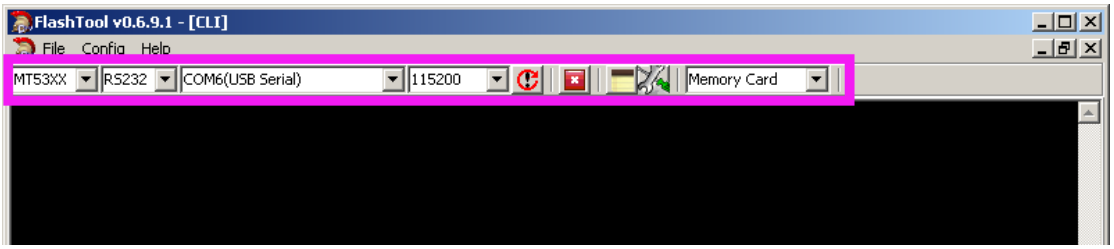

- Import the mboot file, as below.

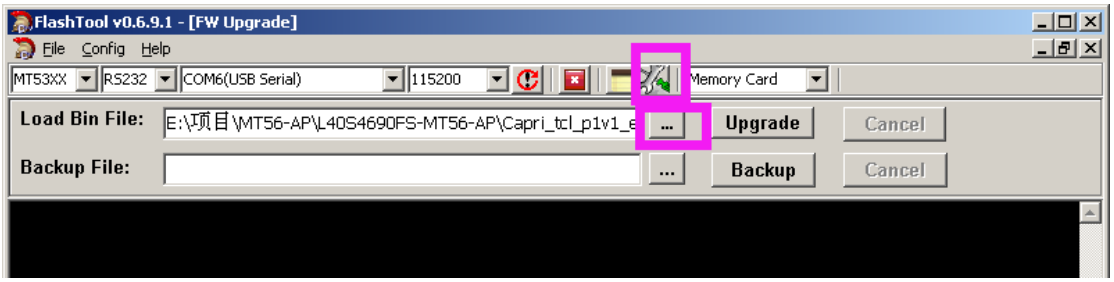

- power on the TV, then Click **Upgrade** key and you will see the below message.

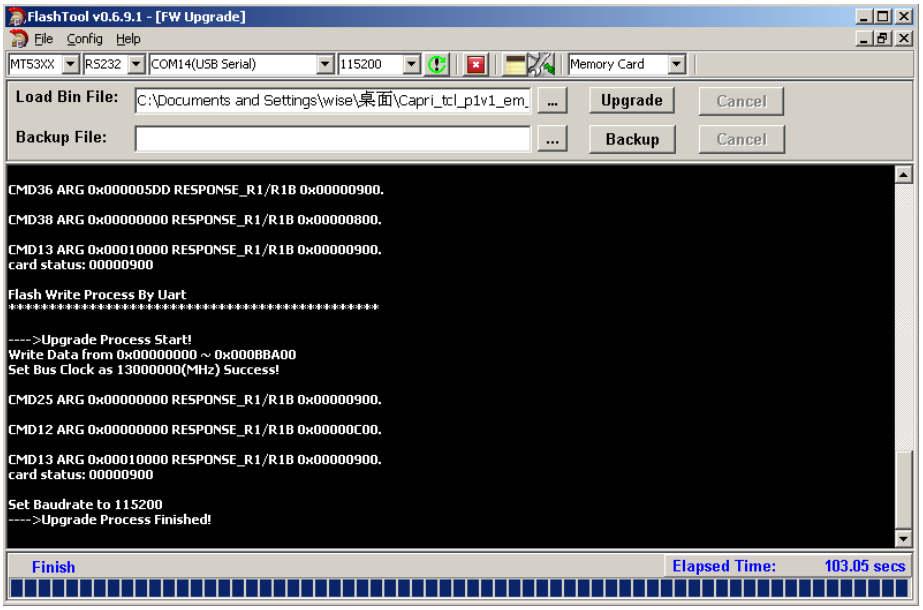

How to upgrade FLASH Software

1. USB Upgrade

- Download the update file (generally named V8-MT56551-LF1VXXX.pkg) to the root directory of your USB device, and make sure there's no other bin file named analogously. Then insert the USB device to USB interface of TV set.
- Power on the TV set, Press and hold on the menu key of key board at the same time. If the TV is updating, you'll see the below screen:

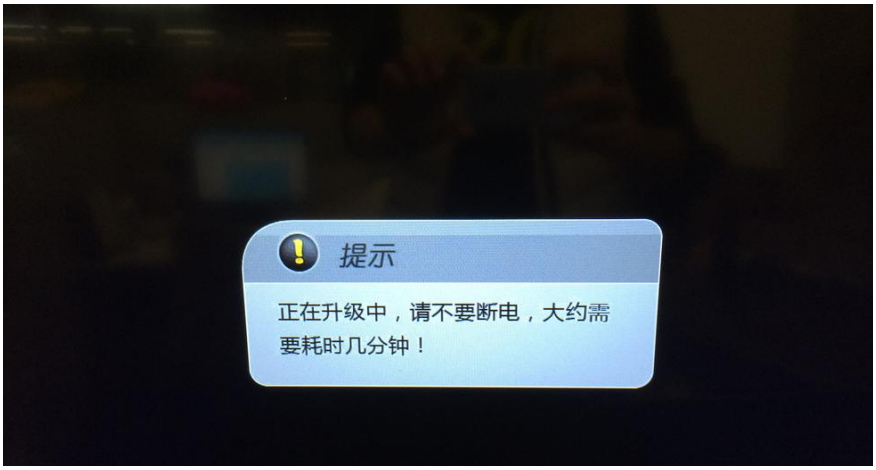

- Upgrade process takes about 3~5 minutes.
- After updating, the TV set will reset automatically.

2. Online Upgrade

- Download the bin zip file "V8-MT56551-LF1VXXX.Zip" to the root directory of your USB device, and do not change the file name. Then insert the USB device to USB interface of TV set.
- Press RCU **Menu/Settings/Picture/Contrast/1,9,5,0/Service menu/USB Update /Main Upgrade/Local Update** . If the upgrade file is found, TV will give a message that it verifying. TV displays a warning message, it means selecting "confirm" to continue or "cancel" to exit. During updating, do not power off the TV set.
- After updating, the TV set will reset automatically.

Appendix 3: Network Connection

You can set up your TV so that it can access the Internet through your local area network (LAN) using a wired or wireless connection.

Connect to a wired network

Attach the TV set to your LAN using cable in three ways:

- Connecting the LAN port on the TV to an external modem using a Cat 5 cable.
- Connecting the LAN port on the TV to an IP Sharer which is connected to an external modem. Use Cat 5 cable for the connection.
- Depending on how your network is configured, you may be able to attach the TV to your LAN by connecting the LAN port on your TV directly to a network wall outlet using a network cable. Note that the wall outlet is attached to a modem or router anywhere in your house.

Select **Home**→ **Settings**→ **Network** → **Ethernet Settings**→**IP Settings**, then the TV will obtain IP address Automatic configuration. In addition, you can set the IP address and password manually.

Connecting to a wireless network

To connect the TV set to your network wirelessly, you need a wireless router or modem and a Wireless LAN Adapter.

If the TV set is equiped with an internal WiFi module, select **Home**→ **Settings**→ **Network**→ **Wireless Settings**, then turn on **Wireless Switch**, select a wireless network and press **OK** to connect.

If you want to connect the TV set to a wireless network by a Wireless High Gain USB Adapter (USB dongle), select **Home**→ **Settings**→ **Network**→ **Wireless Settings**, then turn on **Wireless Switch** and **External WiFi**, and select a wireless network and press **OK** to connect.

Appendix 4: White Balance (WB) Adjustment

The White Balance generally is customized by PQ engineer, and uploaded to the PDM system, anyone else shouldn't change the value in the menu. If it is necessary to adjust, the following content can offer some reference, but the process of adjusting White Balance is out of the range of this file. Please refer to the relevant technical file of HuiZhou factory of TCL.

Calibration of Color Temperature

According to TCL standards, the color temperature and white reference coordinates of LCD like the following table: (This standard is based on CA-310 color temperature meter)

Product type	**Color temperature state**	**Color temperature**	**chromaticity coordinate**		**tolerance (X,Y)**
			X	**Y**	
LCD	cold	13000K	0.270	0.270	±0.015
	normal	10000K	0.280	0.290	
	warm	7500K	0.300	0.305	

- White balance adjustment takes the **Normal** color temperature of HDMI channel as the reference.
- **Warm** and **Cold** tone is relative to **Normal** mode. The adjustable gain range is 0~255.
- The **Normal** color temperature of other channel is relative to the **Normal** mode of **HDMI** channel. The adjustable gain range is also 0~255.
- The manual adjustment is according to the regulation above. Additionally, when manually adjust, it needs to do **White Balance init** first.

Take signal generator 22293 as an example, the timing value and pattern value of each source show in the following table:

source	HDMI	VGA	AV/ATV	CMP
Timing value	69	14	38	79
Pattern value	103	103	103	103

Note: 1) The input signal is 80% white when the pattern value of 22293 is 103.

2) The adjustment of White Balance should fulfill TCL matching specification.

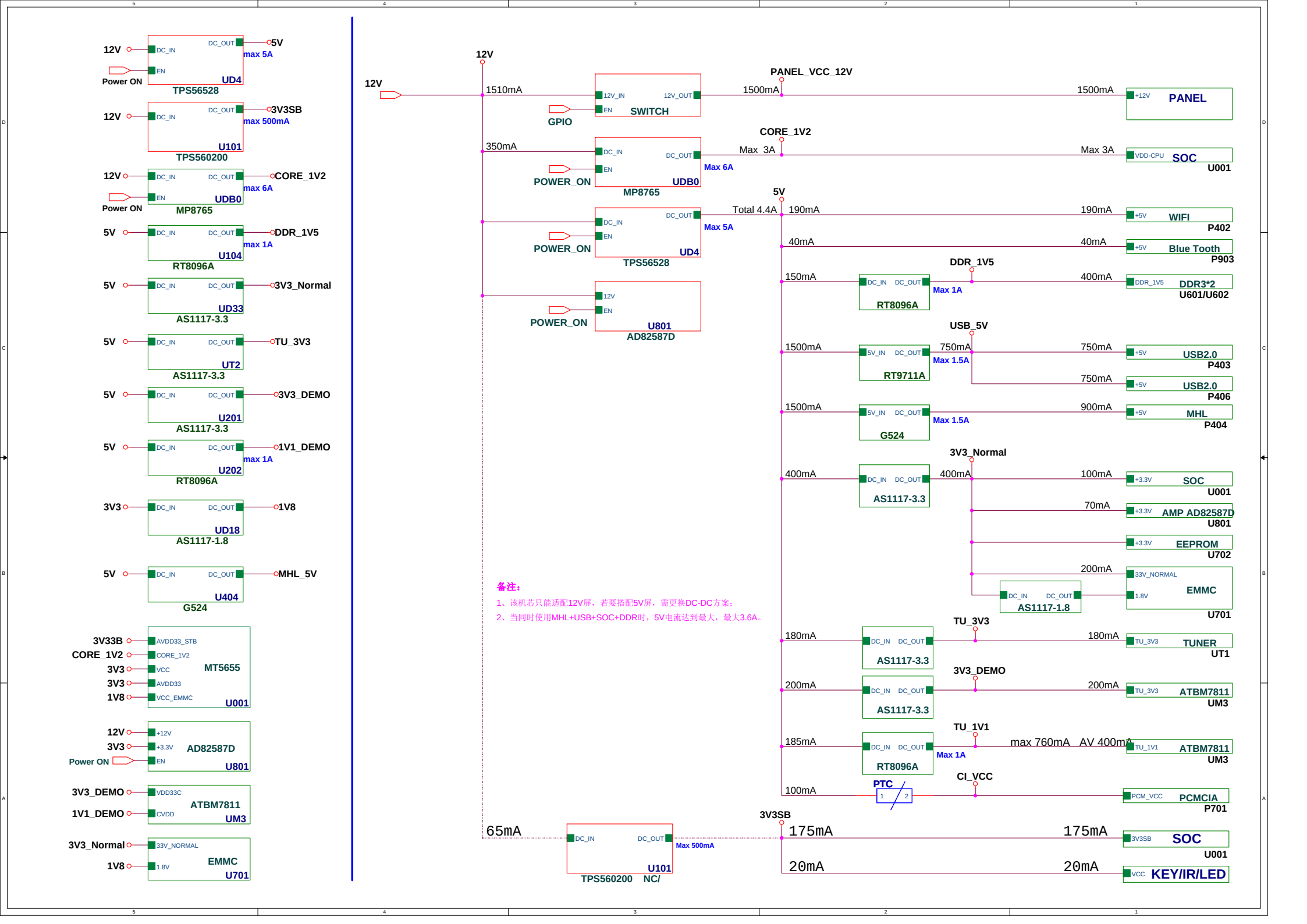
12V
DC_IN
DC_OUT
5V
max 5A
Power ON
EN
UD4
TPS56528
12V
DC_IN
DC_OUT
3V3SB
max 500mA
U101
TPS560200
12V
DC_IN
DC_OUT
CORE_1V2
max 6A
Power ON
EN
UDB0
MP8765
5V
DC_IN
DC_OUT
DDR_1V5
max 1A
U104
RT8096A
5V
DC_IN
DC_OUT
3V3_Normal
UD33
AS1117-3.3
5V
DC_IN
DC_OUT
TU_3V3
UT2
AS1117-3.3
5V
DC_IN
DC_OUT
3V3_DEMO
U201
AS1117-3.3
5V
DC_IN
DC_OUT
1V1_DEMO
max 1A
U202
RT8096A
3V3
DC_IN
DC_OUT
1V8
UD18
AS1117-1.8
5V
DC_IN
DC_OUT
MHL_5V
U404
G524
3V33B
CORE_1V2
3V3
3V3
1V8
AVDD33_STB
CORE_1V2
VCC
AVDD33
VCC_EMMC
MT5655
U001
12V
3V3
Power ON
+12V
+3.3V
EN
AD82587D
U801
3V3_DEMO
1V1_DEMO
VDD33C
CVDD
ATBM7811
UM3
3V3_Normal
1V8
33V_NORMAL
1.8V
EMMC
U701
12V
1510mA
12V_IN
12V_OUT
EN
SWITCH
GPIO
PANEL_VCC_12V
1500mA
1500mA
+12V
PANEL
350mA
DC_IN
DC_OUT
EN
POWER_ON
UDB0
MP8765
Max 6A
CORE_1V2
Max 3A
Max 3A
VDD-CPU
SOC
U001
DC_IN
DC_OUT
EN
POWER_ON
UD4
TPS56528
Max 5A
5V
Total 4.4A
190mA
190mA
+5V
WIFI
P402
40mA
40mA
+5V
Blue Tooth
P903
12V
EN
POWER_ON
U801
AD82587D
DDR_1V5
150mA
DC_IN
DC_OUT
Max 1A
RT8096A
400mA
DDR_1V5
DDR3*2
U601/U602
USB_5V
1500mA
5V_IN
DC_OUT
750mA
Max 1.5A
RT9711A
750mA
+5V
USB2.0
P403
750mA
+5V
USB2.0
P406
1500mA
5V_IN
DC_OUT
Max 1.5A
G524
900mA
+5V
MHL
P404
3V3_Normal
400mA
DC_IN
DC_OUT
400mA
AS1117-3.3
100mA
+3.3V
SOC
U001
70mA
+3.3V
AMP AD82587D
U801
+3.3V
EEPROM
U702
200mA
33V_NORMAL
1.8V
EMMC
U701
DC_IN
DC_OUT
AS1117-1.8
备注：
1、该机芯只能适配12V屏，若要搭配5V屏，需更换DC-DC方案；
2、当同时使用MHL+USB+SOC+DDR时，5V电流达到最大，最大3.6A。
TU_3V3
180mA
DC_IN
DC_OUT
AS1117-3.3
180mA
TU_3V3
TUNER
UT1
3V3_DEMO
200mA
DC_IN
DC_OUT
AS1117-3.3
200mA
TU_3V3
ATBM7811
UM3
TU_1V1
185mA
DC_IN
DC_OUT
RT8096A
Max 1A
max 760mA AV 400mA
TU_1V1
ATBM7811
UM3
CI_VCC
PTC
100mA
1
2
PCM_VCC
PCMCIA
P701
3V3SB
65mA
DC_IN
DC_OUT
Max 500mA
U101
TPS560200 NC/
175mA
175mA
3V3SB
SOC
U001
20mA
20mA
VCC
KEY/IR/LED

MAIN POWER

MTK

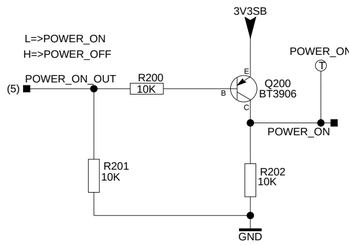

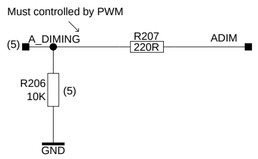

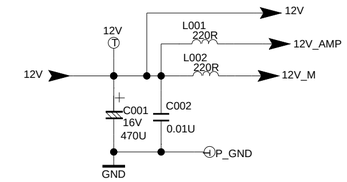

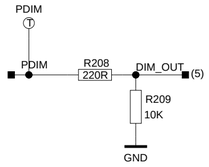

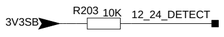

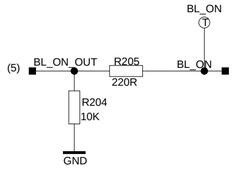

12V TO 5V

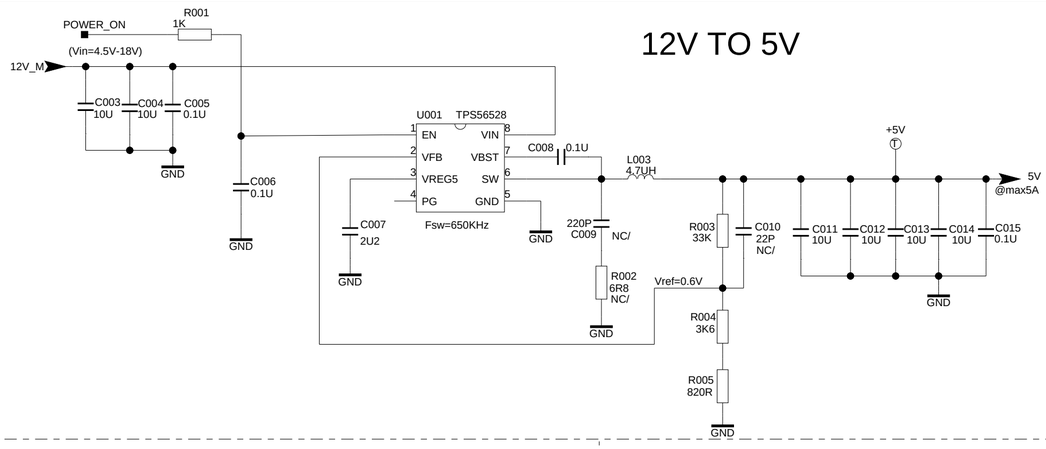

KEY Connector

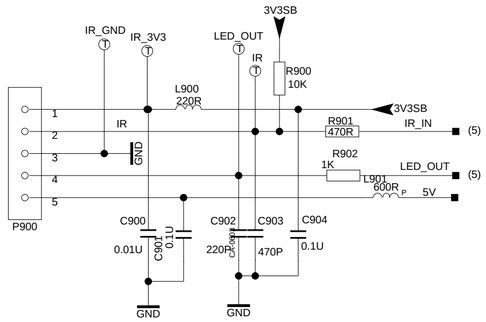

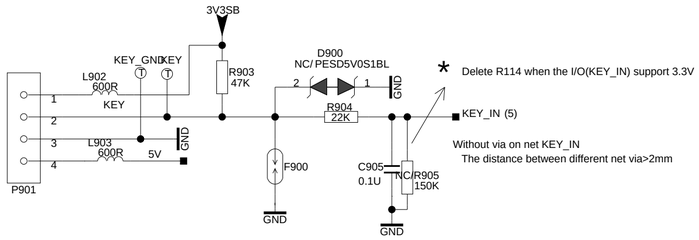

12V TO 1V2

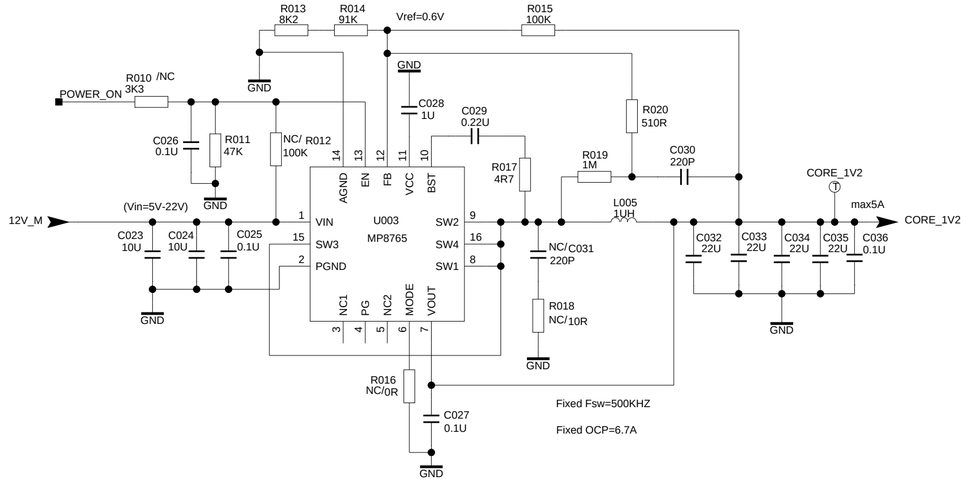

LDO 5V TO 3V3

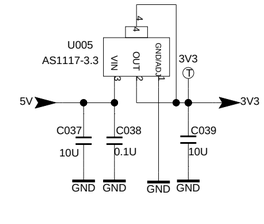

DDR 1V5

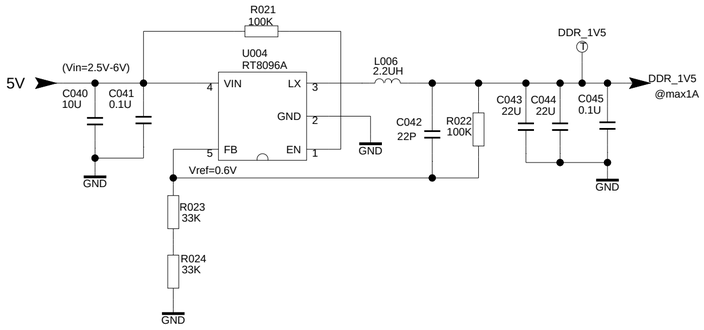

LDO 3V3 TO 1V8

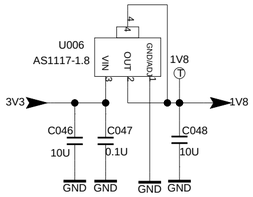

12V TO 3V3SB

SY8291,2015-04-23

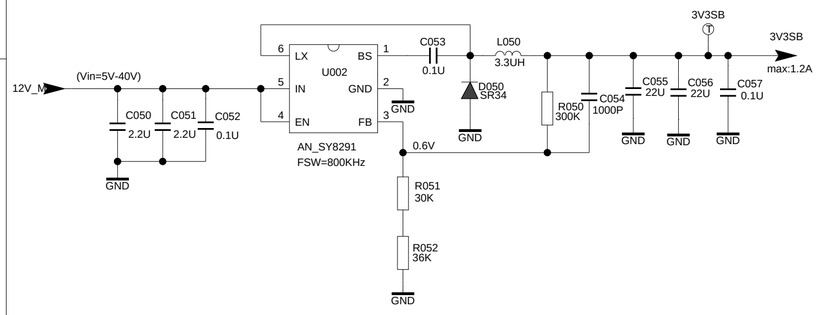

...	DD-MM	...	...	...	SBU :	
...	DD-MM	...	...	...	TCLNO:	
...	DD-MM	...	...	...	.....	
...	DD-MM	...	...	...	DESIGNATION	
Index-Lab	DATE	NAME	DESCRIPTION	Last modif	.....	

Last saved : 5-5-2008_15:52

TCL Thomson Electronics Ltd.
B Building, TCL Tower, Nanhai Road
Nanshan District, Shenzhen, Guangdong
Tel +86-755-3331xxxx Fax +86-755-3331xxxx

DRAWN	CHECKED	PAGE:
ON:	ON: DD-MM-YY	
BY:	BY:	OF :

THIS DRAWING CANNOT BE COMMUNICATED TO UNAUTHORIZED PERSONS COPIED UNLES S PERMITTED IN WRITING

FORMAT DIN A2

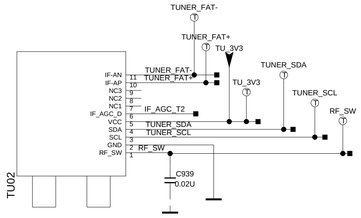

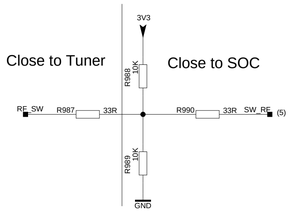

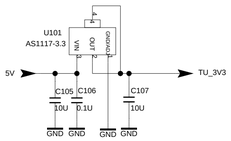

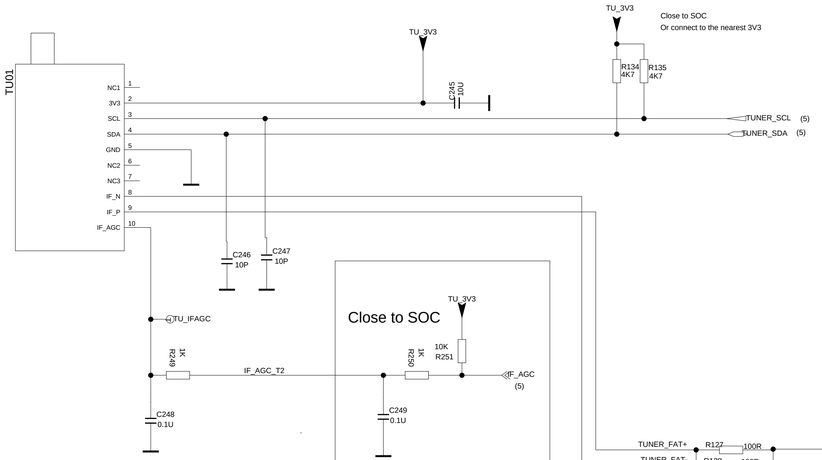

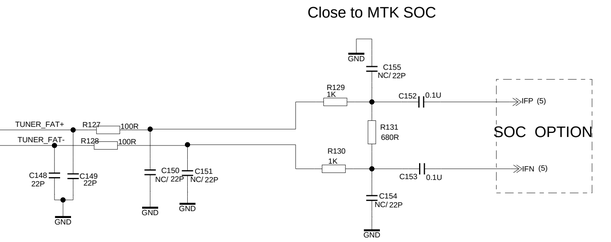

RT18/RT19/RT20 decided by the MTK SOC

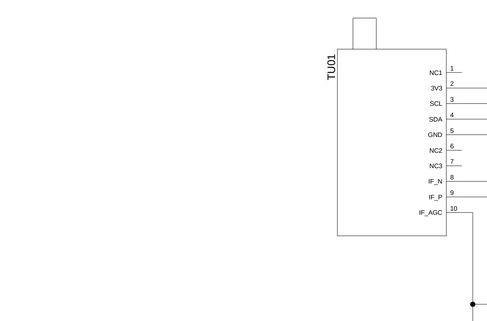

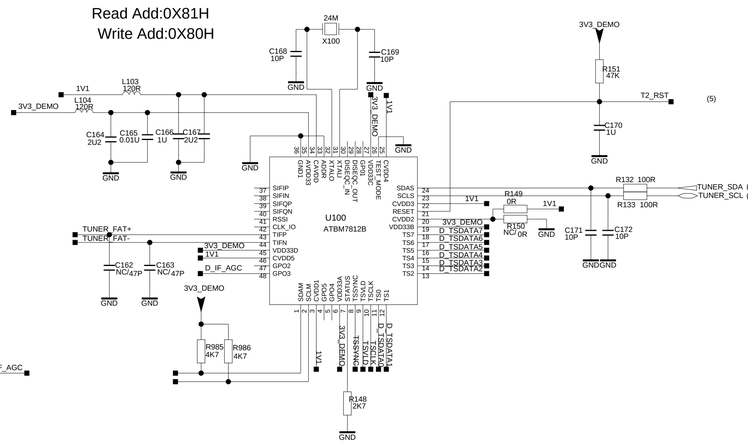

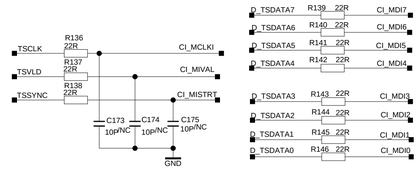

...	DD-MM	...	...	...	SBU :
...	DD-MM	...	...	...	TCLNO:
...	DD-MM	...	...	...	.....
...	DD-MM	...	...	...	DESIGNATION
Index-Lab	**DATE**	**NAME**	**DESCRIPTION**	**Last modif**	.....

Last saved : 5-5-2008_16:29

TCL Thomson Electronics Ltd.
B Building, TCL Tower, Nanhai Road
Nanshan District, Shenzhen, Guangdong
Tel +86-755-3331xxxx Fax +86-755-3331xxxx

DRAWN	CHECKED	PAGE:
ON:	ON: DD-MM-YY	
BY:	BY:	OF :

THIS DRAWING CANNOT BE COMMUNICATED TO UNAUTHORIZED PERSONS COPIED UNLESS S PERMITTED IN WRITING

FORMAT DIN A1

VGA JACK

MINI AV

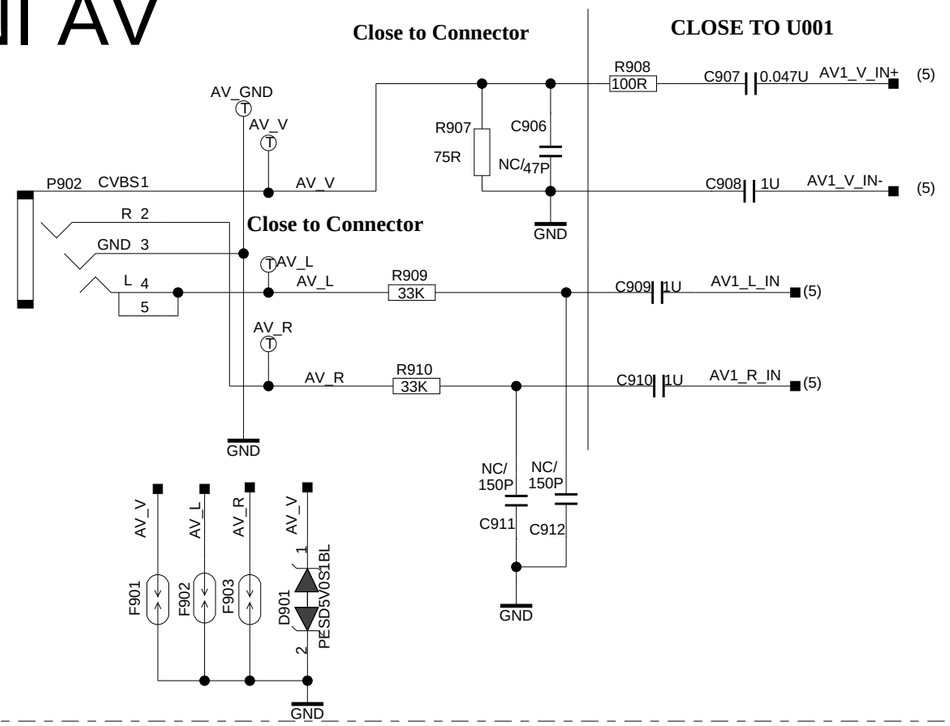

AV AUDIO OUT

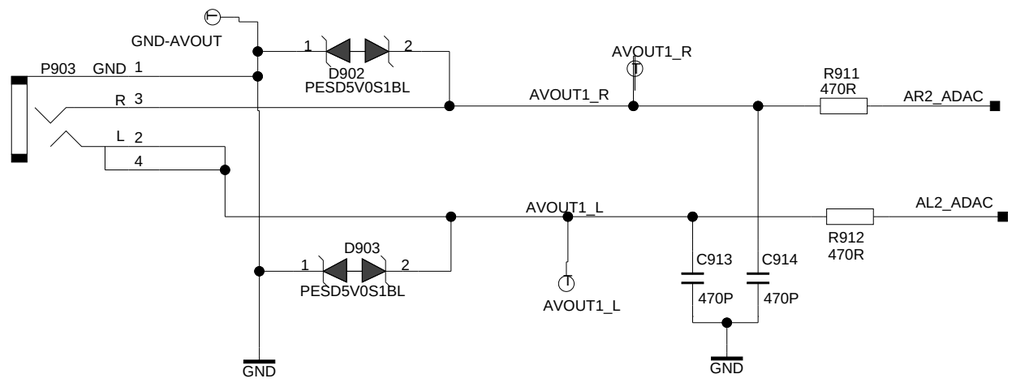

SPDIF

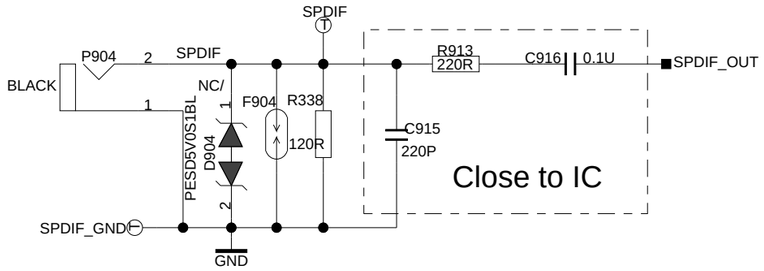

THIS DRAWING CANNOT BE COMMUNICATED TO UNAUTHORIZED PERSONS COPIED UNLES S PERMITTED IN WRITING

FORMAT DIN A3

USB2.0 Port

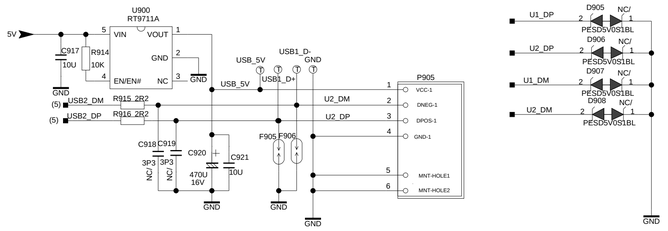

When use ESD Device, must delete 3.3pF on USB data line

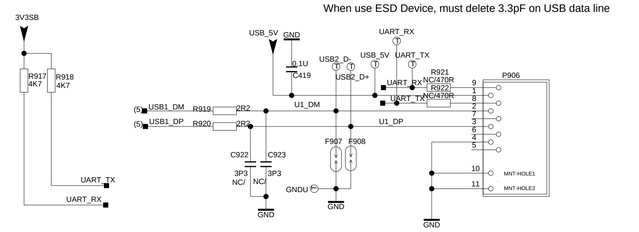

INTERNET

Must be differential 100ohm

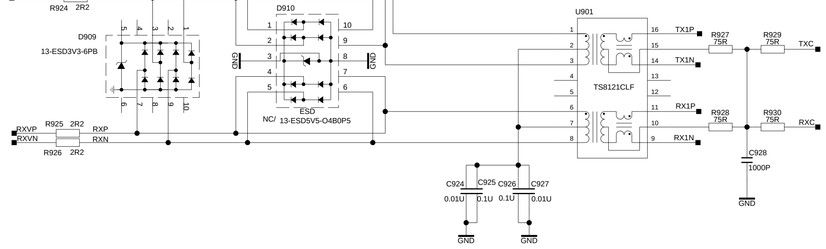

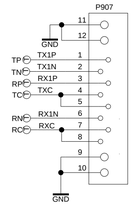

• WIFI

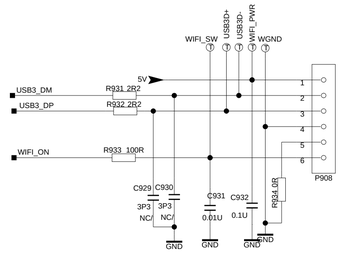

HDMI/MHL Prot1

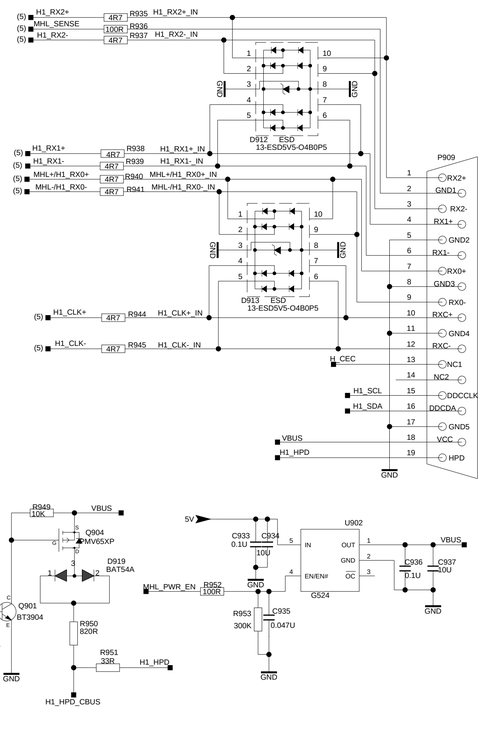

HDMI Port2

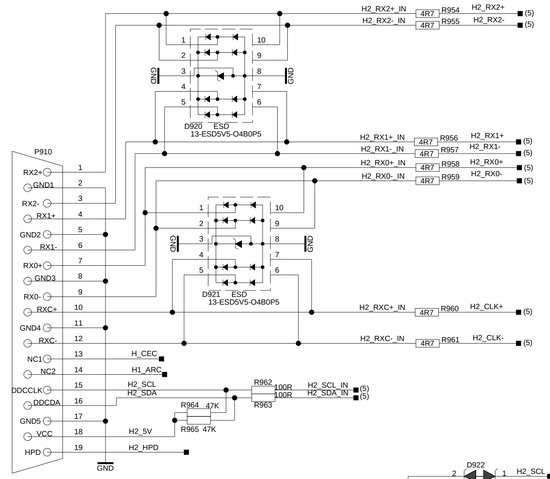

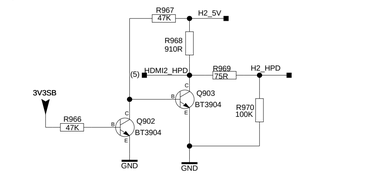

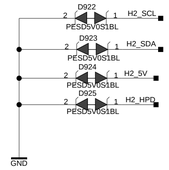

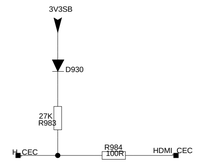

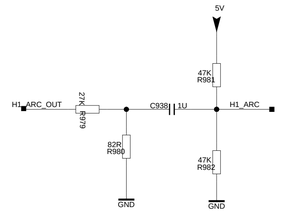

When AC power OFF and HDMI sourc is plugged in, HPD is Low
When Power on or Standby and HDMI source is plugged in, HPD is High
For MTK5507, reading EDID when HPD is High

...	DD-MM	...	...	...	SBU :	TCL
...	DD-MM	...	...	...	TCLNO:	ADDRESS1 ADDRESS2 ADDRESS3 TELEPHONE
...	DD-MM	...	...	...	.....	DESIGNATION
...	DD-MM	...	...	...		.....
Index-Lab	DATE	NAME	DESCRIPTION	Last modif	DRAWN	CHECKED / PAGE:
					ON:	ON: DD-MM-YY
					BY:	BY: ..... / OF :

Last saved : 11-23-2010_14:02

THIS DRAWING CANNOT BE COMMUNICATED TO UNAUTHORIZED PERSONS COPIED UNLESS PERMITTED IN WRITING

FORMAT DIN A1

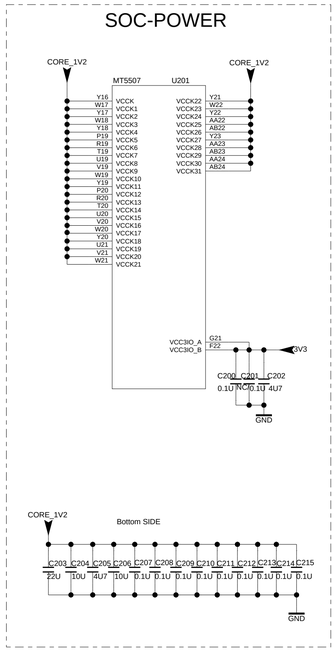

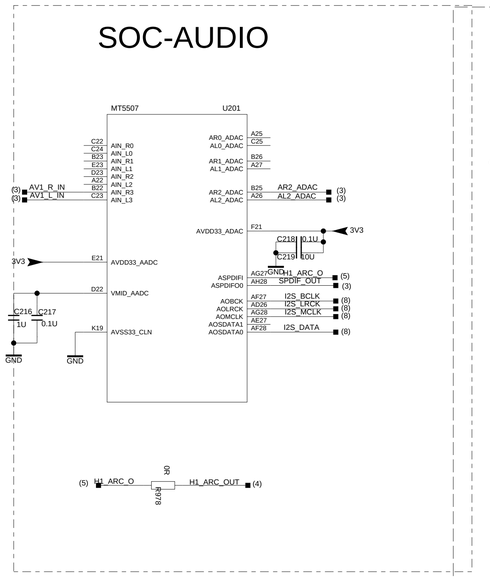

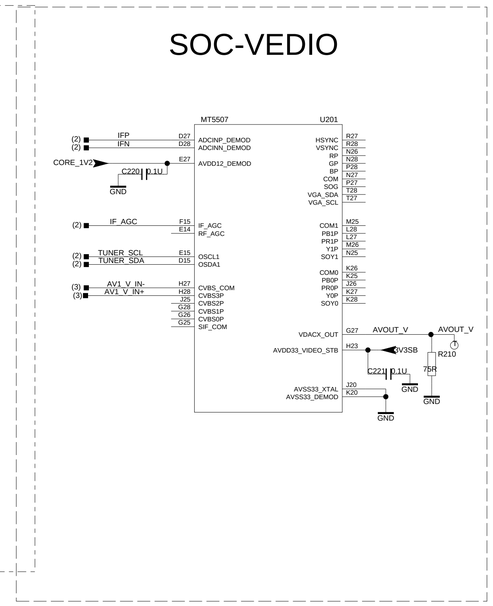

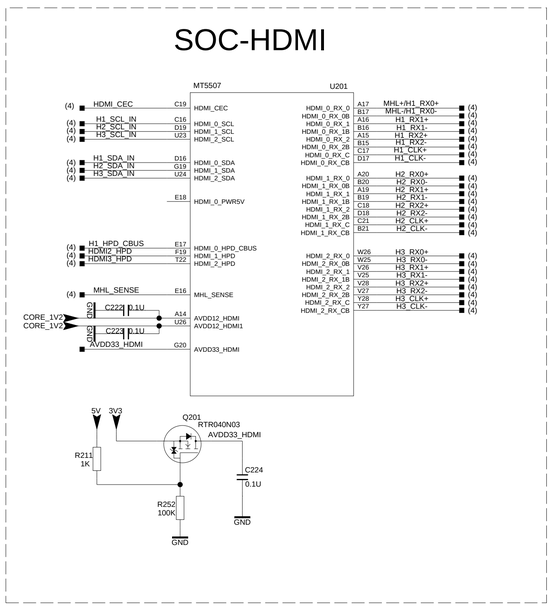

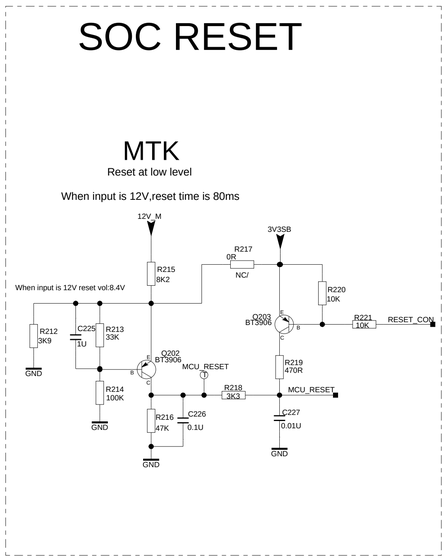

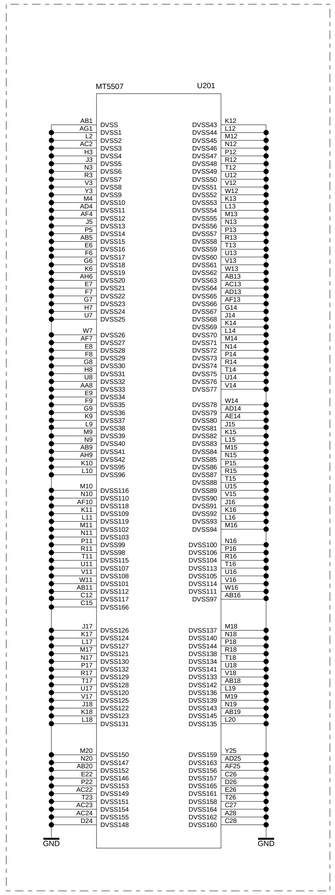

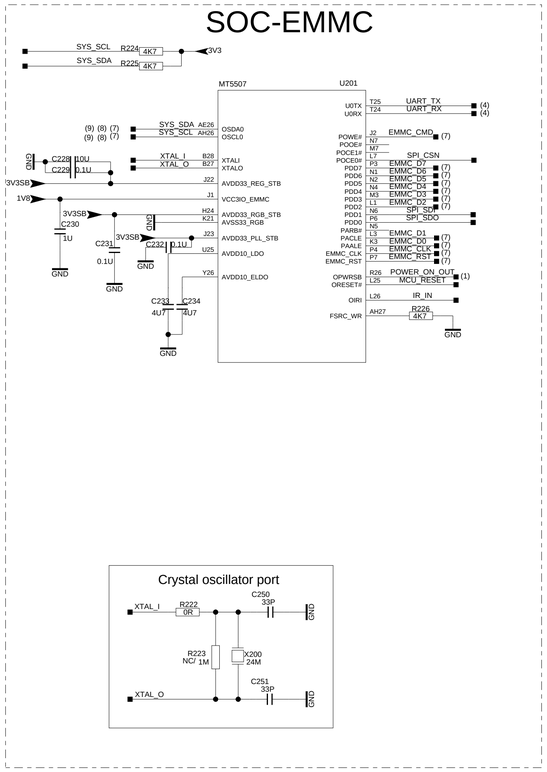

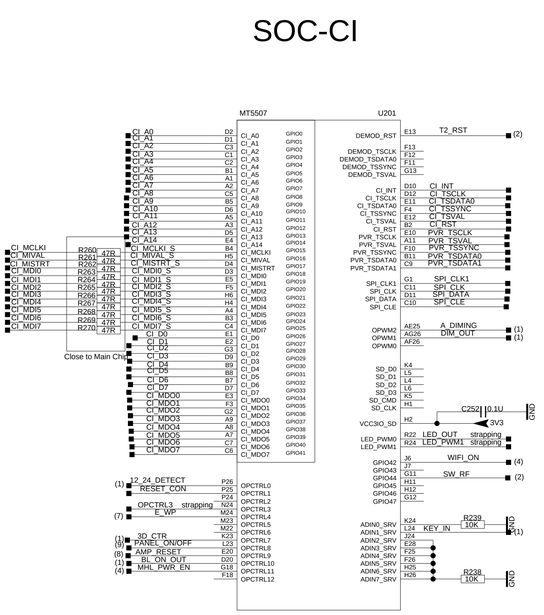

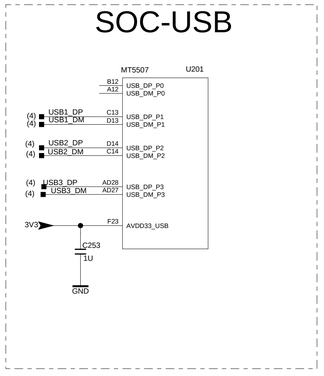

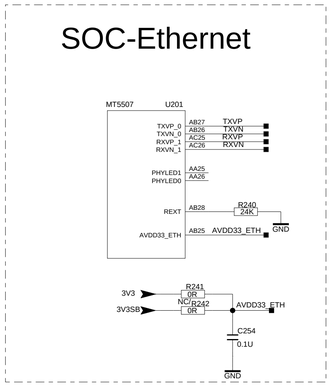

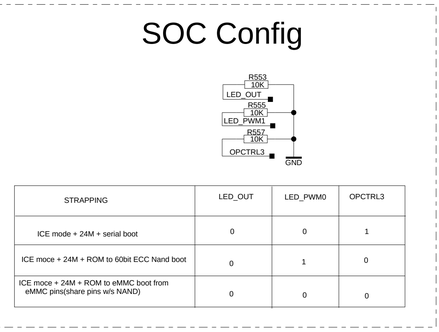

STRAPPING	LED_OUT	LED_PWM0	OPCTRL3
ICE mode + 24M + serial boot	0	0	1
ICE moce + 24M + ROM to 60bit ECC Nand boot	0	1	0
ICE moce + 24M + ROM to eMMC boot from eMMC pins(share pins w/s NAND)	0	0	0

...	DD-MM	...	...	...	SBU :
...	DD-MM	...	...	...	TCLNO:
...	DD-MM	...	...	...	.....
...	DD-MM	...	...	...	
Index-Lab	DATE	NAME	DESCRIPTION	Last modif	

Last saved : 5-5-2008_16:29

DESIGNATION

.....

TCL Thomson Electronics Ltd.
B Building, TCL Tower, Nanhai Road
Nanshan District, Shenzhen, Guangdong
Tel +86-755-3331xxxx Fax +86-755-3331xxxx

DRAWN
ON:
BY:

CHECKED
ON: DD-MM-YY
BY: .....

PAGE:
OF :

THIS DRAWING CANNOT BE COMMUNICATED TO UNAUTHORIZED PERSONS COPIED UNLESS S PERMITTED IN WRITING

SOC-DDR

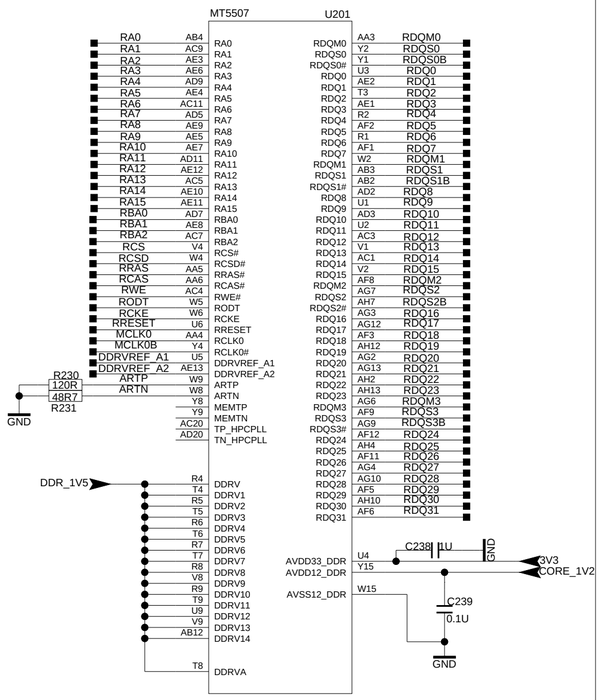

For MCM Dram VREF

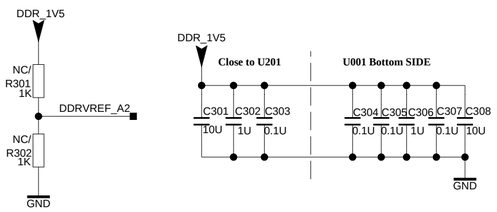

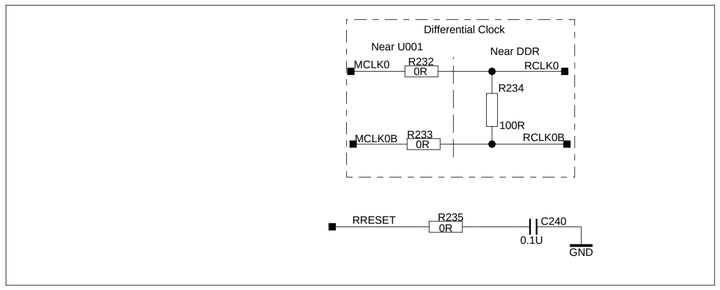

DDR

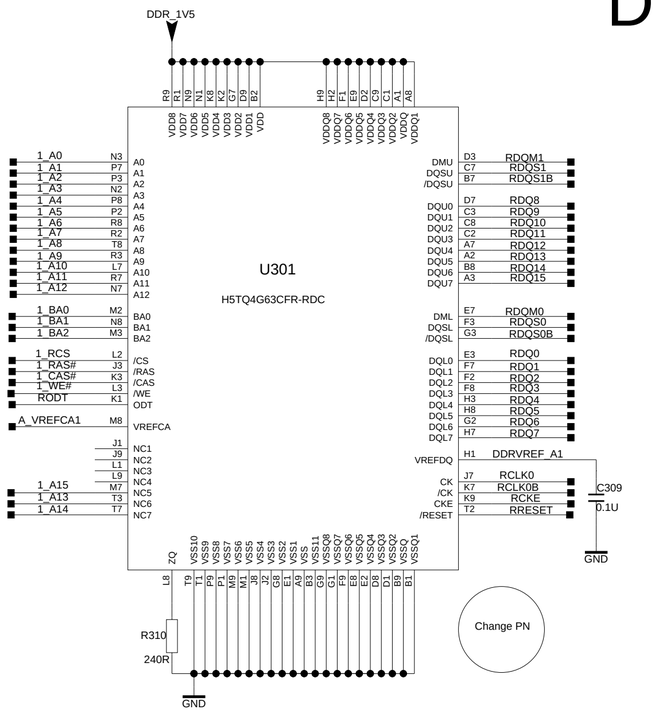

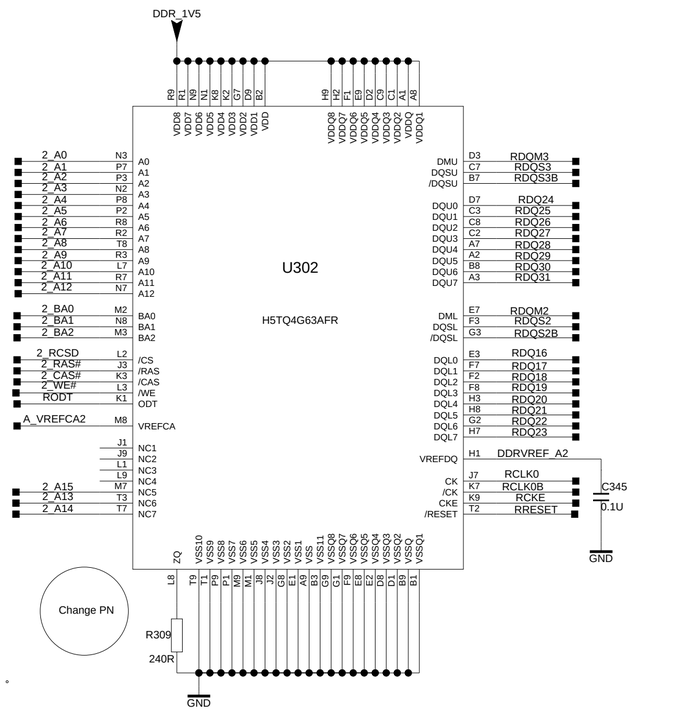

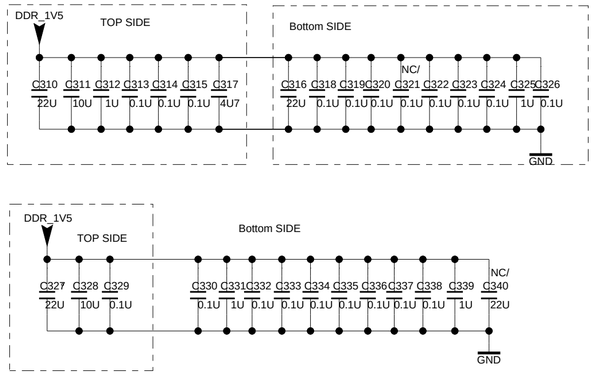

DDR REF Volt

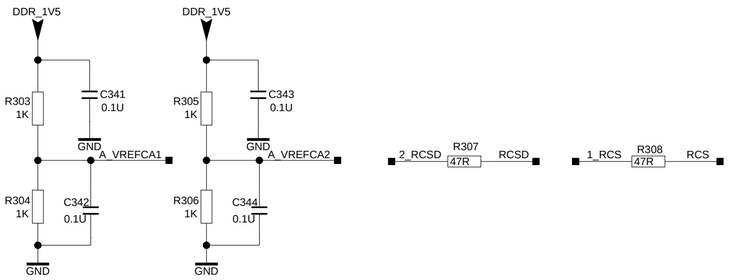

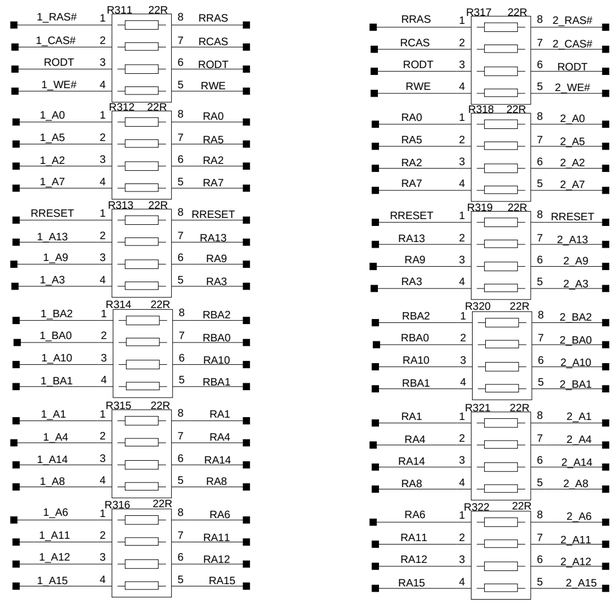

THIS DRAWING CANNOT BE COMMUNICATED TO UNAUTHORIZED PERSONS COPIED UNLES S PERMITTED IN WRITING

FORMAT DIN A2

THIS DRAWING CANNOT BE COMMUNICATED TO UNAUTHORIZED PERSONS COPIED UNLES S PERMITTED IN WRITING

PCMCIA

EMMC

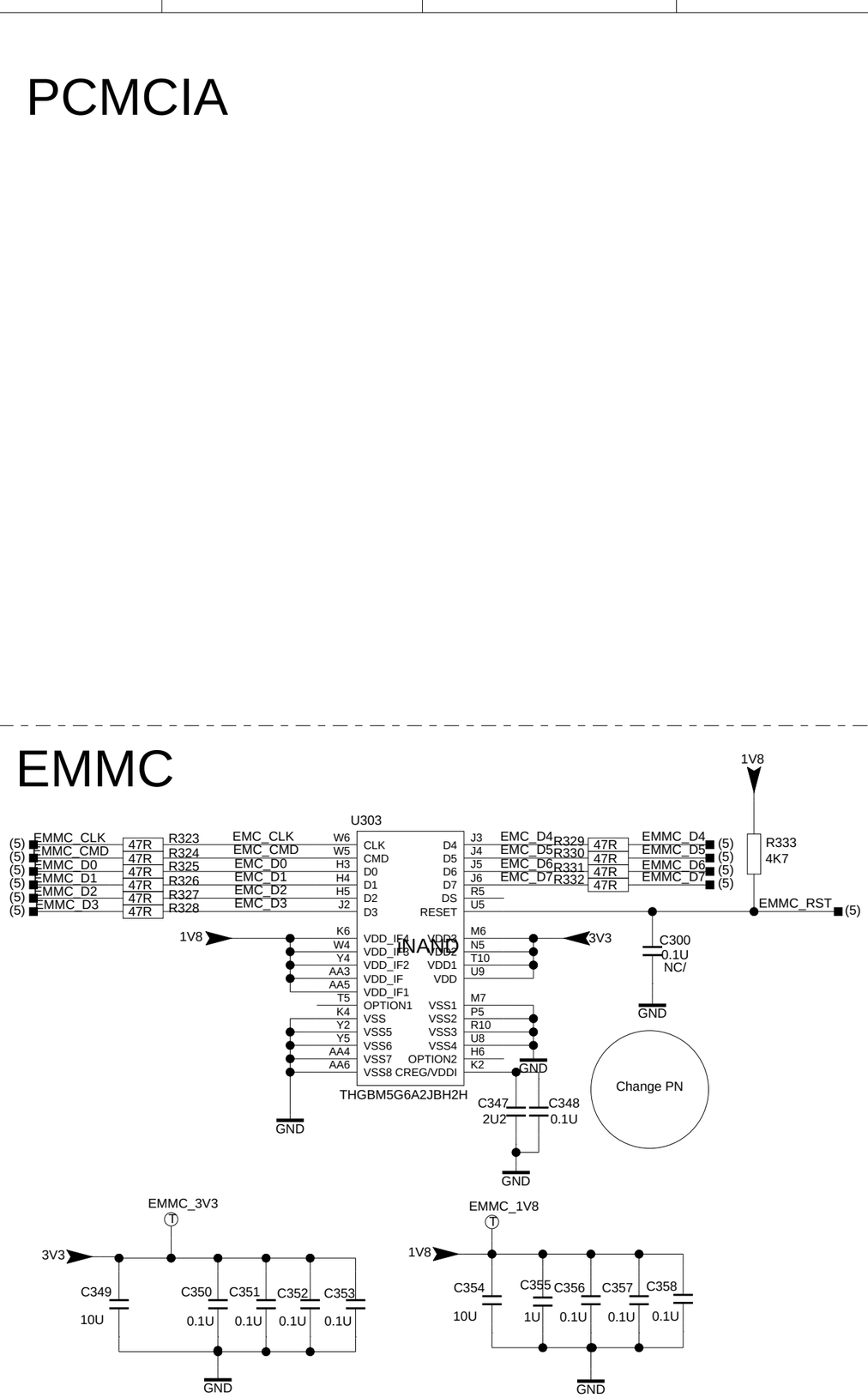

EEPROM

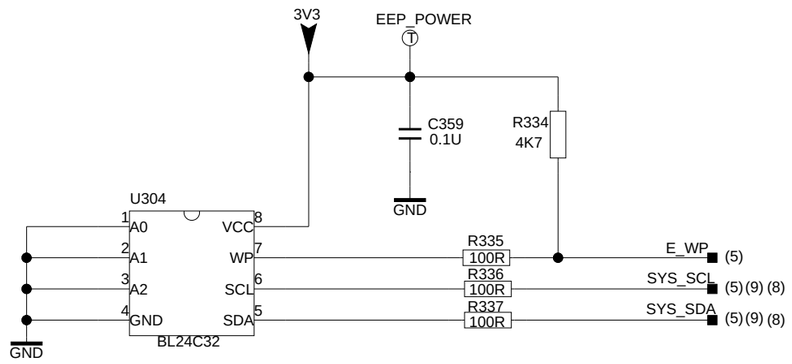

FORMAT DIN A3

AD82587D_12V

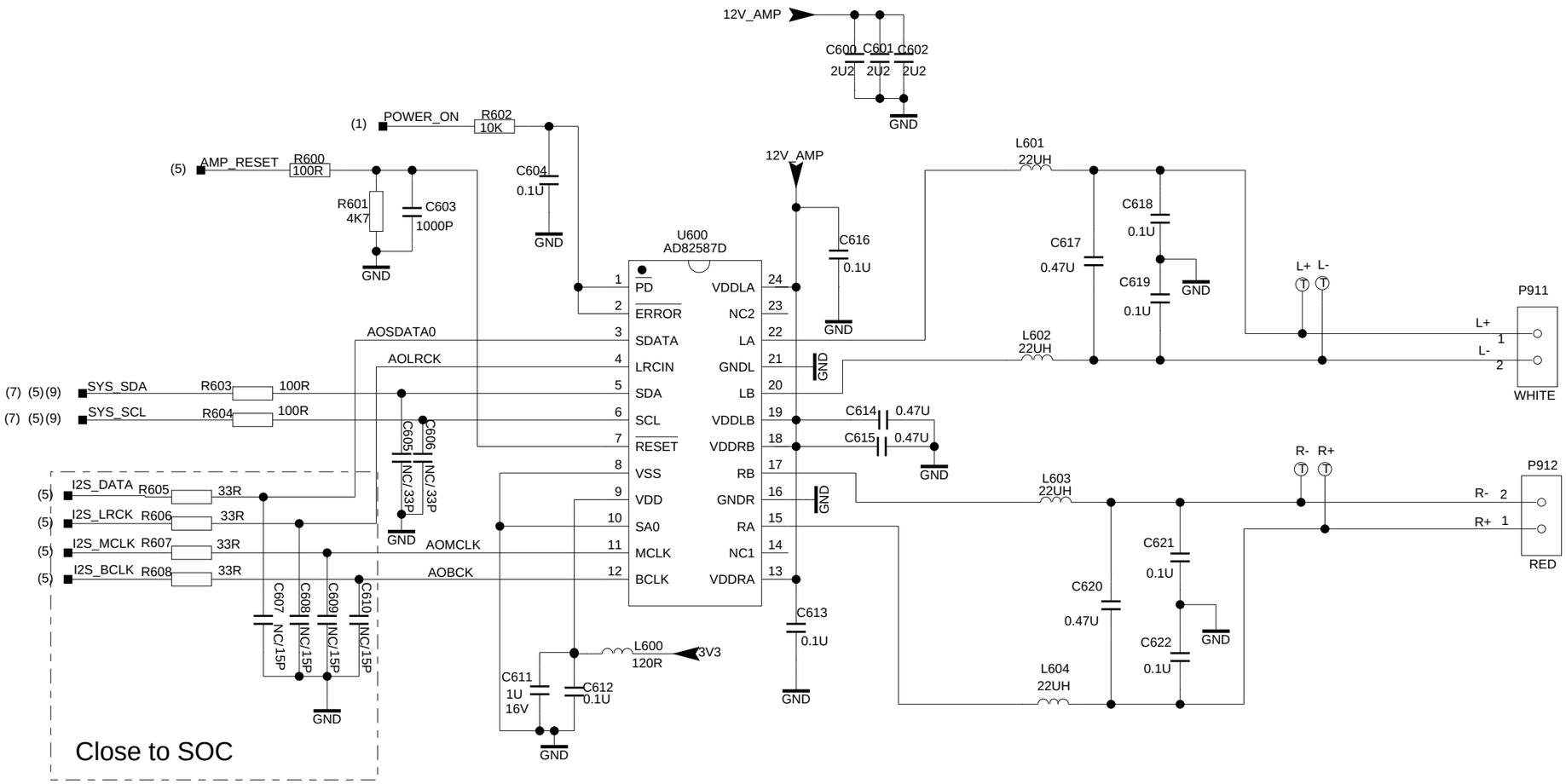

...	DD-MM	...	...	...	SBU :	
...	DD-MM	...	...	...	TCLNO:	
...	DD-MM	...	...	...	.....	
...	DD-MM	...	...	...	DESIGNATION	
Index-Lab	DATE	NAME	DESCRIPTION	Last modif	.....	

Last saved : 5-5-2008_16:29

TCL Thomson Electronics Ltd.
B Building, TCL Tower, Nanhai Road
Nanshan District, Shenzhen, Guangdong
Tel +86-755-3331xxxx Fax +86-755-3331xxxx

DRAWN	CHECKED	PAGE:
ON:	ON: DD-MM-YY	
BY:	BY:	OF :

THIS DRAWING CANNOT BE COMMUNICATED TO UNAUTHORIZED PERSONS COPIED UNLES S PERMITTED IN WRITING

FORMAT DIN A3

SOC LVDS

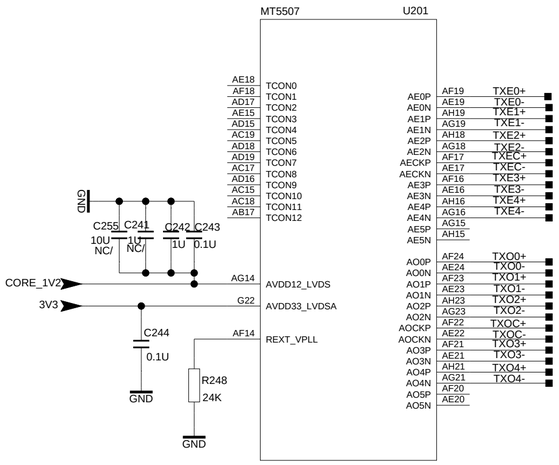

60Hz/120HZ FHD FFC Port(51PIN)

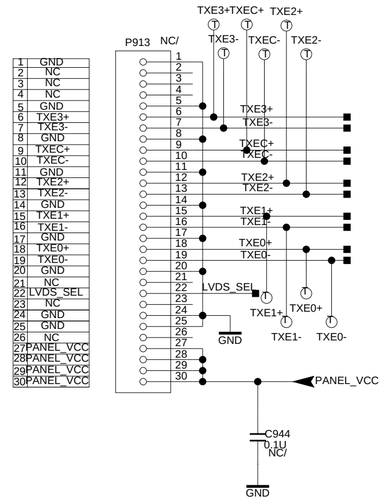

For 40-MT56HD-XXXXX

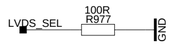

Place it as close to SOC as possible

60Hz HD FFC Port(30PIN)

No.	FFC PIN NAME	MCU
1	PANEL_VCC	
2	PANEL_VCC	
3	PANEL_VCC	
4	PANEL_VCC	
5	NC	
6	GND	
7	GND	
8	GND	
9	NC	
10	LD_EN	OUT
11	TXE4+	
12	TXE4-	
13	TXE3+	
14	TXE3-	
15	GND	
16	TXEC+	
17	TXEC-	
18	GND	
19	TXE2+	
20	TXE2-	
21	TXE1+	
22	TXE1-	
23	TXE0+	
24	TXE0-	
25	3D_LR_OUT	PWM
26	3D_EN	OUT
27	TXO4+	
28	TXO4-	
29	TXO3+	
30	TXO3-	
31	TXOC+	
32	TXOC-	
33	GND	
34	TXO2+	
35	TXO2-	
36	TXO1+	
37	TXO1-	
38	TXO0+	
39	TXO0-	
40	GND	
41	NC	
42	NC	
43	LG_DIM	PWM
44	LVDS_SEL	
45	3D_FORMAT1	OUT
46	3D_VSYNC_IN	IN
47	3D_FORMAT0/SDA/WP	OUT
48	SDA/SCL/WP	OUT
49	SCL	OUT
50	NC	
51		

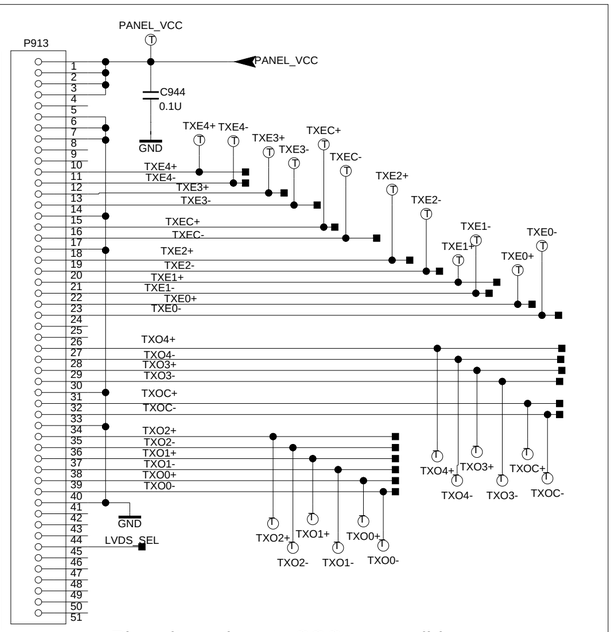

Place it as close to SOC as possible

For 40-MT56FD-XXXXX

Panel Power

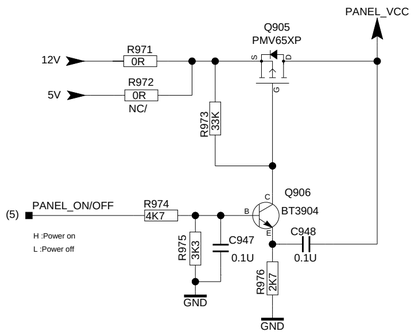

NOTE:HD FFC or FHD FFC only one in PCB

1. For HD Panel: use HD FCC
2. For FHD Panel 60HZ: use FHD FCC
3. Place P913 close to P914 on the same PCB board
4. LG_DIM_OUT are PWM port
5: DIM_SW_OUT is from DIM switch circuit
6: IIC option for panel

PANEL		CSOT	AUO	CMO	OTHER
R913	IIC_OPTION	NC	100	100	NC
R914	IIC_OPTION	NC	NC	100	NC
R915	IIC_OPTION	100	NC	NC	NC
R916	IIC_OPTION	100	100	NC	NC

7: Default value in this diagram is for panel without IIC

8: DIM option for MCU

MCU	LG_DIM_OUT		Not Define	
PANEL	LG	OTHER	LG	OTHER
R910	100	100	Not need	Not need
R911	Not need	Not need	100	NC

9:Define MCU port 3D_FORMAT0 as TCON_WP_OUT for panel: AUO T500HVN04.5;

THIS DRAWING CANNOT BE COMMUNICATED TO UNAUTHORIZED PERSONS COPIED UNLESS S PERMITTED IN WRITING

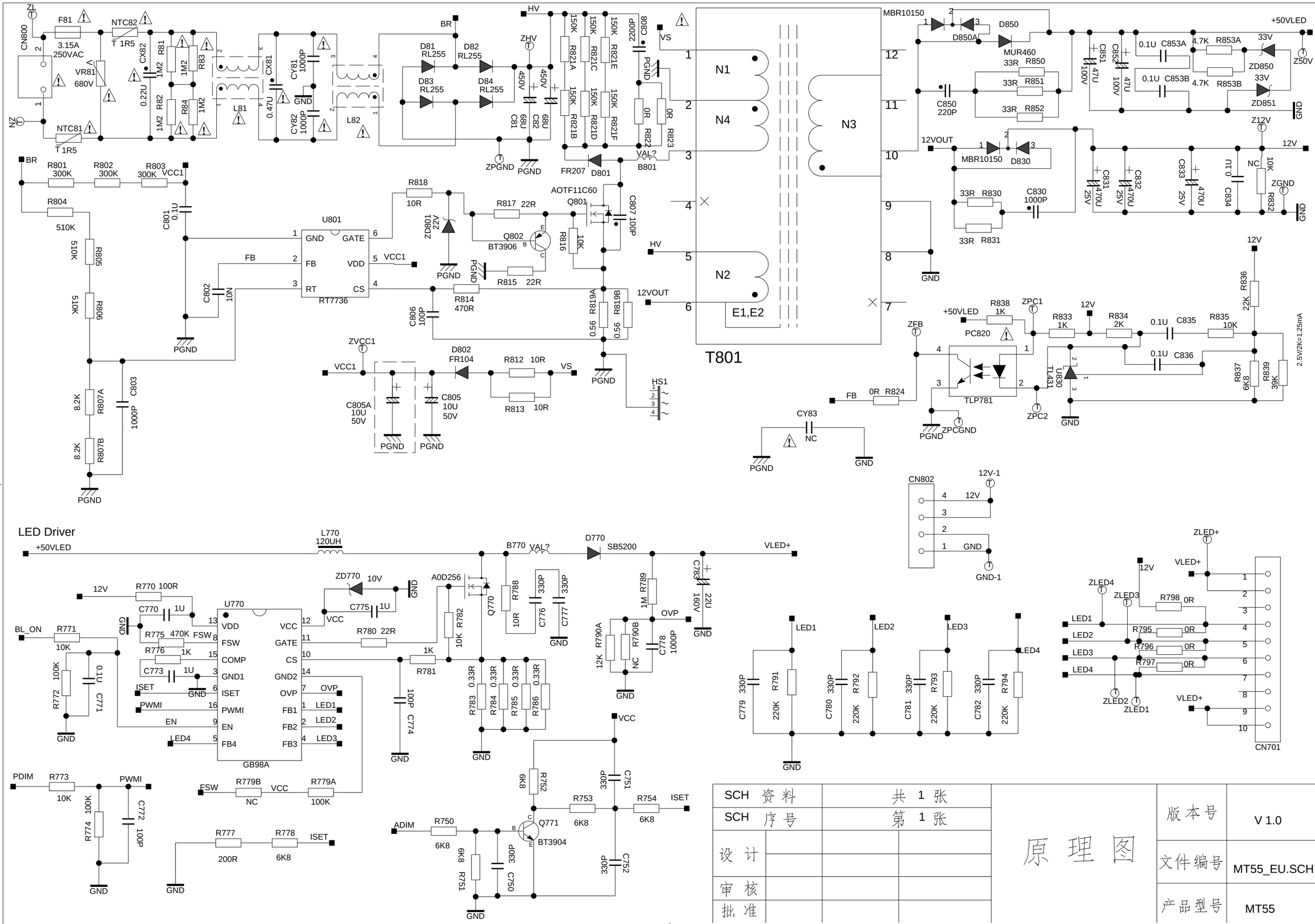

SCH 资 料	共 1 张	原 理 图	版本号 V 1.0
SCH 序 号	第 1 张		文件编号 MT55_EU.SCH
设 计			产品型号 MT55
审 核			
批 准			

Trouble shooting

1、 Can not switch on：

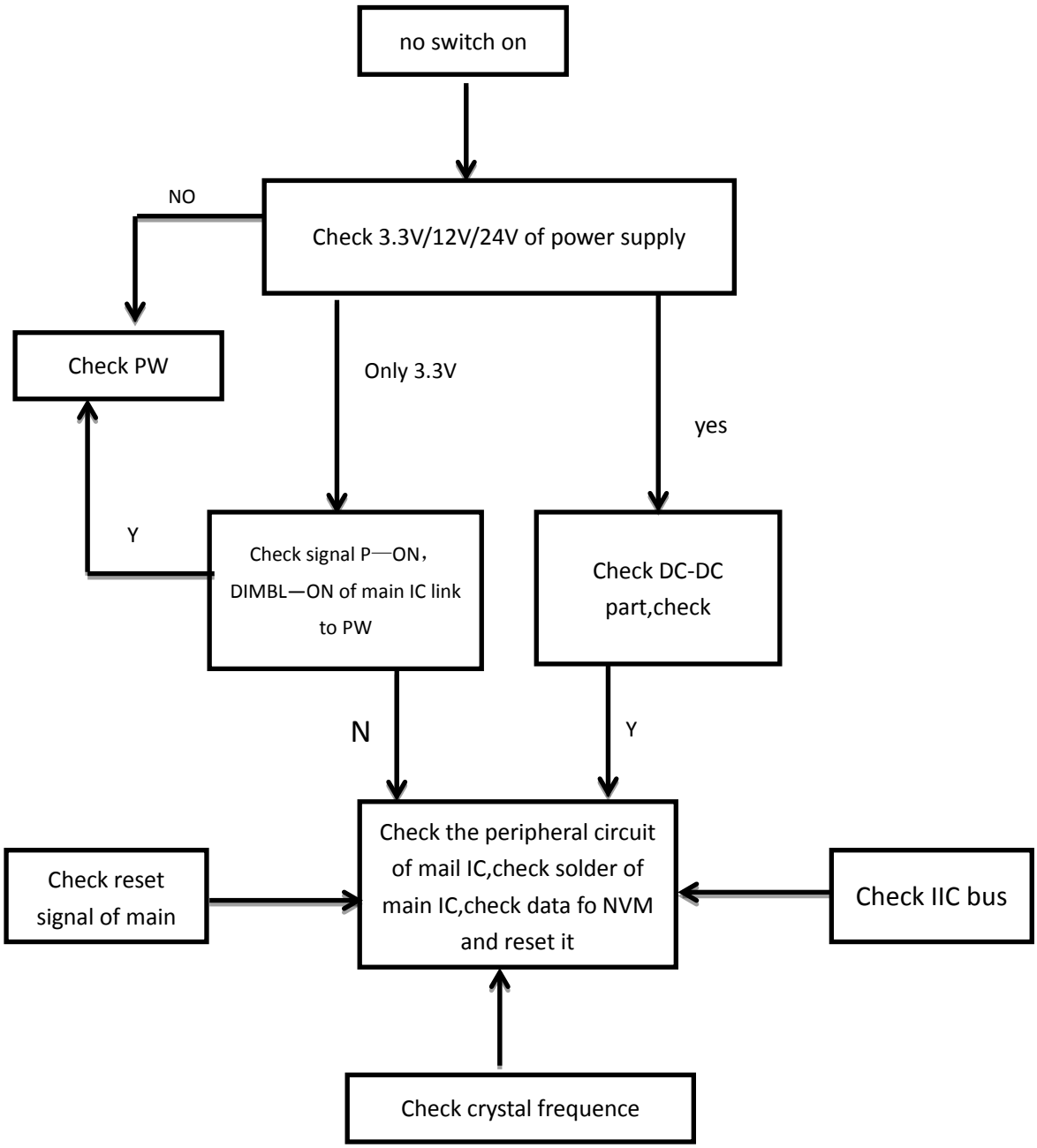

i

2、abnormal picture ：

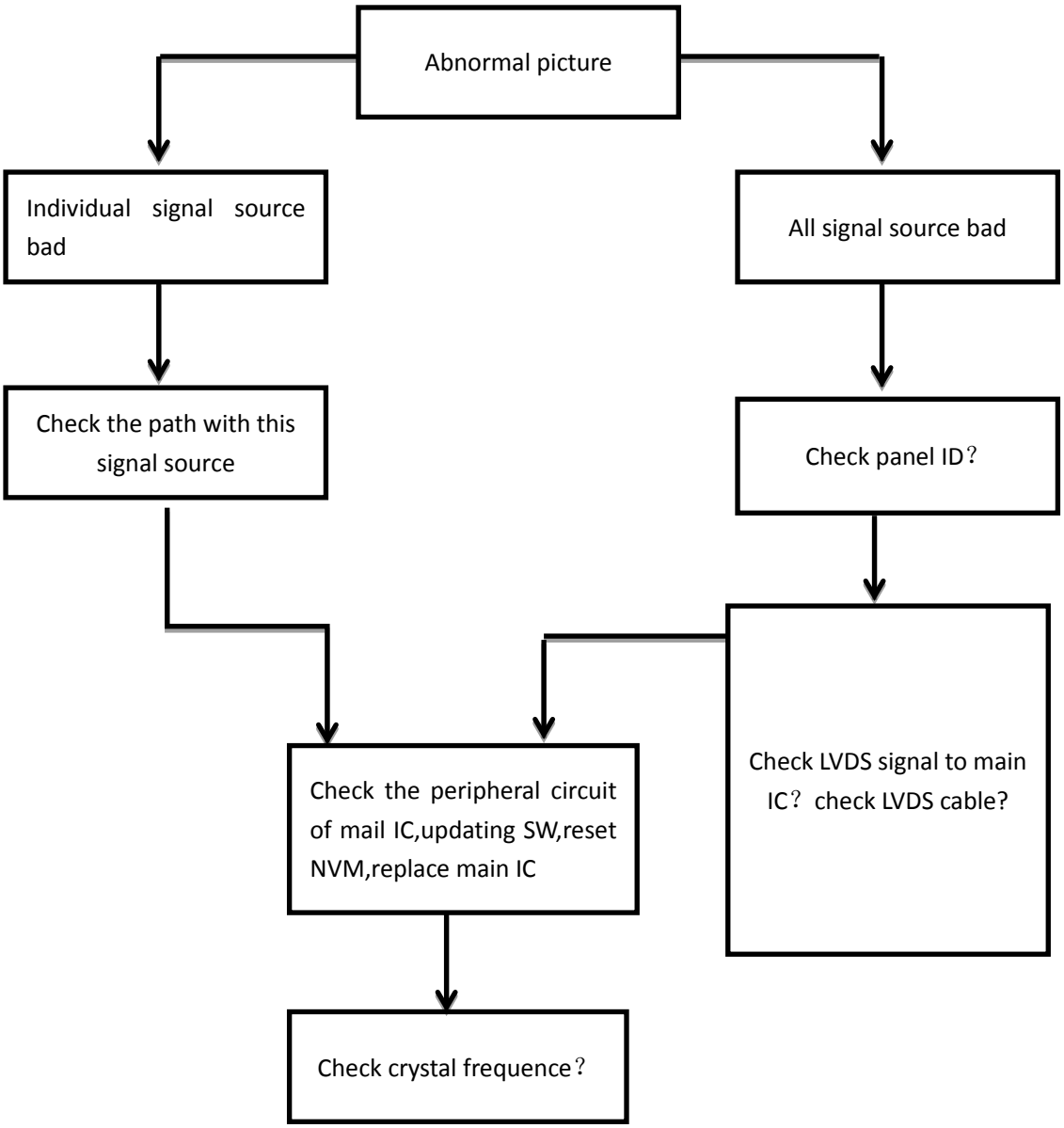

3、 Abnormal sound：

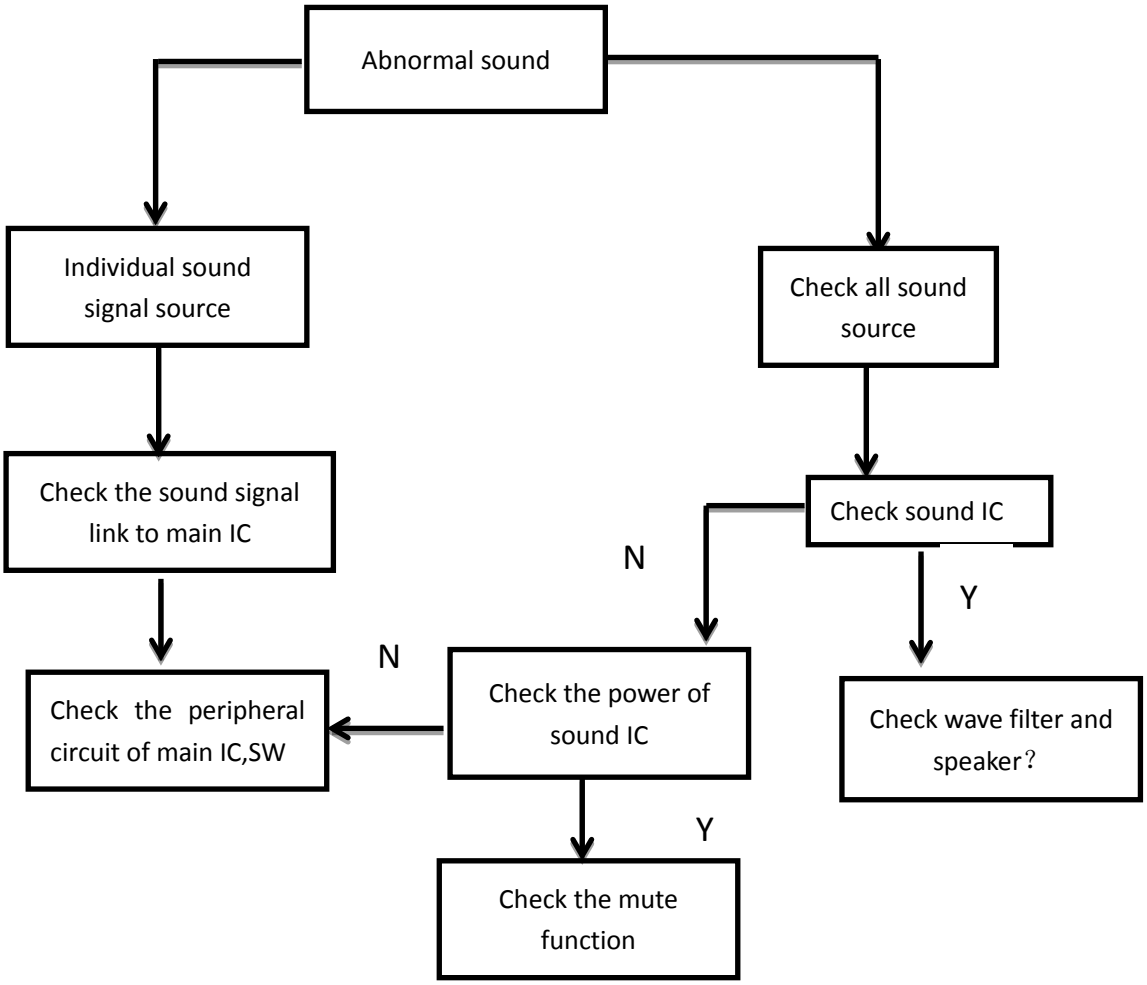

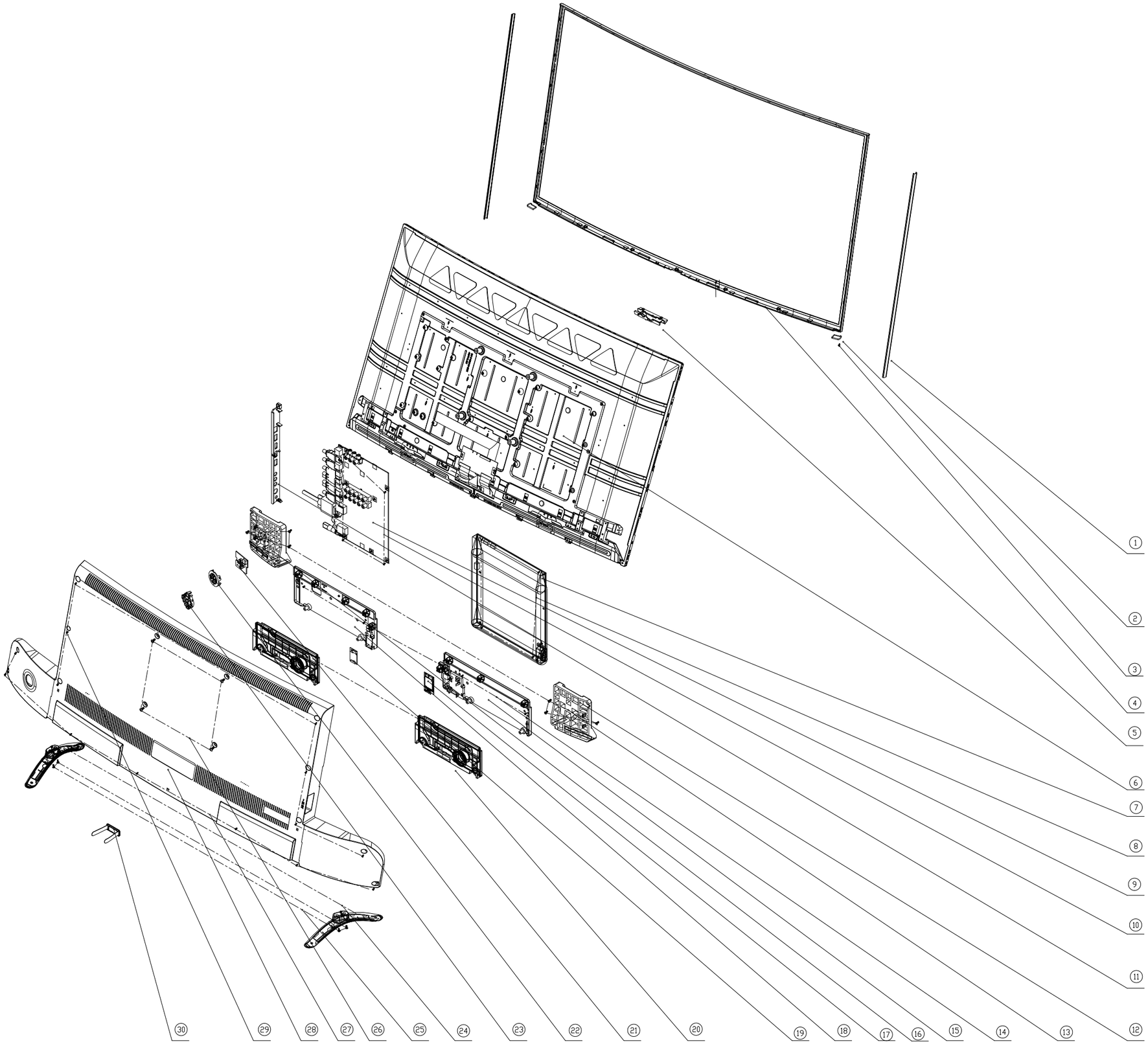

No. 序号	Description 名 称	Code No. 物料编号	Material 材 料	Qty's 数量	Remark 备 注
30	Bar Black	57-539210-10001		1	
29	Screw	63-W3008T-BF5G		1	
28	Back Cover	55-550260-1HA6R	ABS	1	
27	Screw	64-W30080-105G		13	
26	Screw	64-C60120-105G		4	
25	Screw	64-B50350-1H5G		4	
24	stand	68-545880-0001B	PC+ABS	2	
23	Key	56-474710-0UK1AG	ABS	1	
22	Key-support	56-474720-0UK6RG	ABS	1	
21	IR PCB	08-40D2701-IR300AA		1	
20	Speaker	42-WDF318-XX1G		2	
19	Bluetooth PCB	07-RT8761-BT1G		1	
18	Speaker support L	62-550180-0HN	HIPS	1	
17	WIFI PCB	07-MT7603-MA2G		1	
16	stand support L	56-546290-2HJ6R	ABS+10%GF	1	
15	Speaker support R	62-550190-0HN	HIPS	1	
14	Screw	64-B30060-104G		4	
13	Screw	64-B40080-104G		6	
12	stand support R	56-546300-2HJ6R	ABS+10%GF	1	
11	DEC SUPPORT SAV	56-54125C-0HN6R	HIPS	1	
10	Screw	64-B30060-104G		5	
9	ASS'Y-MAIN BD	08-MT56006-MA200AA		1	
8	Screw	64-B30060-104G		4	
7	POWER LE921A6	08-LE921A6-PW210AA		1	
6	DEC SUPPORT BACK	67-742840-4BE01	SECC	1	
5	DEC LENS IR	56-483620-1WH5ZG	PC	1	
4	DEC FRONTPANEL	55-546230-1HJ1A	ABS+10%GF	1	
3	Screw	64-S25030-205G		2	
2	DEC DECOR BAR	56-546250/60-0VHL1	JH820	1/1	
1	DEC DECOR BAR	57-547390-5HA01	PC	2	

投影方法		产品型号	48P1-CUD		
标记	数量	更改单号	签名	日期	
设 计	张涛	EXPLODE	WP		
审 核					
会 签			等级标记	质量	比例
标准化		一般线性：± 0.1	第 1 页	共 1 页	
批 准		公差角度：± 0.5°	单机用量		

WORK INSTRUCTION

TCL Multimedia AOE

File No.:	PN15-B-009	Rev.
Issue Date:	2015/12/28	1.0
Modified Date:		

Customer		Model	C48P1FS/MT56CT-AP	BOM	H3-48P10EX-SCNA0AA	Ass'y No.		Total NO.	15	Section	Final assemble

File No.	Updated Rev.	NO.	Oper. Name	Q'ty(S)	Modified Record	Modifier
PN15-B-009	1.0		Content		Initial version. Packing is only for reference.	XISHA
PN15-B-009	1.0	Flow chart	Flow Chart			
PN15-B-009	1.0	0	PREVIEW			
PN15-B-009	1.0	1	PREPROCESS			
PN15-B-009	1.0	2	PREPROCESS			
PN15-B-009	1.0	3	PREPROCESS			
PN15-B-009	1.0	4	PREVIEW			
PN15-B-009	1.0	5	MA & PSU			
PN15-B-009	1.0	6	WIRE			
PN15-B-009	1.0	7	SPEAKER HOLDER			
PN15-B-009	1.0	8	STAND SUPPORT			
PN15-B-009	1.0	9	SMALL BOARDS			
PN15-B-009	1.0	10	FIX WIRES			
PN15-B-009	1.0	11	INSERT WIRES			
PN15-B-009	1.0	12	RC			
PN15-B-009	1.0	13	PASTE			
PN15-B-009	1.0	14	ATTACHMENT			
PN15-B-009	1.0	15	PACKING			

Prepared：XISHA YANG **Approved by：**

TCL Multimedia AOE

WORK INSTRUCTION

Model	C48P1FS/MT56CT-AP	BOM	H3-48P10EX-SCNA0AA	FILE NO.	PN15-B-009	Oper NO.	Flow chart	Issue Date:	2015/12/28
Ass'y No.		Oper. Name	Flow Chart	Person.Q'ty		Oper.ST		Modified Date:	

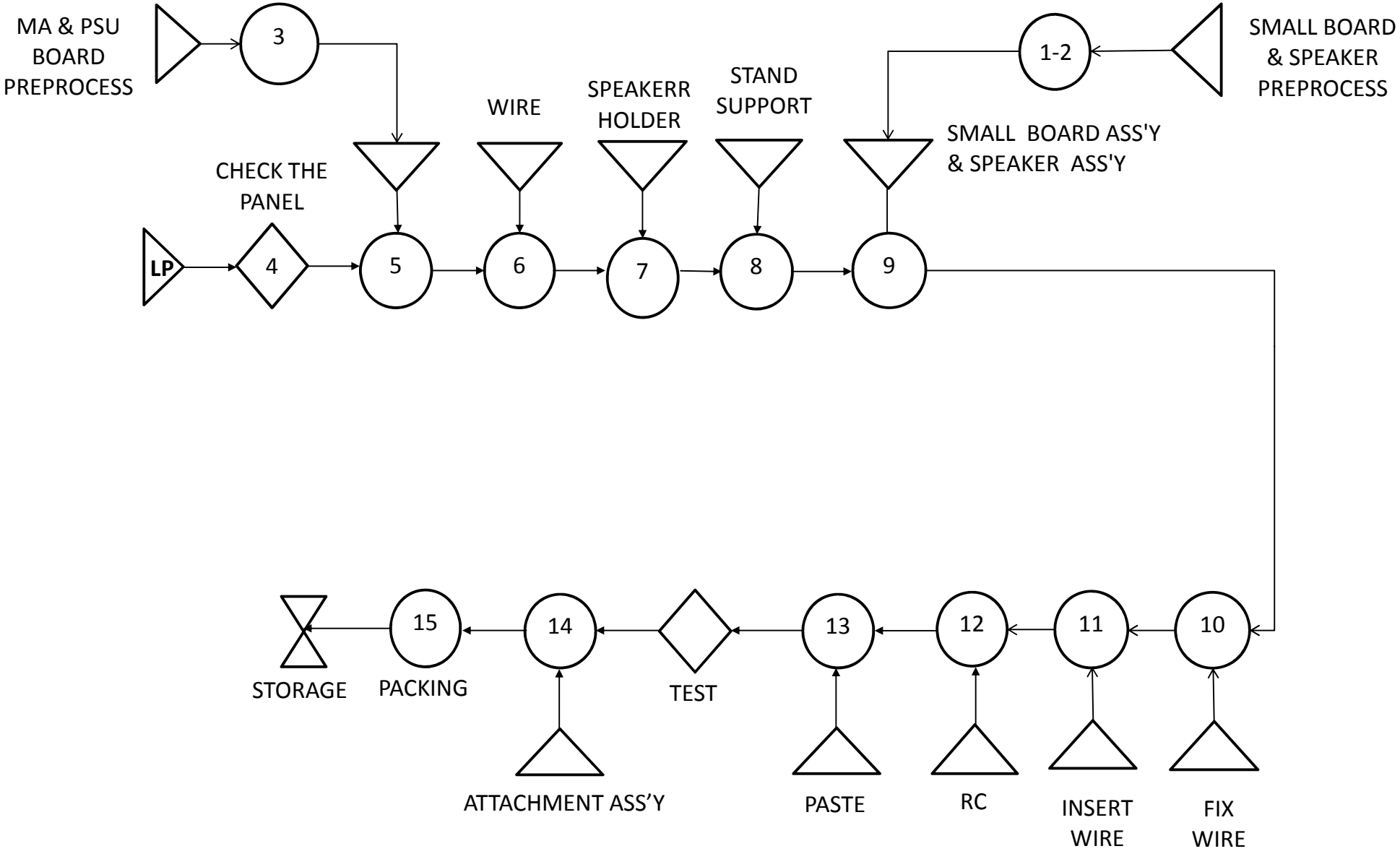

TCL Multimedia AOE			WORK INSTRUCTION					page: 0	
								Rev: 1.0	
Model	C48P1FS/MT56CT-AP	BOM	H3-48P10EX-SCNA0AA	FILE NO.	PN15-B-009	Oper NO.	0	Issue Date：	2015/12/28
Ass'y No.		Oper. Name	PREVIEW	Person.Q'ty		Oper.ST		Modified Date：	
Picture		NO.	Part Number	Q'ty	PROCESS DESCRIPTION			Oper.Parameter	Remark

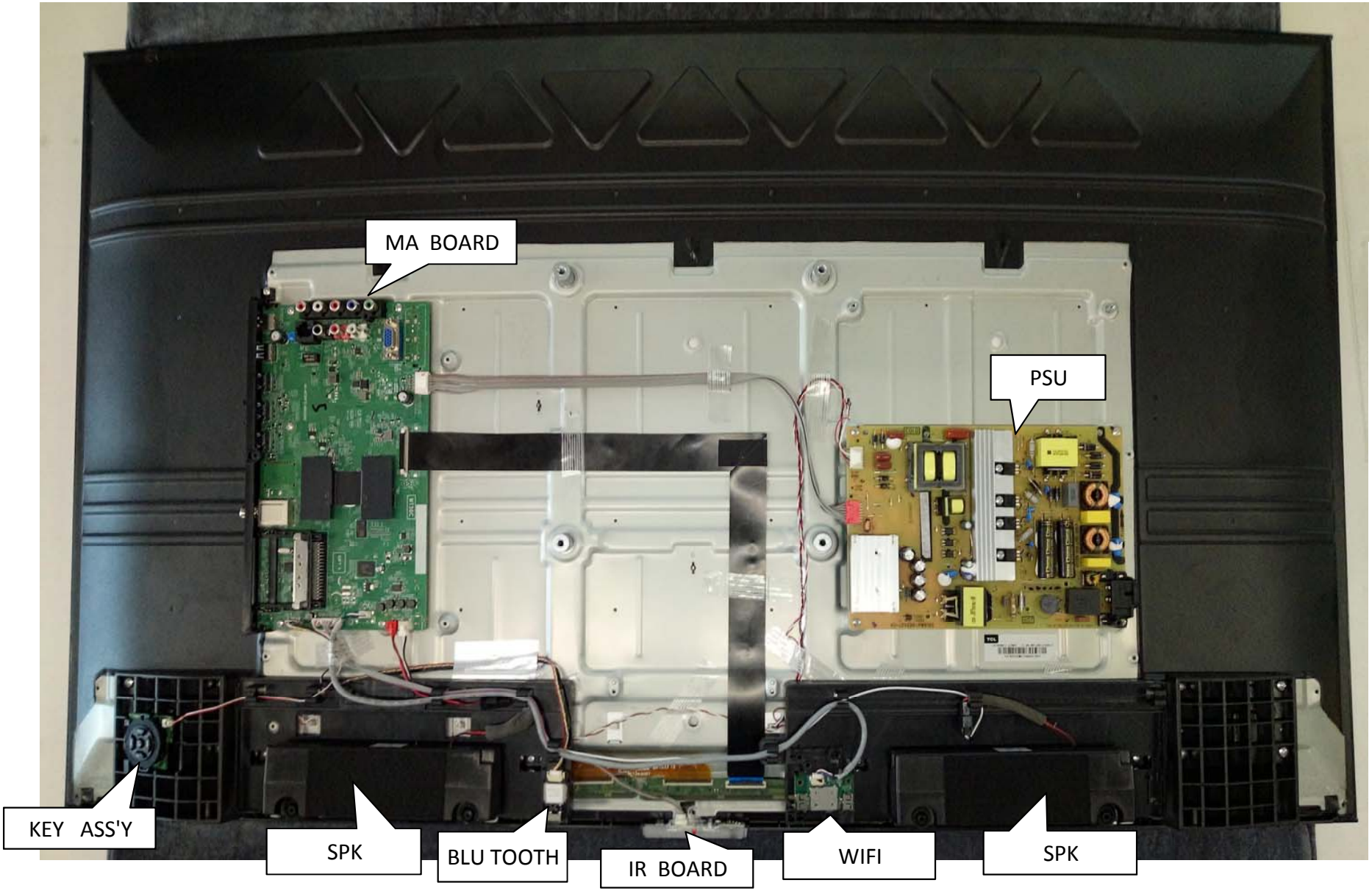

TCL Multimedia AOE			**WORK INSTRUCTION**						page: 2
									Rev: 1.0
Model	C48P1FS/MT56CT-AP	BOM	H3-48P10EX-SCNA0AA	FILE NO.	PN15-B-009	Oper NO.	1	Issue Date：	2015/12/28
Ass'y No.		Oper. Name	PREPROCESS	Person.Q'ty		Oper.ST		Modified Date：	

Picture	NO.	Part Number	Q'ty	PROCESS DESCRIPTION	P1S MT56C	Oper.Parameter	Remark
	1	42-WDF318-XX1G	2	Speaker			
	2	46-CV055L-02J01G	1	left speaker wire			
	3	46-BV010L-02J01G	1	right Speaker wire			
	4	46-FM020L-02P01G	1	key wire			
	5	56-474710-0HA03	1	key			
	6	56-474720-0HA6R	1	key holder			
	7	08-55P1001-KE300AA	1	key board			
	Attentions						

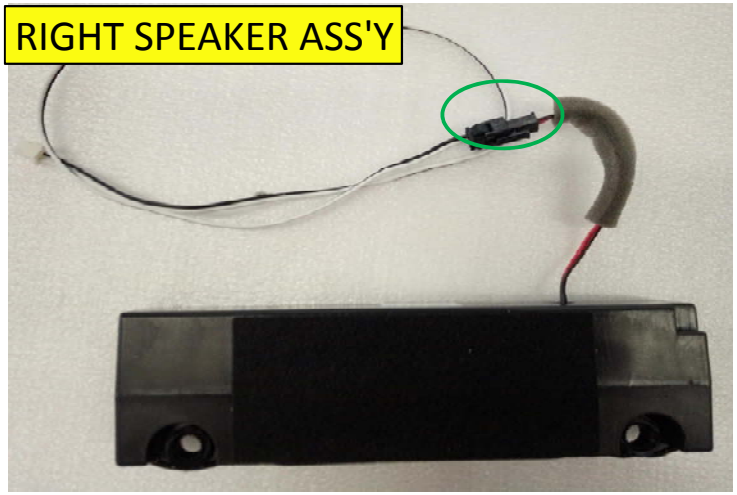

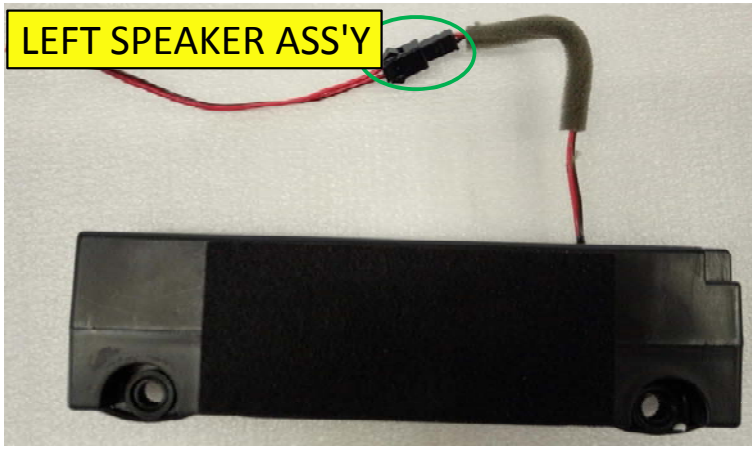

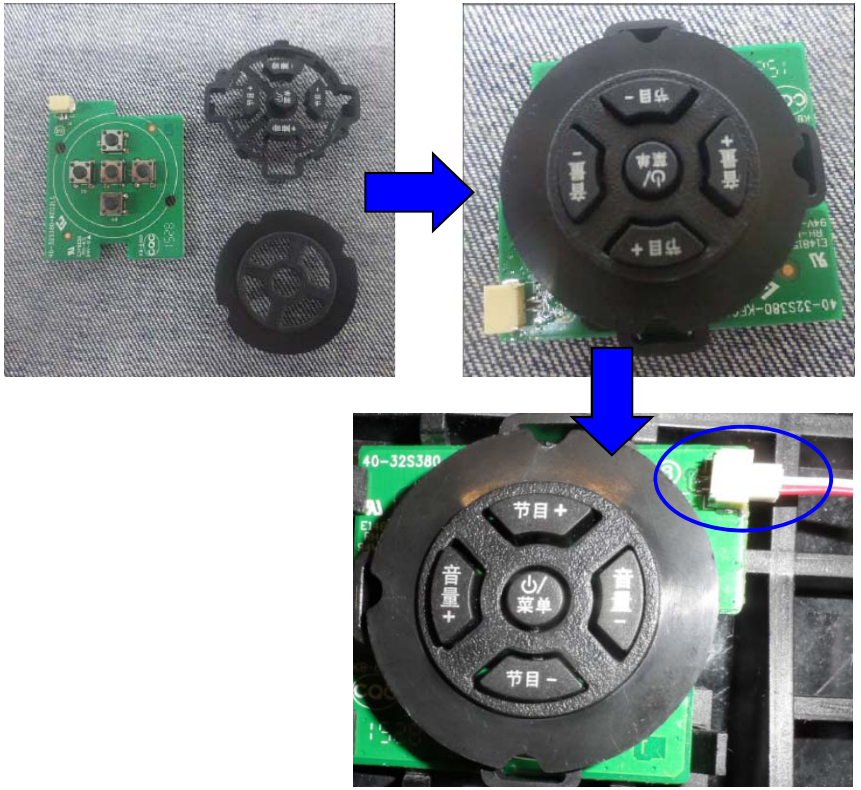

TCL Multimedia AOE			**WORK INSTRUCTION**					page:	2
								Rev:	1.0
Model	C48P1FS/MT56CT-AP	BOM	H3-48P10EX-SCNA0AA	FILE NO.	PN15-B-009	Oper NO.	2	Issue Date：	2015/12/28
Ass'y No.		Oper. Name	PREPROCESS	Person.Q'ty		Oper.ST		Modified Date：	

Picture	NO.	Part Number	Q'ty	PROCESS DESCRIPTION	P1S MT56C	Oper.Parameter	Remark
	1	56-483620-1VH5Z	1	Lens			
	2	08-40D2701-IR300AA	1	IR board			
	3	46-FM035L-05W01G	1	IR wire			
	4	07-MT7603-MA1G	1	WIFI board			
	5	46-MM060L-05X01G	1	WIFI wire			
	6	07-RT8761-BT0G	1	BULTOOTH board			
	7	46-MM035L-06P02G	1	BULTOOTH wire			
	Attentions						

IR ASS'Y

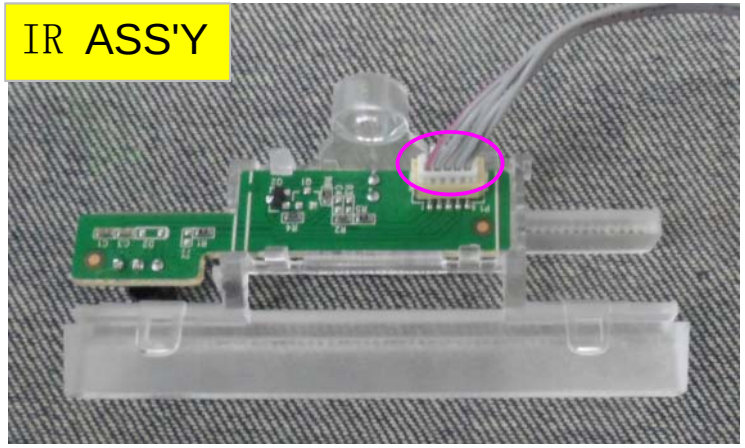

WIFI ASS'Y

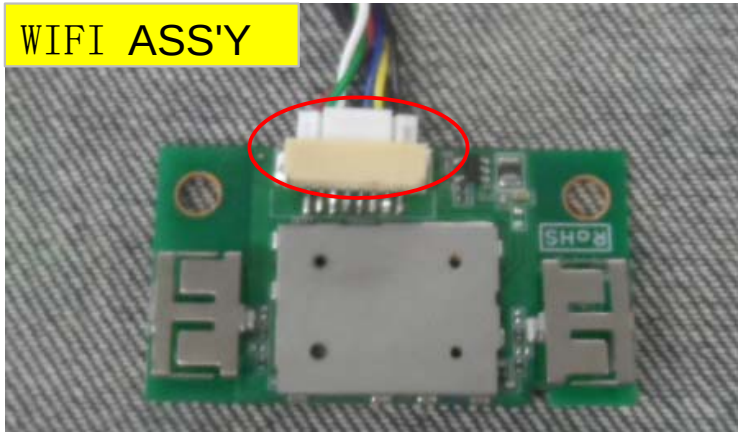

BLUTOOTH ASS'Y



TCL Multimedia AOE			**WORK INSTRUCTION**					page: 3	
								Rev: 1.0	
Model	C48P1FS/MT56CT-AP	BOM	H3-48P10EX-SCNA0AA	FILE NO.	PN15-B-009	Oper NO.	3	Issue Date:	2015/12/28
Ass'y No.		Oper. Name	PREPROCESS	Person.Q'ty		Oper.ST		Modified Date:	

Picture	NO.	Part Number	Q'ty	PROCESS DESCRIPTION	P1S MT56CT	Oper.Parameter	Remark
	1	08-MT56006-MA200AA	1	MAIN BOARD			
	2	56-54125C-0HN6R	1	SIDE AV HOLDER			
	3	58-54316C-3HD1A	1	Overlay the side AV paste to the side AV holder			
	4	5E-071512-0U2	2	Conductive form for back of MA			
	5			Assemeble the side AV holder and MA together			
	6						
	7						
	Attentions						

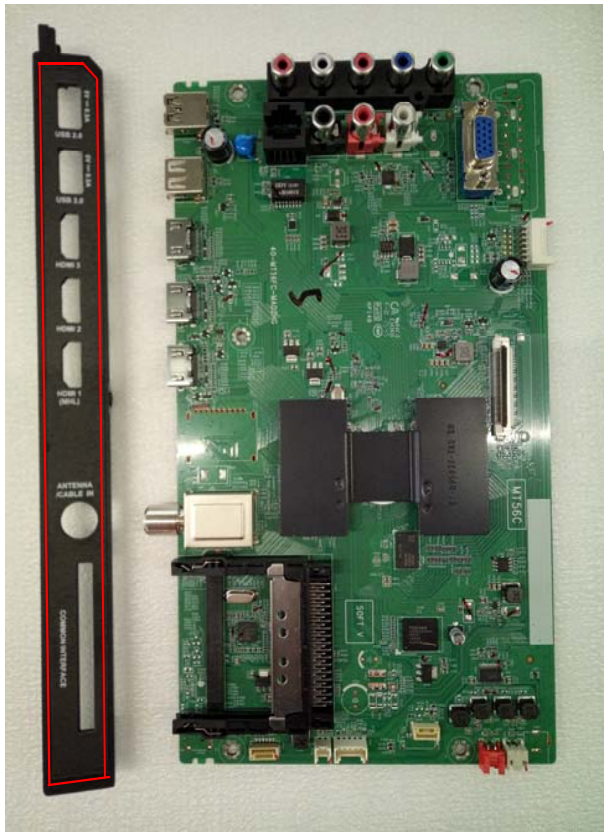

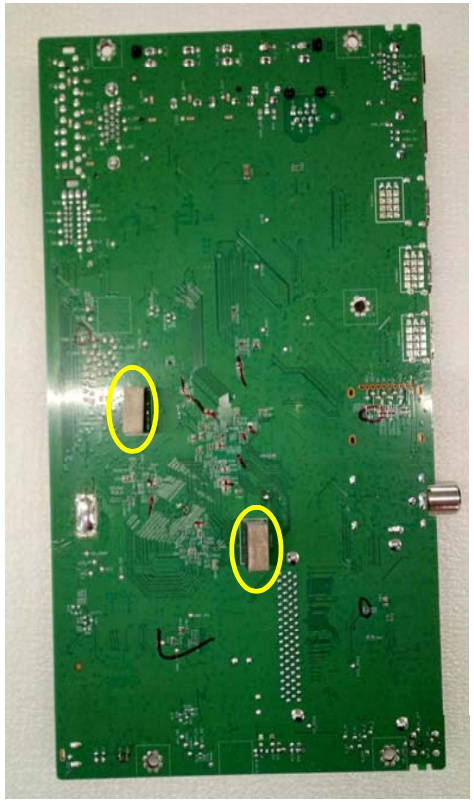



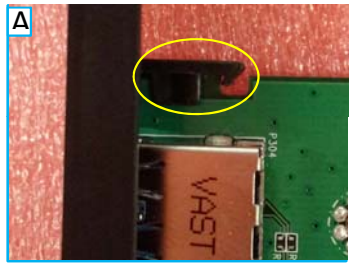

THE SIDE AV HOLDER MUST ASSEMEBLE IN PLACE

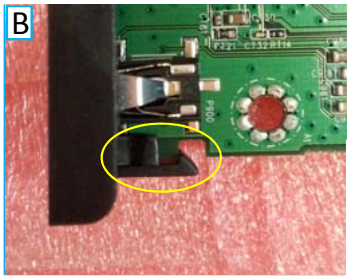

TCL Multimedia AOE			WORK INSTRUCTION						page: 4	
									Rev: 1.0	
Model	C48P1FS/MT56CT-AP	BOM	H3-48P10EX-SCNA0AA	FILE NO.	PN15-B-009	Oper NO.	4	Issue Date：		2015/12/28
Ass'y No.		Oper. Name	PREVIEW	Person.Q'ty		Oper.ST		Modified Date：		
Picture		NO.	Part Number	Q'ty	PROCESS DESCRIPTION			1S MT56C	Oper.Parameter	Remark
		1	08-48P1000-LPM002A	1	Fetch the panel to cushion					
		2	5M-FYFM60-130	1	Paste the MALAR to the graphic location					
		3								
		4								
		5								
		6								
		Attentions								

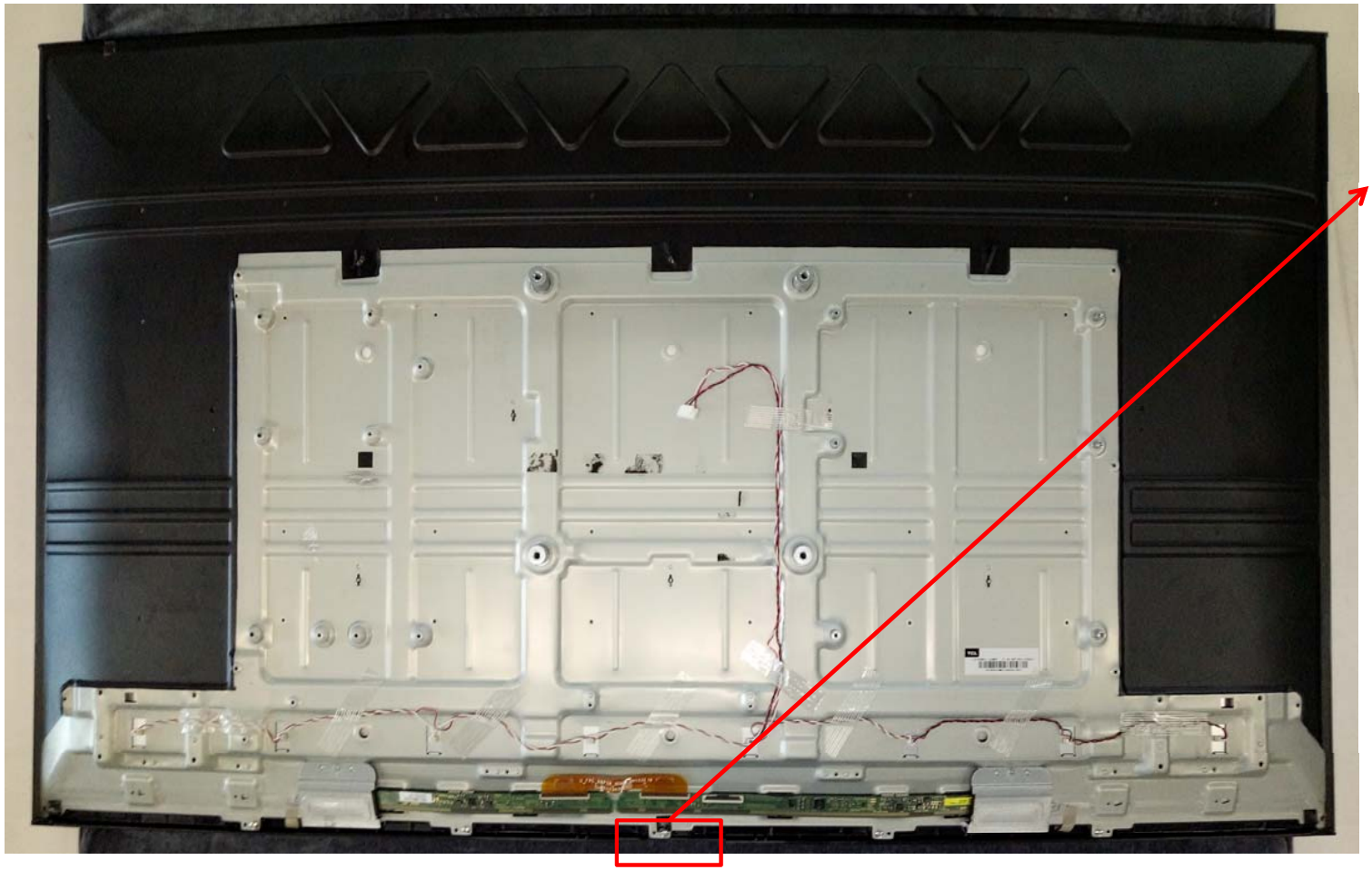

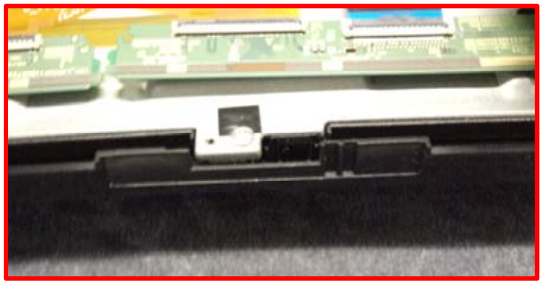

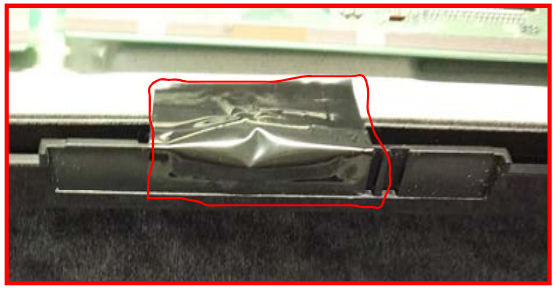

TCL Multimedia AOE			WORK INSTRUCTION					page:	5
								Rev:	1.0
Model	C48P1FS/MT56CT-AP	BOM	H3-48P10EX-SCNA0AA	FILE NO.	PN15-B-009	Oper NO.	5	Issue Date：	2015/12/28
Ass'y No.		Oper. Name	MA & PSU	Person.Q'ty		Oper.ST		Modified Date：	

Picture	NO.	Part Number	Q'ty	PROCESS DESCRIPTION	P1S MT56C	Oper.Parameter	Remark
	1	MA ASS'Y	1				CAUTION STATIC SENSITIVE DEVICES 请注意 静电防护
	2	08-LC9219E-PW200AA	1	PSU			
	3	57-971650-7UG	3	SPACER COLUMN to hold K4、K5、K6 in PSU			
	4	64-B30050-204G	8	Fix the MA & PSU to panel		3.5±0.5kgf·cm	
	5	64-B30060-104G	1	Fix the side AV holder to panel		3.5±0.5kgf·cm	
	6						
	7						
	Attentions						

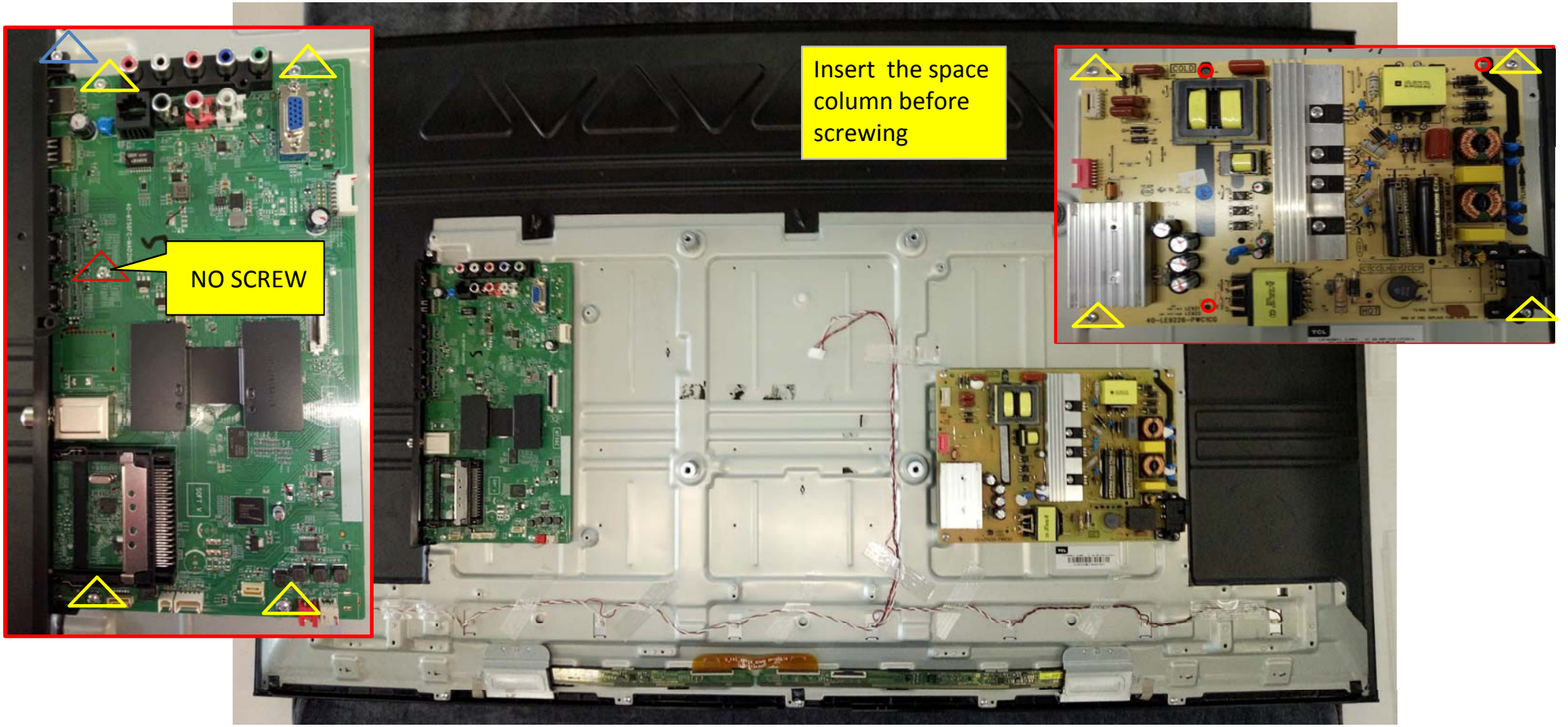

TCL Multimedia AOE			WORK INSTRUCTION						page: 6	
									Rev: 1.0	
Model	C48P1FS/MT56CT-AP	BOM	H3-48P10EX-SCNA0AA	FILE NO.	PN15-B-009	Oper NO.	6	Issue Date：		2015/12/28
Ass'y No.		Oper. Name	WIRE	Person.Q'ty		Oper.ST		Modified Date：		

Picture	NO.	Part Number	Q'ty	PROCESS DESCRIPTION	P15S MT56C	Oper.Parameter	Remark
	1	46-LL040L-14T03G	1	DC wire			
	2	46-YY555C-51Z01G	1	LVDS wire			
	3			Insert the DC & LVDS & LB wires			
	4	89-0FF030-JZ0U	7cm*3	Fix the wire to panel			
	5						
	6						
	Attentions	TIRE OFF THE PAPER OF LVDS WIRE BACK SIDE,AND PRESS					

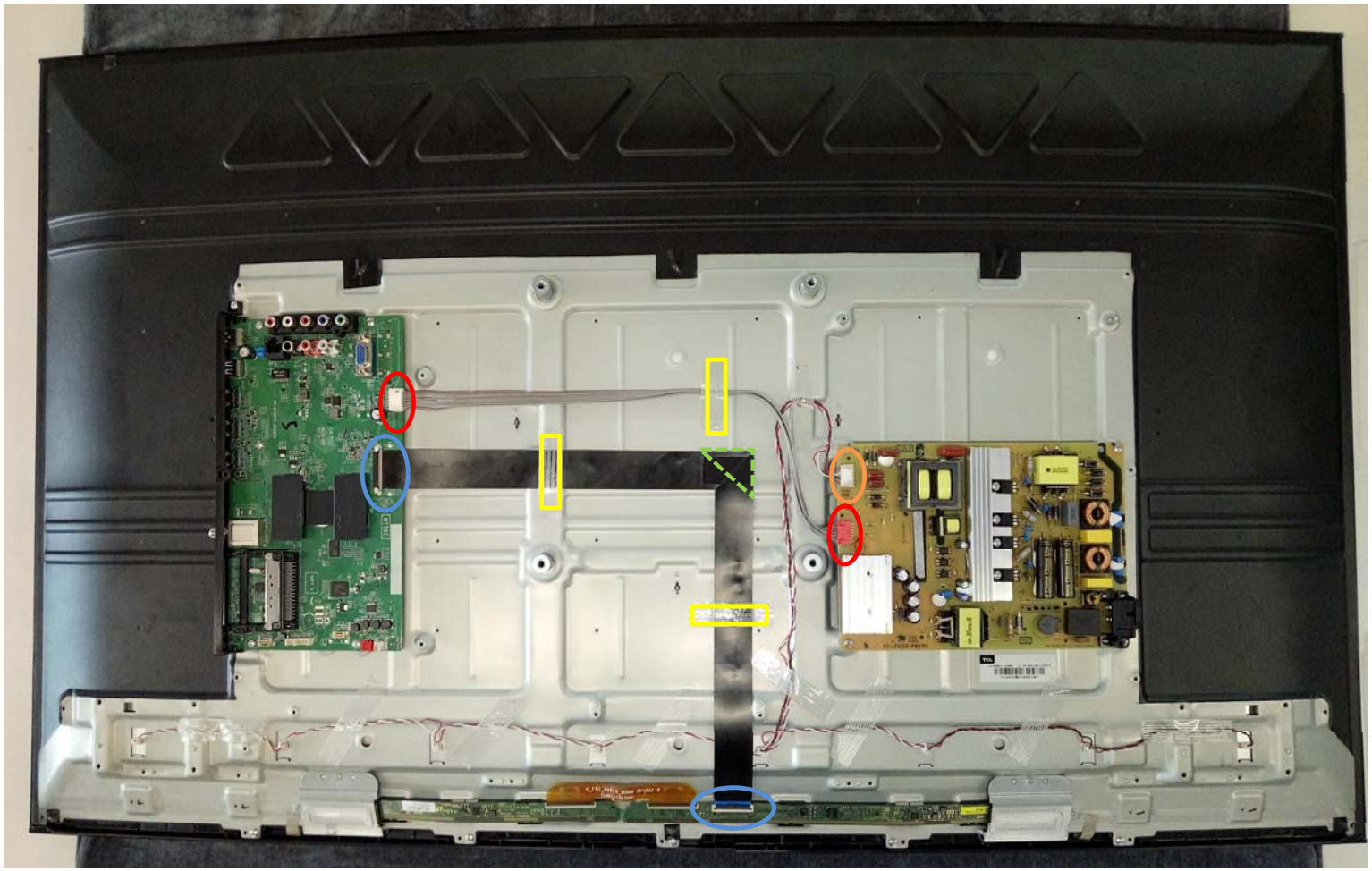

TCL Multimedia AOE			WORK INSTRUCTION					page: 7	
								Rev: 1.0	
Model	C48P1FS/MT56CT-AP	BOM	H3-48P10EX-SCNA0AA	FILE NO.	PN15-B-009	Oper NO.	7	Issue Date:	2015/12/28
Ass'y No.		Oper. Name	Speaker support	Person.Q'ty		Oper.ST		Modified Date:	

Picture	NO.	Part Number	Q'ty	PROCESS DESCRIPTION	1S MT56C	Oper.Parameter	Remark
	1	62-550190-0HN	1	RIGHT SPEAKER SUPPORT			
	2	62-550180-0HN	1	LEFT SPEAKER SUPPORT			
	3	64-B30060-104G	4	Fix the SPEAKER SUPPORTS to panel		3.5±0.5kgf·cm	
	4						
	5						
	6						
	Attentions						

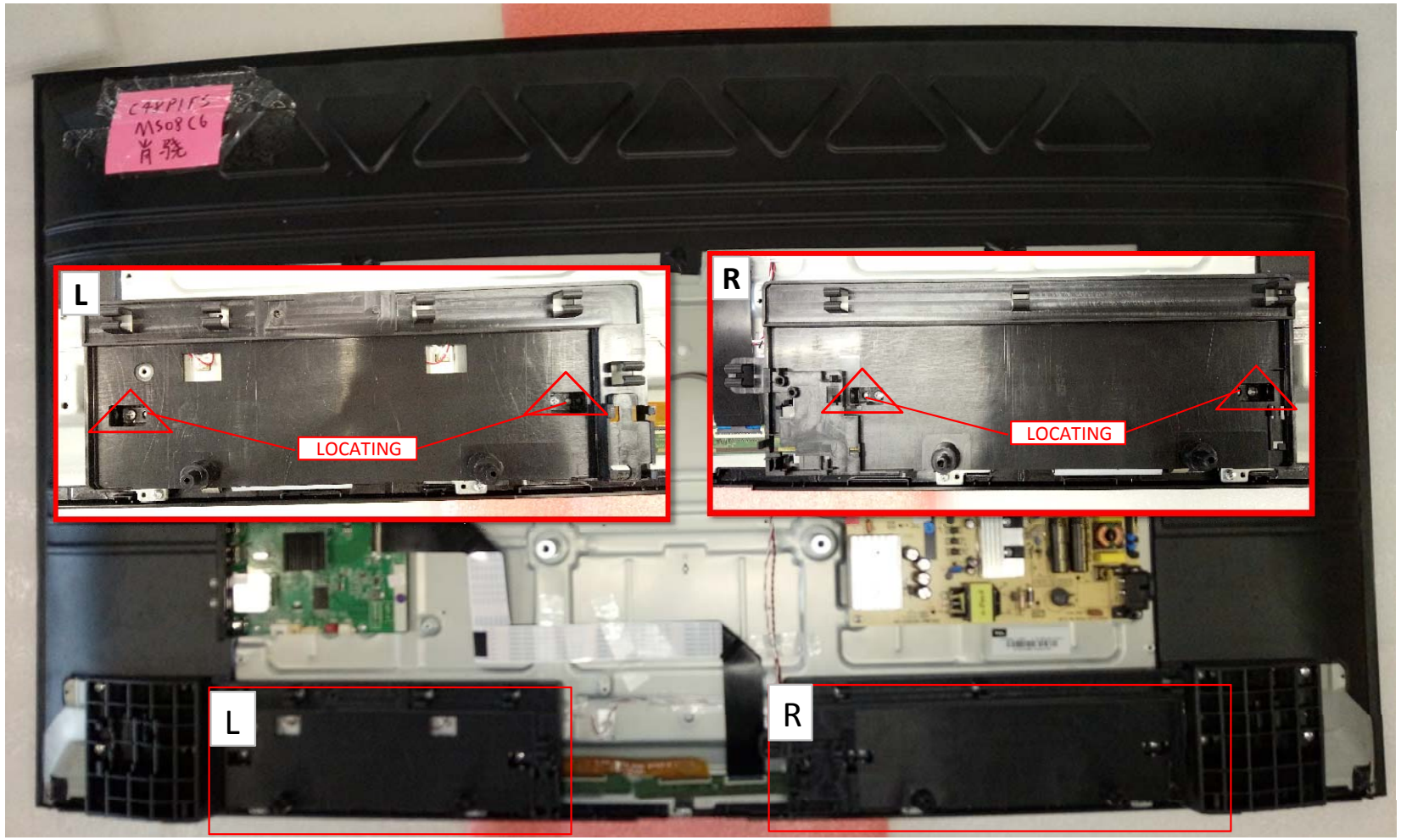

TCL Multimedia AOE			WORK INSTRUCTION					page:	8
								Rev:	1.0
Model	C48P1FS/MT56CT-AP	BOM	H3-48P10EX-SCNA0AA	FILE NO.	PN15-B-009	Oper NO.	8	Issue Date：	2015/12/28
Ass'y No.		Oper. Name	Stand support	Person.Q'ty		Oper.ST		Modified Date：	

Picture	NO.	Part Number	Q'ty	PROCESS DESCRIPTION	1S MT56C'	Oper.Parameter	Remark
	1	56-546300-0HJ6R	1	RIGHT STAND SUPPORT			
	2	56-546290-0HJ6R	1	LEFT STAND SUPPORT			
	3	64-B40080-104G	8	Fix the STAND SUPPORT to panel		5.0±1.0kgf·cm	
	4						
	5						
	6						
	Attentions						

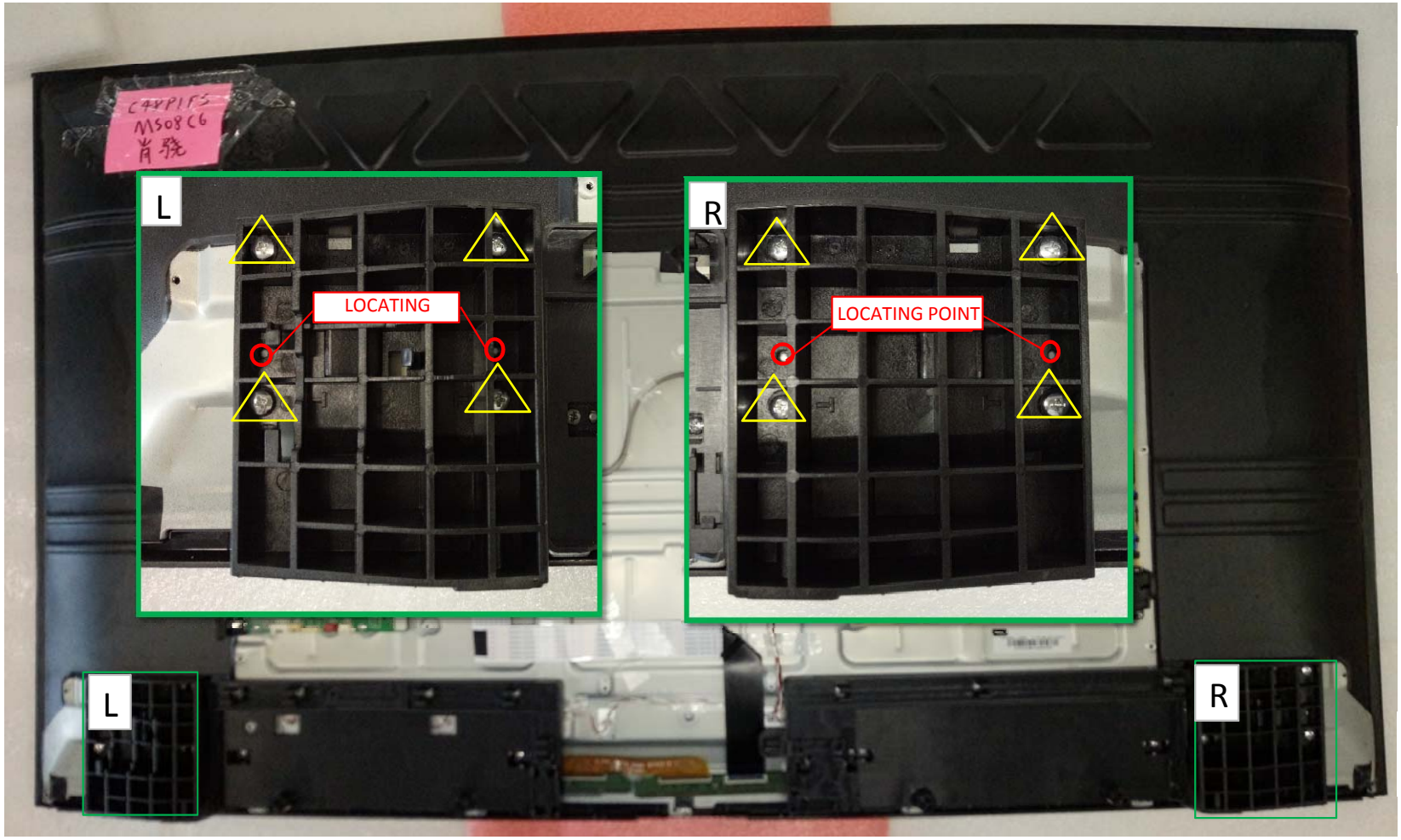

TCL Multimedia AOE			WORK INSTRUCTION					page:	9
								Rev:	1.0
Model	C48P1FS/MT56CT-AP	BOM	H3-48P10EX-SCNA0AA	FILE NO.	PN15-B-009	Oper NO.	9	Issue Date:	2015/12/28
Ass'y No.		Oper. Name	small board	Person.Q'ty		Oper.ST		Modified Date:	

Picture	NO.	Part Number	Q'ty	PROCESS DESCRIPTION	1S MT56C	Oper.Parameter	Remark
	1	KEY ASS'Y	1				
	2	LEFT SPEAKER ASS'Y	1				
	3	IR ASS'Y	1				
	4	BLUTOOTH ASS'Y	1				
	5	WIFI ASS'Y	1				
	6	RIGHT SPEAKER ASS'Y	1				
	Attentions						

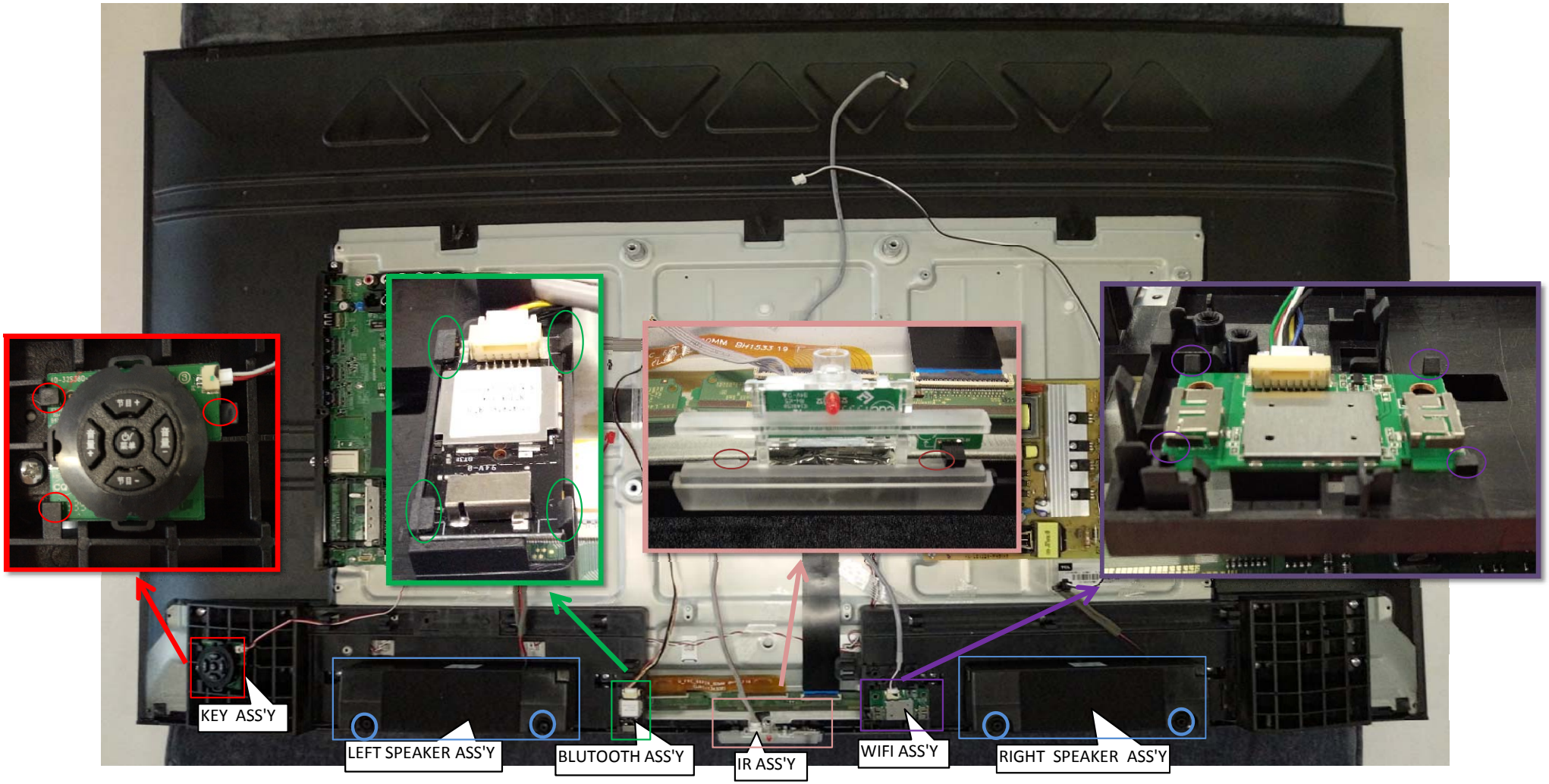

TCL Multimedia AOE			WORK INSTRUCTION						page: 10	
									Rev: 1.0	
Model	C48P1FS/MT56CT-AP	BOM	H3-48P10EX-SCNA0AA	FILE NO.	PN15-B-009	Oper NO.	10	Issue Date：		2015/12/28
Ass'y No.		Oper. Name	Fix wire	Person.Q'ty		Oper.ST		Modified Date：		
Picture		NO.	Part Number	Q'ty	PROCESS DESCRIPTION			1S MT56C	Oper.Parameter	Remark
		1			Lay all the possible wire to the snap joint					
		2								
		3								
		4								
		5								
		6								
		7								
		Attentions								

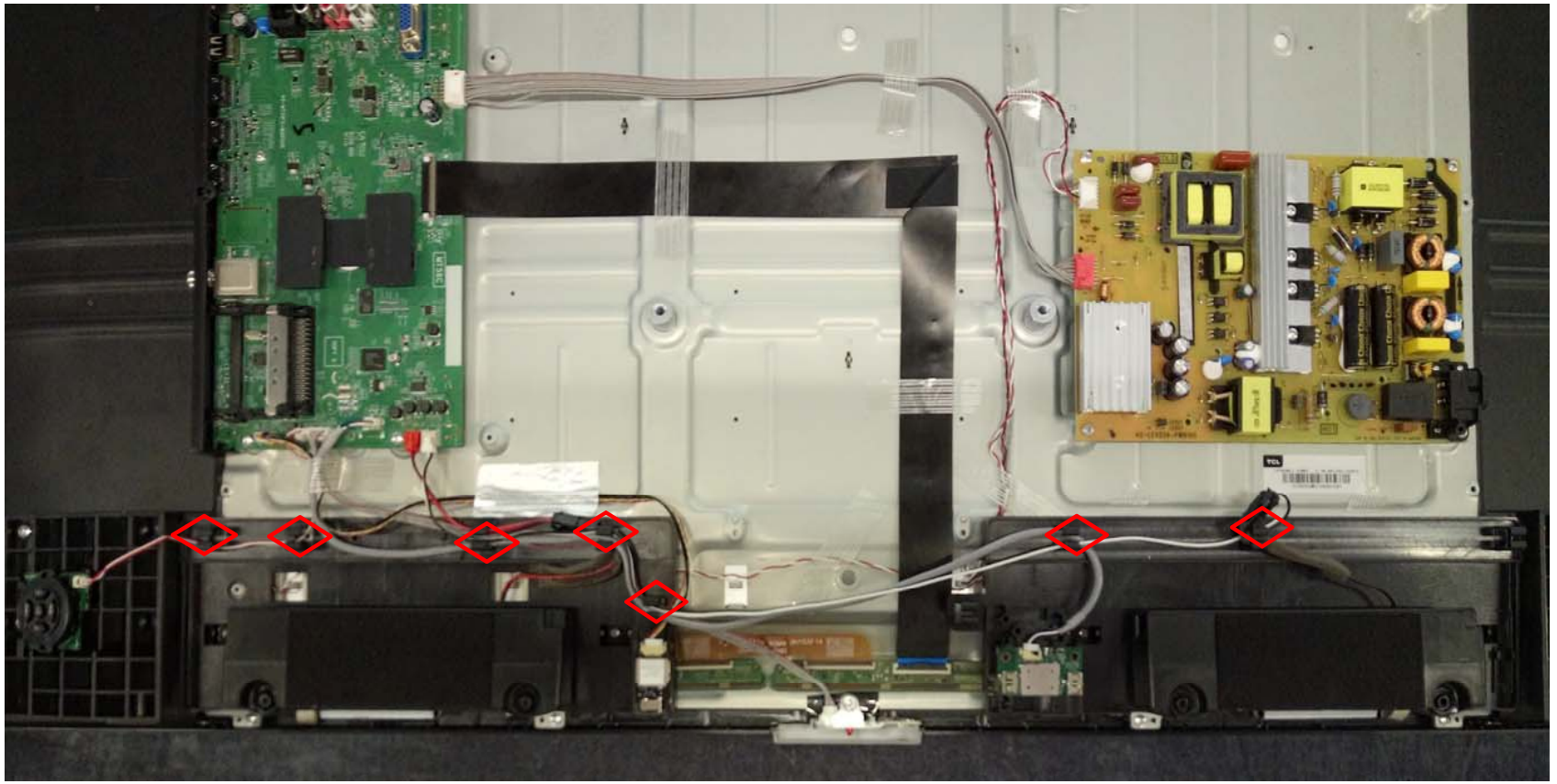

TCL Multimedia AOE			WORK INSTRUCTION					page: 11	
								Rev: 1.0	
Model	C48P1FS/MT56CT-AP	BOM	H3-48P10EX-SCNA0AA	FILE NO.	PN15-B-009	Oper NO.	11	Issue Date：	2015/12/28
Ass'y No.		Oper. Name	INSERT WIRE	Person.Q'ty		Oper.ST		Modified Date：	

Picture	NO.	Part Number	Q'ty	PROCESS DESCRIPTION	P15S MT56C	Oper.Parameter	Remark
	1			Insert all the wire into right receptacle			
	2	54-EJ0030-3U2	1	Fix the WIFI wire with the aluminum foil tape			
	3	89-0FF030-JZ0U	10cm*1	Fix the wire to the panel			
	4						
	5						
	6						
	7						
	Attentions						

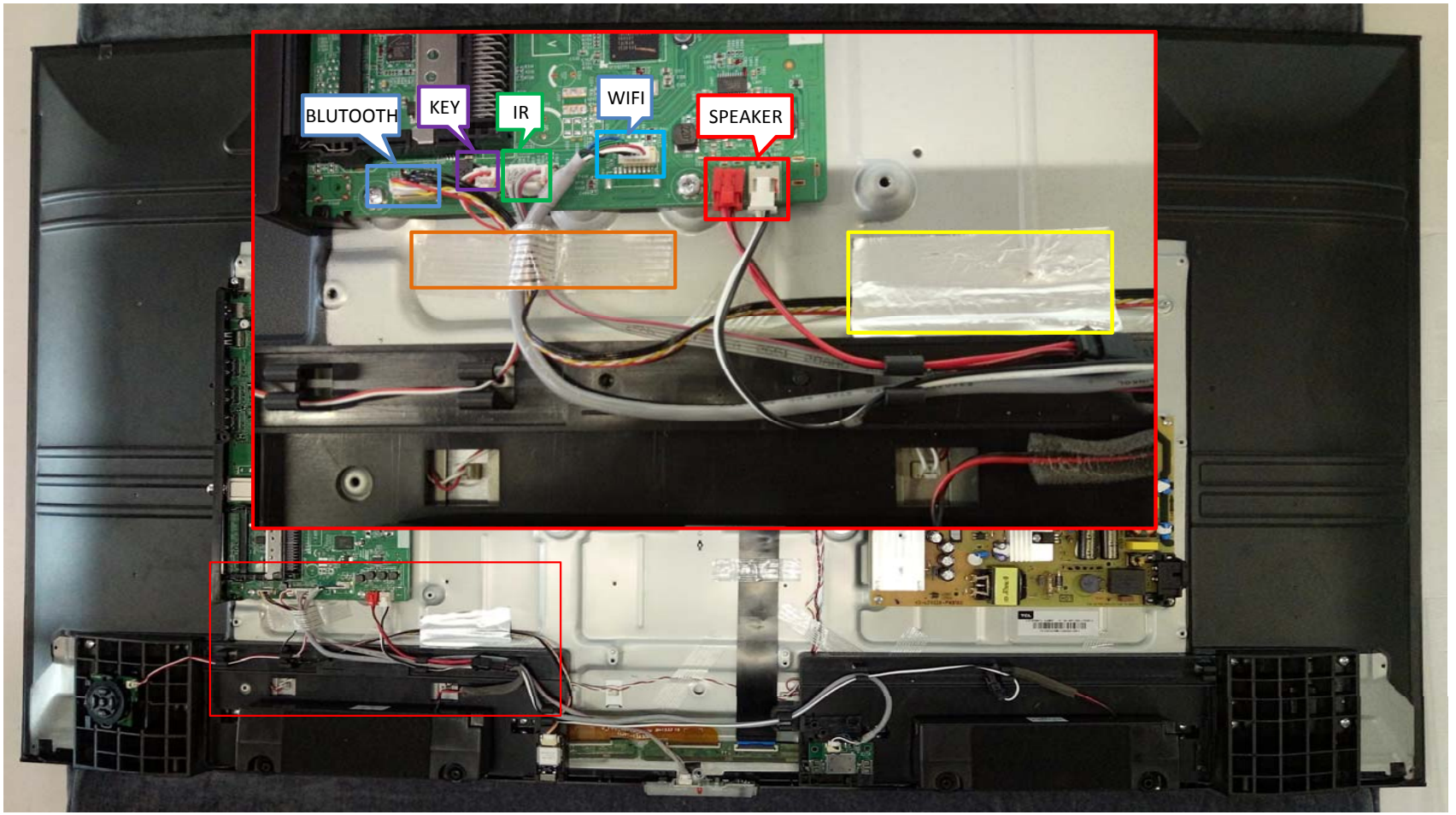

TCL Multimedia AOE			WORK INSTRUCTION					page:	12
								Rev:	1.0
Model	C48P1FS/MT56CT-AP	BOM	H3-48P10EX-SCNA0AA	FILE NO.	PN15-B-009	Oper NO.	12	Issue Date：	2015/12/28
Ass'y No.		Oper. Name	FIX RC	Person.Q'ty		Oper.ST		Modified Date：	

Picture	NO.	Part Number	Q'ty	PROCESS DESCRIPTION	1S MT56C	Oper.Parameter	Remark
	1	55-550260-1HA6R	1	RC			
	2	64-W30060-105G	9	Fix the RC to panel	△	3.5±0.5kgf·cm	
	3	64-W30080-105G	4	Fix the RC to panel	△	5.0±1.0kgf·cm	
	4	64-C60120-105G	4	Fix the RC to panel	△	10.0±2.0kgf·cm	
	5	63-W3008T-BF5G	1	Fix the RC to side AV holder	○	5.0±1.0kgf·cm	
	6						
	Attentions						



TCL Multimedia AOE			WORK INSTRUCTION					page: 13	
								Rev: 1.0	
Model	C48P1FS/MT56CT-AP	BOM	H3-48P10EX-SCNA0AA	FILE NO.	PN15-B-009	Oper NO.	13	Issue Date：	2015/12/28
Ass'y No.		Oper. Name	PASTE	Person.Q'ty	1	Oper.ST		Modified Date：	

Picture	NO.	Part Number	Q'ty	PROCESS DESCRIPTION	P15-B-009 MT56CT-AP	Oper.Parameter	Remark
	1	58-48P1MP-0HD1B	1	WARNNING PASTE			
	2	58-542970-4HD1B	1	BACK PASTE			
	3		1	TV LABEL			
	4						
	5						
	6						
	Attentions						



TCL Multimedia AOE			**WORK INSTRUCTION**						page:	14
									Rev:	1.0
Model	C48P1FS/MT56CT-AP	BOM	H3-48P10EX-SCNA0AA	FILE NO.	PN15-B-009	Oper NO.	14	Issue Date：		2015/12/28
Ass'y No.		Oper. Name	ATTACHMENT	Person.Q'ty	1	Oper.ST		Modified Date：		

Picture	NO.	Part Number	Q'ty	PROCESS DESCRIPTION	1S MT56C	Oper.Parameter	Remark
	1						
	2						
	3						
	4						
	5						
	6						
	Attentions						



bag: 74-008010-12CR 1pc
screw: 64-B50350-1H5G 4pc

bag: 74-022032-5WEWW 1pc
sheet: 72-MT56AB-EAP1B 1pc
70-STDP1S-EEM1A 1pc
battery: 49-R03P80-BAT 2pcs
remote control: 06-IRPT53-CRC311 1pc
power line: 51-DC0150-0CR0LG 1pc
wire clasp:57-539210-00001 1pc

TCL Multimedia AOE			WORK INSTRUCTION						page: 15	
									Rev: 1.0	
Model	C48P1FS/MT56CT-AP	BOM	H3-48P10EX-SCNA0AA	FILE NO.	PN15-B-009	Oper NO.	15	Issue Date:		2015/12/28
Ass'y No.		Oper. Name	PACKING	Person.Q'ty		Oper.ST		Modified Date:		
Picture		NO.	Part Number	Q'ty	PROCESS DESCRIPTION			1S MT56C	Oper.Parameter	Remark
		1	74-135088-50KWW	1	WHOLE TV TECTORIAL BAG					
		2	75-551000-CC0	1	TOP POLYFOAM					
		3	75-551010-CC0	1	BOTTOM POLYFOAM					
		4	75-551020-CE0	1	Front EPE					
		5	76-547300-0AT	1	CARTON-BOX					
		6	68-545880-0001A	2	STAND ass'y					
		7								
		8								
		Attentions								

