Part No.514002100002
Rev: C
Nov. 2022

Operation Manual

TB20EJ Plus/TB660EJ Plus
TB22EJ Plus/TB740EJ Plus

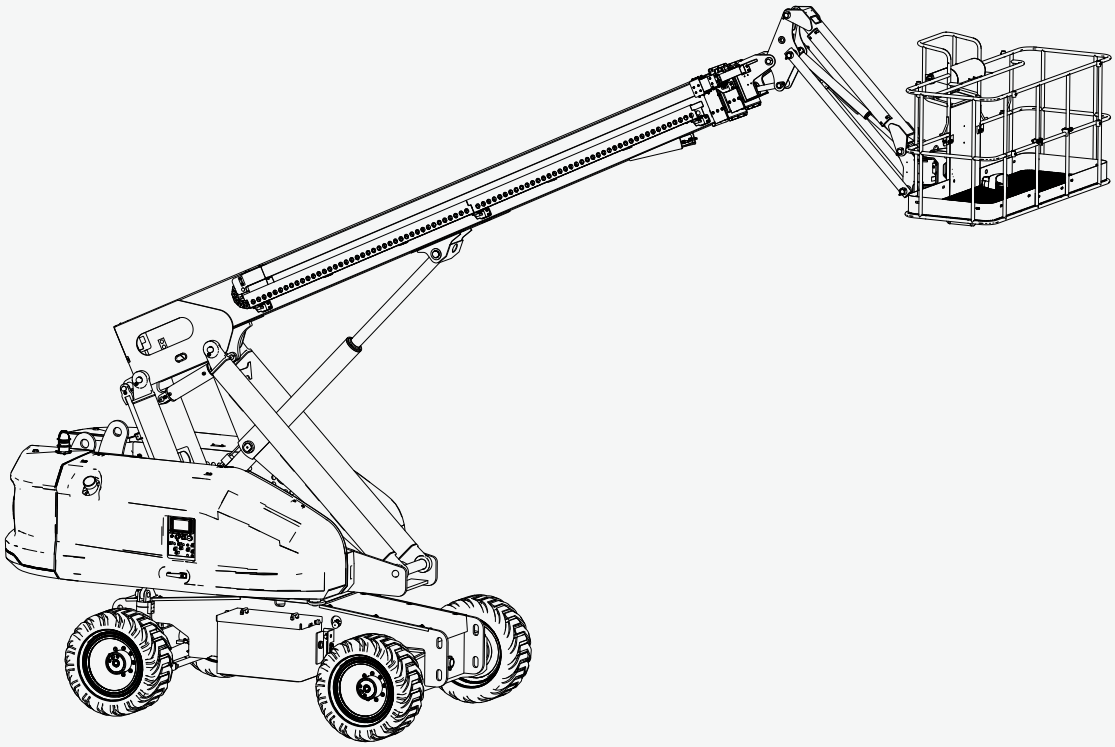

SINOBOOM

⚠ WARNING

Operating, servicing and maintaining this vehicle or equipment can expose you to chemicals including engine exhaust, carbon monoxide, phthalates, and lead, which are known to the State of California to cause cancer and birth defects or other reproductive harm. To minimize exposure, avoid breathing exhaust, do not idle the engine except as necessary, service your vehicle or equipment in a well-ventilated area and wear gloves or wash your hands frequently when servicing. For more information go to: www.P65warnings.ca.gov.
For disposal, please follow your nation regulation.

Manual revision history:

REV	DATE	DESCRIPTION	REMARK
A	Oct, 2021	Original issue	
B	Mar, 2022	Revised version, changed to open-circuit variable displacement pump	
C	Nov. 2022	Updated manual, implemented the BS EN 280-1:2022 standard requirements, revised the logic description of drive speed select switch, etc.	

Please contact us:

Website : www.sinoboom.com

E-mail : sales@sinoboom.com

Sales Tel : 0086-0731-87116222

Service Tel : 0086-0731-87116333

Address : No.128, East Jinzhou Avenue, Ningxiang High-tech Industrial Park, Changsha, Hunan, China

Zip Code : 410600

Copyright © Hunan Sinoboom Intelligent Equipment Co., Ltd. All Rights Reserved

The final interpretation right of this manual belongs to Hunan Sinoboom Intelligent Equipment Co., Ltd.

APPLICABLE RANGE

Use the following table to identify the specific serial number for models included in this manual. Check the model of your machine before consulting the manual, and then use the correct manual according to the serial number of the model. See the nameplate on your machine to identify the model and serial number. (See ***Decals/Nameplate Inspection*** of the *Operation Manual* for details.)

Model	Trade Identification		Serial No.
	Metric	Imperial	
TB20EJ Plus	TB20EJ Plus	TB660EJ Plus	From 1400200282 to present
TB22EJ Plus	TB22EJ Plus	TB740EJ Plus	From 1400600414 to present

NOTE:

- Product model is applied in product nameplate for distinction of products of different main parameters.
- Product trade identification is applied in marketing and machine decals for distinction of products of different main parameters, and can be classified as metric type and imperial type: The metric trade identification is applicable to machines for countries/regions using metric system or as specially required by customers; The imperial trade identification is applicable to the machines for countries/regions using imperial system or as specially required by customers.

This Page Intentionally Left Blank

STATEMENTS

Hunan Sinoboom Intelligent Equipment Co., Ltd. (Hereinafter referred to as Sinoboom) will upload the latest product manual information to the website www.sinoboom.com as soon as possible. However, due to continuous product improvement, the information in this manual is subject to change without prior notice.

This manual covers the basic parts information of one or more products. Therefore, please use this manual according to your needs. If you find problems in the manual or have suggestions for improvement, feel free to share your feedback with Sinoboom, and we will address these issues as soon as possible.

Feel free to consult and download the *Operation Manual*, *Maintenance Manual* and *Parts Manual* of the products you need online at www.sinoboom.com.

Hunan Sinoboom Intelligent Equipment Co., Ltd. retains the right of final interpretation of the manual.

SINOBOOM

All of the above are registered trademarks of Hunan Sinoboom Intelligent Equipment Co., Ltd..

This Page Intentionally Left Blank

TABLE OF CONTENTS

Introduction iii

1 Machine Specifications 1-1

2 Machine Components 2-1

3 Safety 3-1

Safety Definitions 3-1
Reporting Accidents..... 3-1
Electrocution Hazards..... 3-2
Tipping Hazards and Rated Load 3-2
Jobsite Hazards..... 3-4
Unsafe Operation Hazards..... 3-6
Fall Hazards..... 3-7
Collision Hazards 3-7
Crush Hazards 3-8
Explosion and Fire Hazards..... 3-9
Damaged Machine Hazards 3-9
Bodily Injury Hazards 3-9
Battery Hazards..... 3-10
Hydraulic Hazards 3-12
Welding and Polishing Requirements 3-12
After Using the Machine..... 3-12

4 Jobsite Inspection..... 4-1

5 Pre-operation Inspection 5-1

Tips for Conducting a Pre-operation Inspection 5-1
Conducting a Pre-operation Inspection 5-2
Inspecting Parts..... 5-2
Inspecting Entire Machine 5-2
Inspect Hydraulic Oil Level..... 5-2
Inspecting the Battery..... 5-3
Check Battery Level..... 5-4

6 Pre-operation Function Test .. 6-1

Preparing for a Pre-operation Function Test..... 6-1
Testing the Ground Controller..... 6-1
Testing the Platform Controller..... 6-6
Testing the Drive Speed..... 6-12
Testing the Emergency Lowering Function..... 6-12
Testing the Tilt Protection System.... 6-13
Testing the Envelope Restriction..... 6-13
Testing the Weighing System 6-14

7 Operating the Machine 7-1

Stability..... 7-1
Emergency Stop 7-3
Emergency Lowering 7-4
Emergency Operating..... 7-4
Emergency Towing/Dragging 7-4
Operation from Ground 7-5
Operation from Platform 7-6
Driving on a Slope..... 7-7
Charging the Battery 7-8

8 Transporting and Lifting the Machine..... 8-1

Lifting the Machine with a Crane 8-2
Transporting the Machine 8-3

9 Maintenance 9-1

Conducting a Pre-delivery Inspection . 9-2
Following a Maintenance Schedule ... 9-2
Completing a Repair & Inspection Report..... 9-3
Major Modification and Repair Record 9-5

10 Decals/Nameplates Inspection 10-1

Decals/Nameplate (GB) 10-2
Decals/Nameplate (CE-Metric) 10-5

 © Nov. 2022

Decals/Nameplate (CE-Imperial) . . 10-8
Decals/Nameplate (CSA) 10-11
Decals/Nameplate (ANSI) 10-14
Decals/Nameplate-GB (lithium battery) 10-17

Appendix 1: Symbols and Description A-1

Appendix 2: Prepare the Work Record Before Delivery A-3

Appendix 3: Repair & Inspection Report A-5

Appendix 4: Major Modification and Repair Record A-9

INTRODUCTION

Thank you for choosing and using the machinery of Hunan Sinoboom Intelligent Equipment Co., Ltd. Always read, understand and become familiar with the operation requirements of the machine and its associated safety procedures before operating, maintaining and repairing the machine. Operating the machine without becoming familiar with its specific operation requirements and safety procedures poses serious risks. Operators who follow safety rules and operate the machine carefully and effectively will prevent personal injury, property loss and accidents.

Use this machine only to transport tools to work locations and for performing tasks on the work platform. Operators must be competent and must obtain training to carefully use the machine and follow safety procedures. Only trained and authorized personnel may operate the machine.

This manual guides the operator in operating and using the machine. The operator is responsible for reading, understanding and implementing the operation and safety procedures in this manual and for following the manufacturer's instructions before beginning any work. Read, understand and follow all safety rules and operating instructions. The operator must also consider the machine's uses and limitations and the conditions at the jobsite before using this machine. Strictly following all safety requirements in this manual is critical.

Consider this manual a part of the machine, along with *Maintenance Manual* and *Parts Manual*, and always keep the manuals with the machine. The owner or administrator of the machine shall offer all manuals and other necessary information provided by the machine manufacturer regarding the daily inspection and maintenance to each of the renters. If the machine is sold, the owner or administrator must pass along the manuals and other necessary information to the purchaser. The owner or administrator of the machine shall also provide the manufacturer's maintenance information to the person responsible for maintaining the machine.

If you have any questions, contact Hunan Sinoboom Intelligent Equipment Co., Ltd..

This Page Intentionally Left Blank

1 MACHINE SPECIFICATIONS

Table 1-1 TB20EJ Plus specifications

MEASURE	TB20EJ Plus (METRIC)	TB660EJ Plus (IMPERIAL)
DIMENSION		
Max. platform height	20 m	65ft 7in
Max. working height	22 m	72ft 2in
Max. horizontal reach (restricted/ unrestricted)	13.85 m/15.4 m	45 ft 5 in/50 ft 6 in
Max. horizontal working envelope (restricted/unrestricted)	14.45 m/16 m	47ft 5in/52ft 6in
Overall length (stowed)	9.99 m	32ft 9in
Overall length (transport)	8.12 m	26ft 8in
Overall width (stowed)	2.49 m	8ft 2in
Overall width (transport)	2.49 m	8ft 2in
Overall height (stowed)	2.79 m	9ft 2in
Overall height (transport)	2.77 m	9ft 1in
Wheelbase	2.49 m	8ft 2in
Ground clearance	0.39 m	1ft 3in
Tire size (spec / type)	Options 36×14-20 (solid) 355/55D625 (foam-filled)	
Platform dimension (L×W×H)	Options 1.45×0.85×1.1 m 1.83×0.85×1.1 m 2.44×0.91×1.1 m	Options 4ft 9in×2ft 9in×3ft 7in 6ft×2ft 9in×3ft 7in 8ft×2ft 11in×3ft 7in
PERFORMANCE		
Rated platform load capacity (restricted/unrestricted)	454 kg/300 kg	1000 lb / 661 lb
Max. number of occupants (restricted/unrestricted)	3/2	
Turntable rotation/continuity	360 °/continuous	
Platform rotation	160°	
Max. drive speed (stowed)	4.8km/h	3 mph
Max. drive speed (raised)	1.1 km/h	0.68 mph
Drive mode (drive×steer)	4WD×2WS	
Gradeability	35%/19°	

Table 1-1 TB20EJ Plus specifications (continued)

MEASURE	TB20EJ Plus (METRIC)	TB660EJ Plus (IMPERIAL)
Turntable tailswing	1.45 m	4ft 9in
Max. allowable inclination	5°	
Turning radius (inside)	2.4 m	7ft 10in
Turning radius (outside)	5.55 m	18ft 3in
Max. allowable side force	400 N	90 lbf
Max. operating noise level	80 dB	
IP rating	IP65	
POWER		
Hybrid motor (voltage/power)	29 V DC, 15 kW	
Open-circuit variable pump displacement	35cc/r	
Hydraulic tank capacity	180 L	39.6gal (UK)/47.6gal (US)
Oil capacity of hydraulic tank	150 L	33.0 gal (UK)/39.6 gal (US)
Hydraulic system pressure	22Mpa	3191psi
Battery (voltage, capacity)	48V, 480Ah (lead-acid battery) 48V, 528Ah (lithium battery)	
Power system voltage	48 VDC	
Control system voltage	12 VDC	
Charger (input voltage/output current)	100 ~ 240 V AC, 60 A	
GROUND BEARING DATA		
Max. tire load	6740 kg	14859 lb
Pressure against ground	675 kPa	97.9 psi
ENVIRONMENT		
Max. allowable wind speed	12.5 m/s	28 mph
Max. allowable altitude	1000 m	3280 ft
Allowable ambient temperature (lead-acid battery)	-10℃ ~ 40℃	14℉ ~ 104℉
Allowable ambient temperature (- lithium battery)	-20℃ ~ 40℃	-4℉ ~ 104℉
Max. allowable RH	90%	
Storage environment	Stored at -20℃ to 50℃ (-4℉ to 122℉) in a well-ventilated environment with 90% relative humidity (20℃ [68℉]), and away from rain, sun, corrosive gas, inflammables and explosives.	
WEIGHT		
Gross weight (unladen)	11950 kg	26345 lb

Table 1-2 TB22EJ Plus specifications

MEASURE	TB22EJ Plus (METRIC)	TB740EJ Plus (IMPERIAL)
DIMENSION		
Max. platform height	22.5 m	73ft 10in
Max. working height	24.5 m	80ft 5in
Max. horizontal reach (restricted/ unrestricted)	12.7 m/14.3 m	41ft 8in/46ft 11in
Max horizontal working envelope (restricted/unrestricted)	13.3 m/14.9 m	43ft 8in/48ft 11in
Overall length (stowed)	10.68 m	35 ft
Overall length (transport)	8.81 m	28ft 11in
Overall width (stowed)	2.49 m	8ft 2in
Overall width (transport)	2.49 m	8ft 2in
Overall height (stowed)	2.81 m	9ft 3in
Overall height (transport)	2.93 m	9ft 7in
Wheelbase	2.49 m	8ft 2in
Ground clearance	0.39 m	1ft 3in
Tire size (spec / type)	Options 36×14-20 (solid) 355/55D625 (foam-filled)	
Platform dimension (L×W×H)	Options 1.45×0.85×1.1 m 1.83×0.85×1.1 m 2.44×0.91×1.1 m	Options 4ft 9in×2ft 9in×3ft 7in 6ft×2ft 9in×3ft 7in 8ft×2ft 11in×3ft 7in
PERFORMANCE		
Rated platform load capacity (restricted/unrestricted)	454 kg/300 kg	1000 lb / 661 lb
Max. number of occupants (restricted/unrestricted)	3/2	
Turntable rotation/continuity	360 °/continuous	
Platform rotation	160°	
Max. drive speed (stowed)	4.8km/h	3 mph
Max. drive speed (raised)	1.1 km/h	0.68 mph
Drive mode (drive×steer)	4WD×2WS	
Gradeability	35%/19°	
Turntable tailswing	1.45 m	4ft 9in
Max. allowable inclination	5°	
Turning radius (inside)	2.4 m	7ft 10.5in
Turning radius (outside)	5.55 m	18ft 2.5in

Table 1-2 TB22EJ Plus specifications (continued)

MEASURE	TB22EJ Plus (METRIC)	TB740EJ Plus (IMPERIAL)
Max. allowable side force	400 N	90 lbf
Max. operating noise level	80 dB	
IP rating	IP65	
POWER		
Hybrid motor (voltage/power)	29 V DC, 15 kW	
Open-circuit variable pump displacement	35cc/r	
Hydraulic tank capacity	180 L	39.6gal (UK)/47.6gal (US)
Oil capacity of hydraulic tank	150 L	33.0 gal (UK)/39.6 gal (US)
Hydraulic system pressure	22Mpa	3191psi
Battery (voltage, capacity)	48V, 480Ah (lead-acid battery) 48V, 528Ah (lithium battery)	
Power system voltage	48 VDC	
Control system voltage	12 VDC	
Charger (input voltage/output current)	100 ~ 240 V AC, 60 A	
GROUND BEARING DATA		
Max. tire load	6820 kg	15036 lb
Pressure against ground	700 kPa	102 psi
ENVIRONMENT		
Max. allowable wind speed	12.5 m/s	28 mph
Max. allowable altitude	1000 m	3280 ft
Allowable ambient temperature (lead-acid battery)	-10℃ ~ 40℃	14℉ ~ 104℉
Allowable ambient temperature (-lithium battery)	-20℃ ~ 40℃	-4℉ ~ 104℉
Max. allowable RH	90%	
Storage environment	Stored at -20℃ to 50℃ (-4℉ to 122℉) in a well-ventilated environment with 90% relative humidity (20℃ [68℉]), and away from rain, sun, corrosive gas, inflammables and explosives.	
WEIGHT		

Table 1-2 TB22EJ Plus specifications (continued)

MEASURE	TB22EJ Plus (METRIC)	TB740EJ Plus (IMPERIAL)
Gross weight (unladen)	12260 kg	27029 lb

Note:
a) The platform height plus the operator height (taken as 2m [6ft 7in]) is the working height.
b) The ground bearing data is approximate, not factoring different options, thus only applicable in adequately safe conditions.
c) In different areas, hydraulic oil, engine oil, coolant, fuel and lubricant should be added in accordance with the environmental temperature.
d) In cold weather, auxiliary devices are needed to start the machines.
e) Rated platform capacity refers to the rated load of the platform, including the loads of persons, materials, tools, platform accessories and other objects on the platform.
f) The total vibration value of the platform does not exceed 2.5m/s², and the maximum root-mean-square value of the weighted acceleration of the entire machine does not exceed 0.5m/s².
g) It is recommended not to use lead-acid batteries in environments below 0 °C, otherwise the battery capacity will decay rapidly and the battery life will be affected.

TB20EJ Plus chart of working envelope

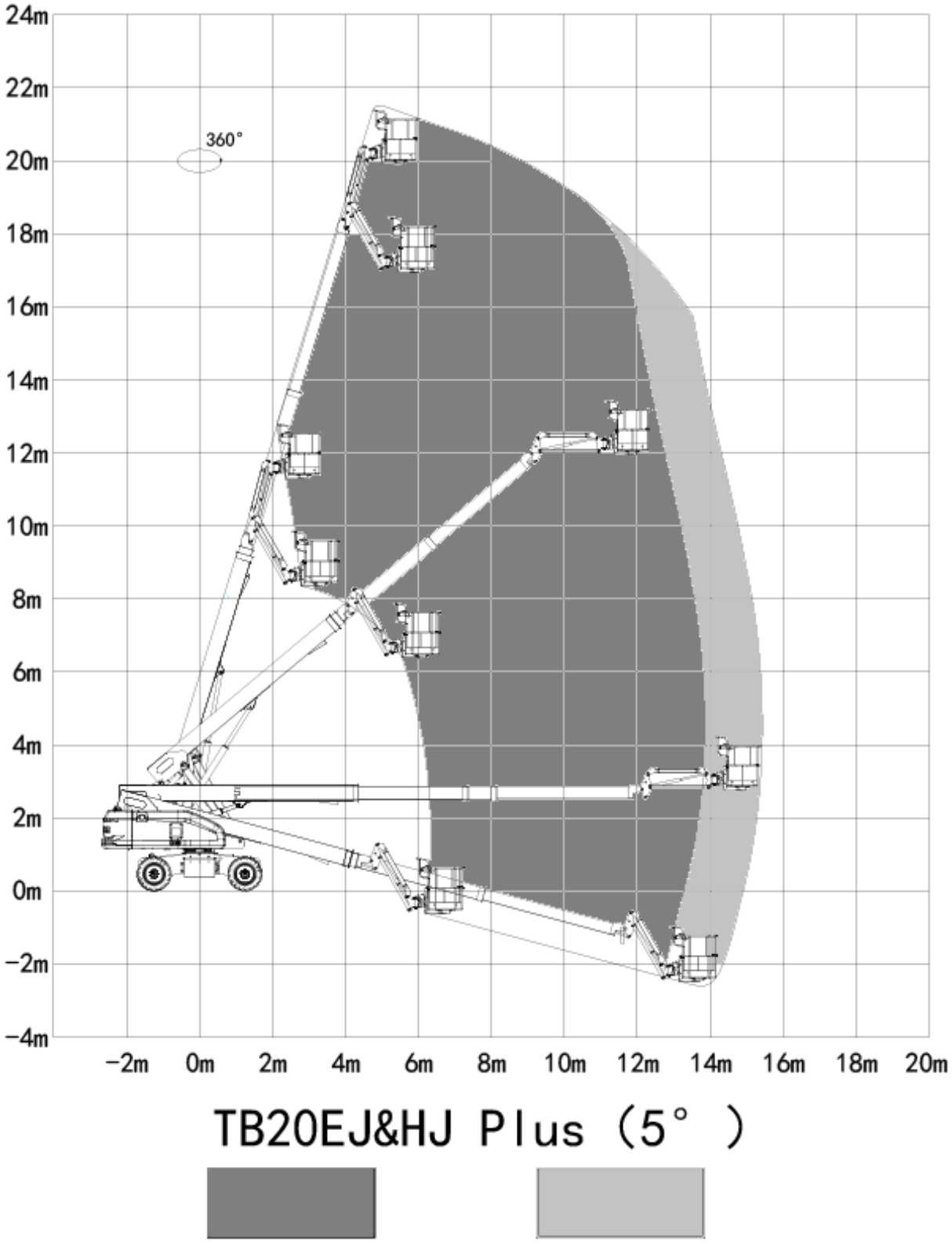

TB22EJ Plus chart of working envelope

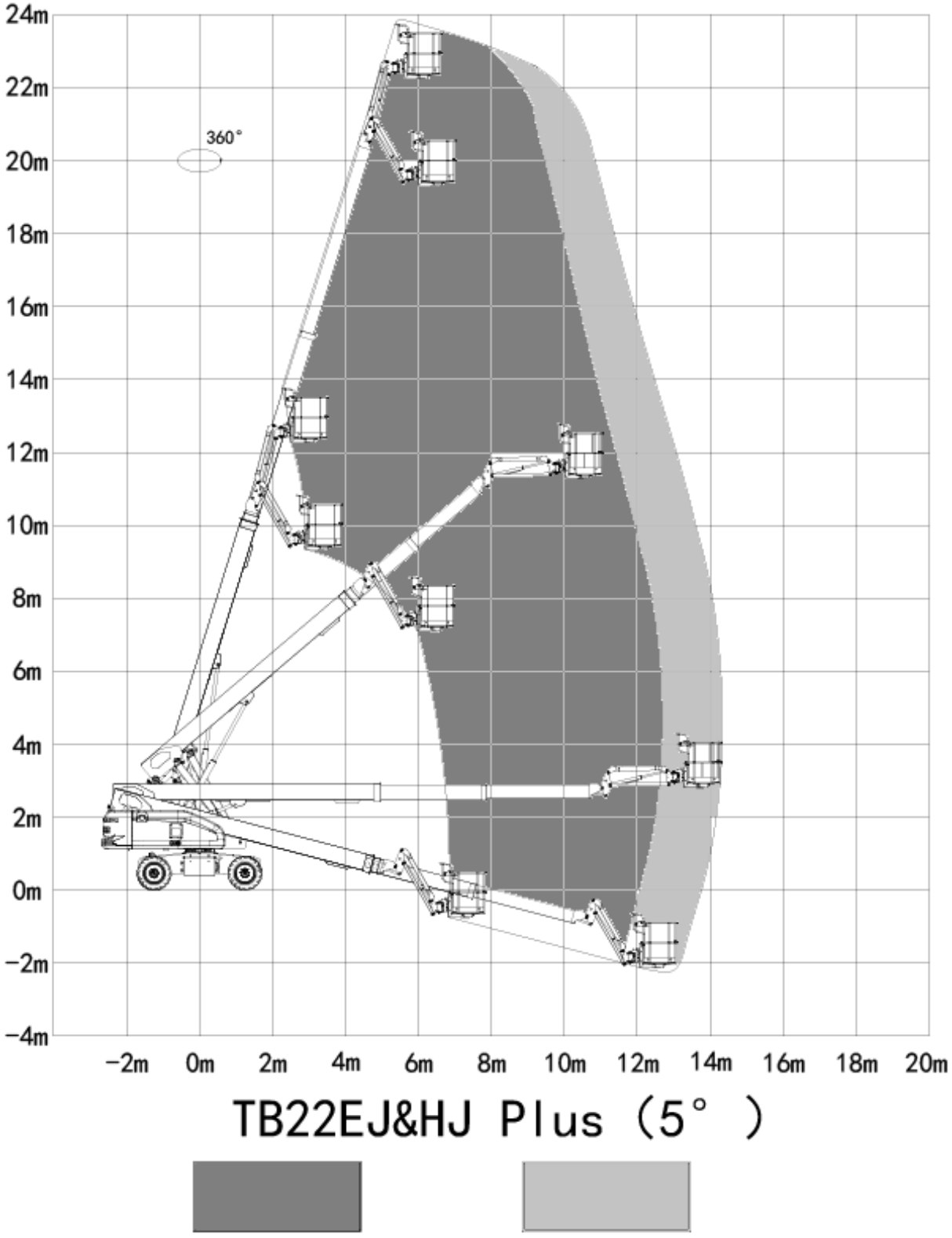

This Page Intentionally Left Blank

2 MACHINE COMPONENTS

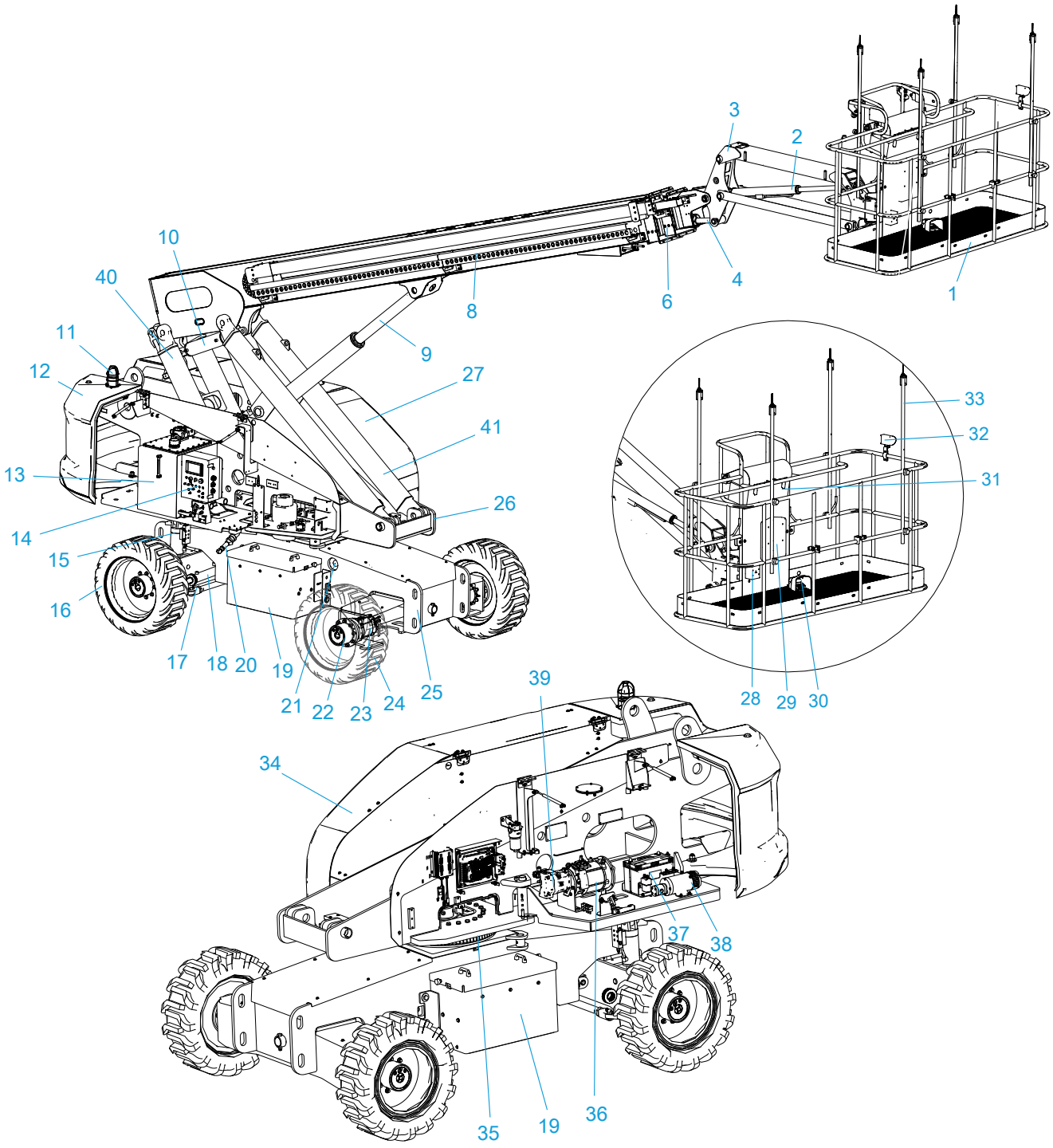

Figure 2-1

Table 2-1

1. Platform	**15.** Oscillate cylinder	**29.** Manual storage container (option)
2. Jib lift cylinder	**16.** Front wheel	**30.** Footswitch
3. Jib boom	**17.** Steer linkage	**31.** Plataform controller
4. Slave cylinder	**18.** Steer cylinder	**32.** Work light (option)
5. 2nd telescopic boom	**19.** Battery box	**33.** Limit device (option)
6. 1st telescopic boom	**20.** Power plug	**34.** Turntable cover, LH
7. Base boom	**21.** Power disconnect switch	**35.** Slewing bearing
8. Cable track	**22.** Drive reducer	**36.** Hybrid motor
9. Main lift cylinder	**23.** Drive motor	**37.** Battery
10. Master cylinder	**24.** Rear wheel	**38.** Power unit
11. Flash beacon	**25.** Chassis	**39a.** Open-circuit variable pump
12. Counterweight	**26.** Turntable	**40.** Articulated boom
13. Hydraulic tank	**27.** Turntable cover, RH	**40.** Support arm
14. Ground controller	**28.** AC power receptacle (option)	

Machine positions

Stowed position:

Boom lowers and retracts in place.

Non-operating position:

Boom rises at an angle not exceeding 15°, and extends not exceeding 1.2m (3.9ft).

Operating/raised position:

Boom rises at an angle exceeding 15°, or extends beyond 1.2m (3.9ft).

Transport position:

Boom lowers and retracts in place, outriggers retract in place, jib boom rotates leftwards in place until under the main boom, and platform rotates leftwards in place.

3 SAFETY

Read, understand and comply with the safety rules and regulations of your workplace and your government.

Before using the machine,ensure the operator is properly trained and qualified in safely operating the machine. The training includes but is not limited to：

- Warning and instruction decals on the machine
- Pre-operation inspection
- Any factors that may affect the machine stability
- Common hazards and countermeasures
- Jobsite inspection
- Functions of all controls and associated knowledge, including emergency control.
- Personal protection equipment that suits the task, workplace and environment.
- Safety operation
- Transporting the machine
- Measures against unauthorized use
- Operating instructions

Understand that as the operator you have the responsibility and right to shut down the machine in case of failure with the machine or other emergency at your workplace.

NOTICE

People suffering from heart disease, hypertension, epilepsy and other diseases and people who fear heights must never operate or use this machine. Also, people who have alcohol or drugs in their system, or experience excessive fatigue or depression, are prohibited from operating or using this machine.

SAFETY DEFINITIONS



This safety alert symbol appears with most safety statements. It means attention, become alert, your safety is involved! Please read and abide by the message that follows the safety alert symbol.

DANGER

Indicates a hazardous situation that, if not avoided, *will* result in death or serious injury.

WARNING

Indicates a hazardous situation that, if not avoided, *could* result in death or serious injury.

CAUTION

Indicates a hazardous situation that, if not avoided, *could* result in minor or moderate injury.

NOTICE

Indicates a situation that can cause damage to the engine, personal property and/or the environment, or cause the equipment to operate improperly.

NOTE: Indicates a procedure, practice or condition that should be followed in order for the engine or component to function in the manner intended.

REPORTING ACCIDENTS

In case of any accident involving the machinery of Hunan Sinoboom Intelligent Equipment Co., Ltd., notify Hunan Sinoboom Intelligent Equipment Co., Ltd. Immediately, even if no personal injury or property damage occurs during the accident. Contact Hunan Sinoboom Intelligent Equipment Co., Ltd. by telephone and provide all necessary details. Failure to notify the manufacturer within 48 hours of the incident involving the machinery of Hunan Sinoboom Intelligent Equipment Co., Ltd. may void the product's warranty.

NOTICE

Thoroughly inspect the machine and all its functions after any accident, being sure to test first from the ground controller and then from the platform controller. Ensure the machine's lifting height does not exceed 3 m(9.8 ft) until all damage has been repaired and all controllers operate properly.

ELECTROCUTION HAZARDS

NOTE: This machine is not insulated and does not have an electric shock protection function.

All operators and managers shall comply with national or local regulations regarding the minimum safe distance of live conductors above the ground. In the absence of such requirements, operators and managers should follow the minimum safety distance requirements in ***Table 3-1 Minimum Safe Distance, page 3-2***.

⚠ WARNING

ELECTRICAL SHOCK HAZARDS







- **Always maintain a safe distance from power lines and electrical equipment in accordance with applicable government regulations and see *Table 3-1 Minimum Safe Distance, page 3-2*.**
- **Consider platform and boom movement, wire swinging or drooping, beware of strong winds or gusts, and do not operate the machine when there is lightning or heavy rain.**
- **If the machine comes into contact with live wires, keep away from the machine. Personnel on the ground or on the platform must not touch or operate the machine until the power is switched off.**
- **Do not use the machine as a ground wire during welding and polishing operations.**

Table 3-1 Minimum Safe Distance

Voltage (Phase to Phase, kV)	Minimum Safe Distance (m/ft)
0-50	3.05 (10)
50-200	4.60 (15)
200-350	6.10 (20)
350 -500	7.62 (25)
500 -750	10.67 (35)
750 -1000	13.725 (45)

TIPPING HAZARDS AND RATED LOAD

Maximum rated load bearing capacity of the platform:

Table 3-2

TB20EJ Plus	
Metric	300kg (unrestricted / 2 persons & tools) 454kg (restricted / 3 persons & tools)
Imperial	661 lb (unrestricted / 2 persons & tools) 1000 lb (restricted / 3 persons & tools)
TB22EJ Plus	
Metric	300kg (unrestricted / 2 persons & tools) 454kg (restricted / 3 persons & tools)
Imperial	661 lb (unrestricted / 2 persons & tools) 1000 lb (restricted / 3 persons & tools)

⚠ WARNING

TIPPING HAZARDS



- **Personnel, equipment and materials on the platform must not exceed the maximum platform capacity.**
- **Only raise or extend the boom when the machine is on solid, level ground.**
- **Select only the low speed when driving the machine on a slope.**
- **Do not use the tilt alarm as a level indicator. The tilt alarm on the platform will sound only if the machine is heavily tilted.**

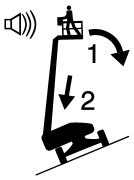

- **If the tilt alarm sounds when the machine drives up a slope, please lower the boom per the following procedure and move the machine onto firm level ground. Be sure not to rotate the boom when lowering.**

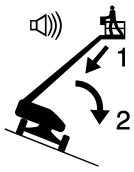

  1. **Lower the main boom;**
  2. **Retract the telescopic boom.**

- **If the tilt alarm sounds when the machine drives down a slope, please lower the boom per the following procedure and move the machine onto firm level ground. Be sure not to rotate the boom when lowering.**

  1. **Retract the telescopic boom;**
  2. **Lower the main boom.**

- **Do not drive faster than 1.1 km/h (0.68 mph) when the platform is raised.**
- **When the platform is raised, the machine cannot be driven on uneven terrain, unstable surfaces or in other dangerous conditions.**
- **Do not operate the machine during strong winds or gusts, and do not increase the surface area of the platform or load. Increasing the area exposed to the wind will reduce the stability of the machine.**
- **When the machine is on rough ground with gravel, or other uneven surfaces, or near holes and steep slopes, maintain a minimum distance of 0.6m (2ft) and reduce the speed.**

⚠ WARNING

TIPPING HAZARDS

- **When on the platform, do not push and pull objects outside of it. The maximum side force allowed is 400N (90 lbf).**
- **Tow the machine only from the tie-down/lifting points on the chassis.**
- **Never use the boom or platform to stabilize or support any objects outside of the machine.**
- **Do not change any machine parts that may affect safety and stability.**
- **Do not replace key parts that affect machine stability with parts of different weights or specifications.**
- **Do not modify or change moving aerial platforms without the manufacturer's prior written permission.**
- **On the platform, do not attach an additional device for placing tools or other materials to the guardrail. This will increase the platform weight, surface area and load.**
- **Do not place or fasten any overhanging load on or to any part of the machine.**
- **Do not place ladders or scaffolding on the platform or any parts of the machine.**
- **Do not use the machine on a moving or active surface or on a vehicle. Ensure all tires are in good condition, the slotted nuts tightened and the cotter pins complete.**
- **Do not use a battery that weighs less than the original lead–acid battery (375kg [827 lb]) or the original lithium battery (155kg [342 lb]), and do not remove or modify the counterweight or other parts inside the battery box. The battery not only provides power, but also serves as a counterweight. The battery is vital to maintaining the stability of the machine.**
- **Do not use the platform or boom assembly to push other machines or objects.**

⚠ WARNING

TIPPING HAZARDS

- **Do not let the platform or boom assembly touch nearby structures.**
- **Do not tie off the platform with ropes or other binding materials to the nearby structures.**
- **Do not put any load outside the platform.**
- **When the platform is caught or stuck or when other objects in the vicinity impede its normal movement, do not use the platform controller to lower the platform. If you intend to lower the platform with the ground controller, you must operate it only after all personnel have left the platform.**

JOBSITE HAZARDS

⚠ WARNING

JOBSITE HAZARDS







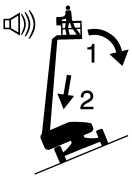

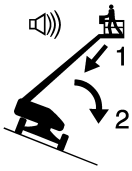





- **Do not operate the machine on surfaces, edges or potholes that cannot bear the weight of the machine. Raise or extend the boom only when the machine is on firm, flat ground.**
- **Never travel on uneven terrain or unstable surfaces or in other dangerous conditions when raising the platform.**
- **When the machine is on rough ground, with gravel or other uneven surfaces, or near holes and steep slopes, maintain a minimum distance of 0.6m (2ft) and reduce the speed.**
- **Do not use the tilt alarm as a horizontal indicator. The tilt alarm on the platform will sound only when the machine is heavily tilted.**
- **If the tilt alarm sounds when the machine drives up a slope, lower the boom per the following procedure and move the machine onto firm level ground. Be sure not to rotate the boom while lowering.**
  1. **Lower the main boom;**
  2. **Retract the telescopic boom.**
- **If the tilt alarm sounds when the machine drives down a slope, lower the boom per the following procedure and move the machine onto firm level ground. Be sure not to rotate the boom while lowering.**
  1. **Retract the telescopic boom;**
  2. **Lower the main boom.**
- **Running speed should not exceed 1.1km/h (0.68 mph) when the platform rises.**
- **If the machine can be used outdoors, never operate it during strong winds or gusts. Do not lift the platform when the wind speed exceeds 12.5 m/s (28 mph). If the wind speed increases to beyond 12.5 m/s (28 mph) after the platform is lifted, fold the platform**

⚠ WARNING

JOBSITE HAZARDS

and do not continue to operate the machine.

- **Do not use any device that may increase the wind load on the machine.**
- **Do not drive or lift the machine on slopes, steps or vaulted surfaces that exceed the maximum gradeability of the machine.**

Before or during machine operation, check the jobsite for possible hazards and pay attention to the environmental restrictions, including flammable and explosive gas/dust. If the machine is to be used in any other applications, or by any other means, other than those specified by **Sinoboom**, it must be approved or guided by the manufacturer.

Table 3-3

BEAUFORT NUMBER	METERS/ SECOND	MILE/ HOUR	DESCRIPTI-ON	GROUND CONDITION
0	0 ~ 0.2	0 ~ 0.5	Calm	Calm. Smoke rises vertically.
1	0.3 ~ 1.5	1 ~ 3	Light air	Wind motion visible in smoke.
2	1.6 ~ 3.3	4 ~ 7	Light breeze	Wind felt on exposed skin. Leaves rustle.
3	3.4 ~ 5.4	8 ~ 12	Gentle breeze	Leaves and smaller twigs in constant motion.
4	5.5 ~ 7.9	13 ~ 18	Moderate breeze	Dust and loose paper rise. Small branches begin to move.
5	8.0 ~ 10.7	19 ~ 24	Fresh breeze	Smaller trees sway.
6	10.8 ~ 13.8	25 ~ 31	Strong breeze	Large branches in motion. Flags waving near horizontal. Umbrella use becomes difficult.
7	13.9 ~ 17.1	32 ~ 38	Near gale/ moderate gale	Whole trees in motion. Effort needed to walk against the wind.
8	17.2 ~ 20.7	39 ~ 46	Fresh gale	Twigs broken from trees. Cars veer on road.
9	20.8 ~ 24.4	47 ~ 54	Strong gale	Light structure damage.

NOTICE

Maximum gradeability is applicable for machines with platform retracted.

Gradeability means the maximum allowable tilt angle of the machine when it is on solid ground and the platform is only capable of carrying one person. As the weight of the machine's platform increases, the machine's climbing capacity reduces.

Maximum gradeability：

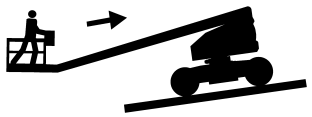

Uphill: 35%/19°

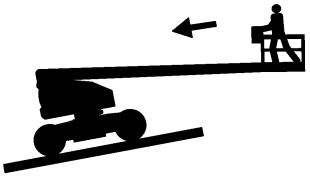

Downhill: 30%/17°

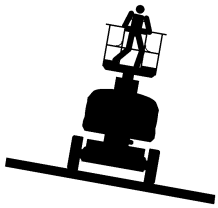

Side slope: 25%/14°

UNSAFE OPERATION HAZARDS

At a minimum, operators must operate and maintain the machine as stated in the Operation Manual and the *Maintenance Manual* in addition to following more stringent industry regulations and workplace rules. Never engage in unsafe machine operation.

Do not operate the machine in the following situations:

- Unrelated personnel/equipment is present in the working envelope of the machine.
- Use as a crane (except the custom-made ones with such function).
- Use on the truck, trailer, tracked vehicle, ship, scaffold and the like without written consent by the manufacturer or a qualified professional.
- Improper securing of the machine to another object by just leaning, fastening or binding.
- Stunt or imprudent use of the machine.
- Overloaded or over-moment situation.
- Other prohibited situations as specified in the Operation Manual and Maintenance Manual.

⚠ WARNING

UNSAFE OPERATION HAZARDS



- **Do not push any object outside the platform. The maximum side force allowed is 400N (90 lbf).**



- **Tow the machine only from the tie-down/lifting points on the chassis.**
- **Never use the boom or platform to stabilize or support any objects outside of the machine.**
- **Do not modify any component that may affect the machine safety and stability.**
- **Do not replace key parts that affect machine stability with ones of different weights or specifications.**



- **Do not change or modify the machine without the manufacturer's written permission.**
- **On the platform, do not attach any additional device for placing tools or other materials to the guardrail. This will increase the platform weight, surface area and load.**



- **Do not put ladders or scaffolding on the platform or any part of this machine.**
- **Do not use additional devices to increase the working height of the machine.**
- **Do not use the machine on any mobile or movable surface or vehicle. Ensure all tires are in good condition, the slotted nuts tightened and the cotter pins complete.**
- **Do not use a battery that weighs less than the original lead-acid battery (375kg [827 lb]) or the original lithium battery (155kg [342 lb]), and do not remove or modify the counterweight or other parts inside the battery box. The battery not only provides power, but also serves as a counterweight. The battery is vital to maintaining the stability of the machine.**

⚠ WARNING

UNSAFE OPERATION HAZARDS

- **Do not place or attach any suspended load onto any part of the machine.**
- **Do not use the machine as a crane.**
- **Do not use the platform to push the machine or other objects.**
- **Do not allow the platform or boom to touch nearby structures.**
- **Do not use ropes or other binding materials to tie the platform or boom onto nearby structures.**
- **Do not put the load outside the platform.**
- **When the platform is caught or stuck or when other objects in the vicinity impede its normal movement, do not use the platform controller to lower the platform. If you intend to lower the platform with the ground controller, you must operate it only after all personnel have left the platform.**
- **Special care must be taken while driving the machine with the platform elevated.**
- **When one or more of the machine's tires are off the ground, evacuate all personnel before attempting to stabilize the equipment. Use a crane, forklift or other suitable equipment to stabilize the machine.**

FALL HAZARDS

At a minimum, operators must operate and maintain the machine as stated in the operation manual and in the maintenance manual in addition to following more stringent industry regulations and workplace rules.

⚠ WARNING

FALL HAZARDS



- **Each person on the platform must wear harnesses or use safety equipment consistent with government regulations. Fasten the cable to the fixed point of the platform. Never fasten the cable of more than one person to a fixed point on the platform.**
- **Do not sit, stand or crawl on the guardrails. When on the platform always remain standing on the platform floor.**
- **Do not enter or exit the platform through the boom.**
- **Keep the platform floor free of obstacles.**
- **Do not allow mud, oil stains, grease or other slippery substances reside on the footwear or platform floor.**
- **Do not enter or exit the platform unless the machine is fully in stowed position.**
- **Close the platform entrance door before operating the machine.**
- **Do not operate the machine if the handrails are not properly installed and the platform entry door is not closed.**

COLLISION HAZARDS

At a minimum, operators must operate and maintain the machine as stated in *Operation Manual* and in the *Maintenance Manual* in addition to following more stringent industry regulations and workplace rules.

⚠ WARNING

COLLISION HAZARDS



- **Pay attention to the field of sight and the presence of blind spots when moving or operating the machine.**
- **Persons except the operator must maintain a distance of at least 1.8m (5.9ft) from the machine while it is travelling or swinging.**



- **When the work platform of a moving machine is approx. 2m (6.6ft) away from the obstructions, elevate or lower the work platform, rather than directly driving towards the obstructions.**
- **Switch to the low speed gear before parking the machine that drives at high speed.**



- **Do not engage the high speed gear when the machine is driving reverse or in restricted or enclosed work area.**
- **Check the work area to avoid ground and overhead obstructions or other possible risks.**
- **Be sure to exercise caution when using the platform controller and ground controller. Color-marked directional arrows indicate the functions of travel, lift/lower and steering.**
- **Users must comply with user, workplace and government rules regarding the use of personal protective equipment (hard hats, safety belts and gloves, etc.).**
- **Place the machine on level ground or in a secured position before releasing the brake.**
- **Ensure no people or obstructions are beneath the platform before lowering it.**
- **When the machine is conducting aerial work, warn the operator/ other people not to work, stand or walk under the raised boom or platform. Set up roadblocks if necessary.**
- **Limit the speed of travel according to ground conditions, crowding, gradients, the presence and location of personnel and any**

⚠ WARNING

COLLISION HAZARDS

other factors that may cause collisions.

- **Do not operate the machine on the route of any crane or overhead traveling device unless the crane control is locked or precautions have been taken to prevent any potential collision.**
- **Keep the machine away from any stationary objects (buildings etc.) or mobile objects (vehicles, cranes etc.).**
- **Never operate a machine in a dangerous way or for fun.**

CRUSH HAZARDS

A potential crush hazard exists during movement of the machine. Always keep body parts and clothing a safe distance from the machine during machine operation.

⚠ WARNING

CRUSH HAZARDS



- **Do not place your hands and arms where they may become crushed or trapped.**
- **Do not work under the platform or the boom when the boom is not protected by a crane.**
- **Maintain good judgment and planning when using the controller on the ground to operate the machine. Maintain proper distance between operator, machine and fixed object.**

EXPLOSION AND FIRE HAZARDS

⚠ WARNING

EXPLOSION AND FIRE HAZARDS





- **Do not use the machine or charge the battery in hazardous or potentially flammable or explosive atmosphere.**
- **For the engine-powered machines, never add fuel while the engine is still running, and only add fuel when the place is well ventilated and free of flame, spark or any other hazards that may cause explosion.**
- **Never spray ether on the engine equipped with glow plug.**

DAMAGED MACHINE HAZARDS

NOTICE

To avoid machine damage, follow all operation and maintenance requirements in the Operation Manual and the Maintenance Manual.

⚠ WARNING

DAMAGED MACHINE HAZARDS



- **Do not use the machine if it is damaged or not in proper operating condition.**
- **Thoroughly inspect and test for all functions of the machine before use. Immediately stop and mark damaged or faulty machines and then contact the manufacturer.**
- **Ensure that all maintenance operations have been performed in accordance with the *Operation Manual* and the *Maintenance Manual*.**
- **Make sure all labels are in place and are legible.**
- **Ensure that the *Operation Manual* and *Maintenance Manual* are sound, easy to read and stored in the storage compartment on the platform.**

BODILY INJURY HAZARDS

Always follow all operation and maintenance requirements in this manual and the Maintenance Manual.

⚠ WARNING

BODILY INJURY HAZARDS



- **Do not operate the machine when there are oil spills/leaks. Oil spills or leaks in hydraulic fluids may penetrate and burn the skin.**
- **Always operate the machine in well ventilated atmosphere to prevent carbon monoxide poisoning.**

NOTE: The operator must carry out maintenance during the pre-operation inspection only. During operation, keep the left and right doors of the chassis closed and locked. Only trained service personnel can open the left and right doors to repair the machine.

BATTERY HAZARDS

⚠ WARNING

FIRE AND EXPLOSION HAZARD





- **Batteries contain sulfuric acid and may generate explosive mixtures of hydrogen and oxygen gases. Keep any device that may produce sparks or flames (- including cigarettes/smoking materials) away from the battery to prevent explosion.**
- **Do not touch the battery terminals or cable clips with tools that may produce sparks.**
- **Do not charge the battery under direct sunlight.**
- **The battery should be charged in a well-ventilated site.**
- **Should the battery overheat, deform, leak, smell or smoke during service, stop using the battery immediately and place it in an open area far away from the crowd.**
- **Do not throw the battery to a fire or heater.**

⚠ WARNING

ELECTROCUTION HAZARD





- **Contact with hot circuit may cause serious injury or death. Be sure to wear goggles, gloves and protective clothing.**
- **Remove all rings, watches and other accessories.**

⚠ WARNING

CHEMICAL BURN HAZARD



- **Avoid battery acid spilling or contacting unprotected skin. Wash the skin with plenty of water and seek medical attention immediately if battery acid contacts skin.**
- **If the battery acid escapes, please use baking soda to neutralize the acid.**

⚠ WARNING

UNSAFE OPERATION HAZARD





- **Strictly follow the manufacturer's recommendations on how to properly use and maintain the battery.**
- **The battery charger can only be connected to 3–phase AC outlet, and ensure the charger works properly before charging.**
- **Only use the charger provided by the manufacturer.**
- **The battery is only applicable for the matching equipment, so do not use it otherwise.**
- **Only the properly trained personnel authorized by the workplace are allowed to remove the battery from the machine.**
- **Before replacing the battery, be sure to identify the appropriate number of personnel and the lifting method.**
- **The wrapping of the battery is prone to becoming damaged by pointed objects, so do not use a pointed part to collide with the battery.**
- **Do not place other objects or tools upon the battery to avoid short circuit.**
- **Always keep the battery vertically placed. If tiltedly placed, the battery acid may escape.**
- **Never short circuit the battery positive and negative poles.**
- **Do not use the battery positive and negative conversely.**
- **Do not connect the battery directly to a power outlet.**
- **Do not tap, throw or step on the battery.**
- **Do not immerse the battery under water, acid or alkaline solution with salt, and do not expose the battery to the rain.**
- **Do not tamper with battery system to avoid serious accident.**
- **Cut off the battery main switch if the battery is not to be used for an extended period.**

⚠ WARNING

UNSAFE OPERATION HAZARD

- **The waste battery may pose danger, so do not discard at will. If it needs to be scrapped, contact a battery recycling company.**
- **Except for the professionals, do not perform a systematic maintenance or service to the battery, otherwise it may cause bodily injuries or damage to the battery system.**
- **Except for the professionals, do not tamper with the settings or service a signal light when the system is running, otherwise it may cause bodily injuries or damage to the battery system.**
- **Except for the professionals, do not remove the battery housing, otherwise it may cause damage to the battery system.**

NOTICE

It will not covered by the warranty if the battery attenuates or fails due to customer's overuse (- continued use after battery level less than 10%) or failure to charge the battery for a long time (not timely charged for 3 days or longer when the battery level less than 10%).

HYDRAULIC HAZARDS

⚠ WARNING

BURN AND SPRAY HAZARDS





- **When the hydraulic system is hot, do not touch to avoid severe skin burn.**
- **After the machine shutdown, thoroughly clean the spilled hydraulic oil. Do not throw the oil on the ground. Once the maintenance and repair is complete, immediately clean any oil on the skin, Dispose of the used oil as per the governing laws and regulations.**
- **Do not use your hand to block the hydraulic leaks. If the leakage occurs, please first release the system pressure and maintain only after the hydraulic oil cools down. If any injury is caused by the spray of hydraulic oil, go to the doctor immediately, otherwise severe complication may develop.**

WELDING AND POLISHING REQUIREMENTS

Before welding, grinding and polishing operations, always ensure you read and understand all operation and maintenance requirements in the *Operation Manual* and the *Maintenance Manual*.

⚠ WARNING

WELDING HAZARDS



- **Comply with the welder manufacturer's recommendations for procedures concerning proper use of the welder.**
- **Welding leads or cables may only be connected after turning off the power unit.**
- **Carry out welding operations only after the welding cable has been correctly connected.**
- **Do not use the machine as a ground wire during welding operation.**
- **At all times, make sure that the power tools are completely stored in the working platform. Do not hang the power tools on the railing of the working platform or the work area outside the working platform, or hang the power tools directly by the wire.**

Before performing welding, grinding and polishing work, welders must seek permission of the responsible department at the workplace.

AFTER USING THE MACHINE

1. Choose a safe parking location that is on sturdy, level ground and that is free of obstructions. Avoid areas with heavy traffic.
2. Lower the boom to stowed position.
3. Take off all loads from the platform.
4. Push in the emergency stop button at the platform controls to the OFF position.
5. Close the cover of platform controls to protect the control panel,handle and controller from hostile weather conditions.
6. Push in the emergency stop button at ground controls to the OFF position.
7. Turn the key switch at the ground controls to OFF position and remove the key to avoid unauthorized operation of the machine.
8. Turn off the main power switch.

NOTICE

After using the machine, the power off switch must be disconnected.

This Page Intentionally Left Blank

4 JOBSITE INSPECTION

⚠ WARNING

UNSAFE OPERATION HAZARD



Be sure to follow the instructions and safety rules in this manual. Failure to follow the instructions and safety rules in this manual may result in death or serious injury.

Do not operate this machine unless you have learned and practiced the rules for safely operating the machine as stated in this manual.

- **Know and understand the safety rules before continuing the next step.**
- **Avoid dangerous situations.**
- **Always check the machine before operating.**
- **Select appropriate machinery and personal protective equipment (hard hats, safety belt and gloves, etc.) for the task.**
- **Always perform a pre-operation function test before using the machine.**
- **Check the work site.**
- **Check the safety decals/ nameplate on the machine.**
- **Only use the machine according to the instructions in this manual and for its intended purpose.**

During the jobsite inspection the operator determines whether the jobsite is suitable for safe machine operation. The operator should conduct the jobsite inspection before moving the machine to the jobsite.

Safety is the operator's responsibility. Part of safety is conducting a thorough jobsite inspection. Operators must identify and avoid workplace hazards when moving, installing and operating the machine.

Unless approved by Sinoboom, never operate the machine in a hazardous site. The following items present danger on the jobsite:

- Steep hills or caves
- Ground prominences, obstacles or debris
- Ground inclines
- Unstable or ultra-smooth surfaces
- Overhead obstacles and high-voltage wires
- Hazardous locations
- Ground surface that could fail to support the capacity of the machine and its load
- Gusts and strong winds
- Actions by unauthorized personnel
- Other possible unsafe conditions

This Page Intentionally Left Blank

5 PRE-OPERATION INSPECTION

⚠ WARNING

UNSAFE OPERATION HAZARD



Be sure to follow the instructions and safety rules in this manual. Failure to follow the instructions and safety rules in this manual may result in death or serious injury.

Do not operate this machine unless you have learned and practiced the rules for safely operating the machine as stated in this manual.

- **Know and understand the safety rules before continuing the next step.**
- **Avoid dangerous situations.**
- **Always check the machine before operating.**
- **Select appropriate machinery and personal protective equipment (- hard hats, safety belt and gloves, etc.) for the task.**
- **Always perform a pre-operation function test before using the machine.**
- **Check the work site.**
- **Check the safety decals/ nameplates on the machine.**
- **Only use the machine according to the instructions in this manual and for its intended purpose.**

Before operating the machine, please first understand the tasks to be done and be aware of the following：

1. Be familiar with each function of the machine and capable of operating it adeptly.
2. Only the person authorized by the management is allowed to operate the machine.
3. Obey the safety rules in this manual, and fully understand and follow the operating instructions in this manual to operate the machine.
4. The operator should go through a professional training based on this operation manual, and should be certified as a qualified operator in operation of this machine.
5. Clearly understand all nameplates, warning and safety decals on the machine.
6. Before each operation, examine and check the operational environment, and ensure the safety protection equipment is properly in place. The safety equipment may differ according to the operational environment.
7. Before operating the machine, be sure that all control handles are returned to neutral, and all switches in the OFF position.

TIPS FOR CONDUCTING A PRE-OPERATION INSPECTION

⚠ WARNING

TIPPING HAZARD



Do not change or modify the aerial work platform without the prior written permission of the manufacturer. If an additional device is installed on the platform or guardrail for placing tools or other materials, this will increase the platform weight and surface area or increase the load.

- The operator is responsible for performing the “pre-operation inspection” and routine maintenance as stated in this manual.
- Before each shift change, the operator must conduct a pre-operation inspection to find out whether the machine has obvious problems before the operator performs a pre-operation function test.
- The pre-operation inspection also helps the operator determine whether the machine requires routine maintenance.The operator can only perform the routine maintenance items as stated in this manual.
- Please refer to ***Inspecting Parts, page 5-2*** and check each item.
- Never use a machine that has damaged or modified parts. Mark the machine and stop using the machine if you discover damage or modifications.

- Only qualified maintenance technicians can repair the machine according to the manufacturer's regulations. After any maintenance, the operator must perform another pre-operation inspection before conducting a pre-operation function test.
- Qualified maintenance technicians must perform regular maintenance inspections according to the requirements in the manufacturer's *Maintenance Manual*.

CONDUCTING A PRE-OPERATION INSPECTION

Before starting the machine, check whether it meets the following requirements:

- Ensure the *Operation Manual* and *Maintenance Manual* are in good condition, legible and stored in the storage compartment on the platform.
- Make sure all labels are legible and appropriately located.
- Check for hydraulic oil leaks and proper oil level. Add oil as needed. See ***Inspect Hydraulic Oil Level, page 5-2***.
- Check battery for leaks and proper liquid level. Add distilled water as needed. See ***Inspecting the Battery, page 5-3***.
- Check whether the protective device in use matches the type of work performed and conforms to relevant technical standards.

INSPECTING PARTS

Before each use or work shift, check the machine for any damaged, improperly installed, loose or lost parts and unauthorized changes:

- Electrical components, wiring, cables and safety ropes
- Hydraulic hoses & fittings, hydraulic cylinder and manifolds
- Hydraulic tank
- Battery pack and its connection
- Drive motor & reducer, slewing motor & reducer
- Boom wear pads and telescopic axle wear pads
- Limit switch and horn
- Tires and rims
- Alarms and lighting (if equipped)
- Platform (including rails, floor plate, safety lock, brackets and entry door)
- Personal protection equipment
- Emergency control equipment
- Operation instructions, warning and control decals
- Structure and welding cracks
- Nuts, bolts and other fasteners

NOTICE

If any damaged part, incorrect installation or missing part is discovered, please replace it immediately and install it correctly; if any fastener is found detached or loose, please secure it immediately.

INSPECTING ENTIRE MACHINE

Inspect the entire machine for:

- Cracks in a weld joint or structural part
- Dents or other damage
- Severe rust, corrosion or oxidation
- Improper twisting of steel wire ropes, electric cables, hoses inside the platform
- Missing or loose structural parts and key components, including fasteners and pins for correct positioning and tightness
- After the inspection, ensure all covers are in place and securely locked

INSPECT HYDRAULIC OIL LEVEL

Ensuring appropriate hydraulic oil level is vital to proper operation of the machine. If too high, the oil will spill out from the oil tank during machine operation, if too low, the oil pump will suction air and damage hydraulic components. Performing daily inspection of the hydraulic oil level will help you determine if a problem exists in the hydraulic system.

Perform the following procedures with the boom in stowed position:

1. Open the left turntable cover to make visual inspection of the sides of hydraulic tank, the hydraulic oil level should be within the marking range of oil level indicator.

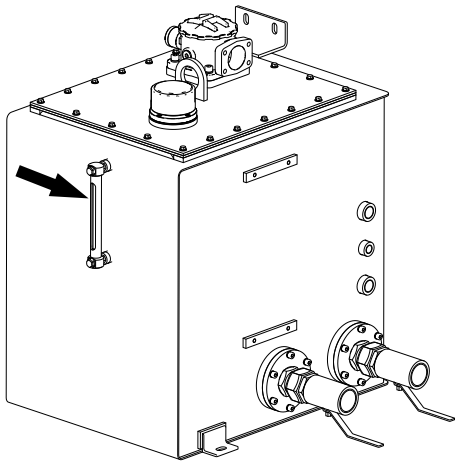

Figure 5-1

2. Ensure the hydraulic tank body and its connections are free of leaks.
3. Add oil as needed. Never overfill the tank.

Table 5-1

CUSTOMER REQUIREMENTS	HYDRAULIC OIL MARK
Normal-temperature region 0°C to 40°C (32°F to 104°F)	L-HM46
Cold region -25°C to 25°C (-13°F to 77° F)	L-HV32
High-temperature region greater than 40°C (104°F)	L-HM68
Extremely cold region less than -30°C (-22°F)	Special programmes need to be identified.

NOTICE

Different hydraulic oils can be added according to customer requirements upon factory delivery, but cannot be mixed.

INSPECTING THE BATTERY

Battery condition is critical to machine performance and safe operation. A battery with improper electrolyte level or damaged cables and wiring may harm battery parts and may pose dangerous conditions.

⚠ WARNING

ELECTROCUTION HAZARD



- **Contact with live circuit may cause serious injury or death. Be sure to wear goggles, gloves and protective clothing.**



- **Remove all rings, watches and other jewelry.**

⚠ WARNING

CHEMICAL BURN HAZARD



Avoid battery acid spills or contact with unprotected skin. If battery acid comes into contact with skin, wash the skin immediately with plenty of water and seek medical attention immediately.

If battery acid spills, use water mixed with bicarbonate (baking soda) to neutralize the acid.

- Inspect the battery level to make sure the consumed battery power is no more than 80% of the total capacity. Charge the battery after each use.
- Ensure the battery cells are wired reliably with the locking nuts torqued to the specifications as below:

Nut type	Torque
M8	9 ~ 11Nm (6.6 ~ 8.1ft-lb)
M10	18 ~ 23Nm (13.2 ~ 17ft-lb)

NOTICE

Improper connection may cause reduced performance, damaged terminals, fusions and even fires.

- Ensure the battery negative and positive are correctly connected.
- Ensure the battery connections are not corroded.
- Check the battery electrolyte level is proper (for lead-acid battery requiring maintenance)
- Check the battery box for accumulation of water, and if any, clear the water.

- Check the paint of battery for damage, if any, repair immediately to prevent corrosion and keep the box insulated.

Note: Adding terminal protectors or applying anti-corrosion agent will help the terminals and cables from corrosion.

CHECK BATTERY LEVEL

1. Turn the ground/platform select switch at the ground controller to the ground control position, pull out the emergency stop button on the ground controller to the ON position, and then turn the key switch at the ground controller to the ON position, then the display panel of the ground controller will display the battery level in percentage.

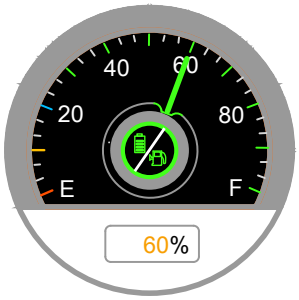

Figure 5-2

2. Or turn the ground/platform select switch at the ground controller to the platform control position, pull out the emergency stop button at the ground controller and platform controller to the ON position, and then turn the key switch at the ground controller to the ON position, then the display panel of the platform controller will display the battery capacity with progress bar.

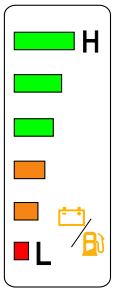

Figure 5-3

NOTICE
When the battery level is about 20%, the battery must be charged. It is forbidden to charge the battery after the it runs out.

6 PRE-OPERATION FUNCTION TEST

⚠ WARNING

UNSAFE OPERATION HAZARD



Be sure to follow the instructions and safety rules in this manual. Failure to follow the instructions and safety rules in this manual may result in death or serious injury.

Do not operate this machine unless you have learned and practiced the rules for safely operating the machine as stated in this manual.

- **Know and understand the safety rules before continuing the next step.**
- **Avoid dangerous situations.**
- **Always check the machine before operating.**
- **Select appropriate machinery and personal protective equipment (- hard hats, safety belt and gloves, etc.) for the task.**
- **Always perform a pre-operation function test before using the machine.**
- **Check the work site.**
- **Check the safety decals/ nameplate on the machine.**
- **Only use the machine according to the instructions in this manual and for its intended purpose.**

Conducting a pre-operation function test helps you discover potential problems before you start using the machine. The operator must test all machine functions according to the instructions in this manual.

Do not use a machine with problems or malfunctions. Mark the machine and do not use it if you discover any problems. Only qualified maintenance technicians can repair the machine according to the manufacturer's regulations.

After any maintenance, the operator must perform another pre-operation inspection before conducting a pre-operation function test.

PREPARING FOR A PRE-OPERATION FUNCTION TEST

NOTICE

All the pre-operation function tests must be completed within the same period..

NOTICE

In cold weather, auxiliary devices are needed to start the machines.

Before beginning a pre-operation function test:

1. Select a test area that has a solid, flat, level surface.
2. Ensure the test area is free of obstacles.

TESTING THE GROUND CONTROLLER

NOTICE

All the function tests of the ground controller must be completed within one cycle.

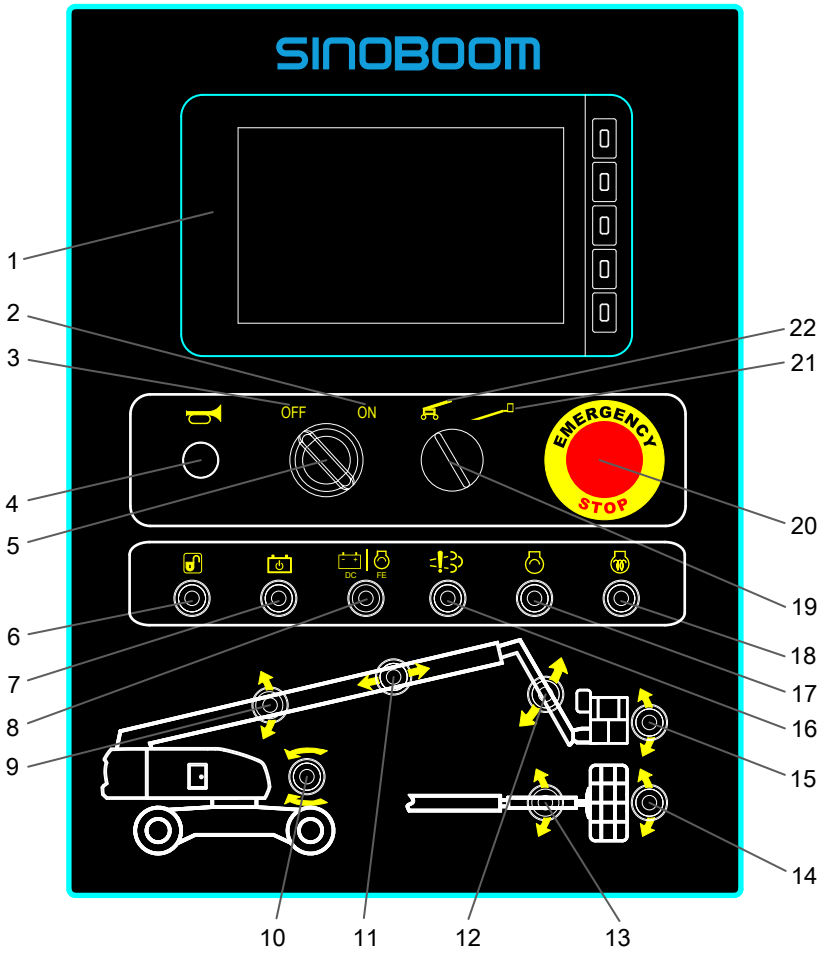

Figure 6-1

Table 6-1

1. Display (as shown below)	**9.** Main boom up/down switch	**17.** Not used
2. ON position	**10.** Turntable rotate switch	**18.**Not used
3. OFF position	**11.** Main boom telescope switch	**19.** Ground/Platform select switch
4. Horn button	**12.** Jib up/down switch-TB20EJ Plus&TB22EJ Plus only	**20.** Emergency stop button
5. Key switch	**13.** Jib rotate switch-TB20EJ Plus&TB22EJ Plus only (not used)	**21.** Platform control position
6. Enable switch	**14.** Platform rotate switch	**22.** Ground control position
7. Emergency power switch (not used)	**15.** Platform level switch	
8. FE/DC mode select switch (not used)	**16.** Not used	

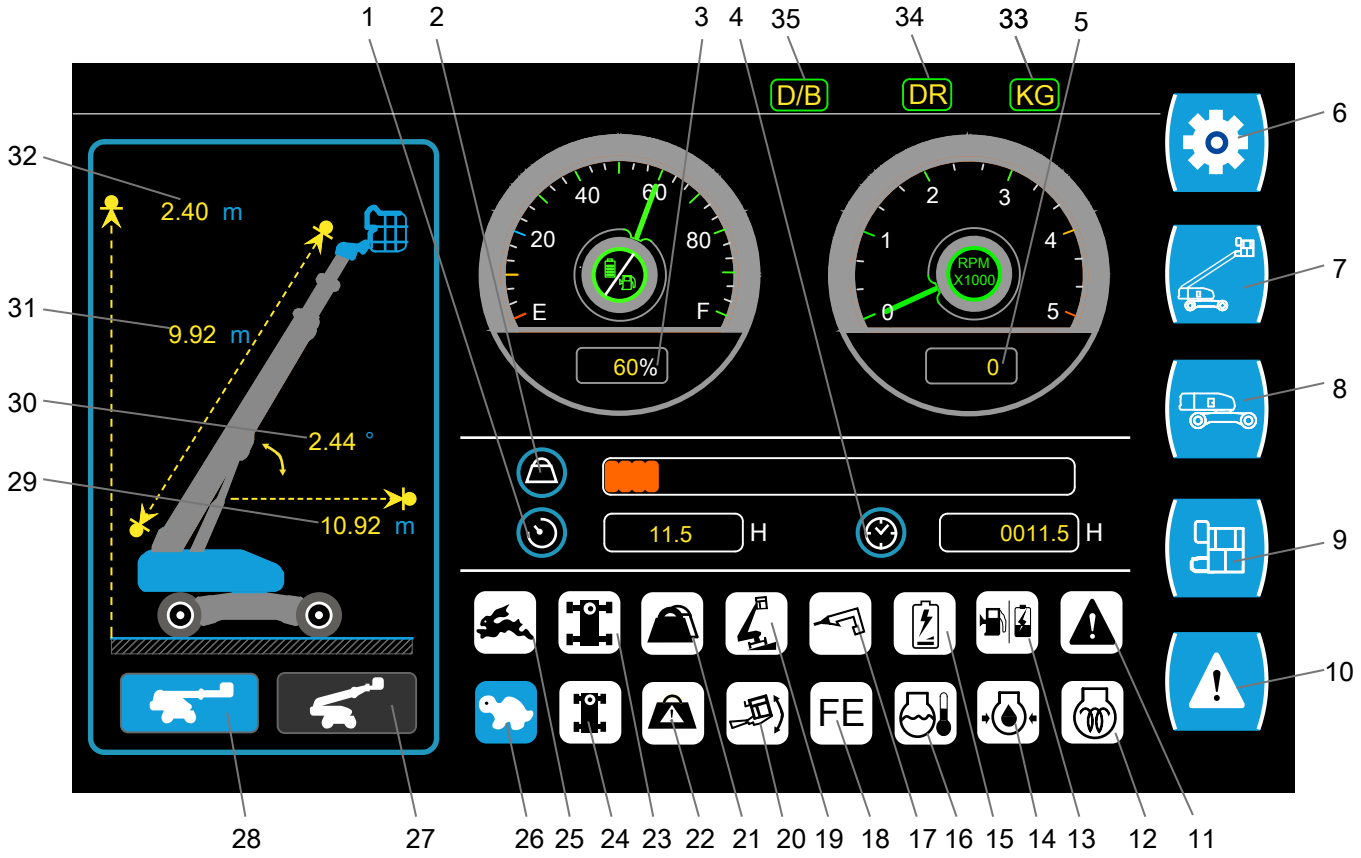

Figure 6-2

Table 6-2

1. Current work hours	**13.** Low battery alarm	**25.** Not used
2. Platform load	**14.** Not used	**26.** Not used
3. Battery gauge	**15.** Low battery alarm	**27.** Operating position
4. Accumulated work hours	**16.** Not used	**28.** Non-operating position
5. Tachometer	**17.** Inverter on	**29.** Boom horizontal reach
6. Setup menu	**18.** Not used	**30.** Boom angle above horizontal
7. Machine info	**19.** Chassis tilt alarm	**31.** Boom length
8. Turntable info	**20.** Platform tilt alarm	**32.** Platform height
9. Platform info	**21.** Heavy load indicator	**33.** Overload limit
10. Alarm message	**22.** Overload alarm	**34.** Drive limit (operating position)
11. Fault alarm	**23.** Not used	**35.** Drive and boom functions allowed

12. Not used	**24.** Not used	

Note:

1. When the Overload Limit symbol appears, if the platform is overloaded, a series of functions will be restricted if the machine is in operating position. Details are provided below.
2. When the Drive Limit symbol appears, it indicates the drive function is restricted if the machine is in operating position.
3. When the Drive & Boom Function Allowed symbol appears, it indicates the drive and boom functions are allowed to operate simultaneously.

⚠ WARNING

UNSAFE OPERATION HAZARD

- **Unless in emergency situations, never operate the machine from the ground controller if there are still persons on the platform.**
- **Never operate the machine if any control handle or switch that controls the platform movement does not return to the OFF position after being released.**

⚠ WARNING

COLLISION HAZARD

Before operating the boom, ensure the area near or under the platform is clear of persons or obstructions.

Preparation



1. Turn the Ground/Platform select switch at the ground controller to ground control position.
2. Pull out the emergency stop button at the ground controller to ON position.
3. Turn the key switch at the ground controls to ON position.
4. Ensure the relevant indicator light on the display should be on and no error should be present.

Horn button



Push the horn button, the horn should sound.

Emergency stop button



1. Push in the emergency stop button on the ground controller to OFF position, all functions will not work.
2. Pull out the emergency stop button on the ground controller to ON position, the machine will work normally.

Ground/Platform select switch

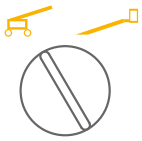

1. Turn the Ground/Platform select switch on the ground controller to ground control position. The functional operation should be only allowed on the ground controller, while the platform controller should be inoperative.
2. Turn the Ground/Platform select switch on the ground controller to platform control position. The functional operation should be only allowed on the platform controller, while the ground controller should be inoperative.

Enable switch



1. Move each function switch without moving the enable switch, the corresponding function shall be inoperative.
2. Move each function switch together with the enable switch, each function shall operate normally.

Main boom up/down switch

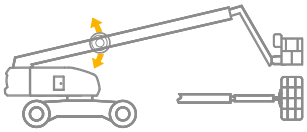

1. Move the enable switch and meanwhile move upwards the boom up/down switch, the main boom should rise smoothly.
2. Move the enable switch and meanwhile move downwards the boom up/down switch, the main boom should descend smoothly without shaking or abnormal noise, and the buzzer will sound.

Main boom telescope switch

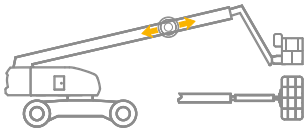

1. Move the enable switch and meanwhile move rightwards the main boom telescope switch, the main boom should extend smoothly.
2. Move the enable switch and meanwhile move leftwards the main boom telescope switch, the main boom should retract smoothly.

Turntable rotate switch

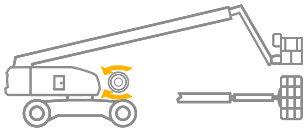

1. Move the enable switch and meanwhile move upwards the turntable rotate switch, the turntable should rotate counterclockwise.
2. Move the enable switch and meanwhile move downwards the turntable rotate switch, the turntable should rotate clockwise.

Platform level switch

⚠ WARNING

FALL HAZARD



The platform leveling function is only used for slight adjustment of the platform. Improper operation may result in unintended movement or fall of the load/occupants.

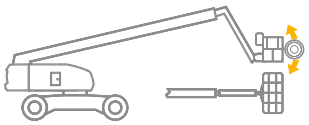

1. Move the enable switch and meanwhile move upwards the platform level switch, the platform should level up.
2. Move the enable switch and meanwhile move downwards the platform level switch, the platform should level down.

Platform rotate switch

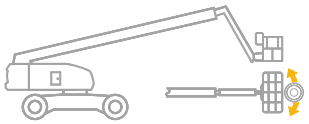

1. Move the enable switch and meanwhile move upwards the platform rotate switch, the platform should rotate counterclockwise.
2. Move the enable switch and meanwhile move downwards the platform rotate switch, the platform should rotate clockwise.

Jib up/down switch-TB20EJ Plus&22EJ Plus only

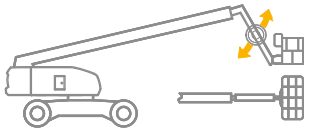

1. Move the enable switch and meanwhile move upwards the jib up/down switch, the jib boom shall go up.
2. Move the enable switch and meanwhile move downwards the jib up/down switch, the jib boom shall go down and the buzzer will sound.

Emergency power switch

NOTICE

- *The emergency power switch is only used for a short period of time (to fully lower the platform from the maximum degree and length) when the power device fails.*
- *When the emergency power is in use, do not operate two or more functions simultaneously, otherwise the auxiliary motor and pump will get overloaded.*



Move both the emergency power switch and each function switch/handle, the corresponding function should operate normally.

Buzzer

The buzzer shall give a sound-light alarm at variable frequency when any of the following situations occur:

- Main boom or jib boom down
- Machine overloaded
- Machine tilted
- Length sensor faulted
- Angle sensor faulted
- Other faults

TESTING THE PLATFORM CONTROLLER

NOTICE

All the tests of the platform controller should be completed within one cycle.

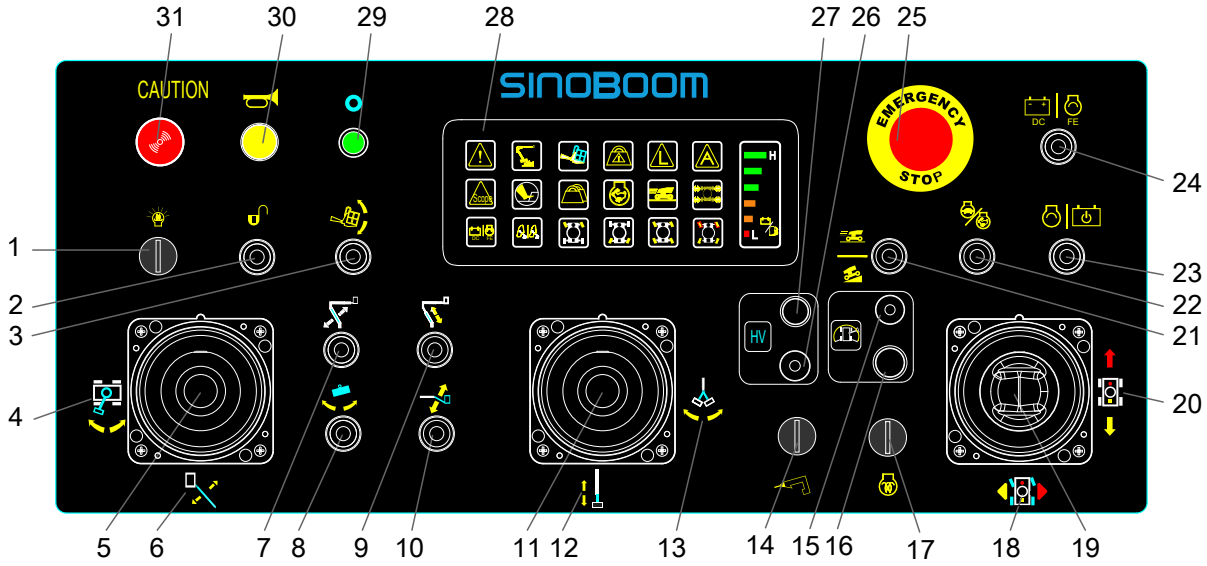

Figure 6-3 Platform controller

Table 6-3

1. Work light switch (if equipped)	**12.** Main boom telescope direction	**23.** Emergency power switch
2. Release switch (if equipped)	**13.** Not used	**24.** Not used
3. Platform level switch	**14.** Inverter switch	**25.** Emergency stop button
4. Turntable rotate direction	**15.** Rear position indicator light	**26.** Not used
5. Main boom lift/turntable rotate control handle	**16.** Rear position travel drive switch	**27.** Not used
6. Main boom lift direction	**17.** Glow plug switch (not used)	**28.** Fault panel indicator light
7. Not used	**18.** Steer direction	**29.** Power indicator light
8. Platform rotate switch	**19.** Drive/steer control handle	**30.** Horn button
9. Not used	**20.** Drive direction	**31.** Buzzer button
10. Jib up/down switch-TB20EJ Plus&TB22EJ Plus only	**21.** Drive high/low speed select switch	
11. Main boom telescope/jib rotate (not used) control handle	**22.** Not used	

⚠ WARNING

UNSAFE OPERATION HAZARD

- **Unless in emergency situations, never operate the machine from the ground controller if there are still persons on the platform.**
- **Never operate the machine if any control handle or switch that controls the platform movement does not return to the OFF position after being released.**
- **Do not remove, alter or disable the foot switch by adding a block or any other ways to prevent severe death or injury.**

⚠ WARNING

COLLISION HAZARD

Before operating the boom, ensure the area near or under the platform is clear of persons or obstructions.

Preparation



1. Turn the Ground/Platform select switch at the ground controller to Platform.
2. Pull out the emergency stop buttons at both ground and platform controller to ON position.
3. Turn the key switch at ground controller to ON position.
4. Ensure the power indicator light is on and no error message is present.

Power indicator light



Light on indicates the platform controller is normally powered.

Horn button



Push the horn button, the horn should sound.

Foot switch

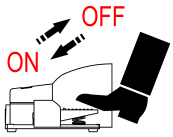

1. Release the foot switch, and directly move any function switch/handle, the function should not operate and the buzzer should sound.
2. Depress the foot switch and meanwhile move any function switch/handle, the function should operate.
3. Move any function switch and then depress the foot switch, the function should not operate and the buzzer should sound.
4. Depress the foot switch and 7 seconds later move any function switch/handle, the function should not operate and the buzzer should sound.

Emergency stop button



1. Push in the emergency stop button on the platform controller to OFF position, all functions should be inoperative.
2. Pull out the emergency stop button on the platform controller and ground platform to ON position. The machine can work normally.
3. Push in the emergency stop button on the ground controller to OFF position and pull out the emergency stop button on the platform controller to ON position, all functions should be inoperative.

Drive function



1. Depress the foot switch and push forward the Drive/Steer control handle, the machine shall move forward smoothly without noticeable impact in startup; when the handle is released, the machine should be held reliably.
2. Depress the foot switch and pull backward the Drive/Steer control handle, the machine should move reverse smoothly without noticeable impact in startup; when the handle is released, the machine should be held reliably.

Note: The drive speed is in direct proportion to the stroke of control handle.

Steer function



1. Depress the foot switch and push forward the Drive/Steer control handle, and press the left side of the thumb rocker switch on top of the drive control handle, the machine should steer left.
2. Depress the foot switch and push forward the Drive/Steer control handle, and press the right side of the thumb rocker switch on top of the drive control handle, the machine should steer right.

Note: The steering drive speed is in direct proportion to the stroke of control handle.

Drive high/low speed select switch

⚠ WARNING

TIPPING HAZARD



The machine must be driven at low speed when not on a level surface.

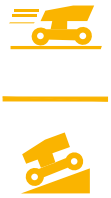

1. With the machine traveling in stowed position, push upward the drive high/low select switch, the drive speed shall be switched to high speed, and the high drive speed indicator light shall be lit.

   Note:

   - Before the machine traveling in stowed position, if the drive high/low speed select switch is left in high speed position, after the drive function is activated, the machine will start to run at high speed immediately.
   - With the machine traveling in stowed position, by pushing upward the drive high/low speed select switch, the machine will start to run at high drive speed immediately.

   Make sure the surrounding area is free of obstructions or persons before performing the above operations to avoid colliding with obstructions or persons. Besides, the operator shall pay attention to personal safety.
2. With the machine traveling in stowed position, pull down the drive high/low speed select switch, the drive speed shall be switched to low speed, and the high drive speed indicator light shall be off.

Turntable rotate



1. Depress the foot switch and move leftwards the main boom lift/turntable rotate proportional control handle, the turntable should rotate clockwise.
2. Depress the foot switch and move rightwards the main boom lift/turntable rotate proportional control handle, the turntable should rotate counterclockwise.

Note: The turntable rotate speed is in direct proportion to the stroke of control handle.

Main boom up/down



1. Depress the footswitch and push forward the main boom lift/turntable rotate proportional control handle, the main boom should lift smoothly without shaking or abnormal noise.
2. Depress the footswitch and pull backward the main boom lift/turntable rotate proportional control handle, the main boom should descend smoothly without shaking or abnormal noise, and the buzzer should sound.

Note: The main boom up/down speed is in direct proportion to the stroke of control handle.

Main boom telescope

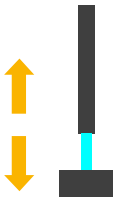

1. Depress the foot switch and pull backward the main boom telescope/jib rotate proportional control handle, the main boom should extend smoothly without shaking or abnormal noise.
2. Depress the foot switch and push forward the main boom telescope/jib rotate proportional control handle, the main boom should retract smoothly without shaking or abnormal noise.

Note: The main boom telescope speed is in direct proportion to the stroke of control handle.

Platform level switch

⚠ WARNING

FALL HAZARD



The platform leveling function is only used for slight adjustment of the platform. Improper operation may result in unintended movement or fall of the load/occupants.

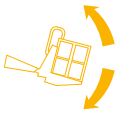

1. Depress the footswitch and push upwards the platform level switch, the platform should level up.
2. Depress the footswitch and pull downwards the platform level switch, the platform should level down.

Platform rotate switch



1. Depress the footswitch and move leftwards the platform rotate switch, the platform should rotate clockwise.
2. Depress the footswitch and move rightwards the platform rotate switch, the platform should rotate counterclockwise.

Jib up/down switch-TB20EJ Plus & TB22EJ Plus only

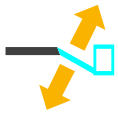

1. Depress the footswitch and move upwards the jib up/down switch, the jib boom should go up.
2. Depress the footswitch and move downwards the jib up/down switch, the jib boom shall go down, and the buzzer should sound.

Emergency power switch

NOTICE

- *The emergency power switch is only used for a short period of time (to fully lower the platform from the maximum angle) when the power device fails.*
- *When the emergency power is in use, do not operate two or more functions simultaneously, otherwise the auxiliary motor and pump will get overloaded.*



Depress the foot switch and move both the emergency power switch and any function switch/ handle, the corresponding function shall operate normally.

Rear position indicator light

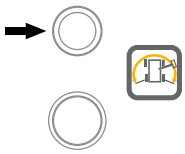

When the boom rotates beyond the rear wheels, the drive function should close and the rear position indicator light should flash at an interval of 0.5s.

Rear position travel drive switch

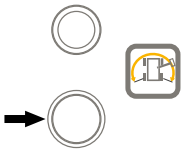

When the rear position indicator light is flashing, the drive function should close. Move the rear position travel drive switch, the light shall lit and the drive function should resume.

NOTICE

At this time, the machine will run and steer in opposite direction as indicated.

Work light switch (if equipped)



Move the work light switch, the work light should be on/off.

Buzzer

The buzzer should give a sound-light alarm at variable frequency in the event of the following situations:

- Main boom or jib boom down
- Machine overloaded
- Machine tilted
- Length sensor faulted
- Angle sensor faulted
- Other faults

System distress indicator light



The system distress indicator light will be lit under the following conditions:

- CAN bus error
- Other faults

Chassis tilt indicator light



When the machine is tilted, the alarm should sound and the chassis tilt indicator light should be on.

NOTICE

Should the chassis tilt indicator light come on when the boom is raised or extended, retract and lower the boom to stowed position.

Platform tilt indicator light



When the platform tilts excessively, the platform tilt indicator light should be on.

Overload indicator light



When the load on the platform exceeds the rated platform capacity, the overload indicator light should be on.

Length sensor malfunction indicator light



When the length sensor malfunctions, the length sensor malfunction indicator light should be on.

Angle sensor malfunction indicator light



When the angle sensor malfunctions, the angle sensor malfunction indicator light should be on.

Range limit indicator light



When the boom is beyond the working range, the range limit indicator light should be on.

Foot switch indicator light



When the foot switch is pressed down, the foot switch indicator light should be on.

Heavy-load indicator light



When the platform operates within the heavy-load working envelope, if the load applied to the platform exceeds the light rated load, the heavy-load indicator light will come on.

Drive high speed indicator light



When the machine runs at high speed, the drive high speed indicator light should be on.

FE/DC mode indicator light



DC represents the electric mode, and FE represents the engine mode.

Main boom auto mode indicator light



When the main boom is in the auto control mode, the indicator light will be lit.

TESTING THE DRIVE SPEED

1. Depress the foot switch.
2. Slowly push forward the drive/steer control handle to full drive speed.
3. Move the drive high/low speed select switch upward on the platform controller to select the drive high speed.
4. The test results should be as shown in the table below:

Table 6-4

POSITION	MAX DRIVE SPEED
Operating	1.1km/h (0.68mph)
Non-operating	4.8km/h (3 mph)

NOTICE

If the drive speed exceeds the test results as shown above by 10%, please immediately tag and remove the machine from service.

TESTING THE EMERGENCY LOWERING FUNCTION

When the electric motor fails, depending on the actual conditions, move the emergency power switch on the ground or platform controller to start the hydraulic pump, and meanwhile move the function switch to enable the boom lowering, retracting and rotating.

NOTICE

- *The emergency power switch serves only for a short time of use (with the platform lowered to the maximum degree possible) when the electric motor fails.*
- *When the emergency power is in use, do not operate two or more functions simultaneously, otherwise the auxiliary motor and pump will get overloaded.*

Operating from the ground：

1. Turn the Ground/Platform select switch on the ground controller to the ground control position.
2. Pull out the emergency stop button on the ground controller to the ON position.
3. Turn the key switch on the ground controller to the ON position.
4. Move and the hold the emergency power switch on the ground controller.
5. Move the corresponding boom function switch on the ground controller to lower the platform.

Operating from the platform：

1. Turn the Ground/Platform select switch on the ground controller to the platform control position.
2. Pull out the emergency stop buttons on both the ground and platform controllers to the ON position.
3. Turn the key switch on the ground controller to the ON position.
4. Move and the hold the emergency power switch on the platform controller.
5. Move the corresponding boom function switch on the platform controller to lower the platform.

TESTING THE TILT PROTECTION SYSTEM

1. Start the machine.
2. With the machine in non-operating position, flip the level switch to exceed 5°in X (left-to-right)/Y (front-to-back) direction.
3. The tilt alarm sounds and the chassis tilt indicator light flashes, no function is restricted.
4. With the machine in operating position, flip the level switch to exceed 5°in X (left-to-right)/Y (front-to-back) direction.
5. The tilt alarm should sound with the chassis tilt indicator light flashing, some functions are restricted, but the boom retracting, turntable rotating and boom lowering when retracted until less than 1.2m（3ft 11in）should be allowed.
6. Place two wooden blocks under the two wheels on the left or right side of the machine. The wooden block measures 750×250×188mm（2.46×0.82×0.62ft）. With the machine in non-operating position, drive it onto the two wooden blocks.
7. The tilt alarm should sound with the chassis tilt indicator light flashing, no function should be restricted.
8. Drive the machine off and remove the wooden blocks.
9. Place two wooden blocks under the two wheels on the front or rear of the machine. The wooden block measures 750×250×218mm（2.46×0.82×0.72ft）. With the machine in operating position, drive it onto the two wooden blocks.
10. The tilt alarm should sound with the chassis tilt indicator light flashing, some functions are restricted, but the boom retracting, turntable rotating and boom lowering when retracted until less than 1.2m（3ft 11in）should be allowed.
11. Retract and lower the boom, drive off the machine in non-operating position and remove the wooden blocks.

TESTING THE ENVELOPE RESTRICTION

Max boom outreach

0kg≤platform capacity≤300kg (661 lb)

1. Turn the Ground/Platform select switch at ground controls to the Ground.
2. Pull out the emergency stop button at the ground controls to ON position.
3. Turn the key switch at ground controls to ON position.
4. Using the main boom lift and jib up/down function, adjust the main boom and jib boom (if equipped) to horizontal.
5. Using the main boom telescope function, extend the main boom.
6. TB20EJ Plus: when the boom extends to the farthest (the ground display reads 15.4m/50ft 6in of boom length), the buzzers at the ground and platform controls should be sounding, boom further extending and boom up/down should be restricted, but boom retracting and turntable rotating should be allowed.
7. TB22EJ Plus: when the boom extends to the farthest (the ground display reads 14.3m/46ft 11in of boom length), the buzzers at the ground and platform controls should be sounding, boom further extending and boom up/down should be restricted, but boom retracting and turntable rotating should be allowed.
8. Using the main boom telescope switch, retract the boom.
9. The boom can be fully retracted.

300kg (661 lb)≤platform capacity≤454kg (1000 lb)

1. Turn the Ground/Platform select switch at ground controls to the Ground.
2. Pull out the emergency stop button at the ground controls to ON position.
3. Turn the key switch at ground controls to ON position.
4. Using the main boom lift and jib up/down function, adjust the main boom and jib boom (if equipped) to horizontal.
5. Using the main boom telescope function, extend the main boom.
6. TB20EJ Plus: when the boom extends to the farthest (the ground display reads 13.85m/45ft 5in of boom length), the buzzers at the ground and platform controls should be sounding, boom further extending and boom up/down should be restricted, but boom retracting and turntable rotating should be allowed.
7. TB22EJ Plus: when the boom extends to the farthest (the ground display reads 12.7m/41ft 8in of boom length), the buzzers at the ground and platform controls should be sounding, boom further extending and boom up/down should be restricted, but boom retracting and turntable rotating should be allowed.
8. Using the main boom telescope switch, retract the boom.
9. The boom can be fully retracted.

Max boom up/down angle

1. Turn the Ground/Platform select switch at ground controls to the Ground.
2. Pull out the emergency stop button at the ground controls to ON position.
3. Turn the key switch at ground controls to ON position.
4. Using the main boom lift and jib up/down function, adjust the main boom and jib boom (if equipped) to horizontal.
5. Using the main boom lift function, raise/lower the main boom to limits.
6. When the main boom is raised to the upper limit of lift angle (ground display reads 73°[±1°]), the boom should be prevented from further raising.
7. When the main boom is lowered to the lower limit of lift angle (ground display reads -15°[±1°]), the boom should be prevented from further lowering.
8. Using the boom telescope and up/down function, retract and lower the boom.
9. The boom can be fully retracted.

Note: The max allowable tolerance of the angle sensor is not greater than 0.5°within its full range of measurement.

TESTING THE WEIGHING SYSTEM

Before the test, fully raise and lower the boom and fully extend and retract the boom at least twice to ensure the pulley and track are adequately lubricated.

Table 6-5

MODES	TEST RESULTS
KG mode	**Under restricted configuration:** When the load does not exceed 454kg (1000 lb) , ensure that the platform is able to lift to the highest position. When the load exceeds 454kg (1000 lb) , the buzzer will sound continuously, the overload indicator light will flash, the display screen will indicate platform overload, all motion functions are restricted and will not resume until the excessive load is removed. **Under unrestricted configuration:** When the load does not exceed 300kg (661 lb) , ensure that the platform is able to lift to the highest position. when the load exceeds 300kg (661 lb) , the buzzer will sound continuously, the overload indicator light will flash, the display screen will indicate platform overload, all motion functions are restricted and will not resume until the excessive load is removed.
Non-KG mode	**Under restricted configuration:** When the load does not exceed 454kg (1000 lb) , ensure that the platform is able to lift to the highest position. When the load exceeds 454kg (1000 lb) , the buzzer will sound continuously, the overload indicator light will flash, the display screen will indicate platform overload, some motion functions will be restricted, but boom retracting, turntable rotating and boom lowering after fully retracted is allowed. All motion functions will not resume until the excessive load is removed. **Under unrestricted configuration:** When the load does not exceed 300kg (661 lb), ensure that the platform is able to lift to the highest position. When the load exceeds 300kg (661 lb), the buzzer will sound continuously, the overload indicator light will flash, the display screen will indicate platform overload, some motion functions will be restricted, but boom retracting, turntable rotating and boom lowering after fully retracted is allowed. All motion functions will not resume until the excessive load is removed.

⚠ WARNING

TIPPING HAZARD



While performing override operation on the machine, please avoid operation in a dangerous direction.

For overseas models, with the machine in the KG mode, if activating any function switch while flipping the emergency power switch after an overload alarm, the override operation should be performed, and the corresponding action can be performed. The time of the override operation and the actual weight on the platform are recorded on the display.

NOTICE

Override operation is an emergency operation in an emergency state. Before conducting any override operation, please make sure the surrounding area and the whole machine are in a safe state, try to avoid operation in a dangerous direction and ensure personal safety.

This Page Intentionally Left Blank

7 OPERATING THE MACHINE

⚠ WARNING

UNSAFE OPERATION HAZARD



Be sure to follow the instructions and safety rules in this manual. Failure to follow the instructions and safety rules in this manual may result in death or serious injury.

Do not operate this machine unless you have learned and practiced the rules for safely operating the machine as stated in this manual.

- **Know and understand the safety rules before continuing the next step.**
- **Avoid dangerous situations.**
- **Always check the machine before operating.**
- **Select appropriate machinery and personal protective equipment (- hard hats, safety belt and gloves, etc.) for the task.**
- **Always perform a pre-operation inspection.**
- **Always perform a pre-operation function test before using the machine.**
- **Check the work site.**
- **Check the safety decals/ nameplate on the machine.**
- **Only use the machine according to the instructions in this manual and for its intended purpose.**

This section provides specific instructions for all the aspects of machine operation. The operator is responsible for following all the safety rules and instructions in this manual.

Use this machine to transport people and tools to the workplace. It is unsafe and dangerous to use this machine for purposes other than what is stated in this manual.

Only trained and authorized personnel may operate the machine. If more than one operator uses the same machine at different times of the same work shift, they must all be qualified operators and follow all the safety rules and instructions in this *Operation Manual*.

Each new operator must perform the pre-operation inspection, pre-operation function test, and workplace checks before using the machine.

STABILITY

The machine stability is based on two conditions which are called forward stability and backward stability.

⚠ WARNING

TIPPING HAZARD



Do not overload the platform or operate the machine on tilted surface to prevent forward or backward tipping.

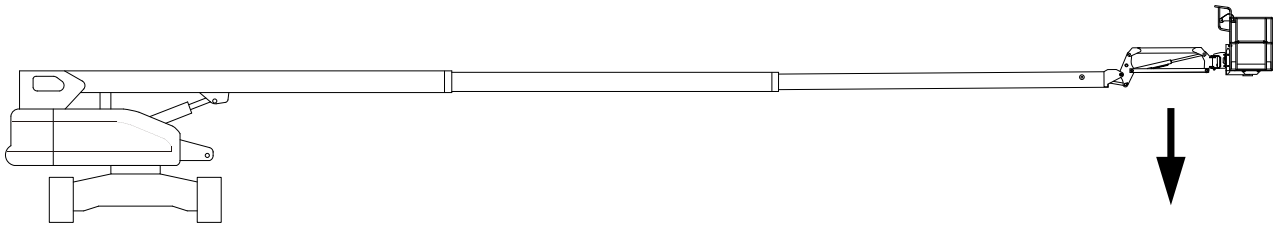

Figure 7-1 Position of least forward stability

1. Boom fully extended;
2. Boom kept horizontal;
3. Turntable rotated 90°;
4. The machine will tip over in the direction as indicated by the arrow if overloaded or operated beyond the limits of the maximum operating slope.

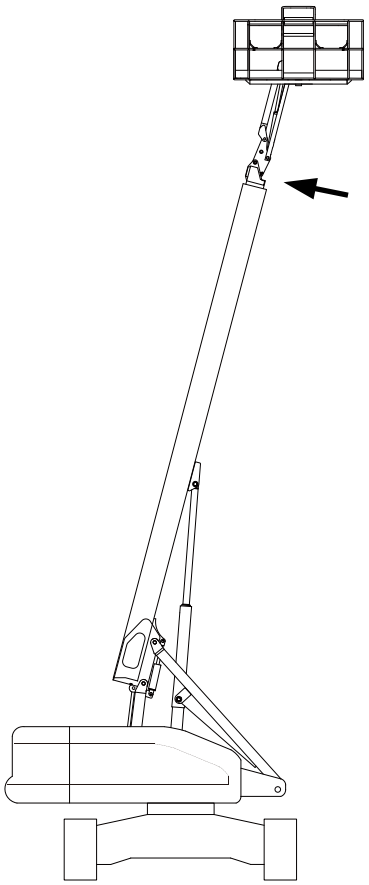

Figure 7-2 Position of least backward stability

1. Boom fully retracted;
2. Main boom fully elevated;
3. Jib fully elevated;
4. Turntable rotated 90° ;
5. Platform rotated 90° ;
6. The machine will tip over in the direction as indicated by the arrow if overloaded or operated beyond the limits of the maximum operating slope.

EMERGENCY STOP

- Push in the emergency stop button on the platform controller to OFF, all the functions at the platform controls will get inoperative.
- Push in the emergency stop button on the ground controller to OFF, all the functions at both the ground controls and platform controls will get inoperative.
- Push the power disconnect switch on the left side of chassis to OFF, the system power will be disconnected and all functions will get inoperative.

The power disconnect switch is located as shown in the Figure below.

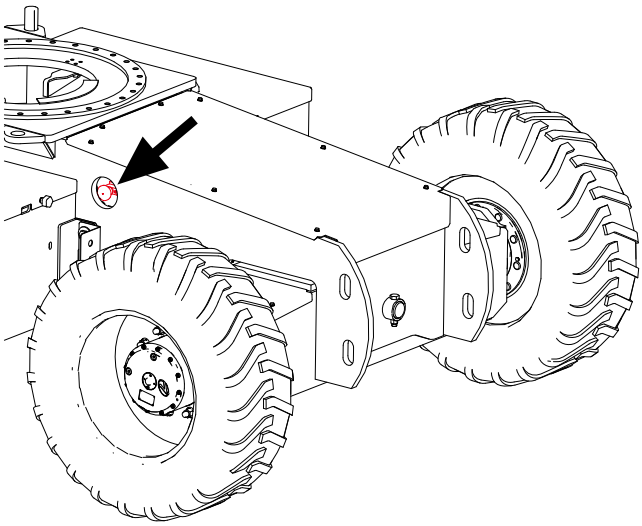

Figure 7-3

EMERGENCY LOWERING

When the electric motor fails, move the emergency power switch on the turntable or platform controller as appropriate for emergency lowering of the platform.

For the specific operating procedure, please refer to ***Testing the Emergency Lowering Function, page 6-12***.

EMERGENCY OPERATING

When the operator is unable to control the machine:

1. Other personnel should operate the machine from the ground controls only as required by the safety rules.
2. Other qualified personnel on the platform may use the platform controls. Do not continue operation if the controls do not function properly.
3. Cranes, forklift trucks or other equipment can be used to stabilize motion of the machine.

When the platform or boom is caught overhead:

If the platform or boom becomes jammed or snagged in overhead structures or equipment, rescue all people in the platform before freeing the machine.

EMERGENCY TOWING/ DRAGGING

⚠ WARNING

UNSAFE OPERATION HAZARD

- **Unless in case of emergency situations, machine malfunction, power loss or loading/unloading, it is strictly prohibited to tow or drag the machine.**
- **When towing/dragging the machine, there should be no person in the platform.**
- **Before towing/dragging the machine, ensure that the machine is in stowed position with the turntable securely locked and platform free of any tools or objects.**
- **Do not tow/drag the machine with the engine started or the drive hub engaged.**
- **The machine must on a level surface or secured before releasing the brake.**
- **The towing/dragging of the machine must follow the local laws and traffic rules.**

1. Choke wheels securely to prevent motion of the machine.
2. Ensure the travel path is free of obstacles and the main power switch is off.
3. Loosen the bolts on each drive hub, then reverse the cover of drive hub.
4. Tighten the bolts, till now the drive hub is disengaged and ready for towing/dragging.

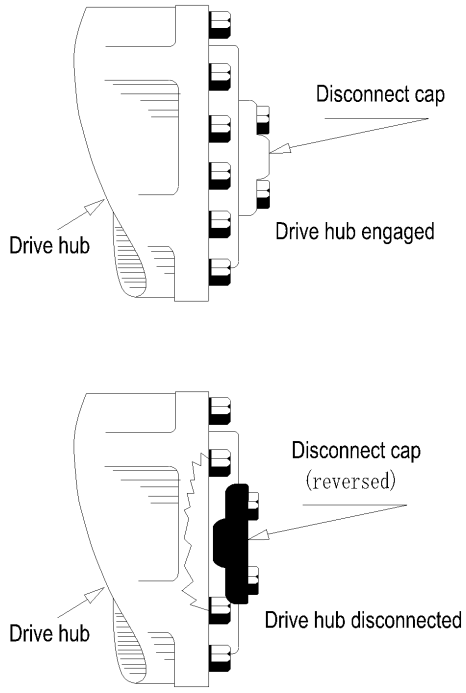

Figure 7-4

5. After moving the machine, position machine on a firm level surface.
6. Choke the wheels securely to prevent motion of the machine.
7. Loosen the bolts on each drive hub, then reverse the cover of drive hub.
8. Tighten the bolts and engage the drive hub.
9. Remove the chokes as necessary.

NOTICE

The allowable towing speed is 3km/h (1.9mph)，the maximum towing distance is 1km (0.6mile)

OPERATION FROM GROUND

⚠ WARNING

UNSAFE OPERATION HAZARD

- **Unless in emergency situations, do not operate the machine from the ground controller when there are personnel in the platform.**
- **Do not operate the machine if any control handle or switch does not return to off position after being released.**

⚠ WARNING

COLLISION HAZARD

When operating the boom, be sure the area around or under the platform is free of persons or obstacles.

Before operation:

1. Be sure the battery is well connected before operating the machine.
2. Turn the Ground/Platform select switch on the ground controller to Ground.
3. Pull out the red emergency stop button on the ground controller to the ON position.
4. Turn the key switch on the ground controller to the ON position.

To position platform:

1. Move the enable switch and meanwhile move upwards/downwards the boom up/down switch to raise or lower the main boom.
2. Move the enable switch and meanwhile move rightwards/leftwards the boom telescope switch to extend or extract the main boom.
3. Move the enable switch and meanwhile move downwards/upwards the turntable rotate switch to rotate the turntable clockwise or counterclockwise.
4. Move the enable switch and meanwhile move upwards/downwards the platform level switch to level up or down the platform.

⚠ WARNING

FALL HAZARD



The platform level switch can only be used for slight leveling of the platform. Improper use may cause the load/occupant to shift or fall.

5. Move the enable switch and meanwhile move upwards/downwards the platform rotate switch to rotate the platform anticlockwise or clockwise.
6. Move the enable switch and meanwhile move upwards/downwards the jib up/down switch to raise or lower the jib boom (TB20EJ Plus&22EJ Plus only).

To drive:

The drive function cannot be enabled on the ground controller.

To steer:

The steer function cannot be enabled on the ground controller.

OPERATION FROM PLATFORM

⚠ WARNING

UNSAFE OPERATION HAZARD



- **Unless in emergency situations, do not operate the machine from the ground controller when there are personnel in the platform.**
- **Do not operate the machine if any control handle or switch does not return to off position after being released.**

⚠ WARNING

COLLISION HAZARD



When operating the boom, be sure the area around or under the platform is free of persons or obstacles.

Before operation:

1. Turn the Ground/Platform select switch on the ground controller to Ground.
2. Pull out the red emergency stop buttons on both the ground and platform controllers to the ON position.
3. Turn the key switch on the ground controller to the ON position.

To position platform:

1. Depress the footswitch and meanwhile move forward/backward the main boom lift/turntable rotate control handle to raise or lower the main boom.
2. Depress the footswitch and meanwhile move backward/forward the main boom telescope/jib rotate control handle to extend or retract the main boom.
3. Depress the footswitch and meanwhile move leftwards/rightwards the main boom lift/turntable rotate control handle to rotate the turntable clockwise or counterclockwise.
4. Depress the footswitch and meanwhile move upwards/downwards the platform level switch to level up/down the platform.

⚠ WARNING

FALL HAZARD



The platform level switch can only be used for slight leveling of the platform. Improper use may cause the load/occupant to shift or fall.

5. Depress the footswitch and meanwhile move leftwards/rightwards the platform rotate switch to rotate the platform clockwise or counterclockwise.
6. Depress the footswitch and meanwhile move upwards/downwards the jib up/down switch to raise or lower the jib boom (TB20EJ Plus&TB22EJ Plus only).

To drive:

1. Depress the footswitch and meanwhile move forward/backward the steer/drive joystick to drive the machine forward or backward.
2. Speed up: slowly move the joystick off center.
3. Speed down: slowly move the joystick toward center.
4. Stop: return the joystick to center or release the footswitch.

When the boom is in operating position, the drive speed of the machine will be restricted.

To steer:

Depress the footswitch and meanwhile move forward the drive/steer control handle and press the left/right side of the thumb rocker switch on top of the handle to steer left/right.

To select drive speed:

The machine in non-operating position can run at two drive speed modes (high/low speed).

1. In the process of driving, move upward the drive high/low speed select switch to switch to high drive speed.
2. In the process of driving, move downward the drive high/low speed select switch to switch to low drive speed.

⚠ WARNING

TIPPING HAZARD



The machine must be driven at low speed when tilted.

When in operating position, the machine can only drive at operating speed, moving upward the drive high/low speed select switch will not enable the high speed mode.

DRIVING ON A SLOPE

⚠ WARNING

TIPPING HAZARD



- **Do not operate the machine on the slope exceeding the maximum slope rating (5°).**
- **Do not drive the machine across the slope exceeding the maximum side slope rating (14°).**
- **Do not drive the machine on the slope exceeding the machine gradeability.**

Before driving on a slope：

1. Determine the gradeability (climbing ability) of the machine.

Maximum gradeability:

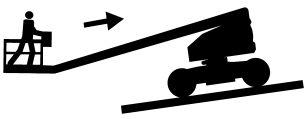

Uphill: 35%/19°

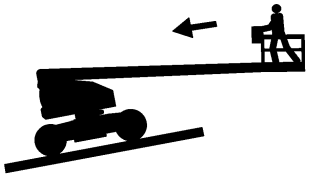

Downhill: 30%/17°

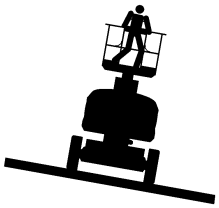

Side slope: 25%/14°

2. Ensure the machine is in stowed position.
3. Ensure the slope grade is within the limits of the machine gradeability.

NOTICE

Gradeability refers to the maximum permissible percentage of the slope (or called slope grade as below) when the machine is on solid ground with sufficient traction and the platform is carrying only one person. As the weight of the machine's platform increases, the machine's gradeability reduces.

To determine the slope grade：

1. Use a carpenter's level, a straight piece of wood (at least 1 m [3.3 ft] long) and a tape measure.
2. Measure the height H and length/distance L of the slope.

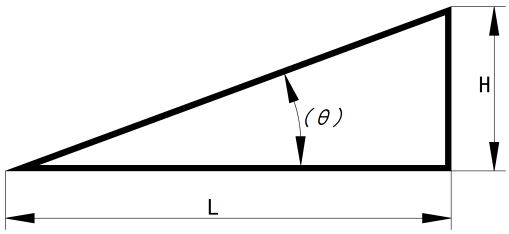

Figure 7-5

3. Slope grade= H/L x 100%.

NOTICE

The machine must not drive for over 2min on the maximum permissible slope grade to prevent the tires running suspended.

CHARGING THE BATTERY

The batteries used include 3 types: lead acid, maintenance-free lead acid and lithium batteries, and the latter two batteries do not need maintenance.

⚠ WARNING

UNSAFE OPERATION HAZARD



- **Make sure to read and follow the manufacturer's recommendations on how to use and maintain the battery.**
- **The battery contains sulfuric acid and can generate explosive mixture of hydrogen and oxygen. Keep the battery far away from sparks and fire (including cigarette and smoke) to avoid explosion.**
- **Do not charge the battery under direct sunshine.**
- **Charge the battery on a well-ventilated site.**
- **Do not expose the battery on charging to water or rain.**
- **Charge the battery at the proper voltage as indicated on the decal.**
- **If the battery is topped by a cover or other objects, remove them before charging to ensure the flammable gas produced during charging can be fully dispersed. Do not close the cover until 30 minutes after charging is completed. The charging site should be well-ventilated and if charging the battery indoor, a fan can be used for better ventilation.**

⚠ WARNING

DAMAGED BATTERY HAZARD



- **Only use the charger provided by the manufacturer, and only connect the charger to a grounded 3-phase power outlet.**
- **Do not reverse the positive and negative poles of the battery for charging.**
- **Charge the battery as soon as possible once the battery is depleted.**
- **Do not deplete the battery more than 80% of the standard capacity, as frequent over-depletion of the battery will shorten the battery life.**
- **The battery must be charged fully, as intermittent charging will bring damage to the battery.**

⚠ WARNING

ELECTROCUTION HAZARD





- **Contact with live circuit may cause serious injury or death. Make sure to wear goggles, gloves and protective clothing.**
- **Remove all rings, watches and other accessories.**

NOTICE

- *The machine is delivered with a battery level less than 80%, therefore it is recommended that the battery be fully charged after receiving the shipment.*
- *The charging current should not exceed the max allowable charging current as specified on the battery.*
- *The charging voltage should not exceed the max allowable voltage as specified on the battery.*
- *The charging temperature range is -10℃~45℃. If a charge heating system is available, the temperature range is -20℃~45℃.*

Charging lead acid batteries (requiring maintenance)

Charging

1. Check the battery level on the display of ground controller. When the battery level is less than or equal to 20%, an alarm will be triggered and the battery needs to be charged immediately. For the purpose of not affecting the normal operation of the machine, it is recommended to charge the battery when the battery level is lower than 30%.

   Alternatively, open the cover on the battery and measure the density of the electrolyte. If the density of the electrolyte is less than 1.13kg/l, it means that the battery has been over-discharged (the depth of discharge exceeds 80%) and must be charged immediately. This should be avoided, as frequent over-discharge will reduce the service life of the battery.

   Note: Measure the temperature of the electrolyte. If it is higher than 45°C, wait for the battery to cool before continuing the following steps.
2. Completely power off the machine.
3. Connect the plug between the battery and the charger cable. If the machine is equipped with an automatic water refilling system, ensure that the refilling pipe is connected.
4. Connect the battery charger to a grounded AC circuit. When the battery is fully charged, the corresponding indicator light will be on.
5. After charging is complete, disconnect the cable plug from the battery to the charger.

Adding water

NOTICE

- *The electrolyte level should be checked after each charging, and if the level is found to be low, add water in time.*
- *The water shall be added after charging. Adding water before charging may cause acid overflow during charging.*

1. For batteries equipped with an automatic water refilling system, when the electrolyte is at the lowest level with the battery fully charged (the white dot of the battery observation hole is not at the top), add water immediately. It is recommended to use an automatic water refilling machine for refilling, with the operation steps as follows:
   1) Open the bucket cover of the water refilling machine.
   2) Add deionized water.
   3) Put back the bucket cover and connect the water refilling plug.
   4) Connect the quick connector between the water refilling machine and the battery and turn on the power switch to start automatic water refilling.
   5) After water refilling is completed, the automatic water refilling system will automatically stop.
   6) Turn off the power switch and disconnect the water refilling plug to complete water refilling.
2. If the battery is not equipped with an automatic water refilling system, check the electrolyte level after charging. If the level is lower than the allowable height (the white dot of the battery observation hole is not at the top), wear gloves to add conforming distilled water or deionized water to the standard level (1-2cm above the minimal level of the water filler plug). Never add any acid solution.

⚠ WARNING

CHEMICAL BURN HAZARD



- Avoid battery acid escaping out or contact with unprotected skin, and if does, wash the skin with a large amount of clear water and seek medical assistance immediately.
- If excessive distilled water is added, suck out the excessive distilled water until normal level is reached. If excessive distilled water is added and the electrolyte overflows, use water mixed with bicarbonate (baking soda) to neutralize the acid, and blot up the liquid with a suction pipe.

Charging maintenance-free batteries

1. Check the battery level on the display of ground controller. When the battery level is less than or equal to 20%, an alarm will be triggered and the battery needs to be charged immediately. For the purpose of not affecting the normal operation of the machine, it is recommended to charge the battery when the battery level is lower than 30%.
2. Completely power off the machine.
3. Connect the charger to a grounded AC circuit. The indicator light will be on after the battery is fully charged.
4. After charging, disconnect the cable plug from the battery to the charger.

Fast charging mode

Only for machines with a fast charger.

Method of connecting charger to input AC power supply

⚠ WARNING

ELECTROCUTION HAZARD



- **Contact with live circuit may cause serious injury or death. Make sure to wear goggles, gloves and protective clothing.**



- **Remove all rings, watches and other accessories.**

NOTICE

- *Please strictly follow the wiring diagram for wiring.*

1. Input of 220V AC power source:

   1) When the input voltage of power supply is 220V and the diameter of the charging cable is ≥2.5mm², the charging power can be 3KW. The wiring method is as shown in the figure.

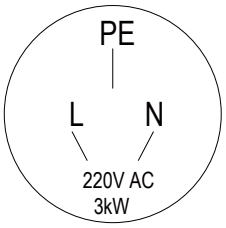

Figure 7-6

   2) When the input voltage of power supply is 220V and the diameter of the charging cable is ≥4mm², the charging power can be 6KW (with 3kW compatible). The wiring method is as shown in the figure.

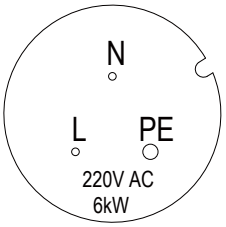

Figure 7-7

2. Input of 380V AC power source:

   When the input voltage of power supply is 380V and the diameter of the charging cable is ≥2.5mm², the charging power can be 6KW. The wiring method is as shown in the figure.

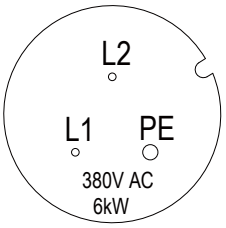

Figure 7-8

⚠ WARNING

UNSAFE OPERATION HAZARD



- **For input of 380V AC power source, make sure to connect wires according to the diagram, and do not connect with three-phase source via three wires, otherwise electrocution may occur, resulting in death or serious injury.**
- **For charging with 380V AC power source, the charger connects with 380V power source through 2-phase wires. Therefore, when multiple machines are charged at the same place simultaneously, make sure to consider the three-phase power balance of the grid.**

Fast charging switching method and steps

1. Connect the charging plug with the diameter of the charging cable ≥4mm² to the 220V power socket, or connect the charging plug with the diameter of the charging cable ≥2.5mm² to the 380V power socket.
2. For input of 220V AC power source, the low-power charging mode is selected by default. Find the selector button behind the battery box on the left side of the machine, and press and hold the selector button for 3s. Then, the loudspeaker will start to issue voice message and the machine will enter high-power charging mode. The low-power charging mode will be resumed after power failure. See the figure below for the position of the selector button:

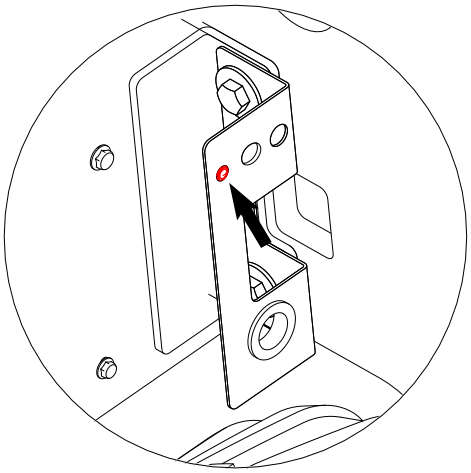

Figure 7-9

3. For input of 380V AC power source, the machine will enter high-power charging mode automatically.

This Page Intentionally Left Blank

8 TRANSPORTING AND LIFTING THE MACHINE

⚠ WARNING

TRANSPORTATION AND LIFTING HAZARD



- **Use a forklift or crane with the proper lifting capacity to lift the machine. Use good judgment and planned movement to control the machine.**
- **The transport vehicle must be parked on level ground.**
- **The transport vehicle must be secured from rolling when loading the machine.**
- **Ensure that the vehicle capacity, loading surface, belts or ropes are sufficient to support the weight of the machine, refer to *1 Machine Specifications, page 1-1*.**
- **Before driving the machine onto the transport vehicle, ensure that the slope is within the limit of the machine gradeability, refer to *1 Machine Specifications, page 1-1*.**
- **Before transportation and lifting, check if the rigging anchor point and its attached structure are in good condition.**
- **Be sure the machine is on a level surface or secured before releasing the brake.**
- **Never transport people on the machine while the machine is being towed or while the machine is engaged in towing or lifting operations.**
- **The machine should be transported following the local laws and traffic rules.**
- **When using a forklift or crane to lift the machine, prevent the machine from colliding with nearby objects.**
- **Lock the wheels of the machine after it has been loaded to prevent the machine from rolling.**

NOTICE

*Do not tow/drag the machine unless an emergency, failure or loss of power occurs. Refer to **Emergency Towing/Dragging, page 7-4**.*

LIFTING THE MACHINE WITH A CRANE

Follow these requirements when lifting the machine by crane:

1. The boom must be stowed while lifting the machine with a crane.
2. Ensure the boom is positioned in the same direction as the chassis travels.
3. Ensure the controllers and chassis components are safe and reliable.
4. Remove all loose parts of the machine.
5. Determine the center of gravity of the machine.

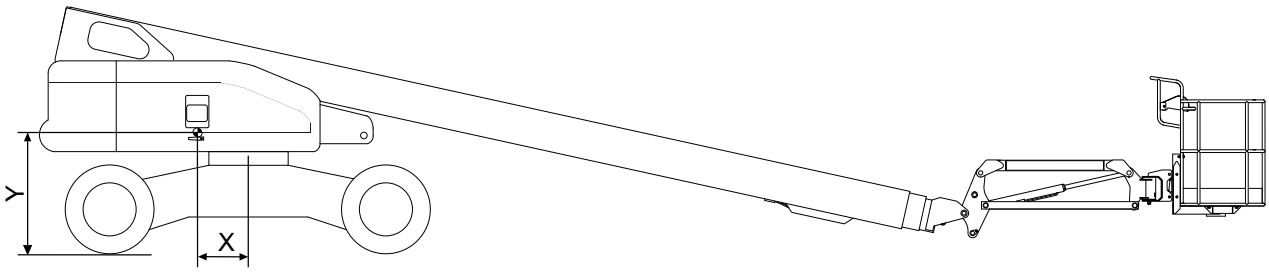

Figure 8-1

Table 8-1

Model	TB20EJ Plus	TB22EJ Plus
X	318 mm (12.5 in)	196 mm (7.72in)
Y	1143 mm (45.0 in)	1110 mm (43.7 in)

6. Lift the machine as shown in the figure below.

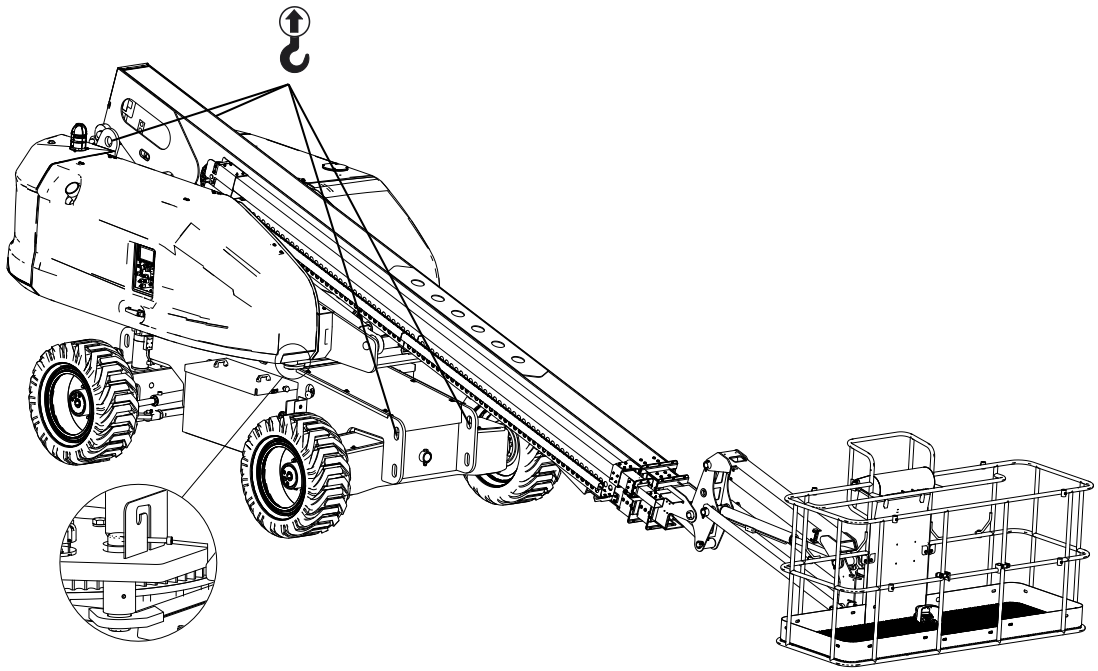

Figure 8-2

7. Only connect the rigging to the lifting point specified on the machine. Adjust the rigging to avoid damage to the machine and to keep the machine horizontal.

NOTICE
To protect the machine, choose the rigging with appropriate length.

TRANSPORTING THE MACHINE

Follow these requirements when transporting the machine by truck or trailer:

1. Before transport, turn the key switch on ground controller to OFF, and remove the key.
2. Perform a thorough inspection of the machine to prevent loose or untightened components and ensure the safety pin of turntable is locked.
3. Ensure the rope or belt is of sufficient capacity.
4. Use at least 4 ropes/belts to fasten the chassis and one rope/belt for the platform.
5. Adjust the rigging to prevent damage to the rope/belt.
6. To protect the boom components and platform load sensors, do not apply too large a downward force to the rope/belt fastened near the platform. It is recommended to add a foam layer beneath the platform and ensure the platform is suspended in the air.

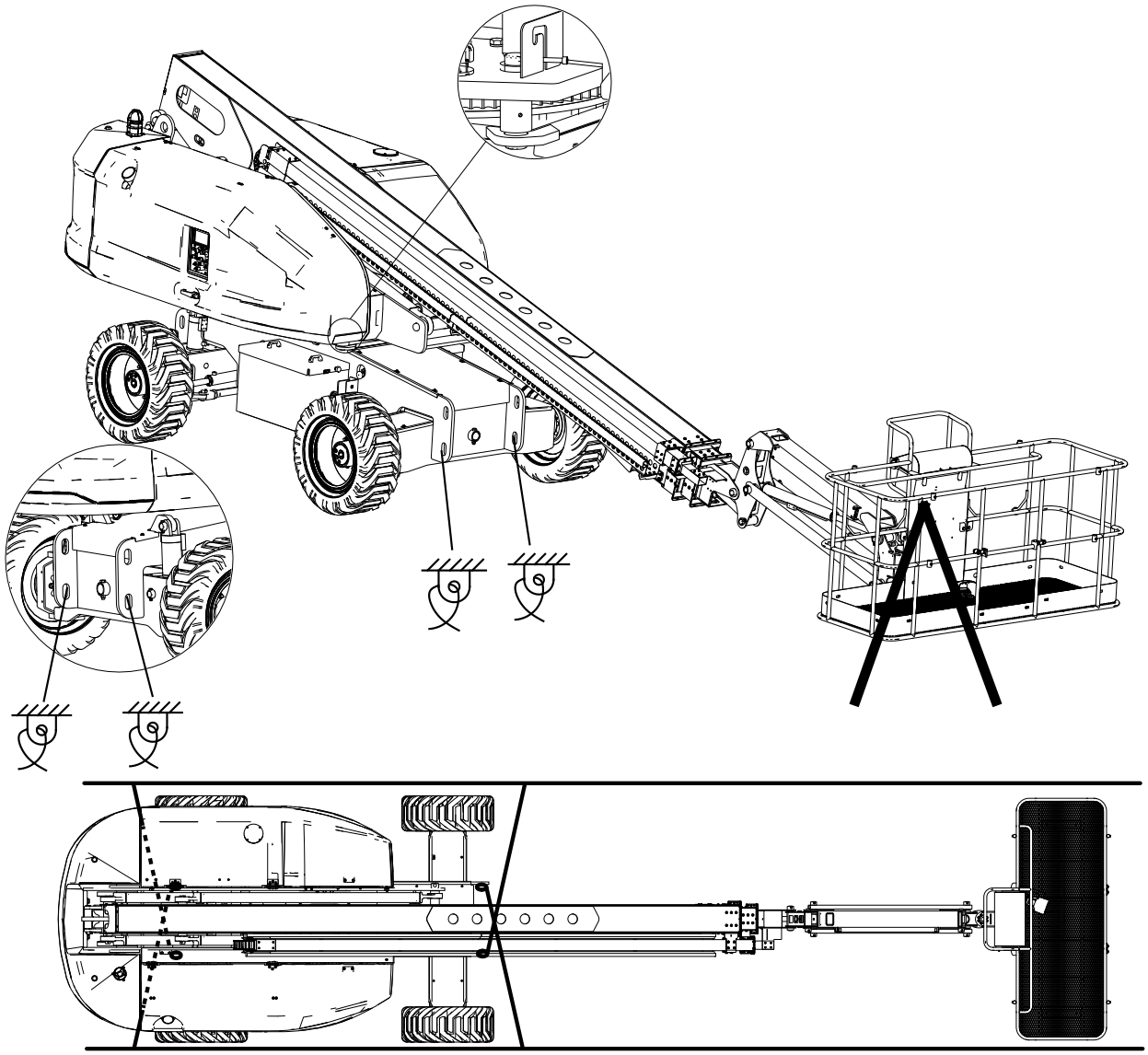

Figure 8-3

This Page Intentionally Left Blank

9 MAINTENANCE

This section provides detailed procedures for regular maintenance inspections. For further information about maintenance, please see the ***Maintenance Manual***.

⚠ WARNING

UNSAFE OPERATION HAZARD



Failure to follow proper maintenance procedures may result in death, serious injury or damage to the machine.

Follow these general rules:

- Preventive maintenance procedure should be established by the user according to the manufacturer's recommendations, machine operational environment and intensity of use, which should include both the regular inspection and the annual inspection.
- Only professionally trained, qualified personnel can conduct routine maintenance inspections on this machine.
- The maintenance personnel must know various potential hazards that may arise during the inspection and maintenance work, and select appropriate safety protective equipment according to the maintenance work and work place conditions, such as safety helmets, protective masks, protective gloves, goggles, protective clothing, safety belts and safety shoes.
- Before conducting any inspection and maintenance work, the maintenance personnel shall prepare appropriate maintenance tools as required by the work, such as wrench, screwdriver, pliers, multimeter, pressure gauge, lubrication device, jack and lifting equipment.
- Daily routine maintenance inspections must be performed during normal operation of the machine. Maintenance inspectors must carry out inspection and maintenance according to the repair & inspection report and must complete the repair & inspection report.
- Regular maintenance inspections must be performed at quarterly, biannual and annual intervals. Qualified, trained personnel must check and maintain the machine according to the repair & inspection report and must complete the repair & inspection report.
- Immediately remove a damaged or malfunctioning machine from service, mark and stop using it.
- Repair any damaged or malfunctioning machine before operating it.
- Keep all machine inspection records for at least 10 years or until the machine is no longer in use or as required by machine owner/company/custodian.
- The inspection and maintenance intervals depend on the manufacturer's recommendations, and should also be appropriate to the operational conditions and environment.
- Conduct a quarterly inspection on machines that have been out of service for more than three months.
- Without the manufacturer's approval, do not change any parts, especially those load-bearing and safety-relevant parts. The replacement parts used in the maintenance should be identical with or equivalent to the original parts.
- Any change that may affect the stability, strength or performance of the machine, must obtain the manufacturer's prior approval.
- After any major change or maintenance that may affect the stability, strength or performance of the entire machine or its parts, the machine must be inspected and verified.
- Unless otherwise specified, the maintenance procedures must be performed according the following terms and conditions:
  - Park the machine on flat, level and solid ground.
  - Place the machine in non-operating position.
  - Turn the key switch on ground controller to OFF position and remove the key to prevent unauthorized use of the machine.
  - Push in the red emergency stop buttons on ground and platform controllers to OFF position to avoid unintended start-up of the operating system.
  - Turn off the main power switch.
  - Disconnect all DC power from the machine.
  - Lock all wheels to prevent movement of the machine.
  - Before unscrewing or removing the hydraulic components, release the hydraulic oil pressure in the hydraulic circuit, particularly with the counterbalance valve on the cylinder.

CONDUCTING A PRE-DELIVERY INSPECTION

When the machine owner/company changes, in addition to conducting a pre-delivery inspection, the corresponding inspection shall be carried out according to the maintenance schedule requirement and repair & inspection report. When conducting a pre-delivery inspection, comply with the following requirements:

1. It is the responsibility of the machine owner/ company to perform a pre-delivery inspection.
2. Follow this procedure each time before delivery. Performing a pre-delivery inspection could reveal potential problems with the machine before you begin putting the machine into service.
3. Never use a damaged or malfunctioning machine. Tag the machine and do not use it.
4. Only professionally trained, qualified personnel may repair the machine and must follow the procedures as stated in *operation manual* and *maintenance manual*.
5. A competent operator must conduct daily maintenance on this machine as stated in *operation manual* and *maintenance manual*.

Before delivering the machine, complete the following record using these instructions:

1. Prepare the machine before delivery, which includes performing a pre-delivery inspection, following maintenance procedures and performing functional inspections.
2. Use the following table to note the results. After each section is complete, mark the appropriate box.
3. Record the inspection results. If any inspection results are "NO", the machine must be stopped and re-inspected after repair is completed and marked in the box marked "inspection".

Table 9-1

PREPARE THE WORK RECORD BEFORE DELIVERY			
Model			
Serial No.			
Inspection Item	**YES/Machine is in Good Condition**	**NO/Machine Has Damage or Malfunction**	**REPAIRED/Machine Has Been Repaired**
Pre-operational Inspection			
Maintenance Procedure			
Functional Inspection			
Machine Buyer/ Renter			
Inspector Signature			
Inspector Title			
Inspector Company			

FOLLOWING A MAINTENANCE SCHEDULE

Regular maintenance inspections must occur daily, quarterly, biannually (every 6 months) and annually,and must be performed by the personnel qualified in the maintenance and service of the machine models involved. Use the table to help you adhere to a routine maintenance schedule.

Table 9-2

INSPECTION INTERVAL	INSPECTION PROCEDURES
Every day or every 8 hours	A
Every quarter or every 250 hours	A+B
Every half a year or every 500 hours	A+B+C
Every year or every 1000 hours	A+B+C+D

COMPLETING A REPAIR & INSPECTION REPORT

1. The Repair & Inspection Report is divided into four parts (A, B, C and D) according to the time requirements of the maintenance schedule and the maintenance procedure requirements.
2. The Repair & Inspection Report shall include the inspection form of all regular inspections.
3. Duplicate the Repair & Inspection Report template for each inspection. Store the completed forms for 10 years or until the machine is no longer in use or as required by machine owner/company.
4. Use the following table to record the results. After one item is complete, mark the appropriate box.
5. If any inspection item is marked as "NO", the machine must be stopped and re-inspected after repair is completed and the box marked "-REPAIRED" shall be checked. Select the appropriate inspection procedure based on the inspection type.

Table 9-3

REPAIR & INSPECTION REPORT				
Model				
Serial No.				
Checklist A Procedures				
Items	**YES/Machine is in Good Condition**	**NO/Machine Has Damage or Malfunction**	**REPAIRED/ Machine Has Been Repaired**	**Problem Description**
A-1 Inspect All Manuals				
A-2 Inspect All Decals				
A-3 Inspect Damaged, Loose or Lost Parts				
A-4 Inspect Hydraulic Oil Level				
A-5 Inspect Hydraulic Oil Leakage				
A-6 Inspect Fuel Level				
A-7 Inspect Fuel Leakage				
A-8 Perform Oscillation Cylinder Exhausting				
A-9 Check Battery Level				
Checklist B Procedures				
Items	**YES/Machine is in Good Condition**	**NO/Machine Has Damage or Malfunction**	**REPAIRED/ Machine Has Been Repaired**	**Problem Description**
B-1 Inspect and Replace Hydraulic Oil Tank Return Filter Element				
B-2 Inspect Rim, Tire and Fasteners				
B-3 Inspect Hydraulic Oil				

REPAIR & INSPECTION REPORT				
B-4 Inspect Electrical Wiring				
B-5 Inspect Emergency Lowering				
B-6 Inspect Air Filter of Hydraulic Tank				
B-7 Replace High-pressure Filter Element				
B-8 Test Driving Speed				
B-9 Inspect Length and Angle Sensors				
B-10 Inspect Tilt Protection				
B-11 Inspect Drive Reducer Oil Level				
B-12 Inspect Slewing Reducer Oil Level				
B-13 Inspect Slewing Bearing Bolts				
B-14 Lubricate Slewing Bearing				
B-15 Inspect Platform Oscillation Cylinder Fasteners				
B-16 Test Cylinder Drift				
B-17 Inspect Counterbalance Valve Locking				
B-18 Test Oscillation Outriggers and Oscillation Multi-way Valve Lever				
B-19 Inspect Battery				
B-20 Test Braking Distance				
Checklist C Procedures				
Items	**YES/Machine is in Good Condition**	**NO/Machine Has Damage or Malfunction**	**REPAIRED/ Machine Has Been Repaired**	**Problem Description**
C-1 Inspect Boom Extending/ Retracting Wire Ropes and Pulleys				
C-2 Replace Hydraulic Tank Air Filter				
C-3 Inspect Weighing System				

REPAIR & INSPECTION REPORT				
Checklist D Procedures				
Items	**YES/Machine is in Good Condition**	**NO/Machine Has Damage or Malfunction**	**REPAIRED/ Machine Has Been Repaired**	**Problem Description**
D-1 Replace Drive Reducer Gear Oil				
D-2 Replace Slewing Reducer Gear Oil				
D-3 Replace Hydraulic Oil				
D-4 Replace Hydraulic Tank Suction Filter				
D-5 Inspect Boom Wear Pads				

User	
Inspector Signature	
Inspection Date	
Inspector Title	
Inspector Company	

MAJOR MODIFICATION AND REPAIR RECORD

1. A major modification/repair is a modification/repair made to all or part of a machine that affects the stability, strength or performance of the machine.
2. Each time the machine owner/company makes a major modification/repair to the machine, it should be documented using the form below. Keep the form properly until the machine is taken out of service, or as requested by the machine owner/ company.
3. Major modifications/repairs to the machine must be performed by a qualified service technician.
4. The machine must be inspected and verified after major modifications/repairs, with the inspection items including but not limited to all items in the maintenance and inspection report.
5. If the inspection result of each item in the Maintenance and Inspection Report is “YES”, the “Machine Status after Modification/Repair” in the form will be “Good” and the machine can be used. If either inspection result is “NO”, the machine must be re-inspected after the repair is completed until the machine is in “Good” condition before continuing to use the machine.

Table 9-4

Major Modification and Repair Record					
Model					
Serial No.					
Date	**Problem Description**	**Modification/Repair Item**	**Machine Status af- ter Change**	**Repairman’s Company and Position**	**Repair- man Signature**

10 DECALS/NAMEPLATES INSPECTION

Use appropriate inspection methods to check that all decals are easy to identify and properly placed.

Replace any lost or damaged safety decals.

Clean safety decals with neutral soap and water. Do not use solvent-based cleaners, which can damage safety label materials.

Do not operate machines without decals/nameplates.

⚠ WARNING

UNSAFE OPERATION HAZARD



All safety labels must be legible to alert personnel of safety hazards. Replace any illegible or missing labels immediately. Safety labels removed during any repair work must be replaced in their original positions before the engine is placed back into service. Do not operate the engine if there are missing or badly worn safety labels.

DECALS/NAMEPLATE (GB)

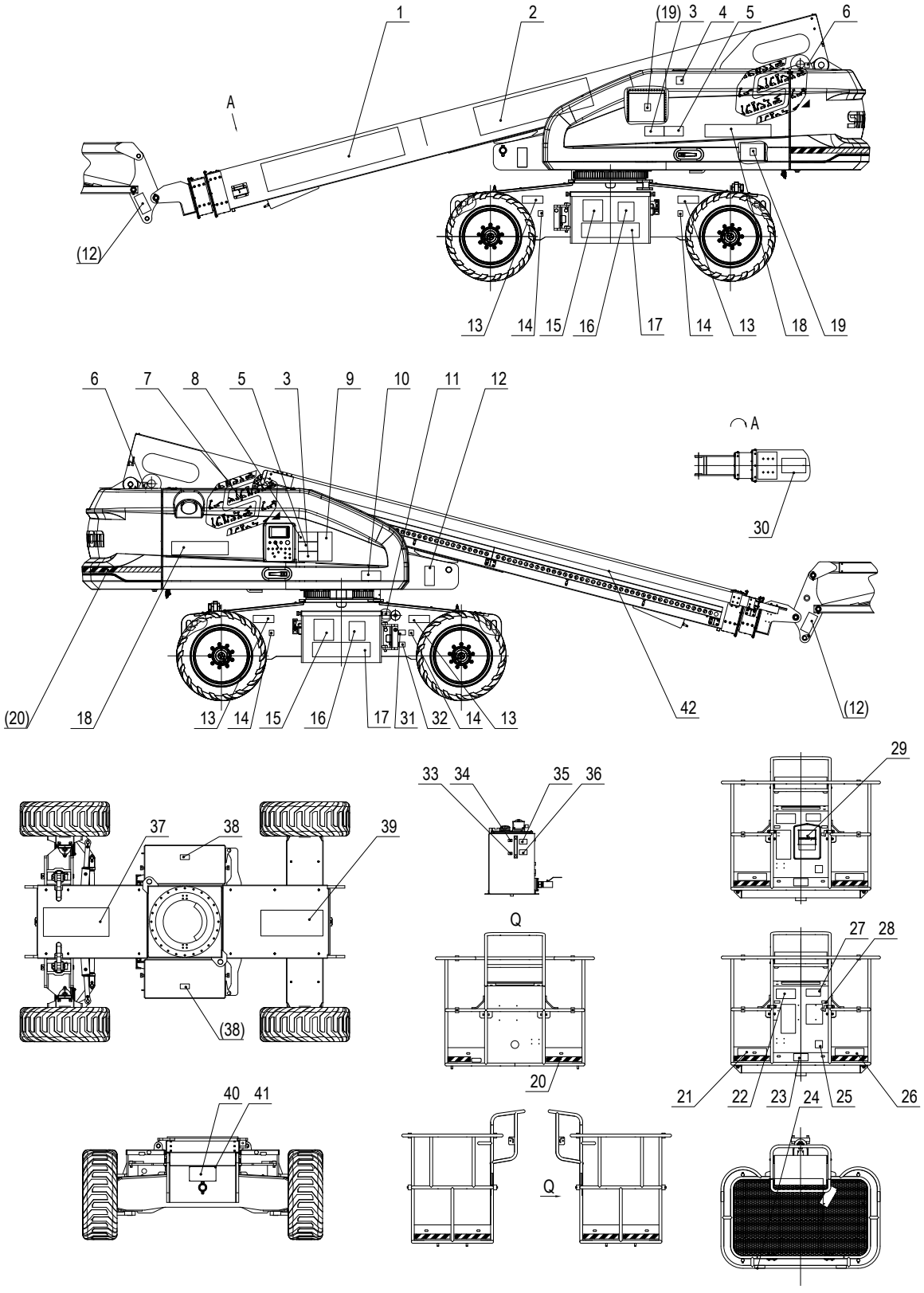

No.	Part No.	Description	Qty.	Remarks
	114006103005	Decals (GB)-TB22EJ Plus	1	
	114002103002	Decals (GB)-TB20EJ Plus	1	
1	105057103001	LOGO-SINOBOOM (large)	1	
2	114002103001	Decal-TB20EJ Plus (large)	1	
	114006103002	Decal-TB22EJ Plus (large)	1	
3	104011100006	Decal-Bulkhead overhaul	2	
4	101016100034	Decal-Noise of 72dB	1	
5	104011100007	Decal-Tipping hazard	2	
6	104011100002	Decal-Lifting points	6	
7	105045103002	LOGO-Symbol (large sticker)	2	
8	104011100013	Decal-Electrocution hazard	1	
9	104011100020	Decal-General safety instructions	2	
10	104011100022	Decal-Turntable rotation lock	1	
11	104011100016	Decal-Emergency stop switch	1	
12	104011100011	Decal-Crush hazard	4	
13	104011100001	Decal-Tipping hazard	4	
14	105050103009	Decal-Wheel load of 6740kg	4	
15	114006103011	Decal-Lead-acid battery	2	
16	114006103012	Decal-QR code	2	
17	103003100004	Decal-Contact information	2	
18	114002103000	Decal-TB20EJ Plus (small)	2	
	114006103001	Decal-TB22EJ Plus (small)	2	
19	114004103012	Decal-Do not flushing with water	2	
20	216060000002	Yellow & black hazard warning stripe tape	5	
21	103007103002	Decal-Tipping hazard	1	
22	105021100003	Decal-Tipping hazard	1	
23	104011100019	Decal-Crush hazard	1	
24	104011100021	Decal-Crush hazard	4	
25	104011100017	Decal-Foot switch	1	
26	105046103004	Decal-Rated load of 454kg	1	
27	104011100009	Decal-Read manuals	1	
28	101048100014	Decal-Lashing point	2	
29	114002103007	Decal-Range of motion	1	TB20EJ Plus
	114006103000	Decal-Range of motion	1	TB22EJ Plus
30	104011100012	Decal-Fall hazard	1	

No.	Part No.	Description	Qty.	Remarks
31	101023100012	Decal-Charge voltage	1	
32	101012100010	Decal-Electrocution hazard	1	
33	104011100003	Decal-Hydraulic oil level	1	
34	104011100010	Decal-Hydraulic oil level	1	
35	104010100021	Decal-Hydraulic oil temperature range	1	
36	104009100018	Decal-Hydraulic oil marking	1	
37	105001100053	Decal-Direction marking	1	
38	101012100001	Decal-No smoking or fires	2	
39	105001100051	Decal-Direction marking	1	
40	105001100057	Nameplate-GB	1	
41	215050000001	Blind rivet 3×8-ZnD	4	

DECALS/NAMEPLATE (CE-METRIC)

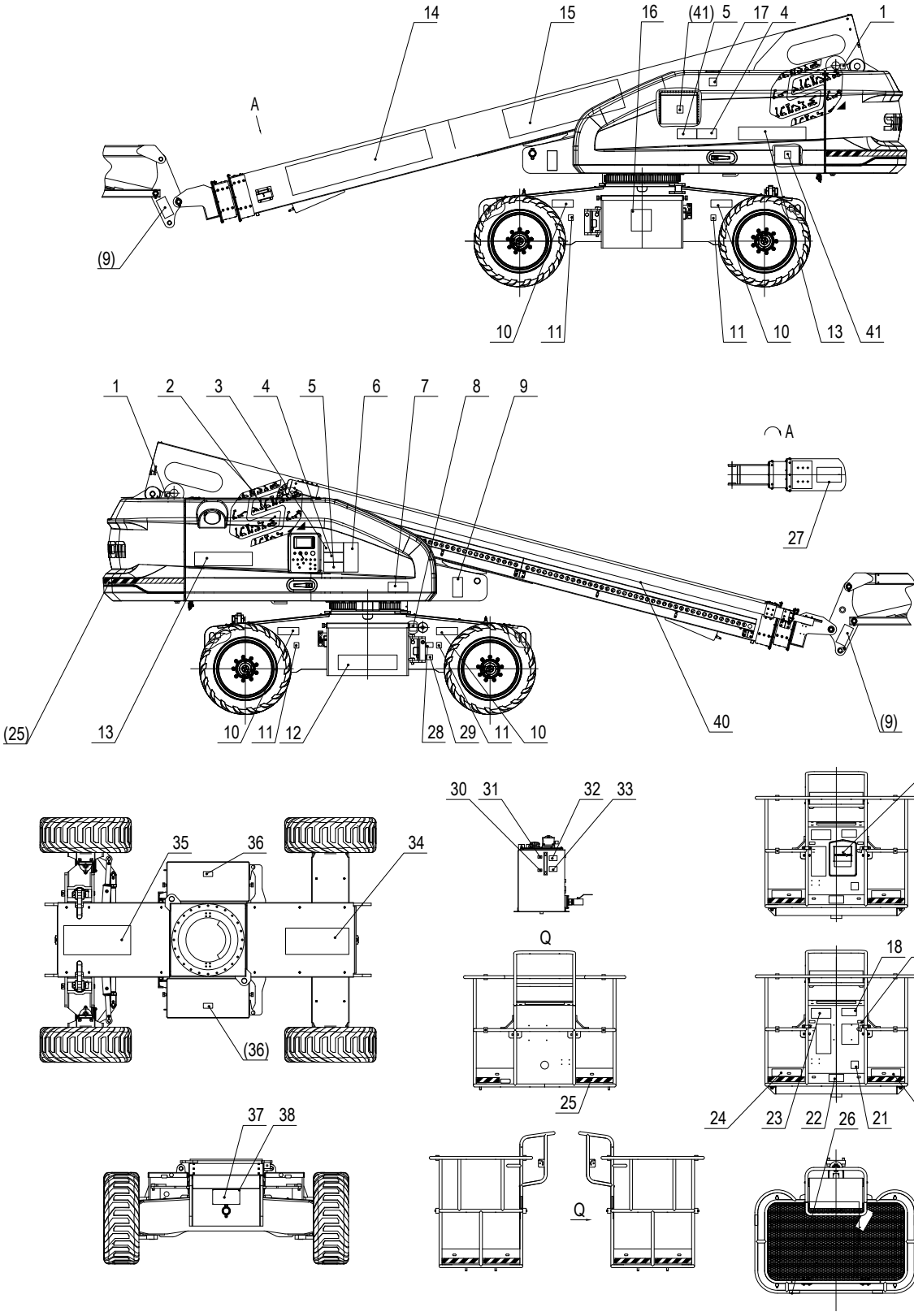

No.	Part No.	Description	Qty.	Remarks
	114006103007	Decals (CE-Metric)-TB22EJ Plus	1	
	114002103005	Decals (CE-Metric)-TB20EJ Plus	1	
1	104011100002	Decal-Lifting points	6	
2	105045103002	LOGO-Symbol (large sticker)	2	
3	104011100013	Decal-Electrocution hazard	1	
4	104011100007	Decal-Tipping hazard	2	
5	104011100006	Decal-Bulkhead overhaul	2	
6	104011100020	Decal-General safety instructions	2	
7	104011100022	Decal-Turntable rotation lock	1	
8	104011100016	Decal-Emergency stop switch	1	
9	104011100011	Decal-Crush hazard	4	
10	104011100001	Decal-Tipping hazard	4	
11	105050103009	Decal-Wheel load of 6740kg	4	
12	105001100050	Decal-Contact information	1	
13	114002103000	Decal-TB20EJ Plus (small)	2	
	114006103001	Decal-TB22EJ Plus (small)	2	
14	105057103001	LOGO-SINOBOOM (large)	1	
15	114002103001	Decal-TB20EJ Plus (large)	1	
	114006103002	Decal-TB22EJ Plus (large)	1	
16	103003100014	Decal-Recyclable logo	1	
17	101016100034	Decal-Noise of 72dB	1	
18	104011100009	Decal-Read manuals	1	
19	101016100030	Decal-Lashing point	2	
20	105046103004	Decal-Rated load of 454kg	1	
21	104011100017	Decal-Foot switch	1	
22	104011100019	Decal-Crush hazard	1	
23	105021100003	Decal-Tipping hazard	1	
24	103007103002	Decal-Tipping hazard	1	
25	216060000002	Yellow & black hazard warning stripe tape	5	
26	104011100021	Decal-Crush hazard	4	
27	104011100012	Decal-Fall hazard	1	
28	101012100014	Decal-Charge voltage	1	
29	101012100010	Decal-Electrocution hazard	1	
30	104011100003	Decal-Hydraulic oil level	1	
31	104011100010	Decal-Hydraulic oil level	1	

No.	Part No.	Description	Qty.	Remarks
32	104010100021	Decal-Hydraulic oil temperature range	1	
33	104009100022	Decal-Hydraulic oil marking	1	
34	105001100051	Decal-Direction marking	1	
35	105001100053	Decal-Direction marking	1	
36	101012100001	Decal-No smoking or fires	2	
37	103011103012	Nameplate-UKCA&CE (TB)	1	
38	215050000001	Blind rivet 3×8-ZnD	4	
39	114002103007	Decal-Range of motion	1	TB20EJ Plus
	114006103000	Decal-Range of motion	1	TB22EJ Plus
41	114004103013	Decal-Do not flushing with water	2	

DECALS/NAMEPLATE (CE-IMPERIAL)

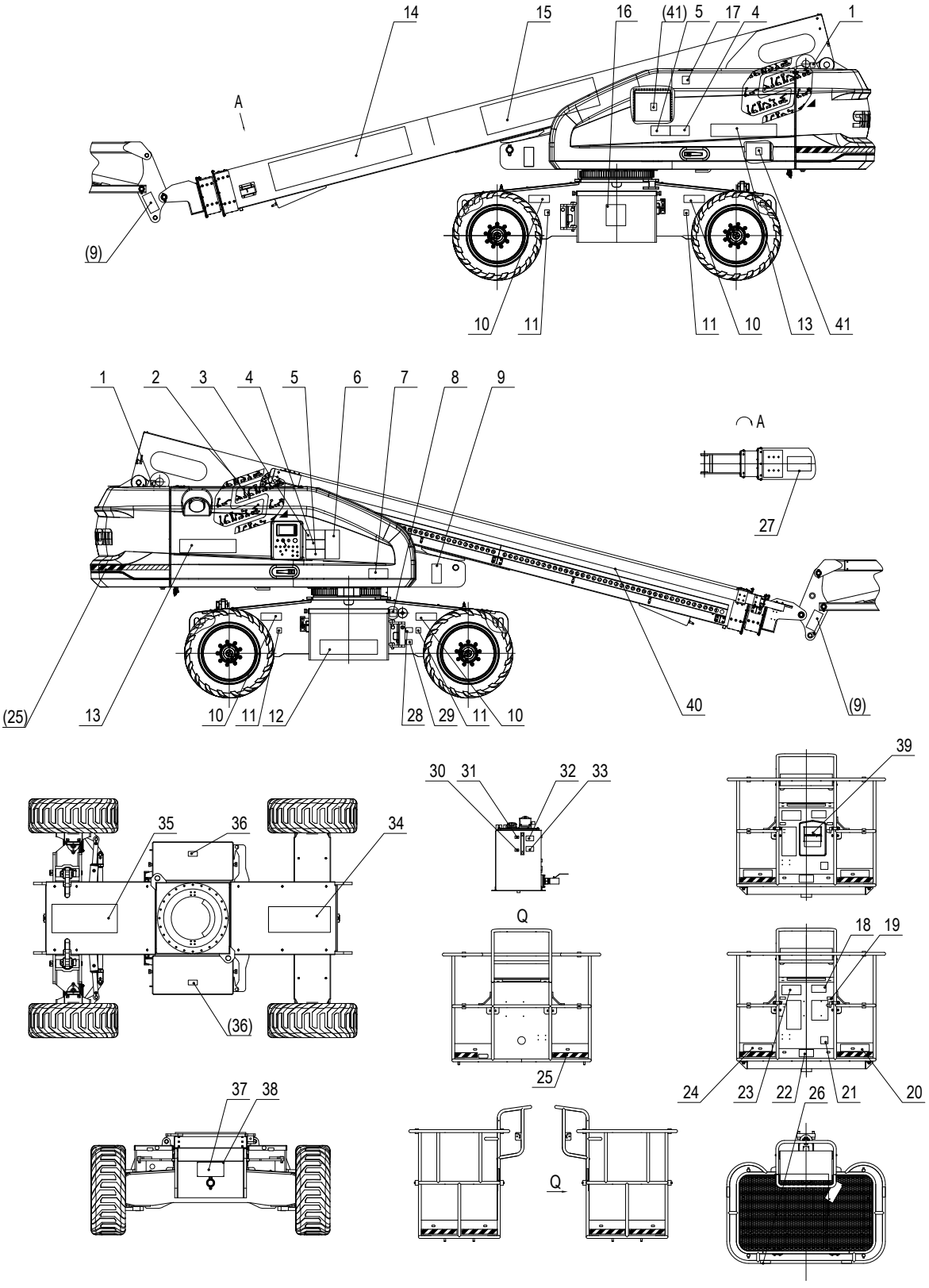

No.	Part No.	Description	Qty.	Remarks
	114006103008	Decals (CE-Imperial)-TB22EJ Plus	1	
	114002103008	Decals (CE-Imperial)-TB20EJ Plus	1	
1	104011100002	Decal-Lifting points	6	
2	105045103002	LOGO-Symbol (large sticker)	2	
3	104011100013	Decal-Electrocution hazard	1	
4	104011100007	Decal-Tipping hazard	2	
5	104011100006	Decal-Bulkhead overhaul	2	
6	104011100020	Decal-General safety instructions	2	
7	104011100022	Decal-Turntable rotation lock	1	
8	104011100016	Decal-Emergency stop switch	1	
9	104011100011	Decal-Crush hazard	4	
10	104011100001	Decal-Tipping hazard	4	
11	105050103009	Decal-Wheel load of 6740kg	4	
12	105001100050	Decal-Contact information	1	
13	114002103009	Decal-TB660EJ Plus (small)	2	
	114006103003	Decal-TB740EJ Plus (small)	2	
14	105057103001	LOGO-SINOBOOM (large)	1	
15	114002103010	Decal-TB660EJ Plus (large)	1	
	114006103004	Decal-TB740EJ Plus (large)	1	
16	103003100014	Decal-Recyclable logo	1	
17	101016100034	Decal-Noise of 72dB	1	
18	104011100009	Decal-Read manuals	1	
19	101016100030	Decal-Lashing point	2	
20	105046103004	Decal-Rated load of 454kg	1	
21	104011100017	Decal-Foot switch	1	
22	104011100019	Decal-Crush hazard	1	
23	105021100003	Decal-Tipping hazard	1	
24	103007103002	Decal-Tipping hazard	1	
25	216060000002	Yellow & black hazard warning stripe tape	5	
26	104011100021	Decal-Crush hazard	4	
27	104011100012	Decal-Fall hazard	1	
28	101012100014	Decal-Charge voltage	1	
29	101012100010	Decal-Electrocution hazard	1	
30	104011100003	Decal-Hydraulic oil level	1	
31	104011100010	Decal-Hydraulic oil level	1	

No.	Part No.	Description	Qty.	Remarks
32	104010100021	Decal-Hydraulic oil temperature range	1	
33	104009100022	Decal-Hydraulic oil marking	1	
34	105001100051	Decal-Direction marking	1	
35	105001100053	Decal-Direction marking	1	
36	101012100001	Decal-No smoking or fires	2	
37	103011103012	Nameplate-UKCA&CE (TB)	1	
38	215050000001	Blind rivet 3×8-ZnD	4	
39	114002103007	Decal-Range of motion	1	TB20EJ Plus
	114006103000	Decal-Range of motion	1	TB22EJ Plus
41	114004103013	Decal-Do not flushing with water	2	

DECALS/NAMEPLATE (CSA)

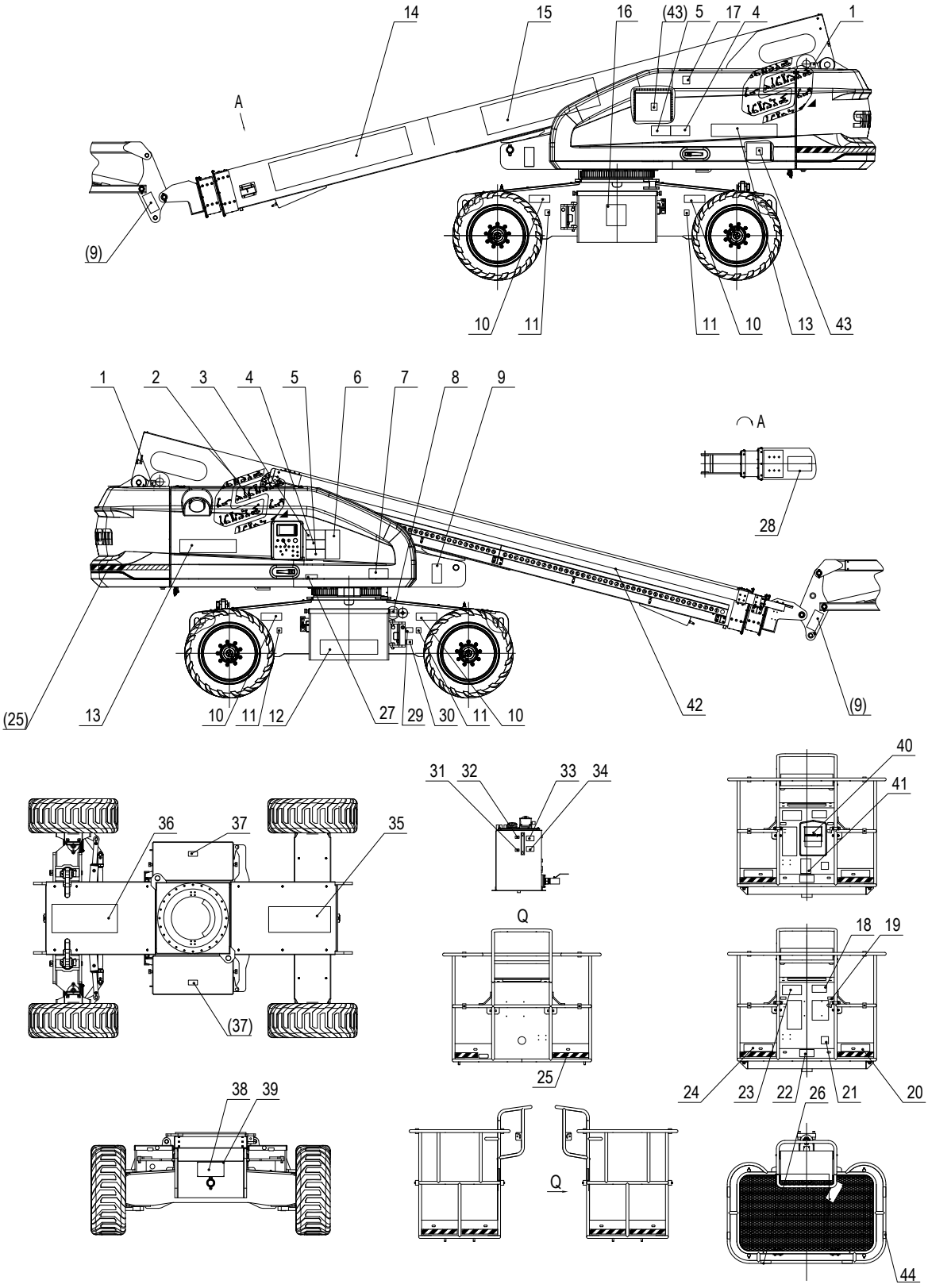

No.	Part No.	Description	Qty.	Remarks
	114006103006	Decals (CSA)-TB22EJ Plus	1	
	114002103012	Decals (CSA)-TB20EJ Plus	1	
1	104011100002	Decal-Lifting points	6	
2	105045103002	LOGO-Symbol (large sticker)	2	
3	104011100013	Decal-Electrocution hazard	1	
4	104011100007	Decal-Tipping hazard	2	
5	104011100006	Decal-Bulkhead overhaul	2	
6	104011100020	Decal-General safety instructions	2	
7	104011100022	Decal-Turntable rotation lock	1	
8	104011100016	Decal-Emergency stop switch	1	
9	104011100011	Decal-Crush hazard	4	
10	104011100001	Decal-Tipping hazard	4	
11	113002103008	Decal-Wheel load of 6740kg	4	
12	105001100050	Decal-Contact information	1	
13	114002103009	Decal-TB660EJ Plus (small)	2	
	114006103003	Decal-TB740EJ Plus (small)	2	
14	105057103001	LOGO-SINOBOOM (large)	1	
15	114002103010	Decal-TB660EJ Plus (large)	1	
	114006103004	Decal-TB740EJ Plus (large)	1	
16	103003100014	Decal-Recyclable logo	1	
17	101016100034	Decal-Noise of 72dB	1	
18	104011100009	Decal-Read manuals	1	
19	101016100030	Decal-Lashing point	2	
20	105046103004	Decal-Rated load of 454kg	1	
21	104011100017	Decal-Foot switch	1	
22	104011100019	Decal-Crush hazard	1	
23	105021100003	Decal-Tipping hazard	1	
24	103007103002	Decal-Tipping hazard	1	
25	216060000002	Yellow & black hazard warning stripe tape	5	
26	104011100021	Decal-Crush hazard	4	
27	101040103015	Decal-Annual inspection date	1	
28	104011100012	Decal-Fall hazard	1	
29	101012100014	Decal-Charge voltage	1	
30	101012100010	Decal-Electrocution hazard	1	
31	104011100003	Decal-Hydraulic oil level	1	

No.	Part No.	Description	Qty.	Remarks
32	104011100010	Decal-Hydraulic oil level	1	
33	104010100021	Decal-Hydraulic oil temperature range	1	
34	104009100022	Decal-Hydraulic oil marking	1	
35	105001100051	Decal-Direction marking	1	
36	105001100053	Decal-Direction marking	1	
37	101012100001	Decal-No smoking or fires	2	
38	103004103004	Nameplate-ANSI&CSA (TB)	1	
39	215050000001	Blind rivet 3×8-ZnD	4	
40	114002103007	Decal-Range of motion	1	TB20EJ Plus
	114006103000	Decal-Range of motion	1	TB22EJ Plus
41	105029103023	Decal-Operation instructions	1	
43	114004103013	Decal-Do not flushing with water	2	
44	103010103014	Decal-Non-insulated	3	

DECALS/NAMEPLATE (ANSI)

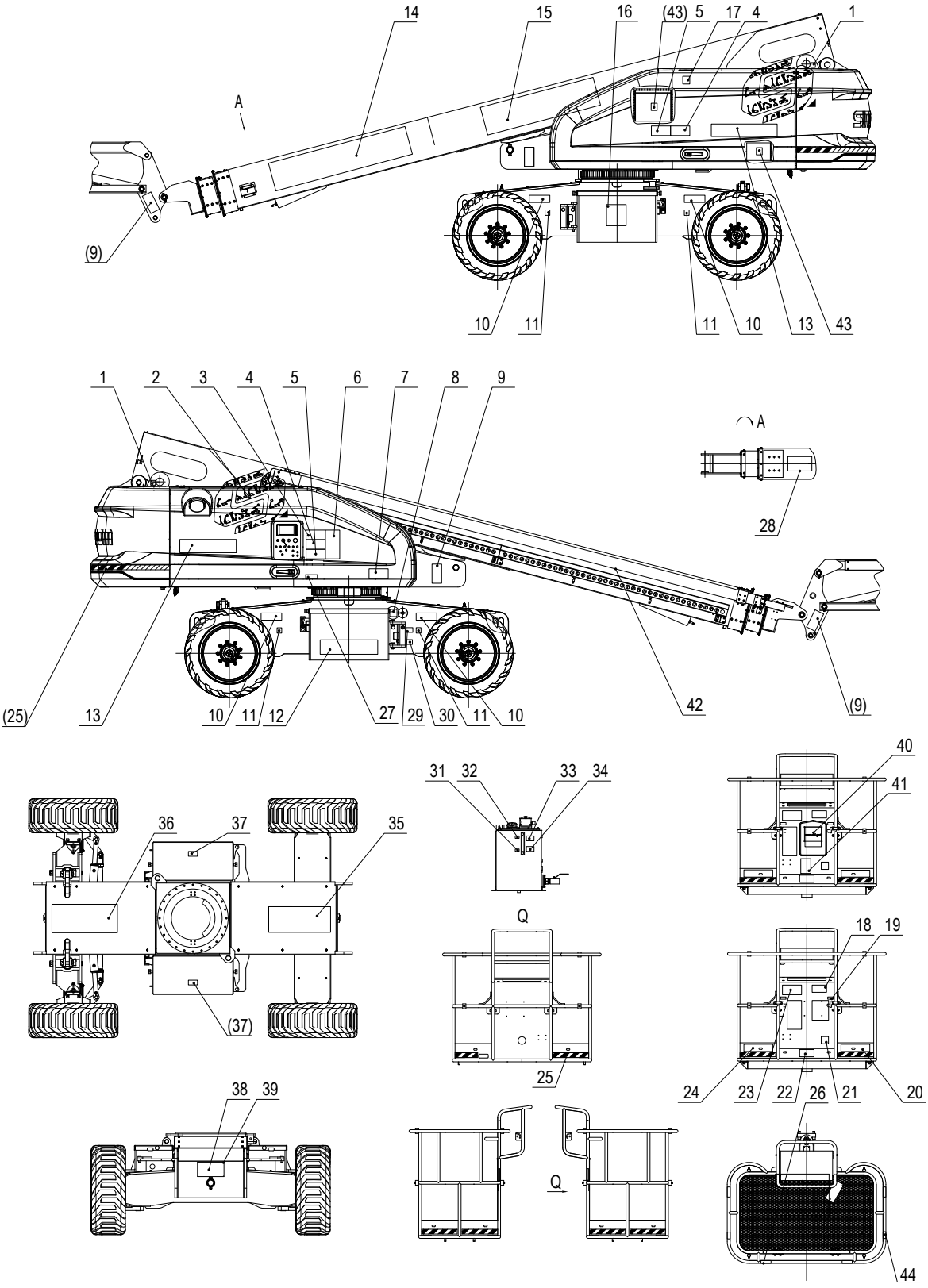

No.	Part No.	Description	Qty.	Remarks
	114002103011	Decals (ANSI)-TB20EJ Plus	1	
	114006103009	Decals (ANSI)-TB22EJ Plus		
1	104011100002	Decal-Lifting points	6	
2	105045103002	LOGO-Symbol (large sticker)	2	
3	104011100013	Decal-Electrocution hazard	1	
4	104011100007	Decal-Tipping hazard	2	
5	104011100006	Decal-Bulkhead overhaul	2	
6	104011100020	Decal-General safety instructions	2	
7	104011100022	Decal-Turntable rotation lock	1	
8	104011100016	Decal-Emergency stop switch	1	
9	104011100011	Decal-Crush hazard	4	
10	104011100001	Decal-Tipping hazard	4	
11	113002103008	Decal-Wheel load of 6740kg	4	
12	105001100050	Decal-Contact information	1	
13	114002103009	Decal-TB660EJ Plus (small)	2	
	114006103003	Decal-TB740EJ Plus (small)	2	
14	105057103001	LOGO-SINOBOOM (large)	1	
15	114002103010	Decal-TB660EJ Plus (large)	1	
	114006103004	Decal-TB740EJ Plus (large)	1	
16	103003100014	Decal-Recyclable logo	1	
17	101016100034	Decal-Noise of 72dB	1	
18	104011100009	Decal-Read manuals	1	
19	101016100030	Decal-Lashing point	2	
20	105046103004	Decal-Rated load of 454kg	1	
21	104011100017	Decal-Foot switch	1	
22	104011100019	Decal-Crush hazard	1	
23	105021100003	Decal-Tipping hazard	1	
24	103007103002	Decal-Tipping hazard	1	
25	216060000002	Yellow & black hazard warning stripe tape	5	
26	104011100021	Decal-Crush hazard	4	
27	101040103015	Decal-Annual inspection date	1	
28	104011100012	Decal-Fall hazard	1	
29	101012100014	Decal-Charge voltage	1	
30	101012100010	Decal-Electrocution hazard	1	
31	104011100003	Decal-Hydraulic oil level	1	

No.	Part No.	Description	Qty.	Remarks
32	104011100010	Decal-Hydraulic oil level	1	
33	104010100021	Decal-Hydraulic oil temperature range	1	
34	104009100022	Decal-Hydraulic oil marking	1	
35	105001100051	Decal-Direction marking	1	
36	105001100053	Decal-Direction marking	1	
37	101012100001	Decal-No smoking or fires	2	
38	103004103004	Nameplate-ANSI&CSA (TB)	1	
39	215050000001	Blind rivet 3×8-ZnD	4	
40	114002103007	Decal-Range of motion	1	TB20EJ Plus
	114006103000	Decal-Range of motion	1	TB22EJ Plus
41	105029103023	Decal-Operation instructions	1	
43	114004103013	Decal-Do not flushing with water	2	
44	103010103014	Decal-Non-insulated	3	

DECALS/NAMEPLATE-GB (LITHIUM BATTERY)

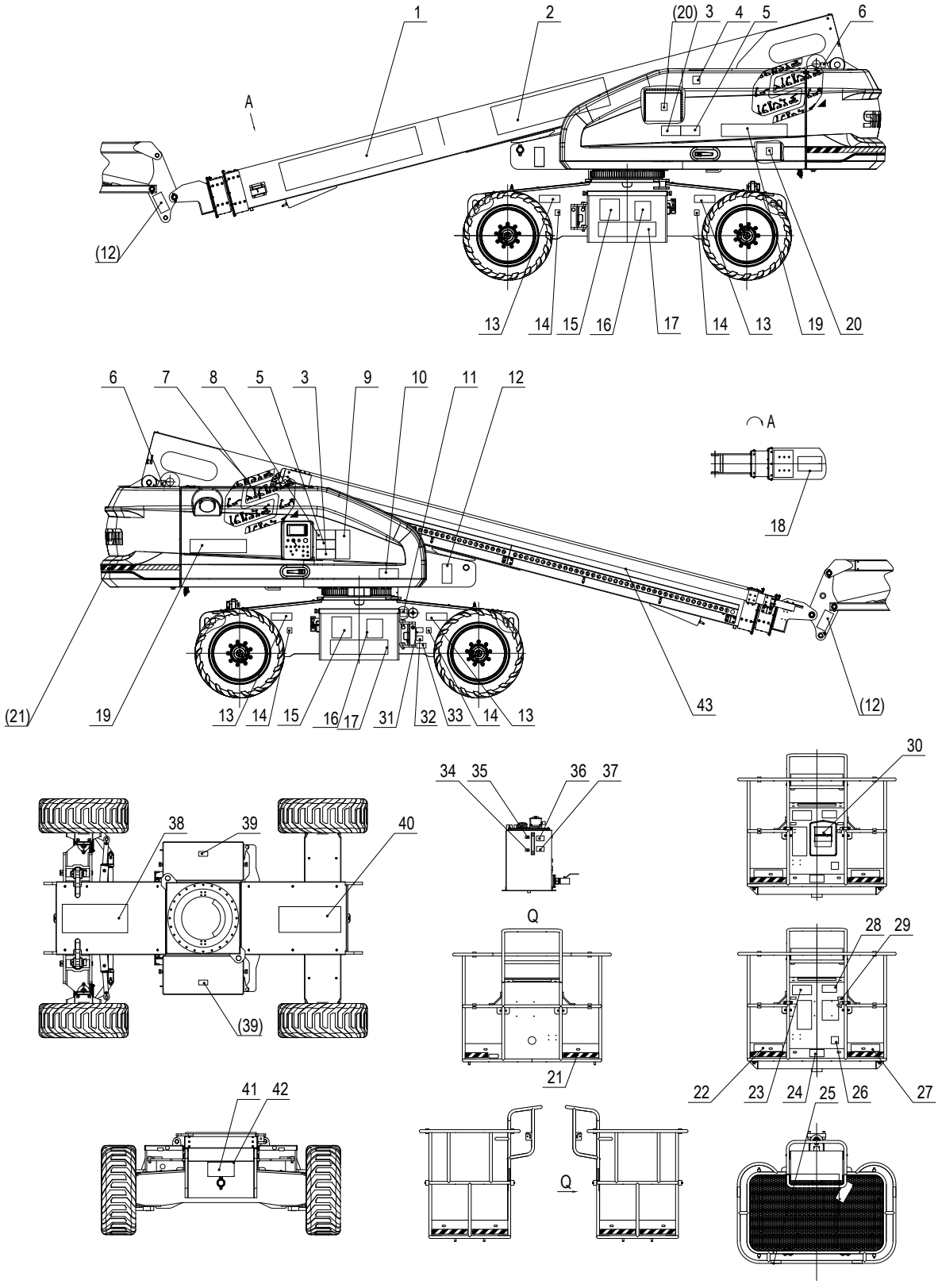

No.	Part No.	Description	Qty.	Remarks
	114006103013	Decals (GB, lithium battery)-TB22EJ Plus	1	
	114002103017	Decals (GB, lithium battery)-TB20EJ Plus	1	
1	105057103001	LOGO-SINOBOOM (large)	1	
2	114002103001	Decal-TB20EJ Plus (large)	1	
	114006103002	Decal-TB22EJ Plus (large)	1	
3	104011100006	Decal-Bulkhead overhaul	2	
4	101016100034	Decal-Noise of 72dB	1	
5	104011100007	Decal-Tipping hazard	2	
6	104011100002	Decal-Lifting points	6	
7	105045103002	LOGO-Symbol (large sticker)	2	
8	104011100013	Decal-Electrocution hazard	1	
9	104011100020	Decal-General safety instructions	2	
10	104011100022	Decal-Turntable rotation lock	1	
11	104011100016	Decal-Emergency stop switch	1	
12	104011100011	Decal-Crush hazard	4	
13	104011100001	Decal-Tipping hazard	4	
14	105050103009	Decal-Wheel load of 6740kg	4	
15	101048103033	Decal-Lithium battery	2	
16	114006103012	Decal-QR code	2	
17	103003100004	Decal-Contact information	2	
18	104011100012	Decal-Fall hazard	1	
19	114002103000	Decal-TB20EJ Plus (small)	2	
	114006103001	Decal-TB22EJ Plus (small)	2	
20	114004103012	Decal-Do not flushing with water	2	
21	216060000002	Yellow & black hazard warning stripe tape	5	
22	103007103002	Decal-Tipping hazard	1	
23	105021100003	Decal-Tipping hazard	1	
24	104011100019	Decal-Crush hazard	1	
25	104011100021	Decal-Crush hazard	4	
26	104011100017	Decal-Foot switch	1	
27	105046103004	Decal-Rated load of 454kg	1	
28	104011100009	Decal-Read manuals	1	
29	101048100014	Decal-Lashing point	2	
30	114002103007	Decal-Range of motion	1	TB20EJ Plus
	114006103000	Decal-Range of motion	1	TB22EJ Plus

No.	Part No.	Description	Qty.	Remarks
31	114002103014	Decal-Power switching	1	
32	101012100010	Decal-Electrocution hazard	1	
33	114002103016	Decal-Charger plug	1	
34	104011100003	Decal-Hydraulic oil level	1	
35	104011100010	Decal-Hydraulic oil level	1	
36	104010100021	Decal-Hydraulic oil temperature range	1	
37	104009100018	Decal-Hydraulic oil marking	1	
38	105001100053	Decal-Direction marking	1	
39	101012100001	Decal-No smoking or fires	2	
40	105001100051	Decal-Direction marking	1	
41	105001100057	Nameplate-GB	1	
42	215050000001	Blind rivet 3×8-ZnD	4	

This Page Intentionally Left Blank

APPENDIX 1: SYMBOLS AND DESCRIPTION

SYMBOLS CHART

 Read maintenance manual	 Anchor point allows only 1 person to tie	 Wind speed	 Chemical burns hazards	 Wedge the wheel
 Read operation manual	 Add lubricant	 Crushing hazard-Please wear work shoes	 Danger of hot, high pressure fluids	 Wind
 Noise level	 Burns hazards	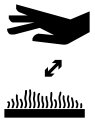 Keep a safe distance from high temperatures	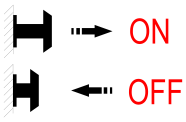 Pull out-open Press-close	 Alarm sounds
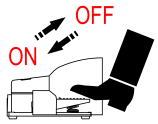 Step-open Release-close	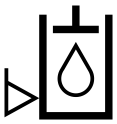 Hydraulic oil level - low level	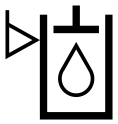 Hydraulic oil level - high level	 Temperature	 Replace with tires of the same specification
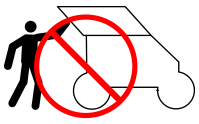 Only trained maintenance personnel can access the bulkhead	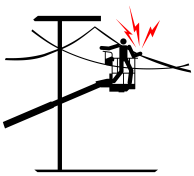 Electrocution hazards on platform	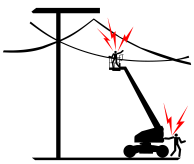 Electrocution hazards on the ground and platform	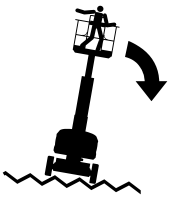 Tip-over hazards-Avoid uneven ground	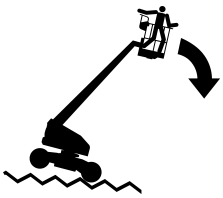 Tip-over hazards-Avoid uneven ground
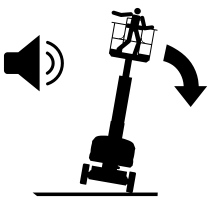 Tip-over hazards-Never use machine in strong, gusty wind	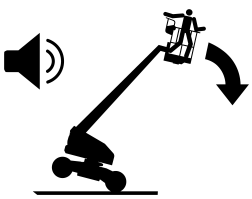 Tip-over hazards-Never use machine in strong, gusty wind	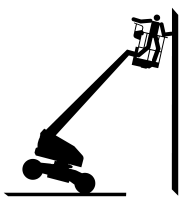 Tip-over hazards-Never push or pull objects outside platform	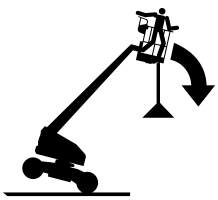 Tip-over hazards-Never suspend objects from platform	 Tip-over hazards-Never place ladders and scaffolding on the platform

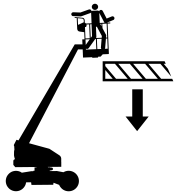 Collision hazards-Never lower platform without checking for nearby obstacles	 Collision hazards-Never raise platform without checking for overhead obstacles	 Crushing hazards-Keep hands away form nearby obstacles when raising platform	 Fall hazards-Never climb on guardrails of platform	 Fall hazards-Never climb on boom
 Keep away from platform in rotation	 Battery explosion hazard	 No smoking	 No smoking	 Wear protective clothing and glasses
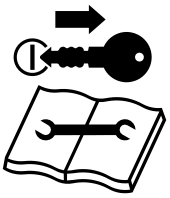 Only professional maintenance personnel can perform the maintenance	 Side force	 Electrocution hazards	 Fast/high speed	 Slow/low speed
 Horn	 Lifting point	 Lashing points	 Tire to ground load	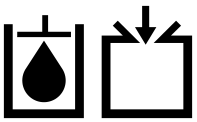 Hydraulic oil filler
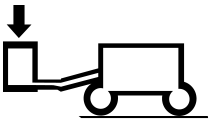 Platform carrying capacity	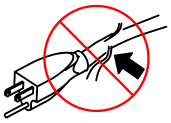 Do not use damaged cords	 Tool or weight		

APPENDIX 2: PREPARE THE WORK RECORD BEFORE DELIVERY

PREPARE THE WORK RECORD BEFORE DELIVERY			
Model			
Serial No.			
Inspection Item	**YES/Machine is in Good Condition**	**NO/Machine Has Damage or Malfunction**	**REPAIRED/Machine Has Been Repaired**
Pre-operational Inspection			
Maintenance Procedure			
Functional Inspection			
Machine Buyer/ Renter			
Inspector Signature			
Inspector Title			
Inspector Company			

NOTE:

1. Prepare the machine before delivery, which includes performing a pre-delivery inspection, following maintenance procedures and performing functional inspections.
2. Use the table to record the results. After each section is complete, mark the appropriate box.
3. Record the inspection results. If any inspection result is “NO”, the machine must be stopped, and then re-inspected after repair is completed, and the box marked “REPAIRED” shall be checked.

This Page Intentionally Left Blank

APPENDIX 3: REPAIR & INSPECTION REPORT

REPAIR & INSPECTION REPORT					
Model					
Serial No.					
Checklist A Procedures					
Items	**YES/Machine is in Good Condition**	**NO/Machine Has Damage or Malfunction**	**REPAIRED/ Machine Has Been Repaired**	**Problem Description**	
A-1 Inspect All Manuals					
A-2 Inspect All Decals					
A-3 Inspect Damaged, Loose or Lost Parts					
A-4 Inspect Hydraulic Oil Level					
A-5 Inspect Hydraulic Oil Leakage					
A-6 Inspect Fuel Level					
A-7 Inspect Fuel Leakage					
A-8 Perform Oscillation Cylinder Exhausting					
A-9 Check Battery Level					
Checklist B Procedures					
Items	**YES/Machine is in Good Condition**	**NO/Machine Has Damage or Malfunction**	**REPAIRED/ Machine Has Been Repaired**	**Problem Description**	
B-1 Inspect and Replace Hydraulic Oil Tank Return Filter Element					
B-2 Inspect Rim, Tire and Fasteners					
B-3 Inspect Hydraulic Oil					
B-4 Inspect Electrical Wiring					
B-5 Inspect Emergency Lowering					
B-6 Inspect Air Filter of Hydraulic Tank					

REPAIR & INSPECTION REPORT				
B-7 Replace High-pressure Filter Element				
B-8 Test Driving Speed				
B-9 Inspect Length and Angle Sensors				
B-10 Inspect Tilt Protection				
B-11 Inspect Drive Reducer Oil Level				
B-12 Inspect Slewing Reducer Oil Level				
B-13 Inspect Slewing Bearing Bolts				
B-14 Lubricate Slewing Bearing				
B-15 Inspect Platform Oscillation Cylinder Fasteners				
B-16 Test Cylinder Drift				
B-17 Inspect Counterbalance Valve Locking				
B-18 Test Oscillation Outriggers and Oscillation Multi-way Valve Lever				
B-19 Inspect Battery				
B-20 Test Braking Distance				
Checklist C Procedures				
Items	**YES/Machine is in Good Condition**	**NO/Machine Has Damage or Malfunction**	**REPAIRED/ Machine Has Been Repaired**	**Problem Description**
C-1 Inspect Boom Extending/ Retracting Wire Ropes and Pulleys				
C-2 Replace Hydraulic Tank Air Filter				
C-3 Inspect Weighing System				
Checklist D Procedures				
Items	**YES/Machine is in Good Condition**	**NO/Machine Has Damage or Malfunction**	**REPAIRED/ Machine Has Been Repaired**	**Problem Description**
D-1 Replace Drive Reducer Gear Oil				

REPAIR & INSPECTION REPORT				
D-2 Replace Slewing Reducer Gear Oil				
D-3 Replace Hydraulic Oil				
D-4 Replace Hydraulic Tank Suction Filter				
D-5 Inspect Boom Wear Pads				

User	
Inspector Signature	
Inspection Date	
Inspector Title	
Inspector Company	

Note:

1. The Repair & Inspection Report shall include the inspection form of each regular inspection.
2. Duplicate the Repair & Inspection Report template for each inspection. Store the completed forms for 10 years or until the machine is no longer in use or as required by machine owner/company/custodian.
3. Use the following table to record the results. After one item is complete, mark the appropriate box.
4. Record the inspection results. If any inspection item is marked as "NO", the machine must be stopped and re-inspected after repair is completed and the box marked "REPAIRED" shall be checked.

Select the appropriate inspection procedure based on the inspection type.

This Page Intentionally Left Blank

APPENDIX 4: MAJOR MODIFICATION AND REPAIR RECORD

Major Modification and Repair Record					
Model					
Serial No.					
Date	**Problem Description**	**Modification/Repair Item**	**Machine Status af-ter Change**	**Repairman's Company and Position**	**Repair-man Signature**

Note:

1. A major modification/repair is a modification/repair made to all or part of a machine that affects the stability, strength or performance of the machine.
2. Use this form to record major modifications/repairs made to the machine. Keep the form properly until the machine is taken out of service, or as requested by the machine owner/company.
3. The machine must be inspected and verified after major modifications/repairs, with the inspection items including but not limited to all items in the maintenance and inspection report.
4. If the inspection result of each item in the Maintenance and Inspection Report is "YES", the "Machine Status after Modification/Repair" in the form will be "Good" and the machine can be used. If either inspection result is "NO", the machine must be re-inspected after the repair is completed until the machine is in "Good" condition before continuing to use the machine.

Always for Better Access Solutions

Hunan Sinoboom Intelligent Equipment Co., Ltd.

No.128, East Jinzhou Avenue, Ningxiang High-tech Industrial Park, Changsha, Hunan, China

0086-0731-87116222 (Sales) & 0086-0731-87116333 (Service)
sales@sinoboom.com
www.sinoboom.com

North American Subsidiary

Sinoboom North American LLC

310 Mason Creek Drive
unit #100
Katy, TX 77450, US
Tel: (281) 729–5425
E-mail: info@sinoboom.us

Europe Subsidiary

Sinoboom B.V.

Nikkelstraat 26, NL-2984 AM Ridderkerk,
The Netherlands
Tel: +31 180 225 666
E-mail: info@sinoboom.eu

Korea Subsidiary

Sinoboom Korea Co., Ltd.

95, Docheong-ro, Yeongtong-gu, Suwon-si, Gyeonggi-do, Republic of Korea
Tel: 010–8310–8026
E-mail: ka1@sinoboom.com

Australia Subsidiary

Sinoboom Intelligent Equipment Pty Ltd.

50/358 Clarendon St, South Melbourne
VIC 3205, Australia
E-mail: au@sinoboom.com

Singapore Subsidiary

Star Access Solutions Pte. Ltd.

112 Robinson Road #03-01 Robinson 112
Singapore 068902

Poland Subsidiary

Sinoboom Poland sp. z o.o.

Ul. Bolesława Krzywoustego 74A
61-144 Poznań, Poland