SEAKEEPER®

INSTALLATION MANUAL

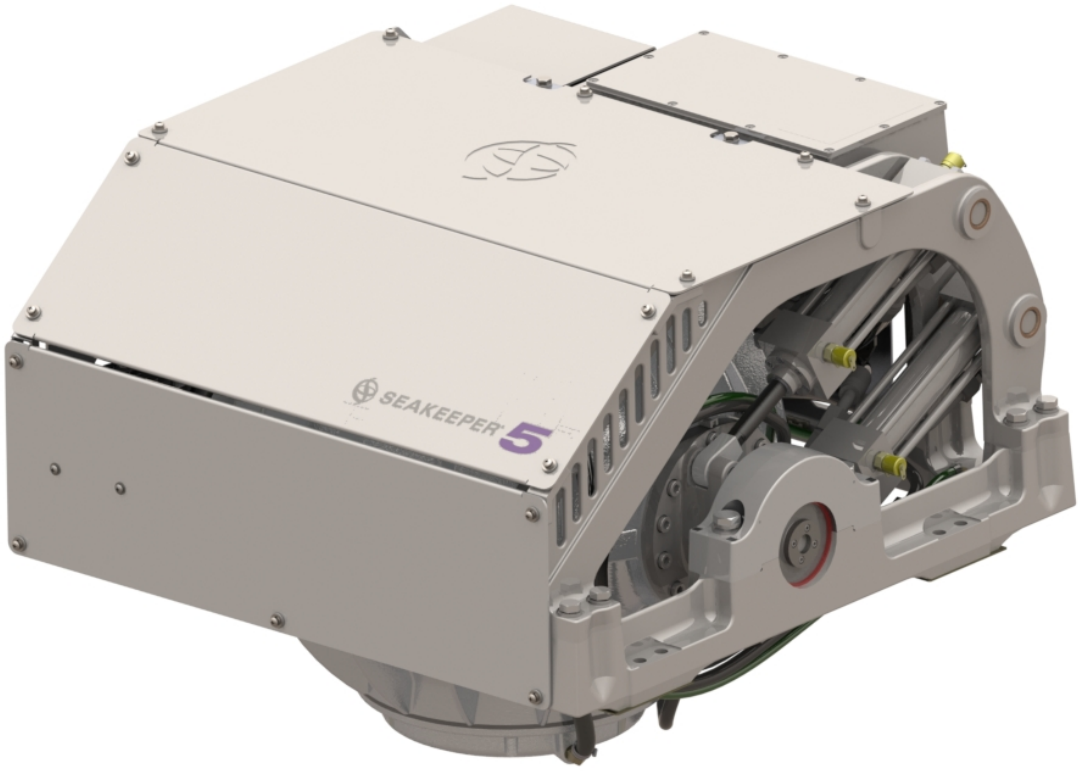

SEAKEEPER 5 GYRO

Rev 4 FEBRUARY 2015

PAGE INTENTIONALLY LEFT BLANK

SEAKEEPER 5 GYRO

INSTALLATION MANUAL

FEBRUARY 2015

Contents:

Section 1 – Mechanical Installation & PC-120 Guide

Section 2 – Electrical Installation

Section 3 – Cooling Installation

Section 4 – Startup

Section 5 – Installation Checklist and Required Supplies

SEAKEEPER®

44425 PECAN COURT, SUITE 151

CALIFORNIA, MARYLAND, 20619, U.S.A

PHONE: 410-326-1590

FAX: 410-326-1199

E-MAIL: customerservice@seakeeper.com

PAGE INTENTIONALLY LEFT BLANK

1.0 Introduction

This document is intended to give details and guidance to a boat builder or equipment installer to install the Seakeeper 5 Stabilizing Gyro. The gyro is capable of producing loads up to 13.3 KN (2987 lbs.) at each of the four mounts and careful consideration should be given to foundation design to insure it is capable of transferring these loads into the hull.

There are two methods of installing the Seakeeper 5 gyro:

1) Bolt-In Installation
2) Saddle Installation

It is assumed that the installer is familiar with bonding using high strength adhesives or mechanical fasteners to marine structures and has performed structural analysis to assure the structure to which the gyro mounts can properly transfer the loads the gyro creates into the hull structure. If the installer has any doubt about the ability of the structure to transfer the gyro loads to the hull then he should contact a licensed naval architect or marine engineer to do a structural analysis.

The installer should review the following list of reference drawings to ensure the installation procedure is fully understood.

Reference Drawings

90242 Seakeeper 5 Gyro Hardware Scope of Supply
90260 Seakeeper 5 Gyro Installation Template Kit
90293 Seakeeper 5 Gyro Installation Details – Bolt in Method
90294 Seakeeper 5 Gyro Installation Details – Bond in Method
90295 Seakeeper 5 Gyro Cooling Water Schematic
90296 Seakeeper 5 Gyro Cable Block Diagram

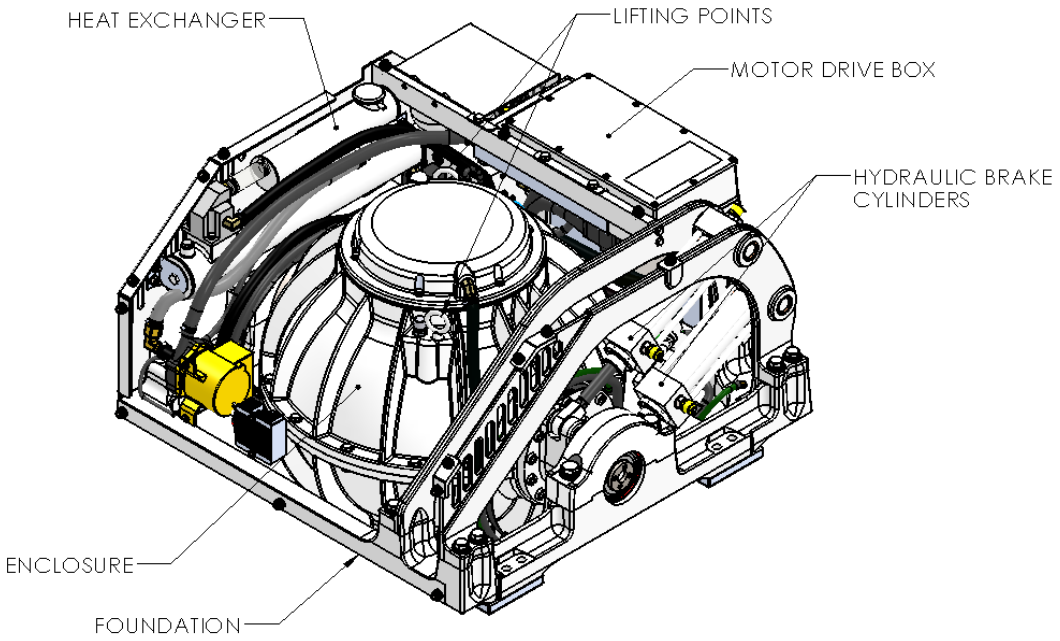

FIGURE 1 – SEAKEEPER 5 GYRO

1.1 Precautions

- Gyro must only be lifted from the supplied lifting eyes (See Section 1.4).
- Gyro flywheel is supported by precision bearings. Make certain while unpacking and lifting gyro assembly to NOT drop or impart mechanical shock as damage to bearings could result.
- While handling / installing gyro assembly, protect exposed hydraulic brake cylinder rods (See Figure 1) from scratches or damage as this could lead to premature seal failure and oil leaks.
- While handling / installing gyro assembly, do not allow electrical fittings that exit bottom of gyro enclosure to come in contact with any surface or object as this could damage the fittings and potentially affect the vacuum integrity of the enclosure.
- Exercise care to protect gyro painted finish as damage to finish could lead to early appearance degradation of installed gyro.

1.2 Selection of Gyro Installation Location

Selection of mounting location of gyro should consider the following desirable features:



The gyro must be installed aft of amidships to minimize high acceleration loadings due to hull/wave impacts during operation at high speed or in large waves.

- **Overhead access or sufficient clearance for removal / re-installation of gyro for overhaul in future years.**
- Gyro should be installed in a dry space to minimize effects of corrosion.
- Clearance for replacement of gimbal angle sensor on gyro gimbal shaft (see Figure 2).
- Clearance for filling / purging brake hydraulic oil (see Figure 2).
- Clearance for filling water/glycol cooling circuit (see Figure 2).
- Clearance for replacement of brake hydraulic cylinders (see Figure 2).

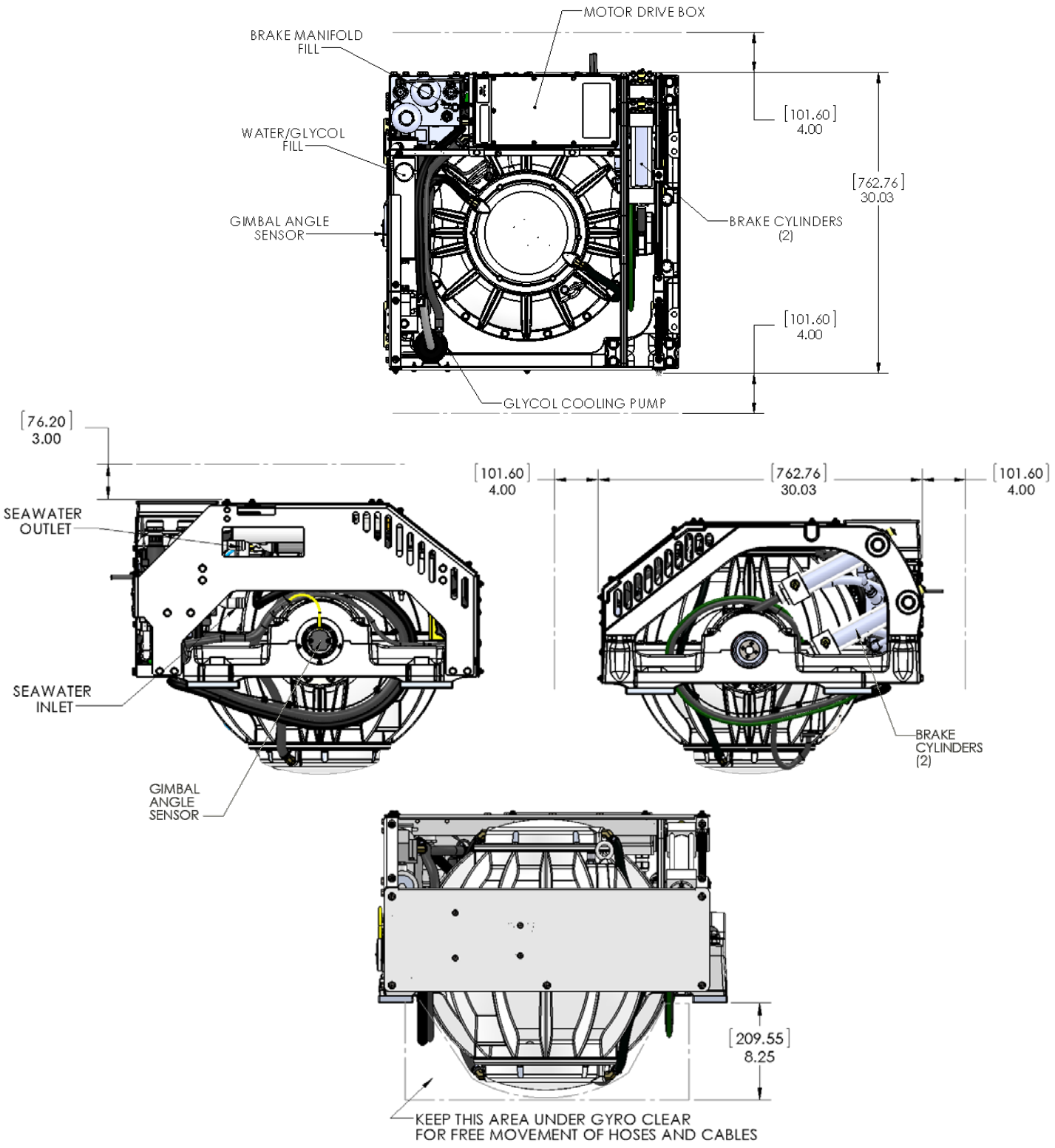

VIEWS SHOWING RECOMMENDED CLEARANCES AROUND GYRO FOR USE OF HAND-TOOLS, EASE OF MAINTENANCE, INSTALLATION AND PROPER OPERATION.

FIGURE 2 – INSTALLED GYRO CLEARANCE CONSIDERATIONS

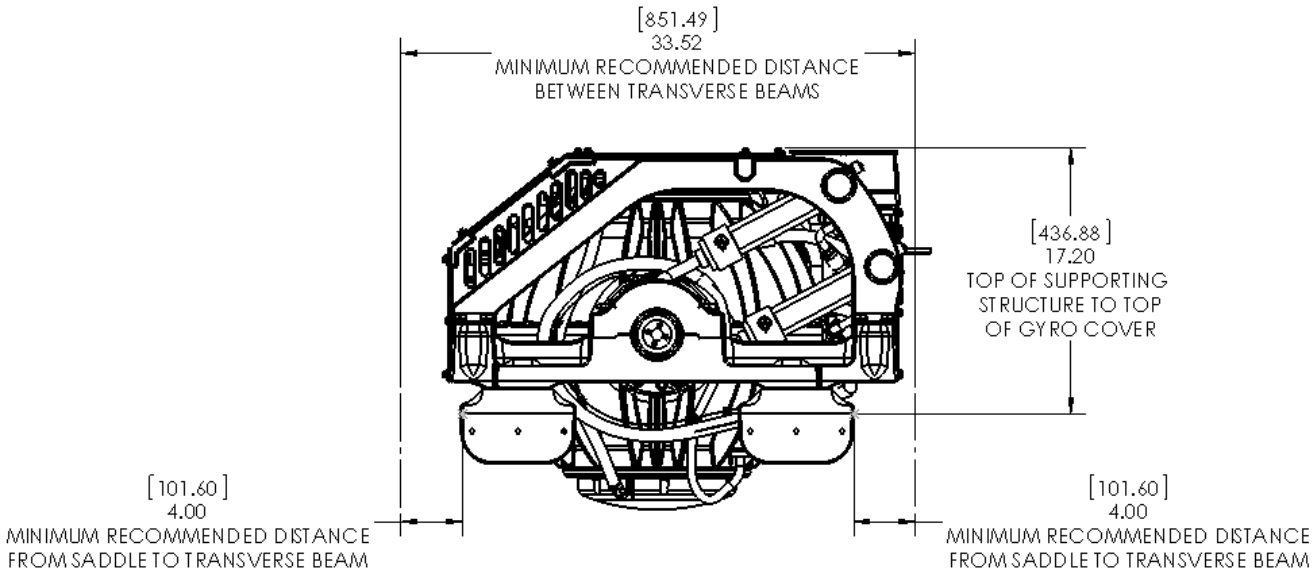

FIGURE 3 – TRANSVERSE BEAMS CLEARANCE CONSIDERATIONS

Refer to Figure 3 for recommended clearances to transverse beams. If a transverse beam is located under the forward brace, it must be 4” (102 mm) from the edge of the saddle beams to provide the necessary clearance for the swing of the motor power cable during gyro precession. Clearances aft of the gyro are shown to provide access for maintenance.

Safety





There is a large torque about the gimbal axis when the gyro is precessing. Gyro cover panels are provided to prevent personnel or equipment from contacting the gyro while it is in operation. These covers should not be stepped on, or have anything placed on top. The covers should always be in place during operation. If it is ever necessary to access the gyro while the flywheel is spinning, the gyro must be locked at the display to stop the gyro from precessing. Gyro maintenance should not be attempted unless the gyro is locked and the flywheel has stopped spinning.

The gyro should be treated with the same respect one gives a high speed rotating propeller shaft or engine shaft.

Noise/Soundproofing

Gyro noise has been measured under steady state conditions (no wave load) in Seakeeper's lab and in our test boat. The steady state noise is typically in the range of 70-75 dB un-weighted. As the frequencies emitting the highest sound pressures are low (like other marine machinery), it is recommended that the gyro be installed in a machinery space that is already treated with soundproofing.

1.3 Selection of Installation Method

The Seakeeper 5 gyro can be affixed to the hull structure using two methods 1) Use bolt-in installation or 2) saddle installation. See figures below.

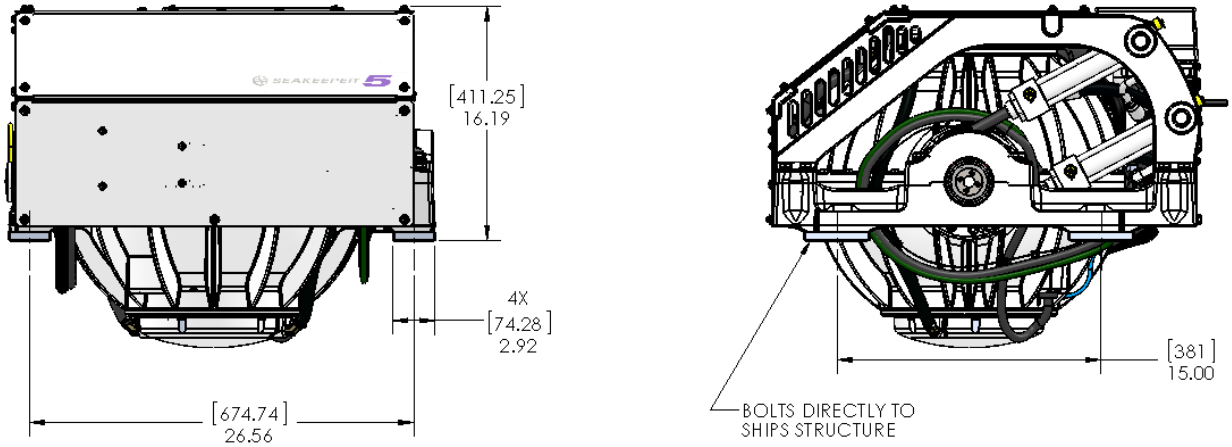

OPTION 1- DIRECT FASTENING OF GYRO FOUNDATION TO SHIPS STRUCTURE

Option 1 would be applied when a metal structure is available for attachment. The foundation would fasten directly to hull structure using isolation gaskets and 16x M12-1.75 fasteners. Depending on the structure to which the gyro is fastened, blind threaded holes or thru-bolting can be utilized.

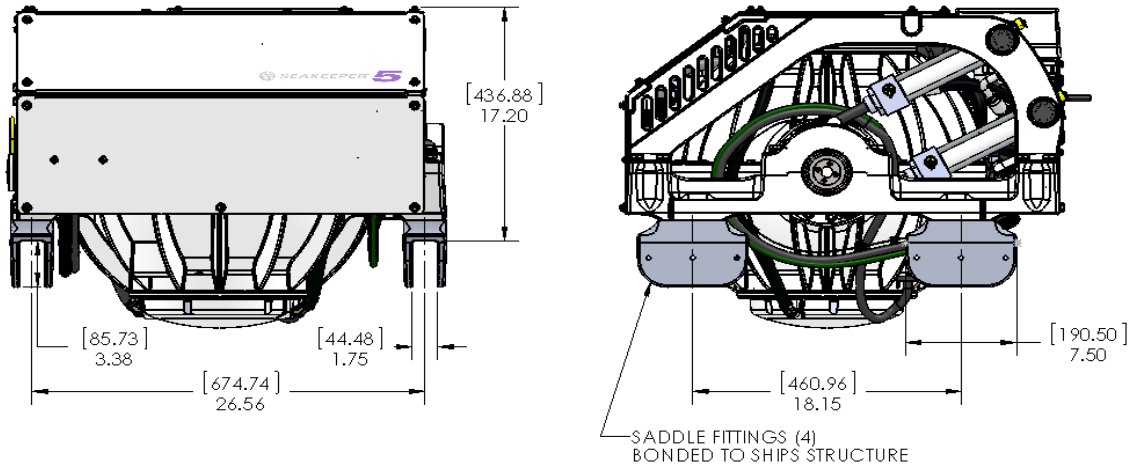

OPTION 2- SADDLE INSTALLATION (4 PLACES)

Option 2 would be most commonly used on a hull constructed of glass reinforced plastic (GRP) or fiberglass. For this option, four 7.5 inch (191 mm) long by 3.38 inch (85.7 mm) deep saddles are bonded to properly spaced and prepared structural members that are an integral part of the hull structure. Seakeeper recommends using a structural adhesive with a lap shear strength of 2000 psi (13.8 MPa) or greater. Careful consideration should be exercised by the installer while selecting the appropriate adhesive. Compatibility with the gyro's cast aluminum A356- T6 saddles, hull structure and pot life are three important factors to consider. Proper surface preparation in accordance with adhesive manufacturer's recommendations prior to installation is very important.

1.4 Unpacking Crate

1) Reference Seakeeper Drawing No. 90242, Seakeeper 5 Gyro Hardware Scope of Supply for items that ship with the gyro.
2) Remove electrical components, cables, and misc. items and set aside.
3) Remove packing materials that secure gyro assembly inside the crate.
4) Remove top and angled face cover panels to access lifting eyes
5) Attach spreader bar to the two lifting eyes located on the top of the gyro enclosure. Stay clear of any other parts on the gyro. Gyro weighs 368 kg (810 lbs). See Figure 4 below.

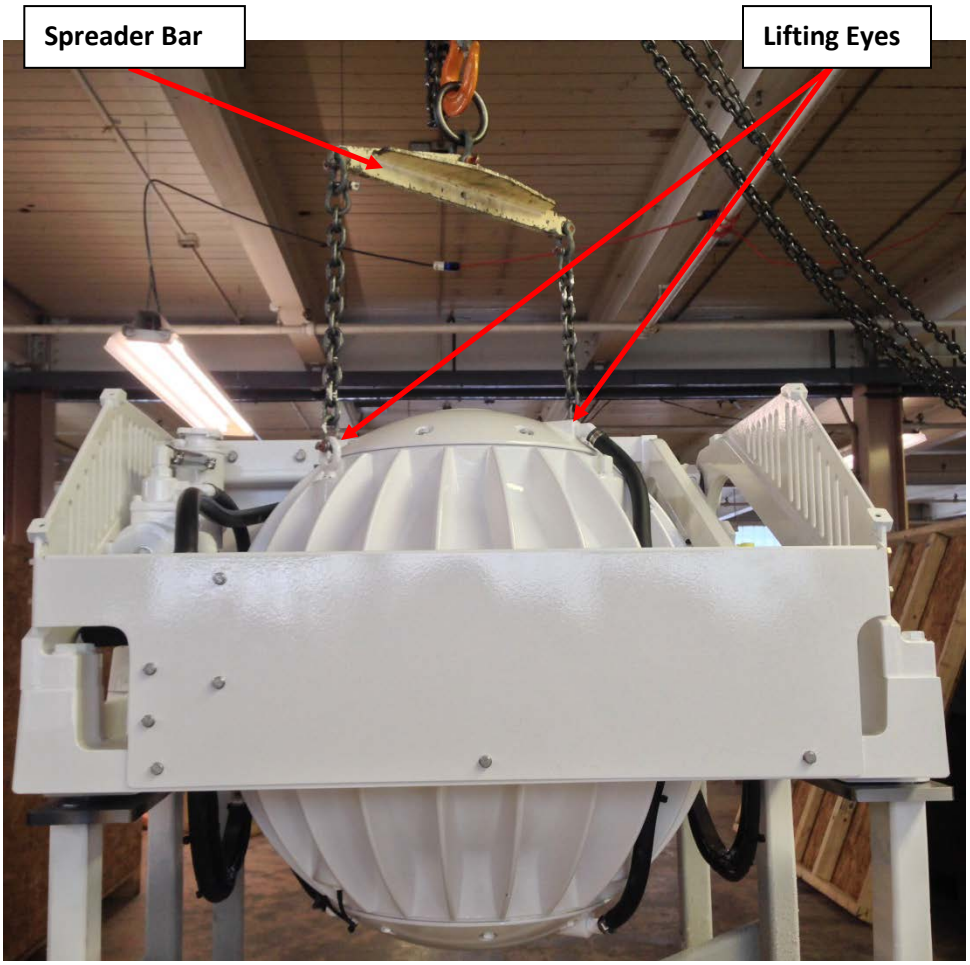

FIGURE 4 – LIFTING ARRANGEMENT

PAGE INTENTIONALLY LEFT BLANK

1.5 Bolt-In Installation

1.5.1 Check and Preparation of Hull Structure

Refer to Seakeeper **Drawing No. 90293, *Seakeeper 5 Gyro Installation Details – Bolt in Method***. Important dimensional and load information is given in this drawing that will impact the design details of the structure that will receive the gyro. It is assumed that a proper structural analysis has been performed for the hull structure to which the gyro will be fastened to insure proper strength margins for the loads the gyro will create during operation.

The hull structure supporting the gyro should be installed so the gyro is parallel to the waterline. **In addition, the four areas on top of the beams on which the feet of the gyro foundation and isolation gaskets will rest need to be co-planar within .06" (1.5 mm) to minimize potential distortion of gyro support frame when installed.**

Seakeeper provides an installation template kit, P/N 90260, which contains four plates that mimic the mating surfaces of the four feet located on the gyro's foundation. These plates have 4 holes located at the same centers as the mounting holes on the gyro. The fixture locates the hole patterns at the proper spacing both in the fore-aft direction and the port-starboard direction. See Figures 5 below. Once assembled, the fixture can be used to check clearances and alignment of the hull structure.

Note: Do NOT use the installation fixture to establish gyro envelope dimensions. Refer to Drawing No. 90293 for envelope dimensions. A 3-D model of the gyro is available on the Seakeeper website (www.seakeeper.com) to aid in designing the gyro foundation and the space around the gyro.

NOTE: MAKE SURE NO OBSTRUCTIONS FROM THE HULL STRUCTURE CAN BE SEEN WITHIN THE INSIDE OF THE INSTALLATION TEMPLATE KIT (INSIDE THE MARKED RED LINES). SEE SECTION 1, PAGE 9 OF INSTALLATION MANUAL.

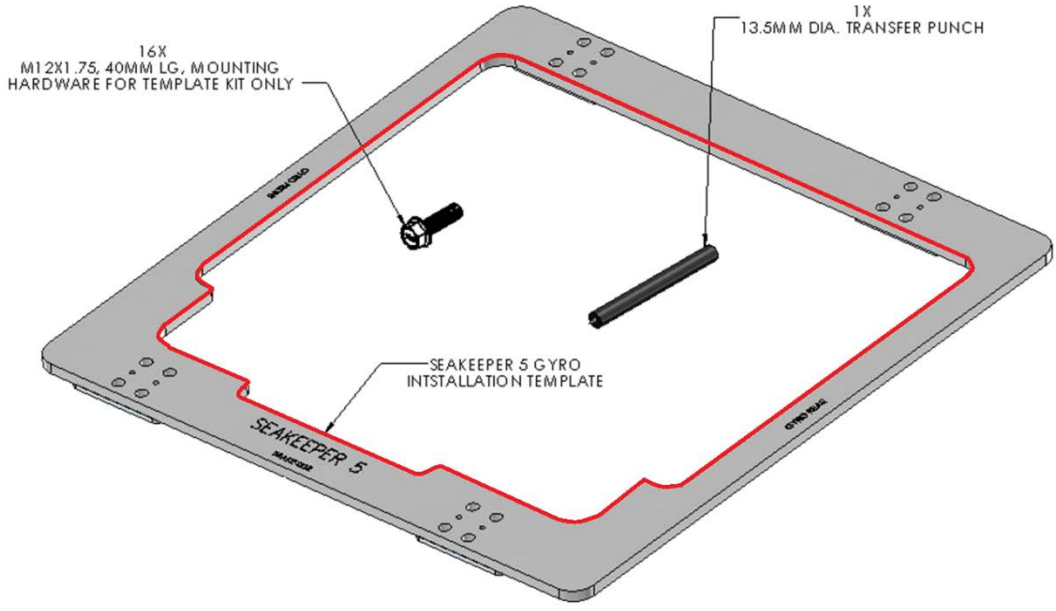

FIGURE 5 –INSTALLATION TEMPLATE KIT, P/N: 90260

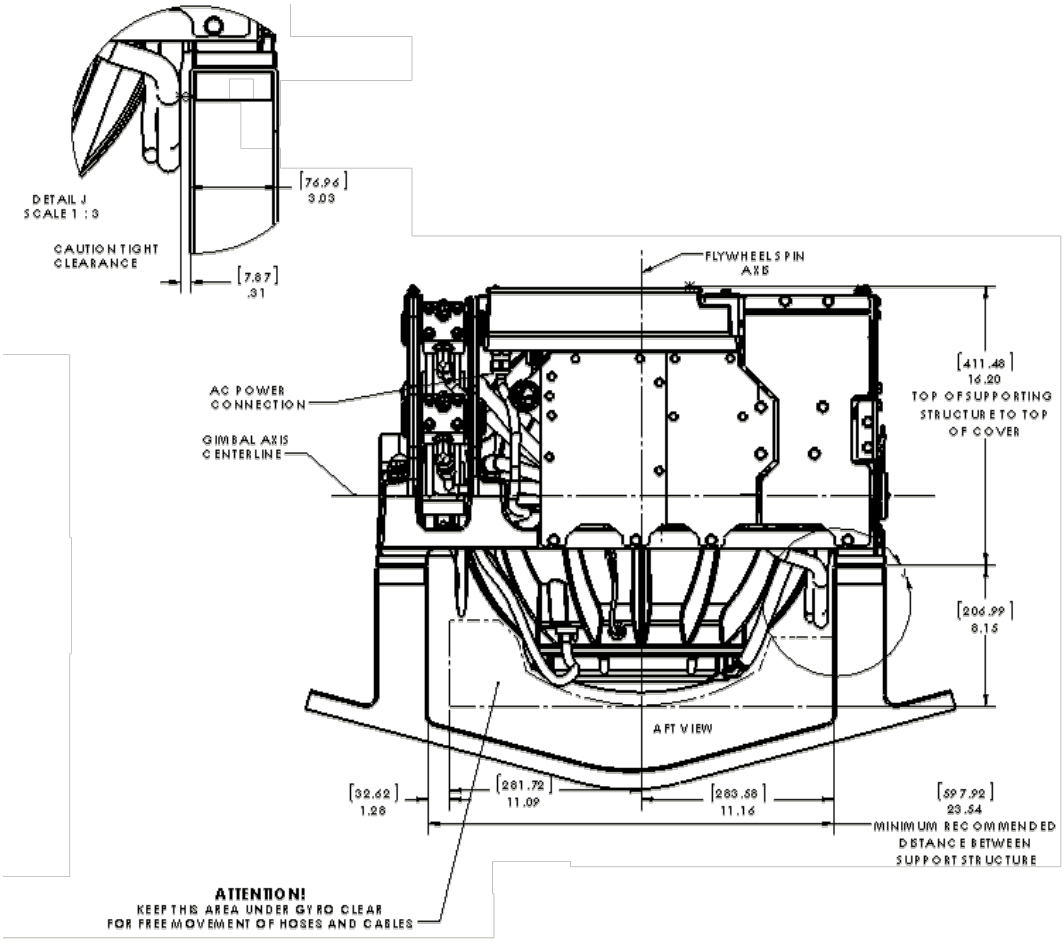

CAUTION: Tight clearances from cable guide bands and brake side gimbal shaft to hull structure. See below for brake side gimbal shaft clearance. See above figure for dimensions and reference Seakeeper drawing NO. 90293 for complete gyro envelope.

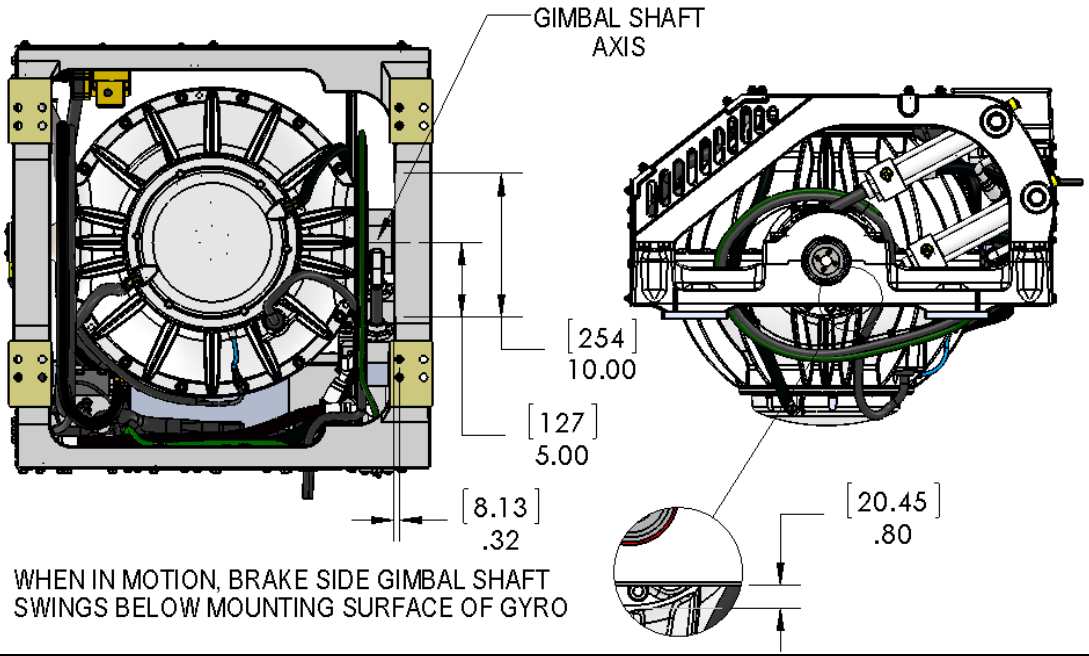

1.5.2 Transfer of Holes to Boat Structure

1) Lower assembled fixture onto gyro foundation.

2) **The four areas where the feet of the gyro will rest should be coplanar to within .06" (1.5mm). See Figure 9.**

3) Align fixture in desired location and transfer holes from fixture plate to the foundation structure. Note that holes in fixture plate are ø0.53 (13.5 mm). A transfer punch is supplied with installation template kit, P/N 90260.

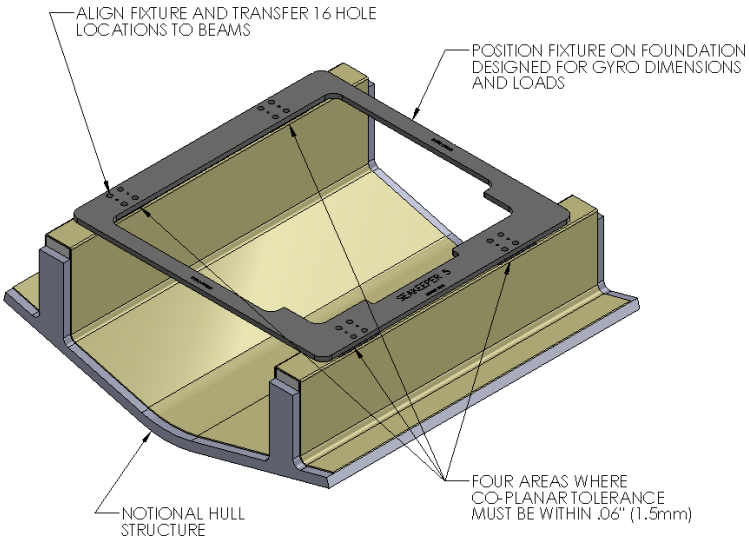

4) Remove fixture and drill and tap M12X1.75 holes in foundation at marked locations to mate with holes in the foundation. Take special care to drill perpendicular to mounting surface. Remove any impeding obstructions.

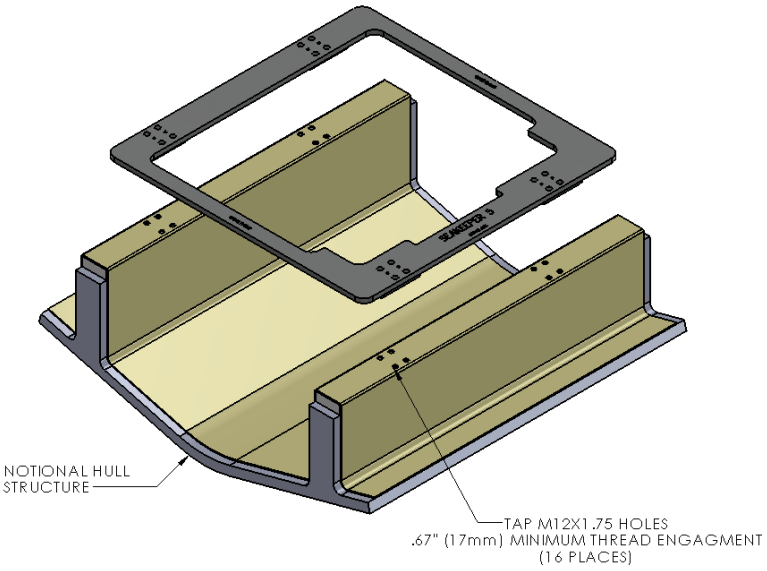

1.5.3 Installation of Gyro

1) Locate and position 4 foundation spacers, and 4 isolation gaskets onto hull structure. NOTE: Sealant or caulk is recommended to be applied. Apply a small bead (approximately 4mm wide) of sealant (silicone or caulk) between all mating surfaces of each foundation spacer and each isolation gasket. This will prevent water from wicking between the parts and setting up corrosion. Check foundation spacers and isolation gasket alignment by test fitting bolts without any obstructions.

2) Lower gyro into position onto foundation beams and align over drilled holes.

3) Install Seakeeper supplied M12 fasteners– apply a moderate coat of removable thread locker to the threads of each bolt and include a small bead of marine sealant under each washer before installation.

4) Torque all fasteners to 65 ft-lbs (88 N-m).

5) Proceed to electrical and cooling portion of the installation.

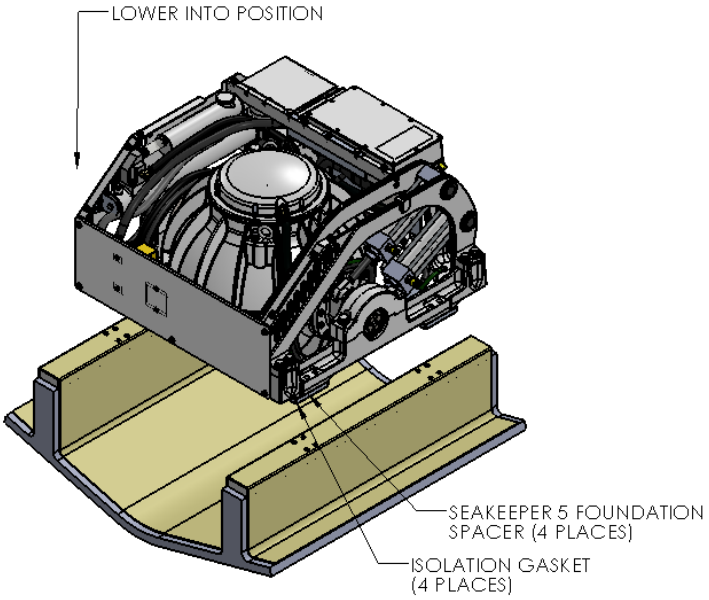

NOTE: SEAKEEPER 5 FOUNDATION SPACERS TO BE INSTALLED BETWEEN GYRO AND ISOLATION GASKET. ISOLATION GASKET TO BE INSTALLED BETWEEN FOUNDATION SPACER AND NOTIONAL HULL STRUCTURE. SEE DETAIL SECTION VIEW.

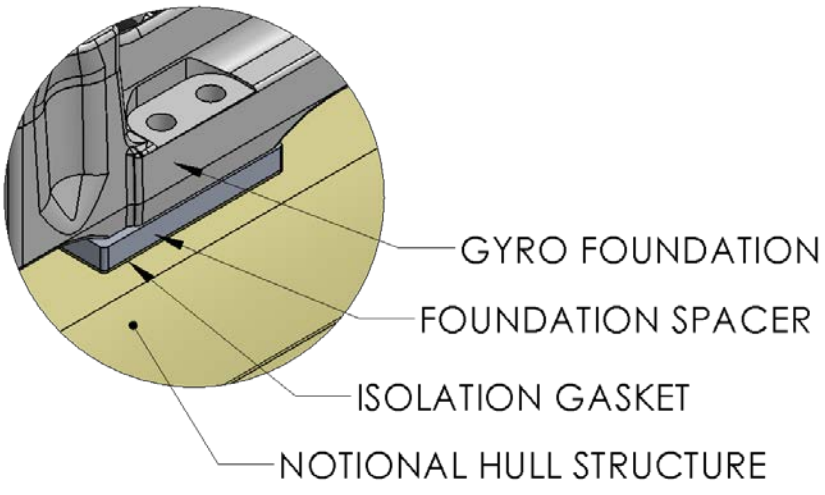

1.6 Saddle Installation

Seakeeper recommends Plexus MA590 adhesive for bonding the saddles to the GRP hull structure. Plexus MA590 is a two-part methacrylate structural adhesive that has characteristics conducive to this type of installation. Details of the bonding procedure in this manual will involve the Plexus MA590 product, but that should not exclude other suitable adhesives the installer chooses to use. **See Sheet 5 of Seakeeper drawing no. 90294 for loads information and recommended adhesive properties.**

1.6.1 Initial Check and Preparation of Hull Structure

Refer to Seakeeper **Drawing No. 90294, *Seakeeper 5 Gyro Installation Details – Bond In Method***. Important dimensional and load information is given in this drawing that will impact the design details of the structure that will receive the gyro as well as selection of the adhesive to bond the gyro into the hull.

The foundation "saddles" of the gyro are designed to be bonded directly to the composite hull structure of the vessel to effectively distribute gyroscopic loads. **A complete bond is required between the inside surface of the saddles and the hull structure**. Seakeeper recommends having a minimum of 7 cartridges (225mL), 1 bottle Plexus PC-120 Primer/Conditioner, and 2 manual adhesive guns on hand for installation. Two workers should apply the adhesive at the same time to finish the installation before the adhesive starts to cure. To aid in determining the quantity of adhesive required, the interior surface area (bonding surfaces) of **each** saddle is 58.2 in^2 (375 cm^2) for a total bonded surface area for all four saddles of 232.5 in^2 (1500 cm^2).

The hull structure supporting the gyro should be installed so the gyro is parallel to the waterline. **The four areas on top of the beams that the saddles will bond to need to be co-planar within .13" inches (3 mm) for consistent adhesive bond gap. In addition, the four areas on top of the saddles on which the feet of the gyro foundation will rest need to be co-planar within .06" (1.5 mm) to minimize potential distortion of gyro support frame when installed.**

Note that any paint or gel-coat present in bond area should be removed so that adhesive will bond directly to laminate fibers and resin.

Seakeeper provides an installation fixture template, P/N 90260 that locates the saddles at the proper spacing both in the fore-aft direction and the port-starboard direction. See Figures 6, 7 & 8 below. Once assembled with the provided saddle fittings, the fixture can be used to check saddle clearances and alignment of the hull structure. The fixture will allow the builder / installer to lay-up and adjust the foundation dimensions to create a low-clearance fit between the gyro foundation saddles and the hull structure. Shear strength of the adhesive will be maximized if the cured thickness between the vessel structure and gyro saddles is at the thinner end of the adhesive manufacturer's recommended range. Therefore, the fixture should be used to confirm that the overall dimensions of the foundations are square and level and that the adhesive gap is within Seakeeper's maximum recommended thickness of .13" or 3mm.

Note: Do NOT use the installation fixture to establish gyro envelope dimensions. Refer to Drawing No. 90294 for envelope dimensions. A 3-D model of the gyro is available on the Seakeeper website (www.seakeeper.com) to aid in designing the gyro foundation and the space around the gyro.

NOTE: MAKE SURE NO OBSTRUCTIONS FROM THE HULL STRUCTURE CAN BE SEEN WITHIN THE INSIDE OF THE INSTALLATION TEMPLATE KIT (INSIDE THE MARKED RED LINES). SEE DRAWING NO. 90294.

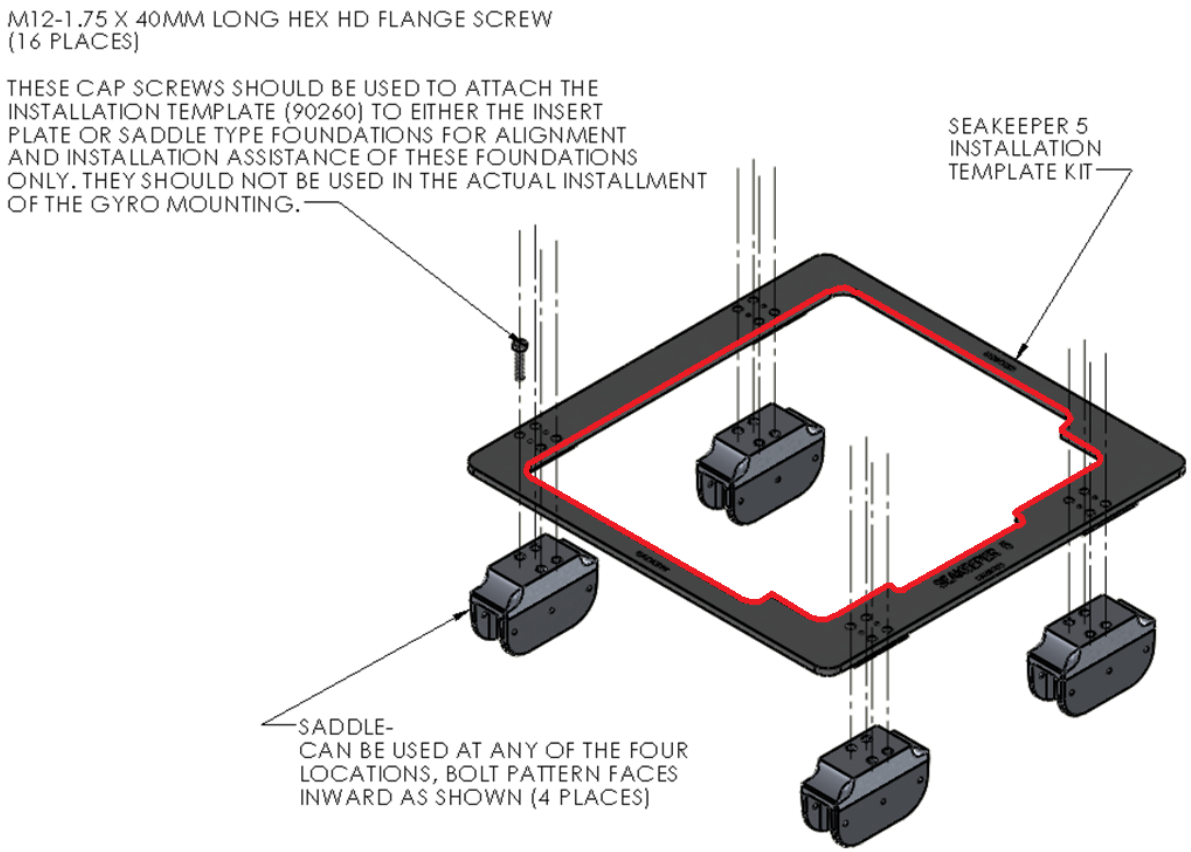

FIGURE 6 – EXPLODED VIEW OF SADDLE INSTALLATION FIXTURE

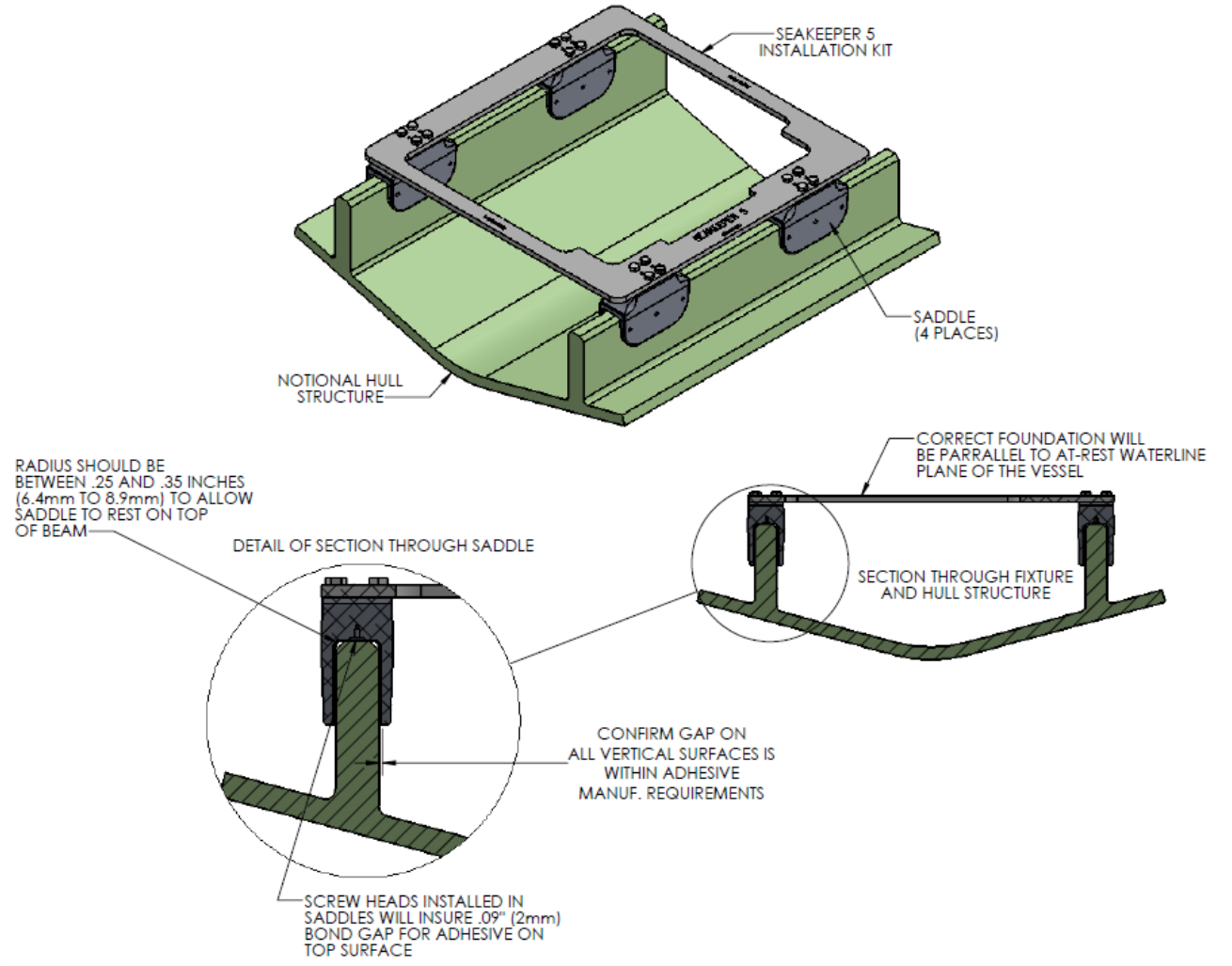

FIGURE 7 – SADDLE INSTALLATION FIXTURE ON NOTIONAL HULL STRUCTURE

1.6.2 Fiberglass Hull Preparation

1) Position installation fixture (Fig 8) on hull girders noting recommended clearances for maintenance from Figure 2. Check that the screws fastening the saddles to the installation fixture are tight (Fig 6).

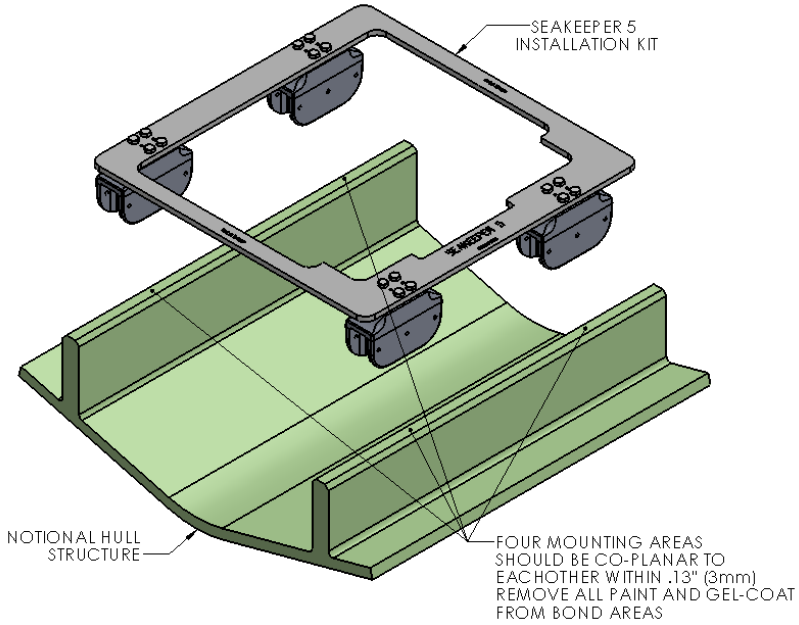

FIGURE 8 - INSTALLING FIXTURE ON HULL

2) Mask hull area (Fig 9) around foundation saddles for easy clean-up and to create outline of surface area to receive adhesive as (Fig 8). Insure that the bond gap is within Seakeeper's recommended thickness, or 3mm if using Plexus MA590.

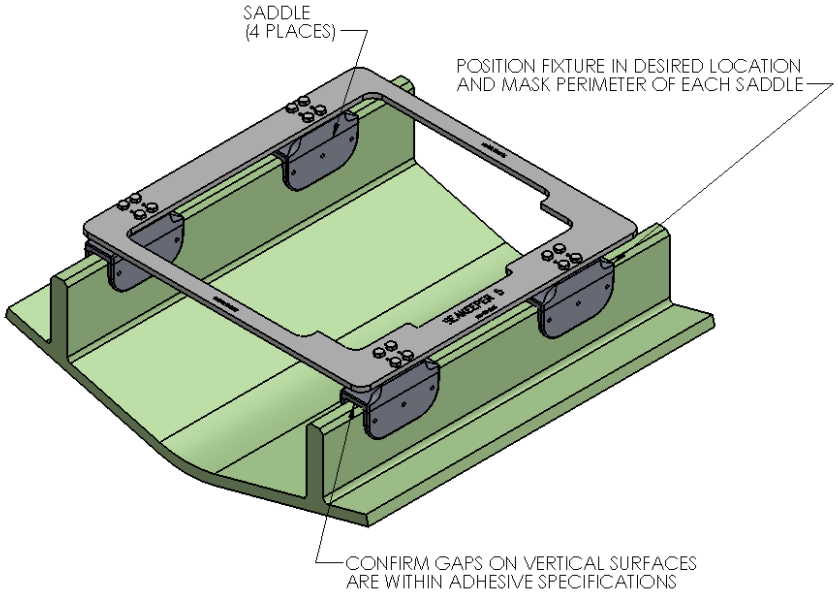

FIGURE 9 - MASKING PERIMETER OF SADDLES

3) Raise fixture clear of foundation. Check all four mounting areas are co-planar to within .13" (3 mm) to each other, as well as parallel to the water line plane, as shown in Fig 8.

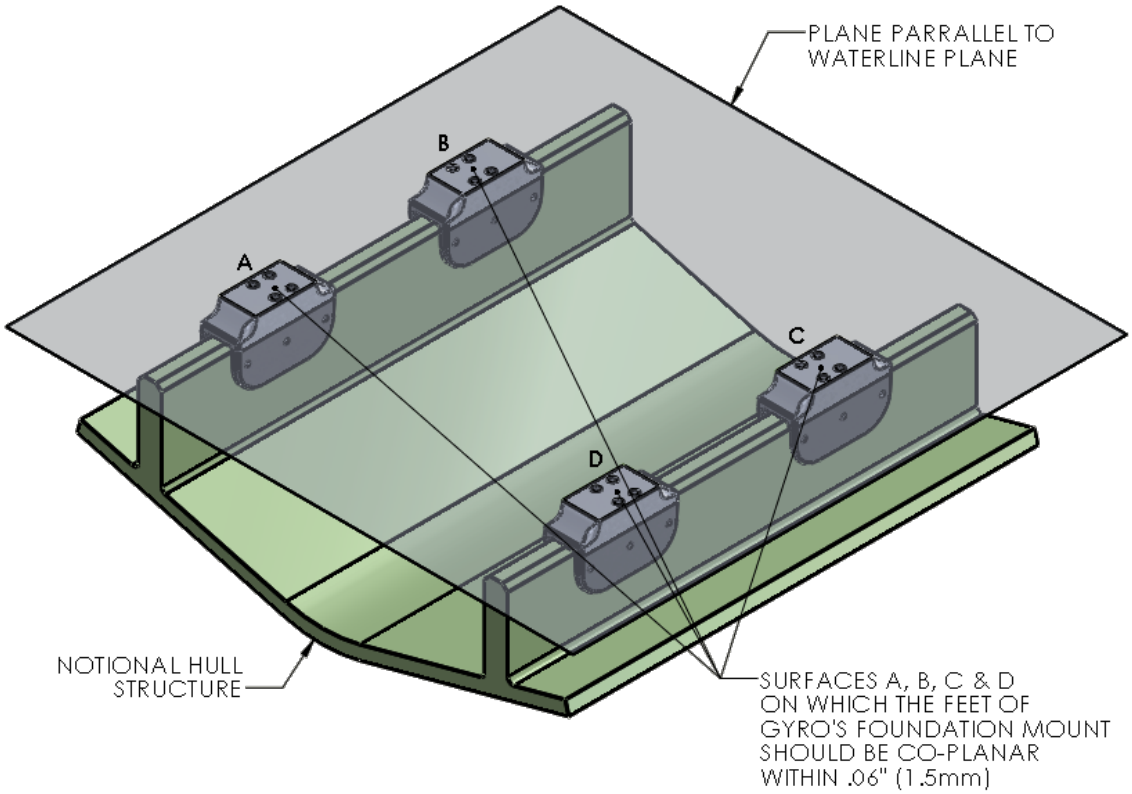

FIGURE 10 – COPLANAR PROPERTIES OF FOUNDATION

4) Thoroughly clean with alcohol or acetone all areas of girders to be bonded to remove any contaminates. Use new paper towels for cleaning, not shop rags.
5) Remove any paint or gel-coat from bond surfaces so that adhesive will bond directly to laminate fibers and resin as shown in Figure 8.
6) **Thoroughly sand girder bond surfaces with 80 grit sandpaper. (IMPORTANT – BOND STRENGTH MAY BE REDUCED IF THIS STEP IS SKIPPED.)**
7) Wipe surfaces clean from dust with alcohol or acetone using new paper towels, not shop rags.
8) Re-position installation fixture on girders and double-check that the adhesive gap is within the adhesive manufacturer's maximum recommended thickness. Seakeeper recommends a maximum gap of 3mm if using Plexus MA590.

Note if bonding saddles to a metal structure, contact Seakeeper for hull preparation instructions.

1.6.3 Gyro Saddle Preparation

1) Ensure that screws fastening saddles to the installation fixture are tight (Fig 6).

2) Check that each saddle contains 2 plastic screws which will insure an adhesive gap of .080" (2 mm) on top surface of hull as shown in Figure 11.

3) Thoroughly clean with alcohol or acetone the inside surfaces of gyro foundation saddles to remove any contaminates as shown in Figure 11. Use new paper towels for cleaning, not shop rags.

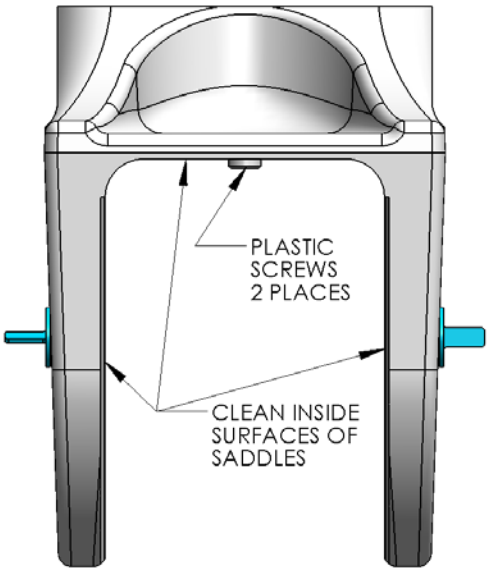

FIGURE 11 - SADDLE CLEANING

4) **Thoroughly sand all saddle inside surfaces with 80 grit sandpaper. (IMPORTANT – BOND STRENGTH MAY BE REDUCED IF THIS STEP IS SKIPPED.)**

5) Wipe surfaces clean from dust with alcohol or acetone using new paper towels, not shop rags.

6) If using Plexus MA590 adhesive, apply Plexus PC-120 surface conditioner to inside surfaces of gyro foundation saddles in accordance with manufacturer instructions. These instructions are located at the end of this section. If using an alternate adhesive, check with manufacturer if any surface conditioner/etch is required for the aluminum saddles.

1.6.4 Bonding Saddles to Hull

Note: If using Plexus MA590 adhesive, the gyro saddles should be installed when PC-120 is confirmed dry.

1) Assemble Plexus cartridge into either the manual or pneumatic gun as shown. Remove cap on cartridge and attach mixing tip. For pneumatic gun, start with low air pressure and increase until desired flow rate is achieved.



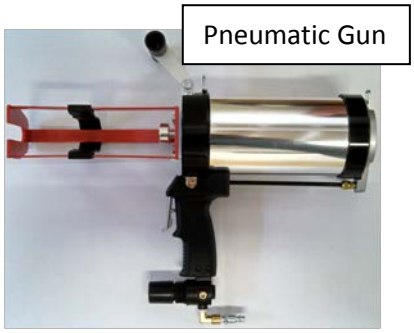

FIGURE 12 – ADHESIVE INSTALLATION SUPPLIES

2) Cut tip of mixing wand as shown in photo.



3) Prepare a second mixing wand as shown in photo below by attaching the simple flexible nozzle to the end with provided hose clamp. Set aside for now as this will be used to inject adhesive into the sides of each saddle after the fixture / saddles are in position.

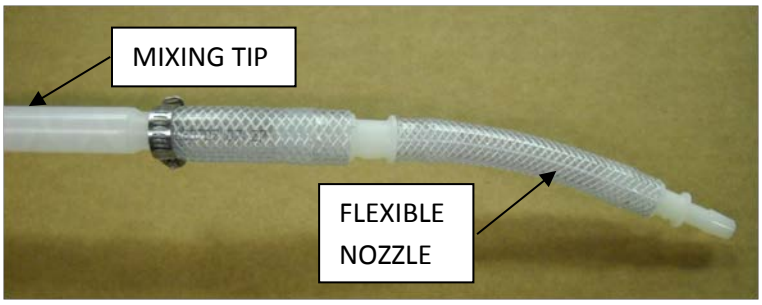

4) Install provided rubber plugs in six holes of each saddle. The plugs will limit the adhesive being forced out of the injection holes in step 6 below.

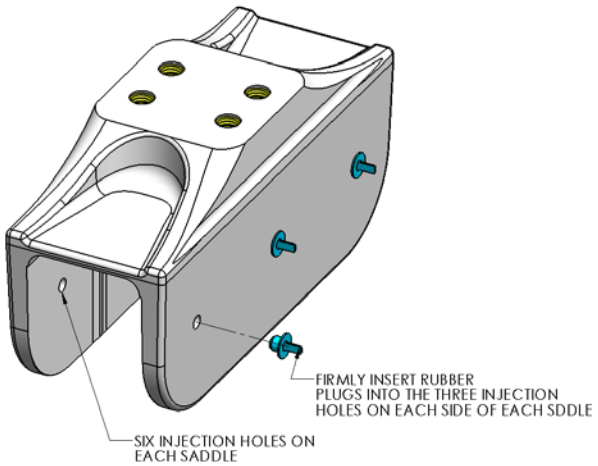

5) Apply large bead of Plexus adhesive to the hull structure as shown in the figure to the right. Apply approximately ½ to $^{2}/_{3rds}$ cartridges at each of the four locations. Work deliberate and fast as it takes some time to apply the adhesive to the structure. MA590 has a 90 minute working time at room temperature (23°C / 73°F). This working time can reduce to 40-50 minutes at elevated temperatures. Two workers should apply the adhesive at the same time to finish the installation before the adhesive starts to cure.
6) Lower fixture and saddles over the hull structure and apply light downward pressure to each of the four saddles until the two nylon screws rest on the hull structure (SEE FIG. 7). The adhesive will be forced towards the forward and aft ends of each saddle and partially down the sides of the foundation beams.
7) Insert full adhesive cartridge along with mixing wand / nozzle assembled in step 3 above into gun.
8) Begin to inject adhesive into the six holes provided on each side of each of the four saddles. Follow the numbered sequence shown until the adhesive pushes out the edges of the saddle perimeter. The intent is to pump in the adhesive working from the top down and from the middle to the ends to fill the gaps and displace any air.

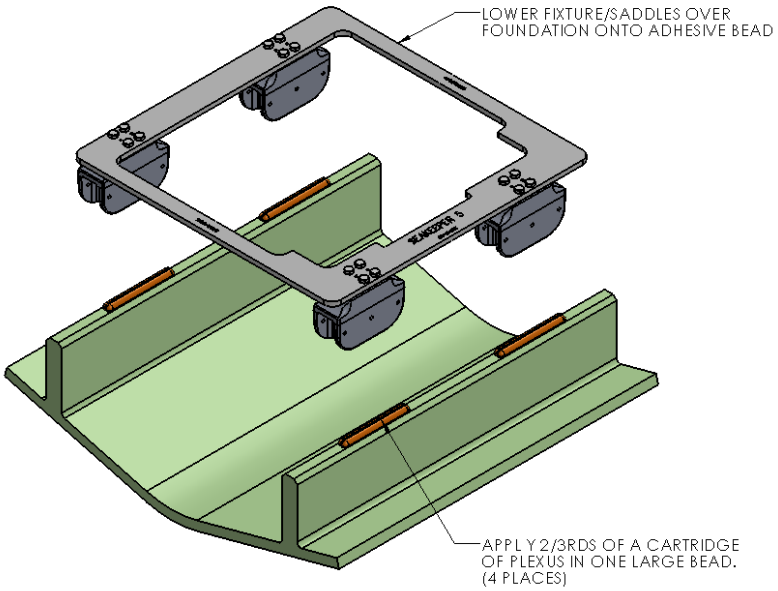

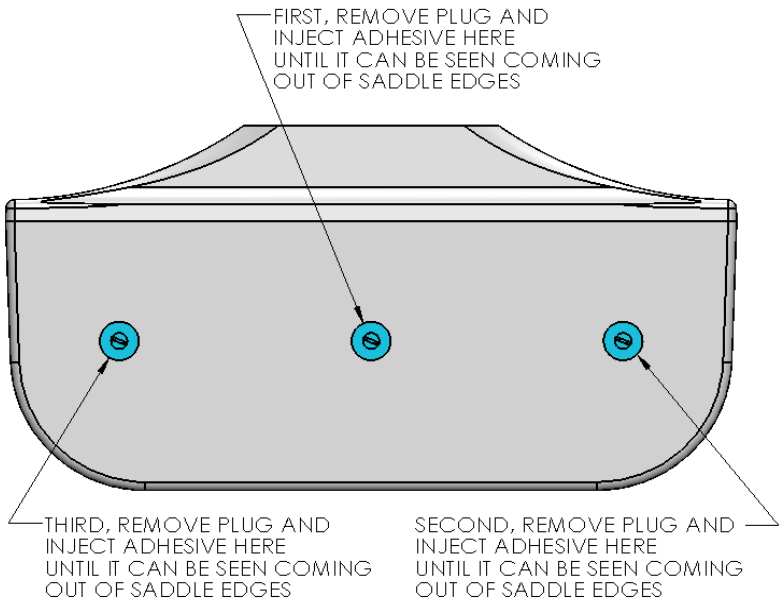

CONTINUE IN SEQUENCE UNTIL AN EVEN AMOUNT OF ADHESIVE IS SEEN COMING OUT OF ENTIRE PERIMETER OF SADDLE

A complete bond is required – excess adhesive will be needed to make sure all bond gaps are filled.

9) Repeat above step for remaining 7 sides of the saddles.
10) When gaps have been completely filled, clean off excess adhesive, remove plugs, and remove masking tape.
11) Allow adhesive to cure per manufacturer's recommendations. Follow adhesive guidelines for curing time versus temperature prior to removing the fixture.
12) Bonding of gyro saddles onto the hull is now complete. Remove installation fixture.

1.6.5 Installation of Gyro

1) **The four areas where the feet of the gyro will rest should be coplanar to within .06" (1.5mm). See Figure 10.**

2) Rig gyro for lifting and lower gyro into position onto top surface of four saddles.

3) Apply a small bead (approximately 4mm wide) of sealant or caulk to the mating surfaces between the saddles and the gyro foundation. Adjust position of gyro until alignment is achieved for the 16 fasteners that will attach gyro foundation frame to saddles.

4) Install Seakeeper supplied M12 fasteners– apply a moderate coat of removable thread locker to the threads of each bolt and include a small bead of sealant under each washer before installation.

5) Torque all fasteners to 65 ft-lbs (88 N-m).

6) Proceed to electrical and cooling portion of the installation.

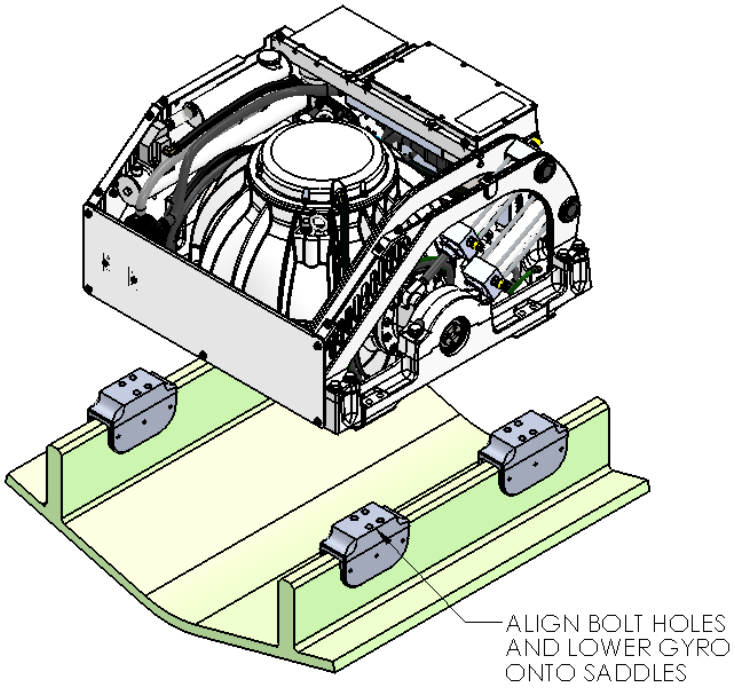

NOTE:
CHECK FOUR MOUNTING AREAS
ON SADDLES ARE CO-PLANAR
WITHIN .06" (1.5mm). SEE FIGURE 10.

1.7 Doc # 90213 Plexus PC-120 Application Instructions

What is Plexus PC-120?

- Plexus PC-120 is a dual function primer/conditioner designed to clean surface contamination and leave a thin coating of primer on specific metal surfaces.
- Although designed specifically for cleaning and priming of Aluminum and Stainless Steel, PC-120 can be used to clean other surfaces in special situations. Contact Plexus Technical Service for recommendations on any surface other than Aluminum or Stainless Steel.

Plexus PC-120 works by:

- Cleaning the surface of contamination using Isopropyl Alcohol to “lift” machine oils and other contamination.
- Depositing a thin Phosphate based coating to retard corrosion.
- Leaving a light “pink” color to assist in determining what areas have, and have not, been treated with PC-120.

How should PC-120 be used?

- PC-120 can be brushed, wiped or sprayed onto the surface being primed.
- The PC-120 applied should then be wiped with a clean dry rag to remove any surface contamination cleaned by the PC-120 and leave only a thin, quick drying film.
- Dirty or oily rags should be replaced to avoid improper cleaning.
- Quality dye-free paper towels that don’t leave fibers behind are recommended.

Common mistakes with PC-120

1) Using too much PC-120
2) Not removing the oils lifted off the metal surface before the PC-120 dries.
3) Not abrading corrosion that is already on the surface of the metal.
4) Using PC-120 past its shelf life.

1) Using too much PC-120

- Only a very thin coat should be left on the metal. You should be able to see a slight "pink" cast as illustrated below.

Too Much PC-120



Correct Amount



2) Not removing oils once primed

- The solvents in PC-120 will clean and "lift" most machining oils, but if the metal isn't wiped clean of these oils then they will be deposited right back onto the metal surface when the solvent in PC-120 evaporates!
- While still wet, wipe the PC-120 applied to the surface with a clean dry paper towel, changing the paper towel as needed.

Wipe the surface with a dry rag

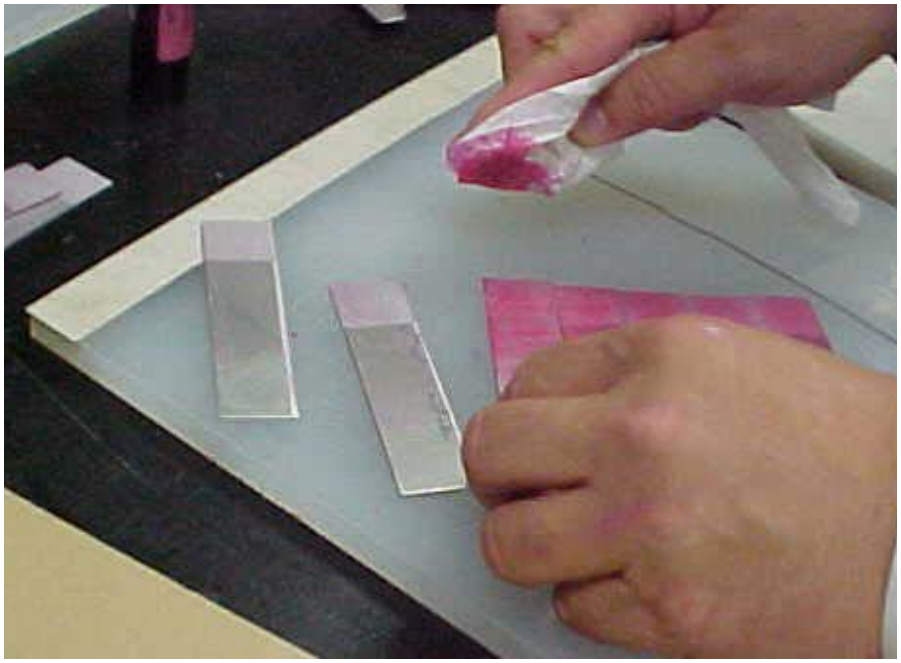

Replace the rag when dirty

- Notice how much aluminum oxide was cleaned off "clean" looking Aluminum



3) Not abrading corroded surfaces

- As good as PC-120 is, it can't help bonding performance if applied to a surface that is already corroded!
- Any surface that shows signs of corrosion should be cleaned by sanding or wire brushing to remove any scale or corrosion.
- After removal of corrosion then treat the surface with PC-120 as you normally would.

4) Using PC-120 past it's shelf life

- When stored under normal conditions PC-120 has a shelf life of 12 months in an unopened, original container.
- PC-120 bottles are marked with a lot number that is a simple 8 digit code that gives you the date of manufacture.
    - "807241" for example is 200**8**, **07** month (July), **24**th day (the "**1**" refers to the first batch of PC-120 made that day). Use the lot number to make sure the material is still within shelf life.
- Since it contains isopropyl alcohol, PC-120 should be tightly capped when not in use to stop evaporation.

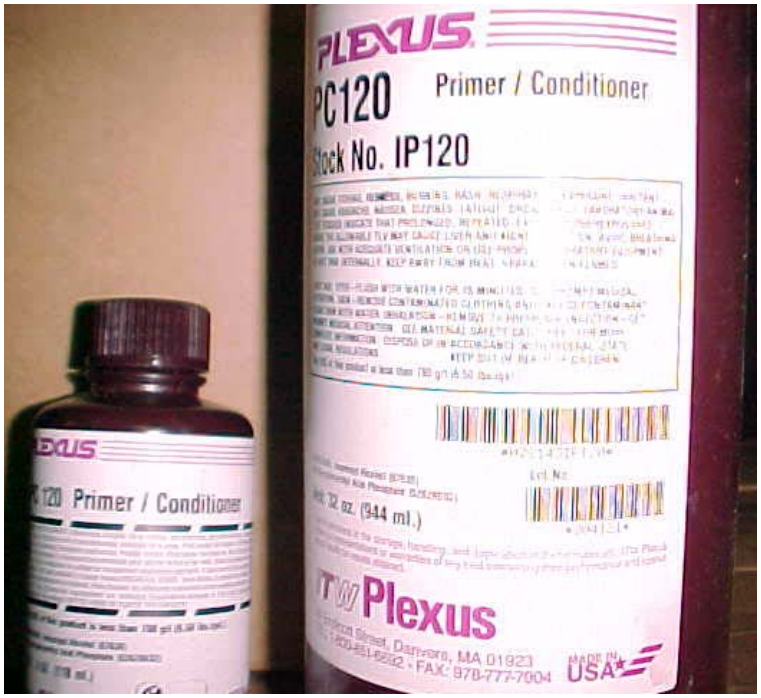

Remember these points! To avoid problems with Plexus PC-120:

- Don't use too much PC-120. Only a thin layer is needed.
- Use a clean rag to wipe PC-120 off before it completely dries to remove surface contaminants it has cleaned. Good quality paper towels are a better choice to minimize introduction of contaminates to surface.
- Any sign of corrosion already on the surface should be removed by abrading BEFORE priming.
- Check the lot number for the date to make sure the PC-120 is less than a year old.

Questions

- Please contact Plexus Technical Service at 1-800-851-6692 or info@itwplexus.com

2.0 Introduction

This section for electrical installation explains how to mount the electrical equipment and how to connect the electrical cables.

Reference Documents & Drawings

90242 Seakeeper 5 Gyro Hardware Scope of Supply
90246 Seakeeper 5 Gyro Operation Manual
90247 Seakeeper 5 Gyro Drawing Manual
90296 Seakeeper 5 Gyro Cable Block Diagram)
90337 Color Operator Display Envelope and Mounting Details

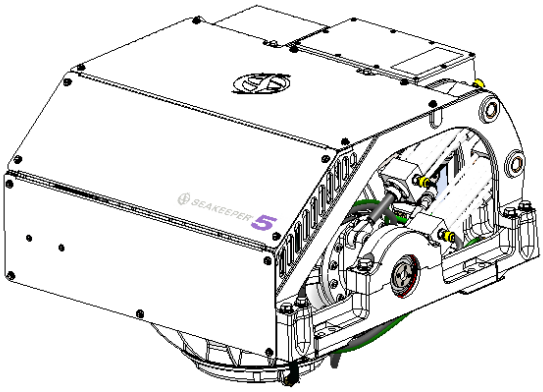

SEAKEEPER 5 Gyro, Front Oblique View

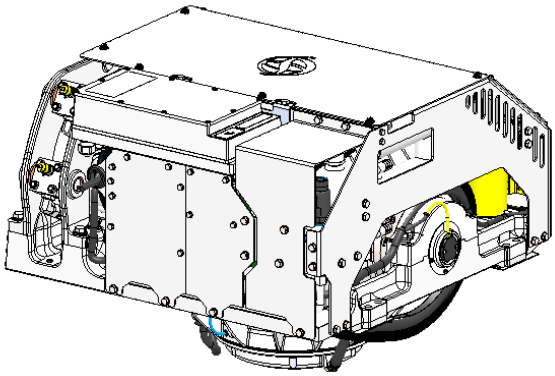

SEAKEEPER 5 Gyro, Rear Oblique View



12VDC Power Connector



Terminator, Female



Tee Adapter



Color Display

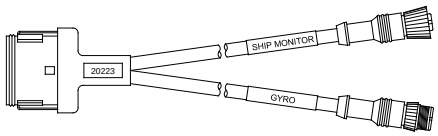

Display Interface Cable



25m Cable

FIGURE 1 – ELECTRICAL EQUIPMENT FOR SEAKEEPER 5 GYRO

2.1 Electrical Equipment Mounting

Precautions

- Each item of electrical equipment has specific mounting instructions. These instructions should be followed to insure proper function of the SEAKEEPER 5 Gyro.



Do NOT move Gyro mounted components from their locations or incorrect Gyro operation will result.

1. COLOR DISPLAY MOUNTING INSTRUCTIONS, SURFACE MOUNT

a. Console space required: Approx. 4.57 W x 4.57 H inches (116 x 116 mm)

b. Mounting Instructions, Surface Mount: See drawing 90337 for details

2. SERIAL COMMUNICATIONS TEE ADAPTER AND TERMINATOR MOUNTING INSTRUCTIONS

a. Console space required, Rear: Approx. 4 W x 3 H inches (102 x 76 mm)

b. Mounting Instructions: Rear mount on vessel console panel, within 1 ft (0.3m) of Display.

c. Hardware required: One mounting screw for .197” (5 mm) diameter mounting hole on Tee Adapter.

2.2 Electrical Equipment Power Connections

1. AC INPUT POWER SOURCE REQUIREMENTS

a. Either of two AC input voltages are acceptable:

i. 110 VAC (nominal), 1 Phase, 50/60 Hz, 25 Amps.

ii. 230 VAC (nominal), 1 Phase, 50/60 Hz, 20 Amps.

b. A separate circuit breaker should be used for each Drive Box.

c. The Seawater Pump connected must be rated for the same AC voltage as the AC input voltage, 5 Amps maximum.

2. DRIVE BOX AC POWER INPUT CONNECTION INSTRUCTIONS

a. Cable: 3 x 10AWG (3 x 6mm^2 CSA), 10’ (3m) length, Seakeeper supplied pre-installed.

i. Locate CABLE 2 for AC power input to the Drive Box at the outward of three cable glands.

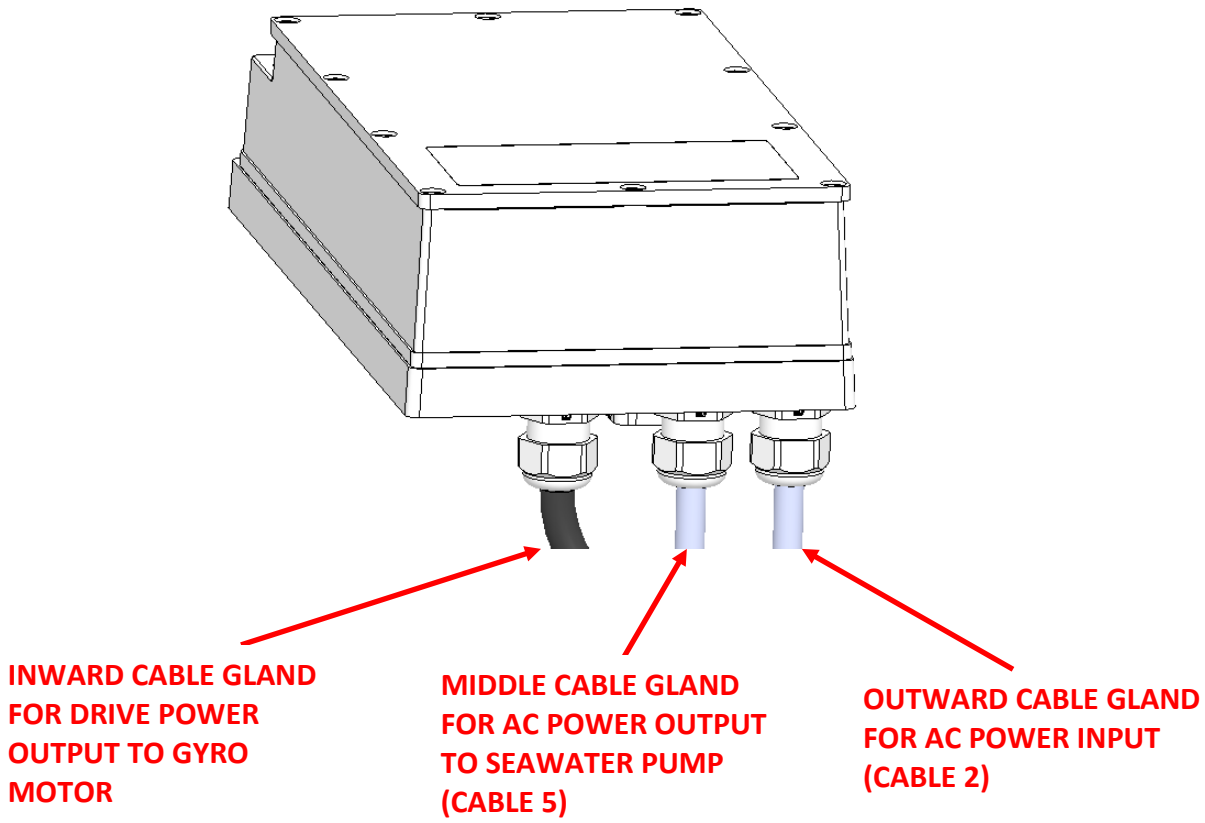

FIGURE 2 – DRIVE BOX AC POWER INPUT & OUTPUT CABLE GLANDS

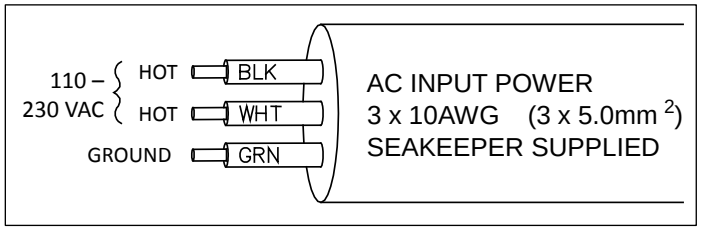

FIGURE 3 – CABLE 2 WIRE CONNECTIONS AT AC POWER DISTRIBUTION PANEL

ii. Connect AC input conductors in CABLE 2 to a double-pole Circuit Breaker at an AC power distribution panel according to Figure 3 above.

1. 110 VAC, 25 Amp circuit breaker
2. 230 VAC, 20 Amp circuit breaker

3. DRIVE BOX AC POWER OUTPUT TO SEAWATER PUMP CONNECTION INSTRUCTIONS

a. Cable: 3 x 14AWG (3 x 2.0mm^2 CSA) cable, 10' (3m) length, Seakeeper supplied pre-installed.

b. Pumps rated at 110 or 230 VAC, 5 Amps max., Customer-supplied.

Verify that AC power is OFF to the Drive Box before connecting CABLE 5 to a Seawater Pump.

i. Locate CABLE 5 for AC power output to the Seawater Pump from the Drive Box at the middle of three cable glands. (See Figure 2.)

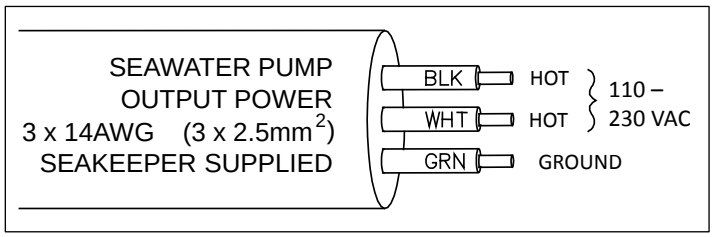

FIGURE 4 – CABLE 5, AC OUTPUT POWER CABLE

ii. Connect the AC output conductors in CABLE 5 to a 5 Amp maximum, Seawater Pump (approximately 1/3 horsepower or 250 W) according to Figures 4 and 5.

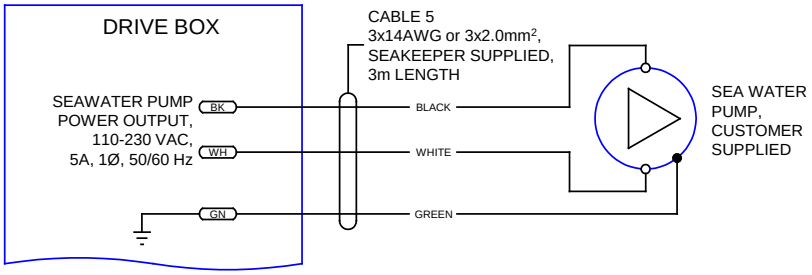

FIGURE 5 – CABLE 5, WIRE CONNECTIONS TO SEAWATER PUMP

c. If the customer-supplied Seawater Pump is not rated for the applied AC input voltage, the CABLE 5 output may be used to switch a customer-supplied relay.

   i. Locate CABLE 5 for AC power output to the Seawater Pump from the Drive Box at the middle of three cable glands as shown in Figure 2.

   ii. The recommended wiring is shown in Figure 6. Refer to Figure 4 for Cable 5 wire connections.

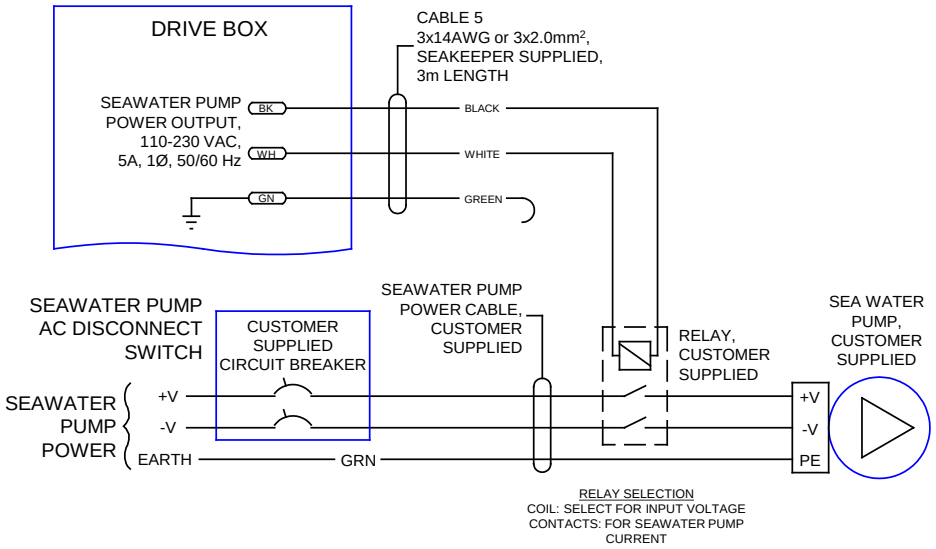

FIGURE 6 – RECOMMENDED WIRING FOR SEAWATER PUMPS NOT MATCHING INPUT AC VOLTAGE

d. If CABLE 5 is not used, bundle cable and secure to forward brace or other area nearby which will not come in contact with moving parts during gyro operation. Do NOT cut CABLE 5 as it contains live voltage when gyro is in operation. Gyro ships with CABLE 5 permanently sealed at end of cable with protective cap in the event it is not used. Do NOT remove CABLE 5 from Drive Box as moisture will be free to enter box through open cable gland and corrode internal electronic components.

Cable 5 contains live voltage when gyro is in operation. Do NOT cut Cable 5. Do not remove Cable 5 from Drive Box.

4. 12 VDC POWER SOURCE REQUIREMENTS

a. 12 VDC, 15 Amps.

b. A separate breaker should be used for each Gyro.

5. GYRO DC POWER CONNECTION INSTRUCTIONS

Reversing polarity on the DC power input to the gyro can result in damaging the electronics in the control system.

a. 12 VDC, 15 Amps. 2 x 12AWG (3 x 4mm^2 CSA) customer supplied.

i. Install Seakeeper provided DC Power Input Cable, P/N: 20248 as CABLE 1.

1. Route CABLE 1 to DC Power Distribution Panel.
2. Terminate RED conductor to +12 VDC. Terminate BLACK conductor to 12V Rtn or Zero VDC.

ii. Before connecting CABLE 1 to gyro, check for proper voltage and polarity with a DC multimeter using Figure 7 below.

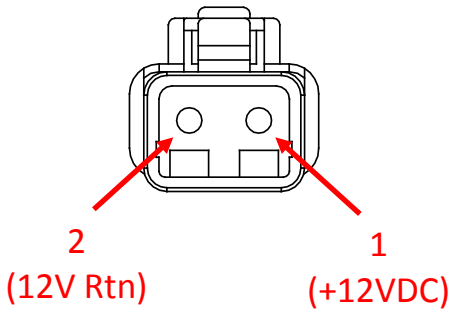

FIGURE 7 – DC POWER INPUT CONNECTOR
CONTACT ASSIGNMENTS (front)

iii. Connect CABLE 1 to 12VDC input receptacle on Gyro.

When energizing DC power the first time, if Display does not power up immediately then disconnect and inspect connector polarity.

2.3 Electrical Equipment Ground Connections

1. GYRO TO VESSEL GROUND CONNECTION INSTRUCTIONS

a. Connect the Gyro foundation to vessel ground.

i. Install CABLE 6 (4AWG or 22.0mm^2, Customer supplied) from the M6 brass ground stud on the Gyro rear brace to a suitable vessel ground.

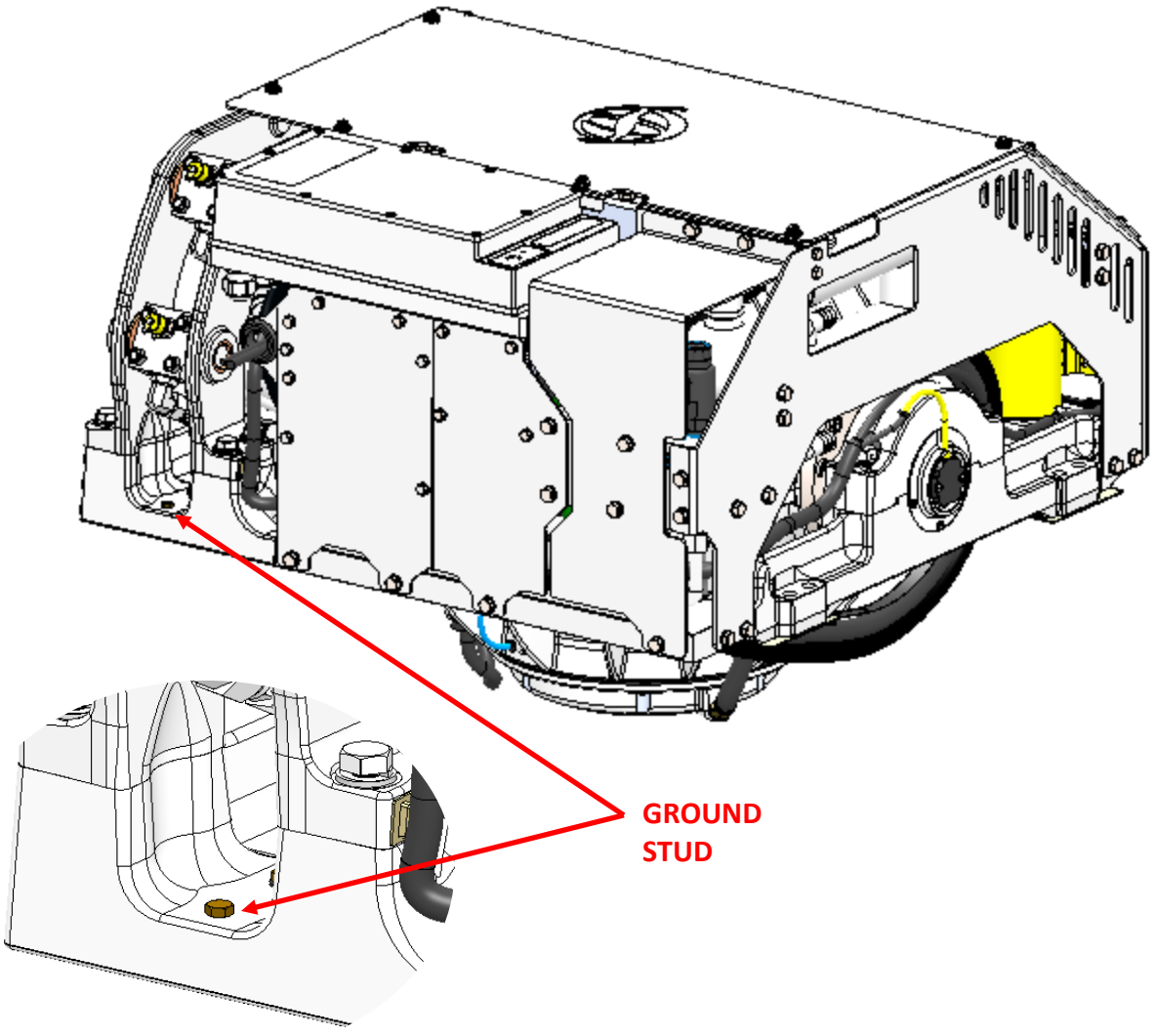

FIGURE 8 – GYRO GROUND STUD ON REAR OF FOUNDATION

2.4 Operator Station

This section explains the connection between the Operator Station equipment and the Gyro Control Box.

Reference Drawing

90296 SEAKEEPER 5 Gyro Cable Block Diagram

1. DETERMINE LOCATION OF OPERATOR STATION

a. The desired location of the Operator Station must be determined with respect to the vessel arrangement.

b. The operator display should be located on the bridge console.

c. Figure 9 below shows the CANbus communications link for the Operator Station. The Terminator goes on one the far end of the Tee Adapter from the Gyro.

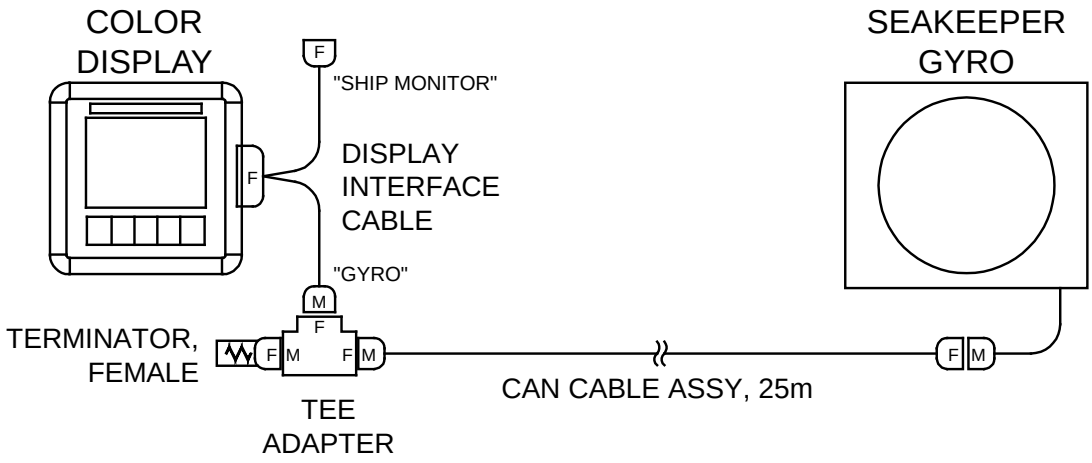

FIGURE 9 – SERIAL COMMUNICATIONS LINK FOR OPERATOR STATION

2. ROUTE SERIAL COMMUNICATIONS CABLE

a. The CAN Cable Assembly (30243, CABLE 5) is a 25 meter shielded cable and the largest connector is a molded plug with maximum outer diameter of .58 inch (14.8mm).

b. CABLE 5 must be routed and installed in the vessel from the Gyro (female end) to the Tee Adapter (male end) at the Operator Station.

3. INSTALL OPERATOR STATION EQUIPMENT

a. The Operator Station equipment is installed at the selected location using Electrical Equipment Mounting Instructions in Section 2.1.

4. CONNECT OPERATOR STATION EQUIPMENT

a. The Operator Station equipment is connected in accordance with the Cable Block Diagram, 90296.

PAGE INTENTIONALLY LEFT BLANK

2.5 Display Installation Template

The following template is for mounting. Before using this template, measure to ensure that the shown size is actual.

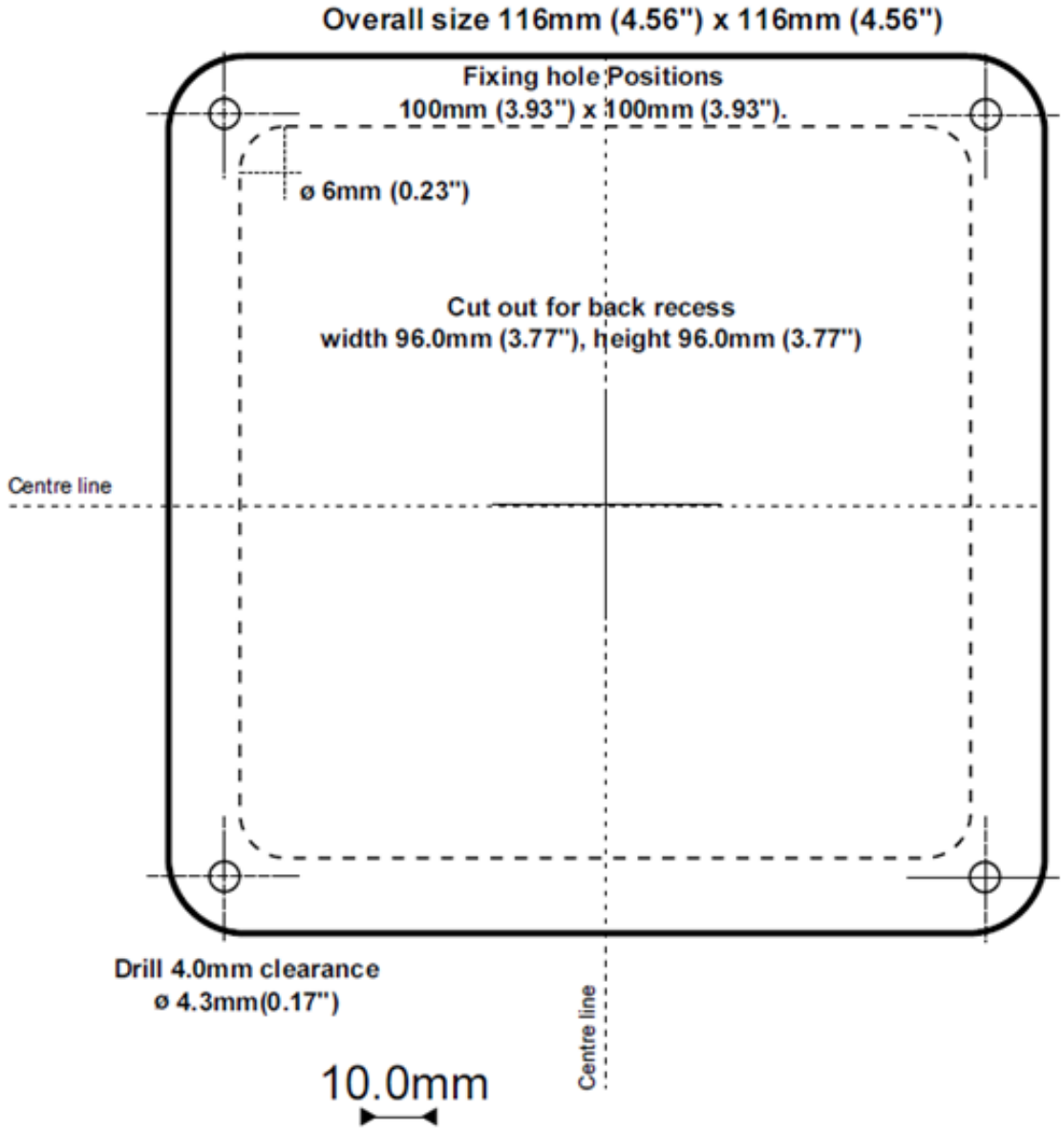

DISPLAY MOUNTING TEMPLATE

PAGE INTENTIONALLY LEFT BLANK

3.0 Introduction

The Seakeeper 5 is shipped with the cooling circuit filled and ready for use. Only a quick confirmation of glycol level is required.

Reference Drawings

90242 Seakeeper 5 Gyro Hardware Scope of Supply

90296 Seakeeper 5 Gyro Cable Block Diagram

90295 Seakeeper 5 Gyro Cooling Water Schematic

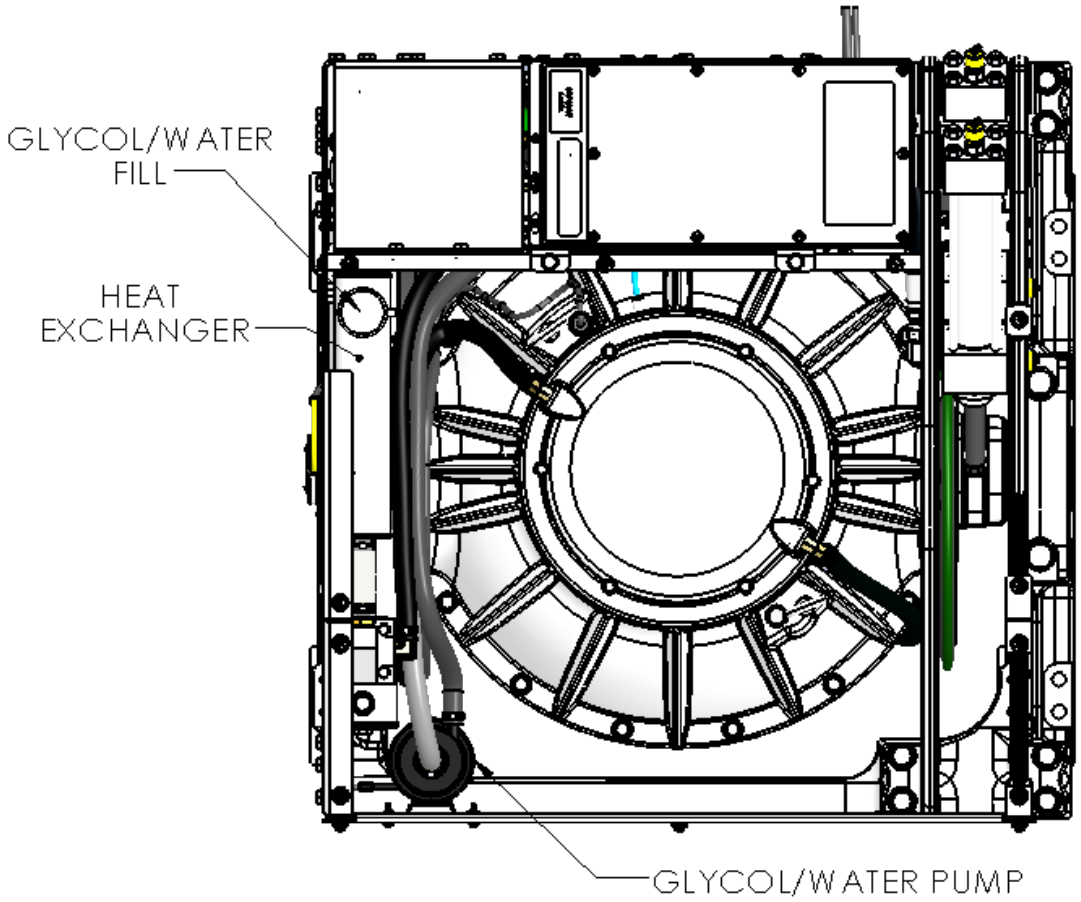

FIGURE 1 – SEAKEEPER 5 GYRO

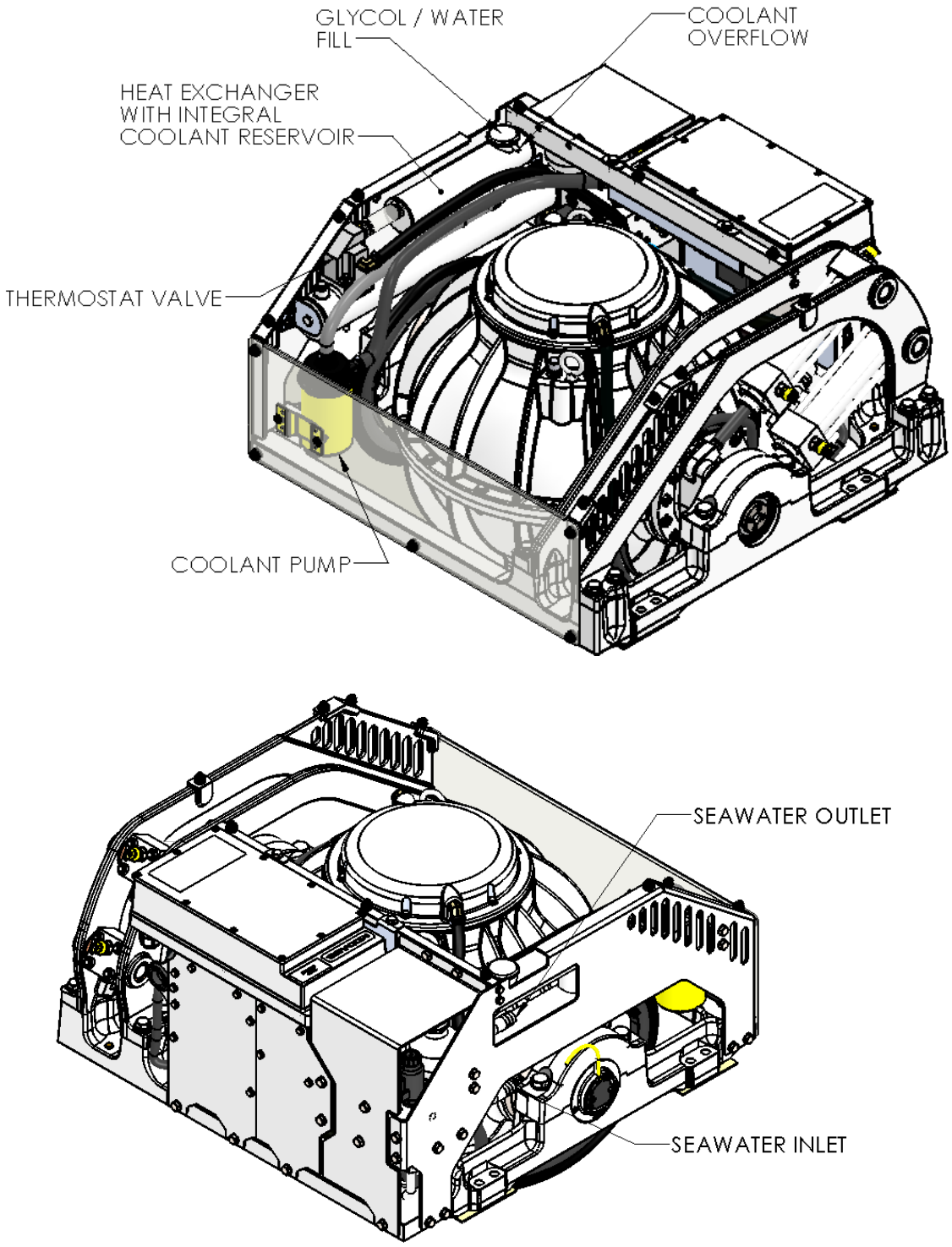

FIGURE 2 – SEAKEEPER 5 GYRO COOLING COMPONENTS

3.1 Precautions

- Installer is responsible for supplying a dedicated sea water pump and associated plumbing. Sea water connections on the gyro heat exchanger mate with ¾ inch (19 mm) hose.
- There is no need to disconnect hose from glycol pump except to replace the pump. In this case, provision will need to be made to catch draining glycol as plumbing is disconnected. Use caution to avoid breaking plastic hose connections on pump casing.
- An output is available from motor drive to power and automatically control seawater pump. This pump must operate on 110-230 VAC single phase and consume less than 5 amps. Pumps requiring other voltages or higher current can still be controlled by using this supply from motor drive to trigger an installer-supplied contactor but a separate source of power must be provided.
- Maximum sea water pressure in heat exchanger is 20 psi (1.4 bar)
- **Seawater flow requirement through heat exchanger is 4 GPM (15.1 LPM) minimum and 8 GPM (30.3 LPM) maximum under all operating conditions of the boat.** When sizing sea water pump, installer should factor in losses for raw water plumbing. In addition to initial operation at dock, new gyro installations should be checked to be within the flow requirements while vessel is at speed. Flows higher than 8 GPM (30.3 LPM) could affect heat exchanger life.

3.2 Adding Coolant

1) Cooling system is filled to proper level when shipped, with a mixture of 50% ethylene glycol and 50% distilled water. Clear tube between thermostat housing and reservoir should be filled with green coolant mixture. If level has dropped, check for evidence of leaks at all connections before adding fluid as described below. If coolant is at the correct level, skip to sea water connection in section 3.3.

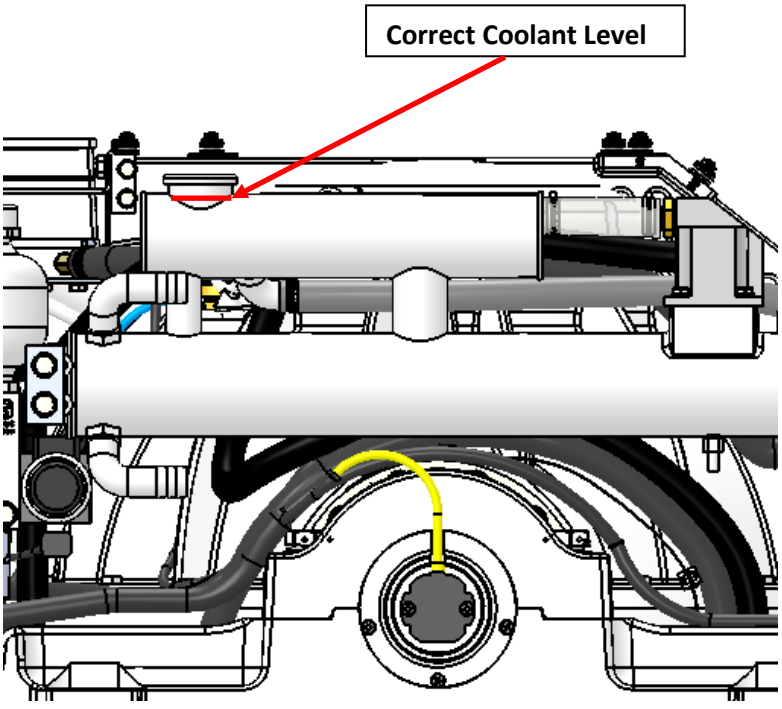

FIGURE 3 – SEAKEEPER 5 COOLANT LEVEL

2) Mix 50% ethylene glycol with 50% distilled water in a clean container. Refer to Table 1 or glycol manufacturer's literature for freezing points.

Table 1: Freezing Point

Ethylene Glycol Solution (*% by volume*)		0	10	20	30	40	50	60
Temperature	*(^{o}F)*	32	23	14	2	-13	-36	-70
	(^{o}C)	0	-3	-8	-16	-25	-37	-55

3) Remove pressure cap on top of reservoir. Pour mixture in until level reaches top of clear tube between thermostatic valve and reservoir as shown in Figure 3. Filling reservoir above this level will not cause any damage but coolant may be expelled from pressure relief port below cap due to normal thermal expansion of coolant.

4) Connect 12 V to controller.

- At the Display check for any ALARMS



- Press the POWER ON/OFF button 
- The flywheel will start to spin and the glycol pump will start.
- Recheck glycol level with fluid circulating in coolant circuit. Sight down inside reservoir and check that coolant level is above upper port on reservoir as shown in Figure 3. Replace cap.
- After several minutes of running, press POWER ON/OFF button  to turn power off to the flywheel and glycol pump. The glycol pump will stop and the flywheel will coast to a stop.

5) The cooling system is self-purging. If small amounts of air are in the system, they will most likely be dislodged during the first sea trial. Recheck level after sea trial and add fluid if required.

3.3 Connecting Seawater to Heat Exchanger

1) Connect seawater from installer supplied pump to lower 3/4" (19 mm) hose barb on heat exchanger. Use the same practices as other below waterline seawater plumbing. Required flow rate is 4 GPM (16 LPM) minimum and 8 GPM (30.3 LPM) maximum.
2) Connect seawater discharge (upper hose barb) to overboard drain. Use the same practices as other below waterline seawater plumbing.
3) In addition to initial operation at dock, new gyro installations should be checked for minimum 4 GPM (16 LPM) flow while vessel is at speed and when backing down. If no other method of confirming flow is available, discharge line may be temporarily diverted to a bucket. Flow is calculated from time to fill a known volume.
4) Inspect raw water plumbing after sea trial for any signs of leakage.
5) Heat exchanger contains removable end-caps to provide access for cleaning the tube bundle.

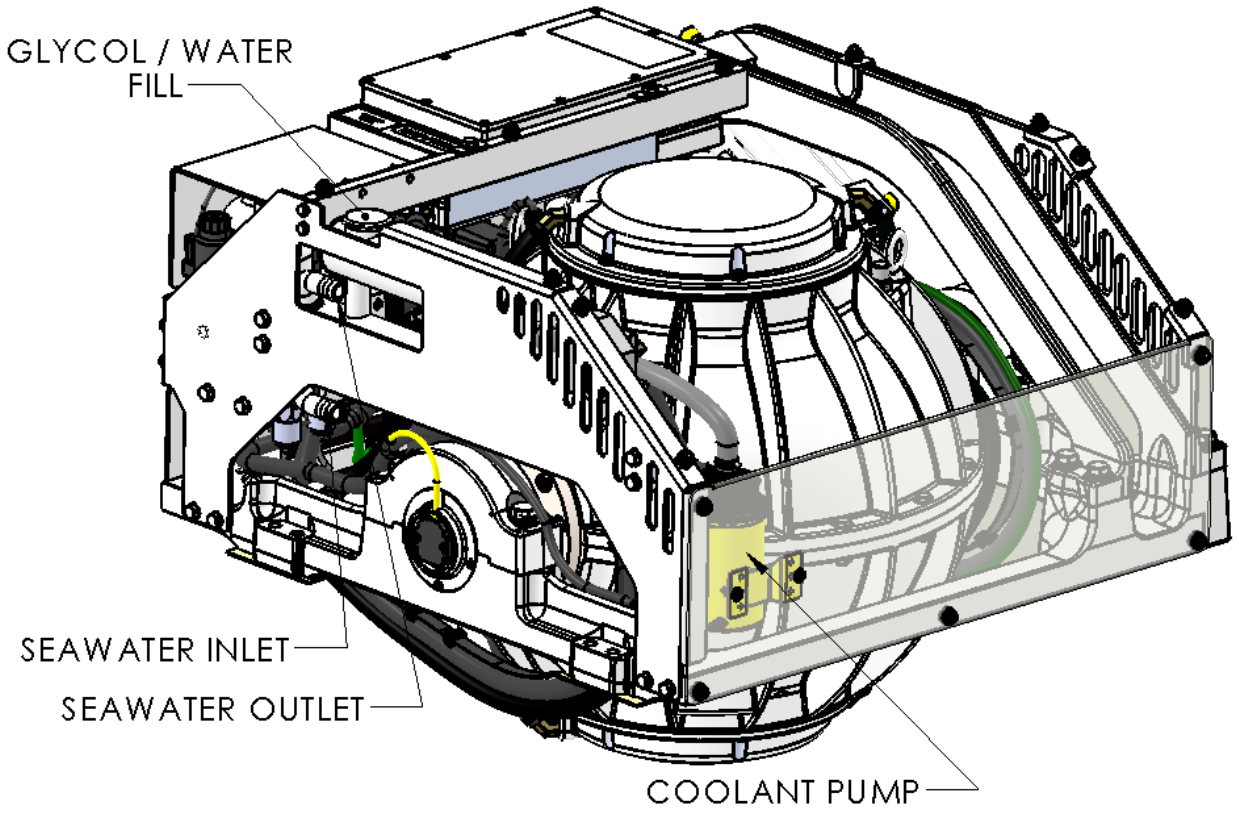

FIGURE 4 – SEAKEEPER 5 SEAWATER CONNECTIONS

PAGE INTENTIONALLY LEFT BLANK

4.0 Introduction

This section describes the first startup of the gyro.

Also reference Seakeeper Document # 90246, Seakeeper 5 Gyro Operation Manual.



- **Previous sections for mechanical, electrical and cooling installation must be completed before this startup sequence is initiated.**
- **Before continuing, covers must be installed and the area around the gyro must be clear of personnel and equipment!**

4.1 Startup Instructions

1) Energize 12 VDC supply at the customer supplied electrical disconnect.

2) Supply 110-230 VAC to Motor Drive Box at customer supplied electrical disconnect.

3) If sea water pump for gyro is not supplied though cable from Motor Drive Box, turn on the boat's AC or DC circuit breaker that supplies power to the sea water pump.

4) With system powered up check the display for any ALARMS. If there are any ALARMS present they must be corrected first.

5) Press the GYRO ON/OFF Button on Display.  The RED LOCK ICON and the PROGRESS BAR will appear and be RED until the GYRO is at speed, then stabilization can begin.

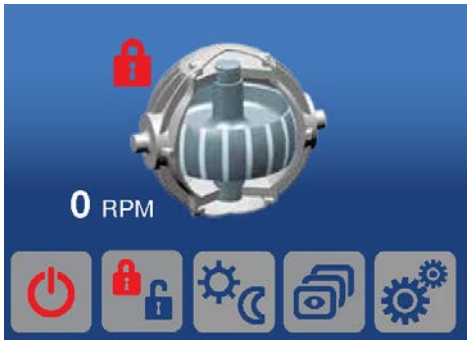



6) The sea water pump should have started when the ON/OFF button on the display was depressed. Confirm pump operation and flow rate, if practical. Required flow is 4 GPM (15 LPM) minimum and 8 GPM (30 LPM) maximum.

7) Verify that there are no ALARMS present. If an ALARM is present it will be displayed.

8) When the PROGRESS BAR turns GREEN from RED the GYRO can be placed in SEA mode. Depress the LOCK/UNLOCK Button  and the GYRO will be free to move and precession can occur.





9) Verify that there are no alarms. If an ALARM is present it will be displayed.

10) Press the LOCK/UNLOCK Button  to go from SEA to LOCK mode. Then press the GYRO ON/OFF Button  to power the GYRO down.

11) During normal operation, the gyro should be stopped when pulling into port and stabilization is no longer required. This maximizes long term life as it allows the gyro to start the coast down cycle before cooling is shutoff. Once the vessel is secured in the slip and the crew has shut down the generator and engines, the AC and DC breakers that control the gyro should be switched to the OFF position. The gyro will continue to spool down to zero rpm. No cooling is required during this time. Note gyro will take 2+ hours to coast down to zero rpm from full speed. When the flywheel has stopped the display will indicate 0 RPM.

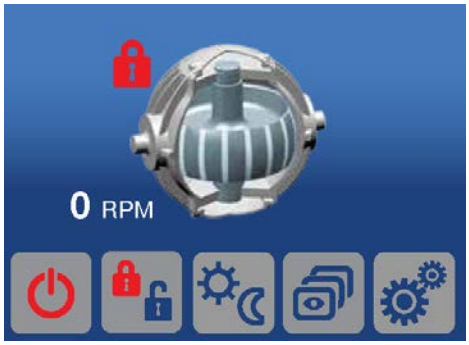

PAGE INTENTIONALLY LEFT BLANK

Please Complete Checklist and E-mail to customerservice@seakeeper.com

or telefax to +1.410.326.1199

5.0 Installation Checklist

Mechanical Checklist (reference Installation Manual Section 1)

- ❑ **Gyro Foundation Installed in Hull**
- ❑ **Foundation bolts torqued to specification**

Electrical Checklist (reference Seakeeper Drawing 90296 & Installation Manual Section 2)

Mount Components

- ❑ **Display (near helm)**

Connect Customer Supplied Cables

- ❑ **Cable 1 (customer supplied)** – **Connect other end of Cable 1 to 12 VDC power at customer supplied connection box or directly to circuit breaker**
- ❑ – **Plug connector of Cable 1 into mating connector on gyro wire harness**
- ❑ **Cable 6 (customer supplied)** – **Install lugs on both ends of customer supplied 4AWG ground cable**
- ❑ – **Connect one end of Cable 6 to nearest vessel ground and other end to gyro rear brace**

Connect Seakeeper Supplied Cables

- ❑ **Cable 2 (Seakeeper supplied)** – **Connect Cable 2 from Drive Box to 110-230 VAC single phase at customer supplied connection box or directly to circuit breaker**
- ❑ **Cable 5 (Seakeeper supplied)** – **Connect Cable 5 from Drive Box to customer supplied 110-230 VAC seawater pump**
- ❑ **Cable 3 (Seakeeper supplied)** – **Connect female end of CAN communications Cable 3 to mating connector on gyro wire harness**

- ❑ – **Route CAN communications Cable 3 from gyro to helm (male end goes to helm)**
- ❑ – **Connect male end of CAN communications Cable 3 at helm to CAN Tee Adapter**
- ❑ – **Connect Display and Seakeeper supplied Cable 4 to CAN Tee Adapter with CAN Terminator**

Cooling Checklist (reference Installation Manual Section 3)

- ❑ **Verify coolant level in heat exchanger coolant reservoir.**
- ❑ **Connect sea water hoses / open sea cocks to heat exchanger and test sea water pump.**
- ❑ **Verify 4 GPM (15 LPM) minimum and 8 GPM (30 LPM) maximum sea water flow through heat exchanger under all operating conditions of the boat.**

Startup Checklist (reference Installation Manual Section 4 and Operation Manual Section 2)

- ❑ **Remove lifting bolts and Install cover panels**
- ❑ **Turn on 12 VDC circuit breaker**
- ❑ **Turn on 110-230 VAC circuit breaker**
- ❑ **Verify display works and no alarms are present**
- ❑ **Follow instructions in Section 4.1 of Installation Manual to turn on the GYRO**
- ❑ **Verify sea water pump turns on when the GYRO is turned ON**
- ❑ **Verify that no ALARMS are present**
- ❑ **Follow instruction in Section 4.1 of Installation Manual to turn off the Gyro**
- ❑ **AC & DC power and sea water pump may be turned off after the GYRO is turned off by placing the GYRO in LOCK mode and Turning the GYRO off**
- ❑ **Gyro takes 2 or more hours to coast down to zero rpm from full speed**

5.1 Required Supplies needed for Gyro Installation (not supplied with gyro)

Item	Description	Qty	Installation Manual Reference Section	Other Reference	System
1	Adhesive and cleaning supplies for bonding to hull		1		Mechanical
2	Soundproofing Considerations		1		Mechanical
3	Spreader bar for lifting gyro		1		Mechanical
4	Hose clamps for seawater plumbing to 3/4" (19 mm) hose barb (2 per hose barb)	4	3		Cooling
5	Cable, 2x14AWG or 2x12AWG, 12 VDC power input to Gyro	AR	2.2.5	Dwg 90296	Electrical
6	M6 terminal lug for grounding gyro at rear brace	1	2.3.1		Electrical
7	Cable, 4AWG, for grounding gyro at rear brace to vessel ground (used with item 5)	AR	2.3.1	Dwg 90296	Electrical
8	Sea water pump, 110-230V AC	1	2.2.3		Electrical
9	Relay for sea water pump control (Not required if using gyro output 110-230V AC pump)	1	2.2.3		Electrical

AR = As Required
Dwg = Drawing

List of common tools that may be required for installation

Item	Description	Use
1	Wire cutter	DC Power, AC Power cables
2	Wire stripper	DC Power, AC Power cables
3	1/8 hex key	Gimbal sensor mount plate
4	2.5 mm hex key	Gimbal angle sensor
5	Slot screwdriver, 5/64 inch	Field assembly connectors
6	1/4 inch nutdriver	Hose clamps
7	Terminal or quick disconnect crimper	Power cables
8	Utility knife	Scoring cable jackets