Product data sheet

Specifications



Safety switch, VisiPacT, heavy duty, fused, viewing window, NEMA 3R, 600V, 200A, 3 pole

VH364R

Product availability: Stock - Normally stocked in distribution facility

Main

Product	Single Throw Safety Switch
Duty Rating	Heavy duty
Device Application	Heavy application
Disconnect Type	Fusible disconnect
Factory Installed Neutral	Field installed kit available
Number of Poles	3
Current Rating	200 A
Voltage Rating	600 V AC/DC
Enclosure Rating	NEMA 3R galvannealed steel
Motor power hp	50 hp at 480 V AC 50-60 Hz for 3 phase motors 125 hp at 480 V AC 50-60 Hz for 3 phase motors 60 hp at 600 V AC 50-60 Hz for 3 phase motors 150 hp at 600 V AC 50-60 Hz for 3 phase motors 40 hp at 250 V DC 50 hp at 600 V DC

Complementary

Short-circuit current	10 kA for H, K, J or R without fuse rejection clips 200 kA for R with fuse rejection clips 200 kA for J
Fuse type	H or K R or J
Mounting Type	Surface
Electrical Connection	Lugs
Wiring configuration	3-wire
Wire Size	AWG 6...250 kcmil copper or aluminium
Tightening torque	275 lbf.in (31.07 N.m) 0.02…0.2 in² (13.3…127 mm²) (AWG 6...250 kcmil)
Depth	8.506 in (216.052 mm)
Width	17.016 in (432.206 mm)
Height	28.94 in (735.08 mm)
Net Weight	55.49 lb(US) (25.17 kg)
Grounding Kit	Field installed kit available
Service Entrance	Suitable service entrance for USA Suitable service entrance for Mexico

Environment

Price is “List Price” and may be subject to a trade discount – check with your local distributor or retailer for actual price.

Disclaimer: This documentation is not intended as a substitute for and is not to be used for determining suitability or reliability of these products for specific user applications

Certifications	UL listed file E2875
Standards	UL98 CSA C22.2 No 4 NOM-003-SCFI-2000

Ordering and shipping details

Category	US10DE100009
Discount Schedule	0DE1
GTIN	3606485894355
Returnability	Yes
Country of origin	US

Packing Units

Unit Type of Package 1	PCE
Nbr. of units in pkg.	1
Package 1 Height	9.50 in (24.130 cm)
Package 1 Width	19.80 in (50.292 cm)
Package 1 Length	31.30 in (79.502 cm)
Package weight(Lbs)	47.0004 lb(US) (21.319 kg)
Unit Type of Package 2	PAL
Number of Units in Package 2	8
Package 2 Height	38.52 in (97.841 cm)
Package 2 Width	40.00 in (101.600 cm)
Package 2 Length	48.00 in (121.920 cm)
Package 2 Weight	381.0010 lb(US) (172.819 kg)

Environmental Data

Schneider Electric aims to achieve Net Zero status by 2050 through supply chain partnerships, lower impact materials, and circularity via our ongoing “Use Better, Use Longer, Use Again” campaign to extend product lifetimes and recyclability.

Environmental Data explained >

How we assess product sustainability >

Environmental footprint

Carbon footprint (kg CO2 eq, Total Life cycle)	272
Environmental Disclosure	Product Environmental Profile

Use Better

Materials and Substances

Packaging made with recycled cardboard	Yes
Packaging without single use plastic	Yes
EU RoHS Directive	Compliant
REACh Regulation	REACh Declaration
California proposition 65	WARNING: This product can expose you to chemicals including: Lead and lead compounds, which is known to the State of California to cause cancer and birth defects or other reproductive harm. For more information go to www.P65Warnings.ca.gov

Use Again

Repack and remanufacture

Circularity Profile	No need of specific recycling operations
Take-back	No

Technical Illustration

Dimensions

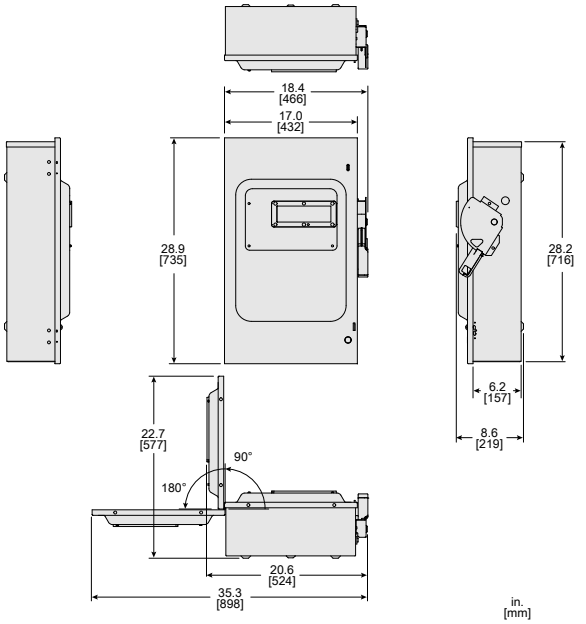

ALL DIMENSIONS ARE APPROXIMATE.
REFER TO TECHNICAL DRAWINGS AND DOCUMENTATION FOR COMPLETE INFORMATION.

Technical Illustration

Wiring diagram

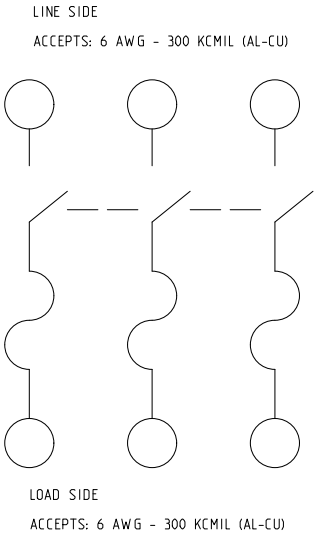

CATALOG NO. VH364R
REFER TO TECHNICAL DRAWINGS AND DOCUMENTATION FOR COMPLETE INFORMATION.