AM-703…6, 708

Actuator Accessories for Schneider Electric Proportional SmartX Actuators

Applications

The AM-703 span adjustment module changes non-standard current and voltage signals into a 2 to 10 Vdc signal.

The AM-704 modulation interface converts signal input from a pulse-width modulated input signal to an analog 2 to 10 Vdc signal.

The AM-705 and AM-706 positioners are used for remotely controlling proportional actuators. The AM-705 is for surface mounting. The AM-706 is for flush mounting.

The AM-708 500 ohm resistor converts a 4 to 20 mA signal to a 2 to 10 Vdc signal.

Features

AM-703
- Zero offset of 0 to 18 Vdc
- Span range of 2.6 to 17 Vdc
- Will accept 4 to 20 mA signal

AM-704
- Four input pulse clock rates
- Optically isolated input signal
- Linear analog output has 256 steps of resolution
- Diagnostic LEDs

AM-705 and AM-706
- Control range is 0 to 100% of the actuator rotation angle
- Control signal is switchable from 0 to 10 Vdc to 2 to 10 Vdc
- AM-705 is surface mount, AM-706 is flush mount

AM-708
- Hook up wires are pre-stripped
- Resistor is covered with shrink-wrap tubing

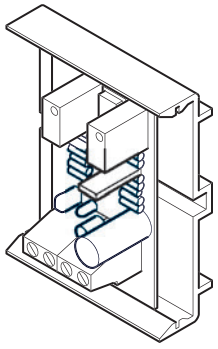

AM-703

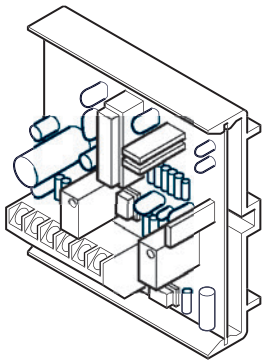

AM-704

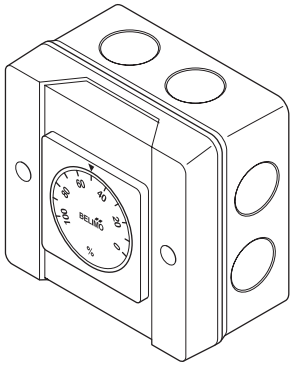

AM-705

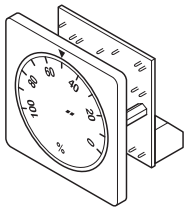

AM-706

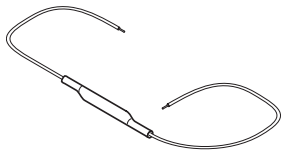

AM-708

© 2017 Schneider Electric. All rights reserved. All trademarks are owned by Schneider Electric Industries SAS or its affiliated companies.
Document Number: F-26895-5

August 2, 2017 10:39 AM tc

Applicable Literature

F-Number	Description	Audience	Purpose
F-26645	MS40-7043Series, MS4x-7073 Series, MS4x-7153 Series Spring Return Proportional SmartX Actuator General Instructions	– Sales Personnel – Application Engineers – Installers – Service Personnel – Start-up Technicians	– Describes the actuator's features, specifications, and possible applications. Provides step-by-step mounting instructions.
F-27214	MS41-6043, MS41-6083 Series Non-Spring Return Direct Coupled SmartX Actuator General instructions		
F-26748	MS40-717x Series Spring Return Direct Coupled SmartX Actuator General instructions		
F-26646	Mx4x-6xxx, Mx4x-7xxx Series SmartX Actuator Selection Guide		

Specifications

AM-703	Power Supply	Supply Voltage:	24 Vac ± 15% 24 Vdc ± 15%
	Power Consumption	<1 Watt	
	Transformer Sizing	1 VA	
	Input Voltage:	Max voltage: zero (starting point) Span adjustment: Impedence: 0 to 20 mA Impedence:	25 Vdc 0 to 18 Vdc 2.6 to 17 Vdc 400 Ω 500 Ω
	Output	Voltage: Current:	2 to 10 Vdc 15 mA max
	Electrical Connection	Wire terminals, 14 gauge max.	
	Ambient temperature	-20 F to 150°F (-30 to 65° C)	
	Humidity	5 to 95% RH non-condensing	
	Mounting	Snap-Track (provided)	
	Dimensions	Board: W/ snap-track	1-3/16" x 2-3/16" x 9/16" 1-7/8" x 2-3/8" x 15/16"
	Weight	0.9 oz.	

© 2017 Schneider Electric. All rights reserved. All trademarks are owned by Schneider Electric Industries SAS or its affiliated companies.

AM-704	Power Supply	Supply Voltage:	24 Vac ± 15% 24 Vdc ± 15%
	Power Consumption	<1 Watt	
	Transformer Sizing	2 VA	
	Input		
	-Isolation	Optically isolated (when wired as such)	
	-Type	Normal or triac, jumper selectable	
	-Trigger level	12 to 24 Vac/Vdc or dry contact to com	
	-time between trigger pulses	12.5 milliseconds minimum	
	-Impedance		
	-Pulse duration/resolution	Vac - 500 Ω, Vdc - 10 Ω	
	-Range 1	Four selectable ranges, in seconds or dry contact or SSR	
	-Range 2	closure ± 40% of signal increment	
	-Range 3	0.0235 to 6 seconds/in 0.0235 sec increments	
	-Range 4	0.0196 to 5 seconds in 0.0196 sec increments	
		0.1 to 25.5 seconds/ in 0.100 sec increments	
		0.59 to 2.93 seconds/ in 0.0092 sec increments	
	Output	Voltage:	2 to 10 Vdc
		Current:	15 mA max
		Accuracy:	± 2%
	Electrical Connection	Wire terminals, 14 gauge max.	
	Ambient temperature	-20 to 150°F (-30 to 65° C)	
	Operating Humidity	5 to 95% RH non-condensing	
	Mounting	Snap-Track (provided)	
	Dimensions	Board:	2-3/16” x 2-3/16” x 9/16”
		W/ snap-track	2-3/8” x 2-1/4” x 15/16”
	Weight	1.5 oz.	
AM-705, AM-706	Power Supply	24 Vac ± 20%, 50/60 Hz, 24 Vdc ± 10%	
	Transformer Sizing	1 VA	
	Control Signal Y	0 to 10 Vdc, 2 to 10 Vdc (switchable)	
	Power Output	Up to 10 actuators (1 mA max)	
	Degree of Protection	AM-705 only NEMA 4 (IP54)	
	Connection	Terminals (14 gauge wire max)	
	Humidity	5 to 95% RH non-condensing	
AM-708	Resistance	500 Ω	
	Length	9”	

© 2017 Schneider Electric. All rights reserved. All trademarks are owned by Schneider Electric Industries SAS or its affiliated companies.

Installation

AM-703

Set the circuit board jumper to fit the application.

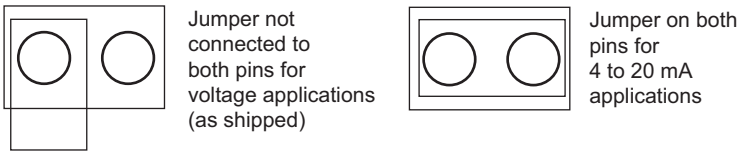

Figure-1 Jumper Settings.

The AM-703 may also be used to sequence several actuators from one signal source. This is done by adjusting multiple modules to work at different input ranges. (Example: 2 to 5 Vdc, 5 to 8 Vdc, 8 to 11 Vdc, etc.)

Calibration

1. Attach a variable signal source to the AM-703 input and power wires.
2. Apply power.
3. Input the minimum signal level.
4. Adjust the offset potentiometer to produce a 2 Vdc signal at the output. A clockwise rotation of the potentiometer screw will increase the output signal. See Figure-2.
5. Input the maximum signal level.
6. Adjust the span adjustment to produce a 10 Vdc signal at the output. A clockwise rotation of the potentiometer screw will increase the output signal. See Figure-2.
7. Double check the input-output calibration and install.

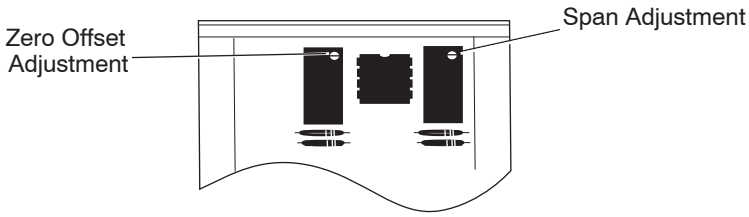

Figure-2 Calibration Adjustments.

AM-704

1. Set the input pulse timing jumpers.

Position	Clock Rate
Range 1	0.0235 to 6 seconds in 0.0235 sec. increments
Range 2	0.0196 to 5 seconds in 0.0196 sec. increments
Range 3	0.1 to 25.5 seconds in 0.100 sec. increments
Range 4	0.59 to 2.93 seconds in 0.0092 sec. increments

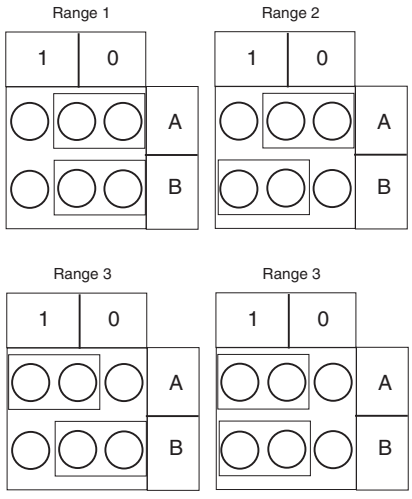

Figure-3 Timing Jumper Settings.

© 2017 Schneider Electric. All rights reserved. All trademarks are owned by Schneider Electric Industries SAS or its affiliated companies.
Document Number: F-26895-5

2. Set input jumper for normal or triac.

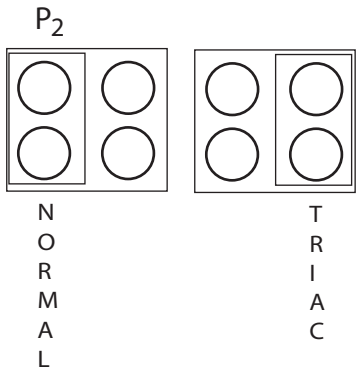

Figure-4 Input Jumper Settings.

Note:

Do not move the adjustment screws for zero and span.

AM-705

1. Remove the two screws from the front cover.
2. Remove the front cover and position rear cover for mounting.

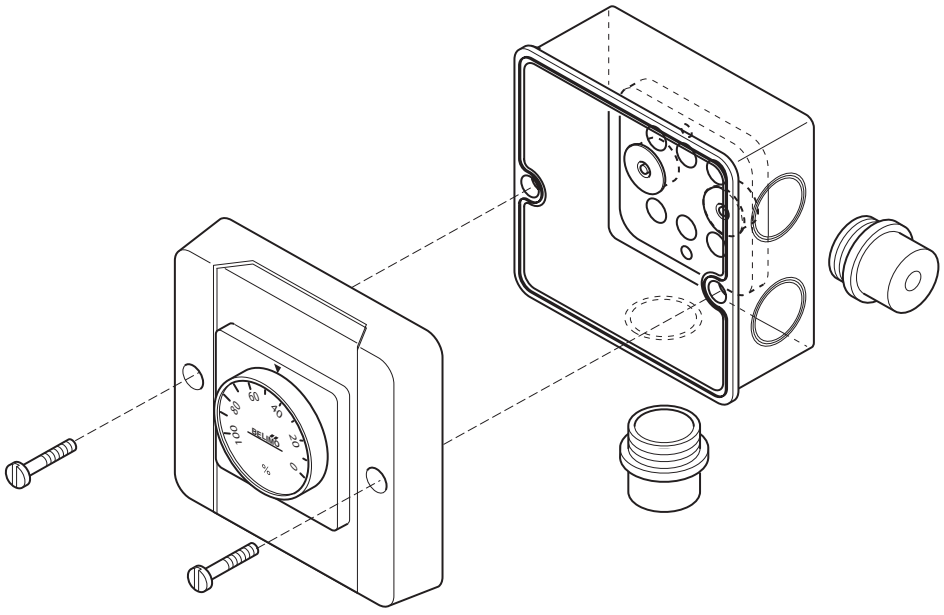

Figure-5 AM-705 Mounting.

3. Use two mounting screws (customer supplied) and appropriate drill to drill and mount the rear cover (Figure-6).
4. Punch out a plug to route wiring into box. Two screw-in caps are provided.
5. Connect wires (Figure-13) and set output switch to either 2 to 10 Vdc or 0 to 10 Vdc (Figure-8).
6. Secure front cover with screws removed in step one.

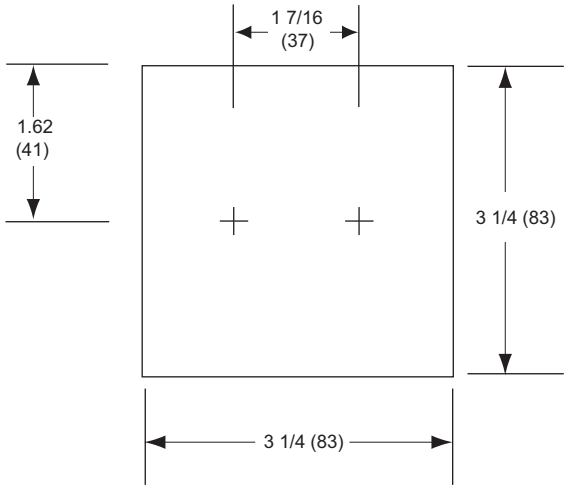

Figure-6 AM-705 Mounting Dimensions.

AM-706

To mount the AM-706 positioner use the following dimensions:

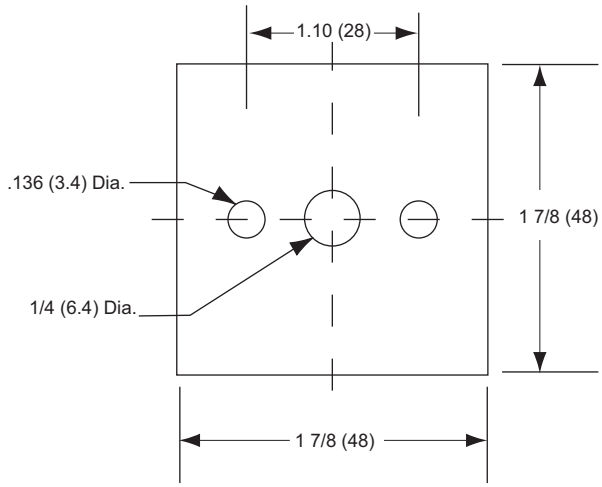

Figure-7 AM-706 Mounting Dimensions.

1. Drill the three holes (Figure-7).
2. Set the output to 2 to 10 Vdc or 0 to 10 Vdc (Figure-8).

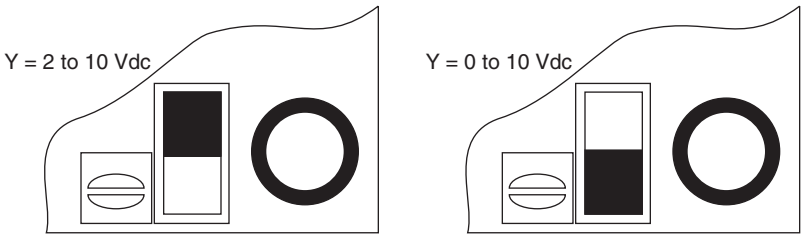

Figure-8 AM-706 Output Switch Settings.

© 2017 Schneider Electric. All rights reserved. All trademarks are owned by Schneider Electric Industries SAS or its affiliated companies.

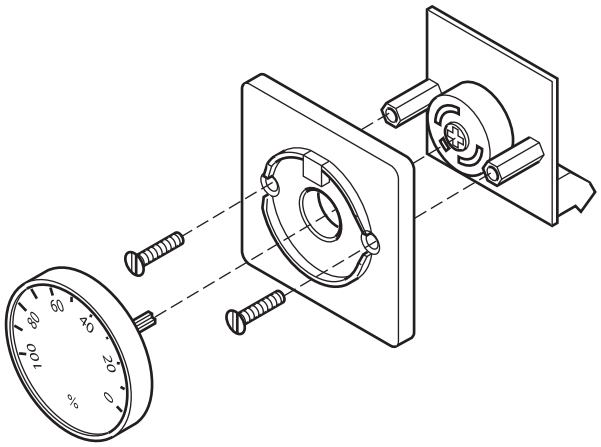

Figure-9 AM-706 Mounting.

3. Rotate the dial until the percent sign is at the bottom. Pry the dial out with a flat screwdriver. A slot at the top of the dial is provided.
4. Remove the two screws from the front cover plate and separate the cover from the circuit board (Figure-9).
5. Position the circuit board behind the mounting surface. The wire screw terminals should be at the bottom.
6. Position the front cover plate and secure it to the circuit board with the two screws removed in step 4.

Note:
The dial has a sealing O-ring for moisture resistance. A thin gasket may be placed between the front cover plate and the mounting surface.

7. Connect wires (Figure-13).

AM-708

The wires of the AM-708 can be attached using whatever means is acceptable to the application. This includes: wire nuts, soldering, crimp connections and screw terminals.

© 2017 Schneider Electric. All rights reserved. All trademarks are owned by Schneider Electric Industries SAS or its affiliated companies.

Wiring Diagrams

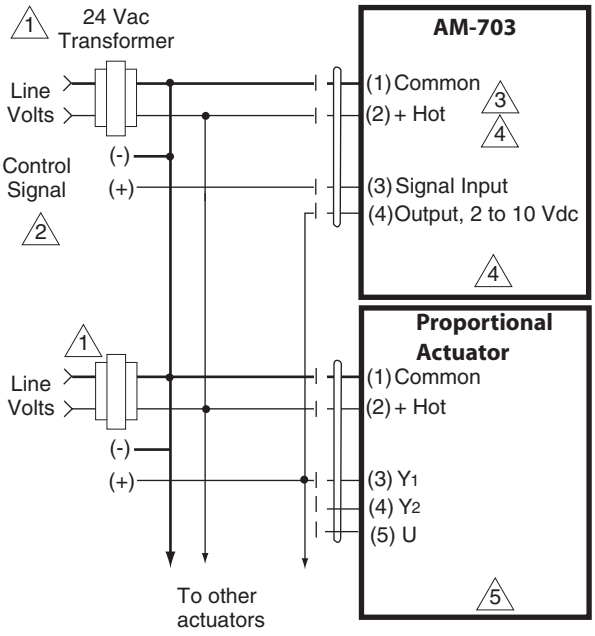

1. Provide overload protection and disconnect as required.
2. The controller should be powered from a separate transformer
3. the actuator and AM-703 may be powered from the same transformer.
4. Consult controller instruction manual for more detailed installation information.
5. To reverse control rotation, use the reversing switch.

Figure-10 AM-703 Wiring Diagram.

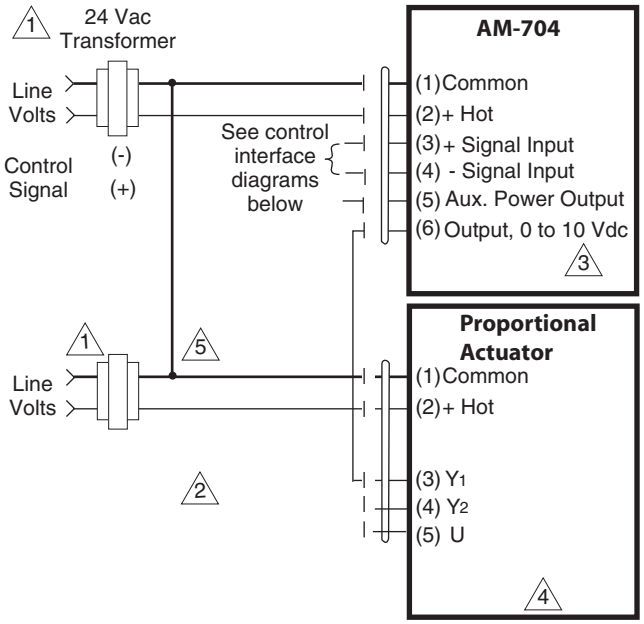

1. Provide overload protection and disconnect as required.
2. The actuator and controller must have separate transformers
3. Consult controller instruction manual for more detailed installation information.
4. The actuator and AM-704 may be powered from the same transformer.
5. To reverse control rotation, use the reversing switch.

Figure-11 AM-704 Wiring Diagram.

© 2017 Schneider Electric. All rights reserved. All trademarks are owned by Schneider Electric Industries SAS or its affiliated companies.

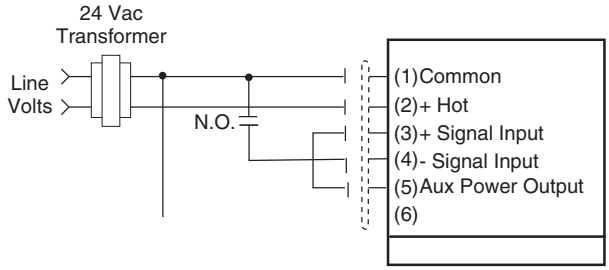

Relay pulsed pulsed signal (non-isolated circuit)

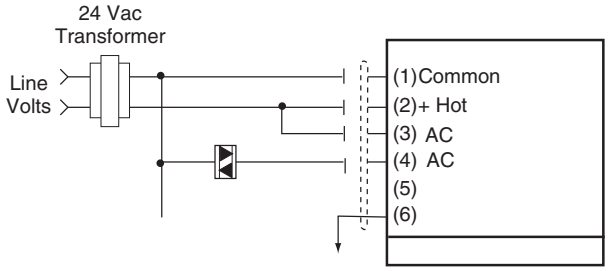

Triac, Common pulsed signal (non-isolated circuit)

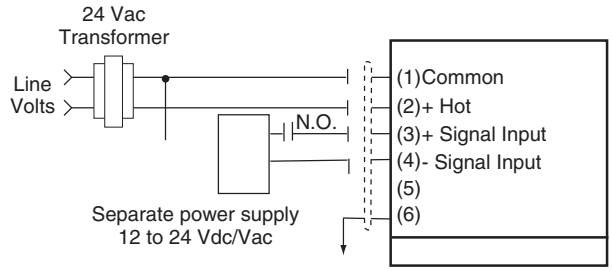

Relay pulsed pulsed signal (isolated circuit)

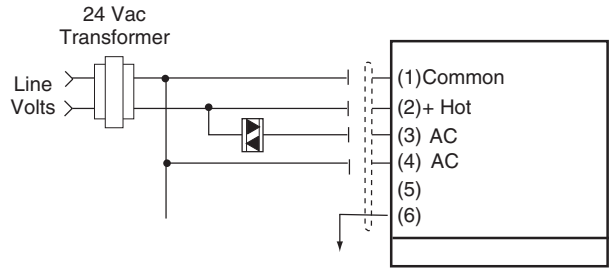

Triac, hot pulsed signal (non-isolated circuit)

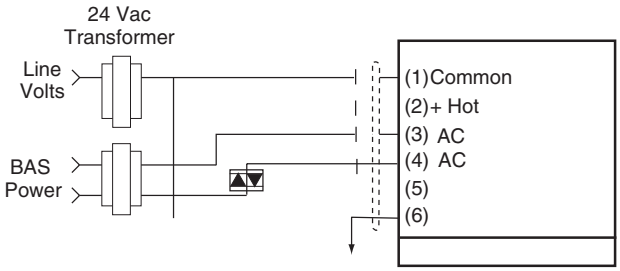

Triac, pulsed signal (isolated circuit)

Figure-12 AM-704 Control Interface.

© 2017 Schneider Electric. All rights reserved. All trademarks are owned by Schneider Electric Industries SAS or its affiliated companies.

Dimensions

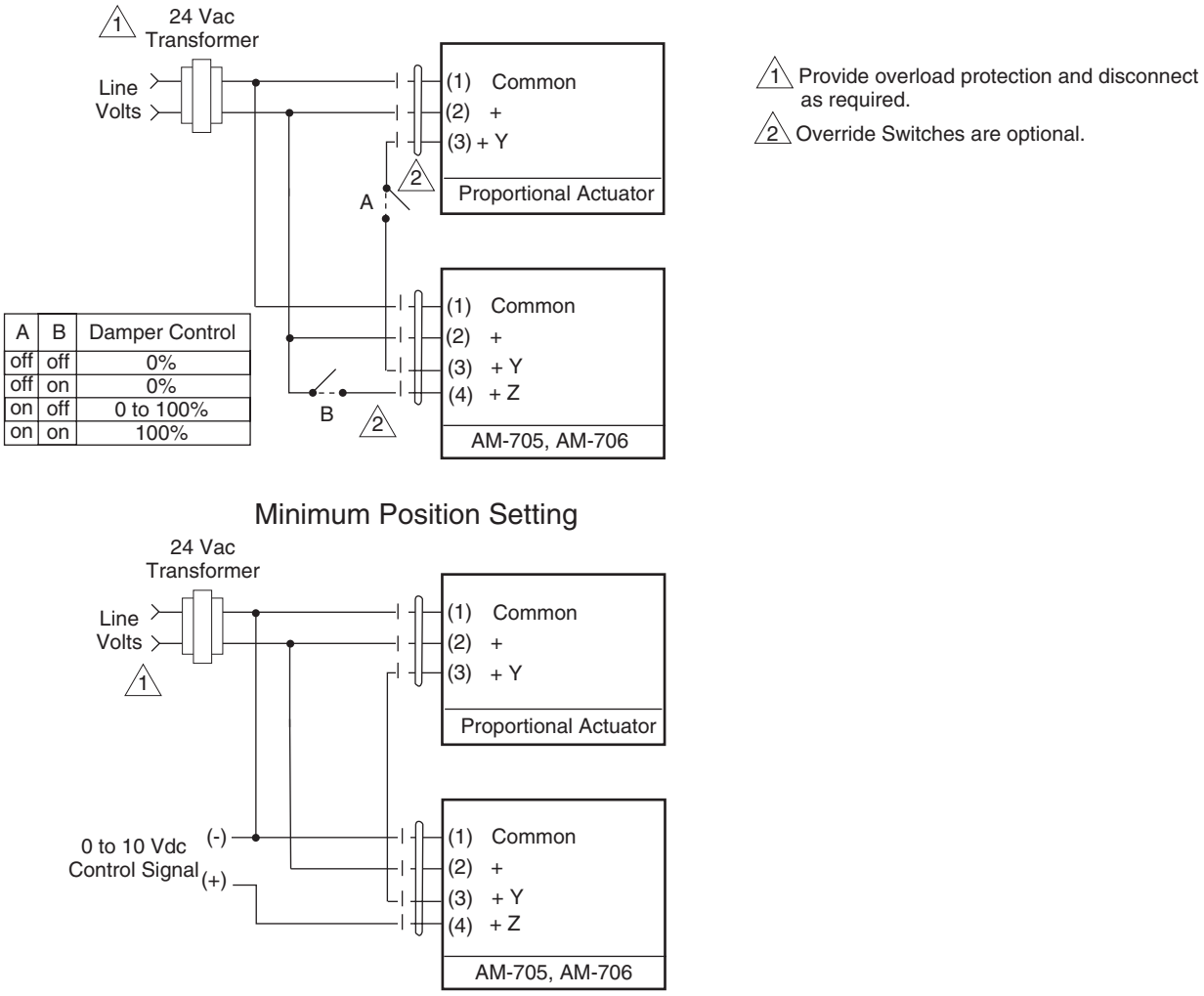

Figure-13 AM-705 and AM-706 Wiring Diagram.

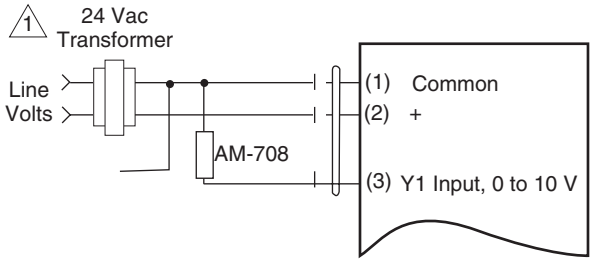

Figure-14 AM-708 Wiring Diagram.

© 2017 Schneider Electric. All rights reserved. All trademarks are owned by Schneider Electric Industries SAS or its affiliated companies.

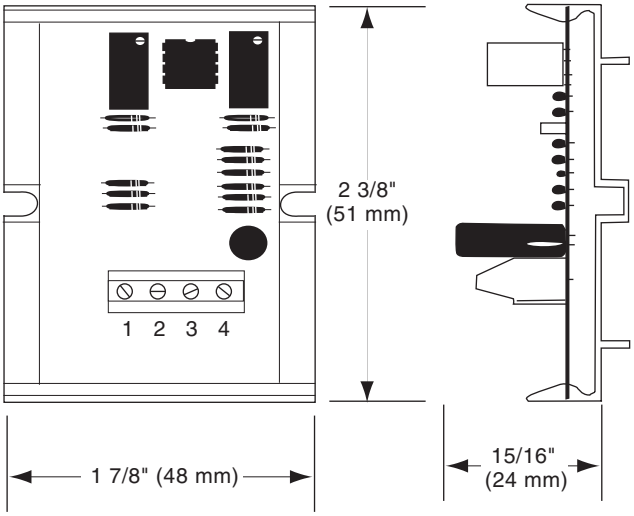

Figure-15 AM-703 Dimensions.

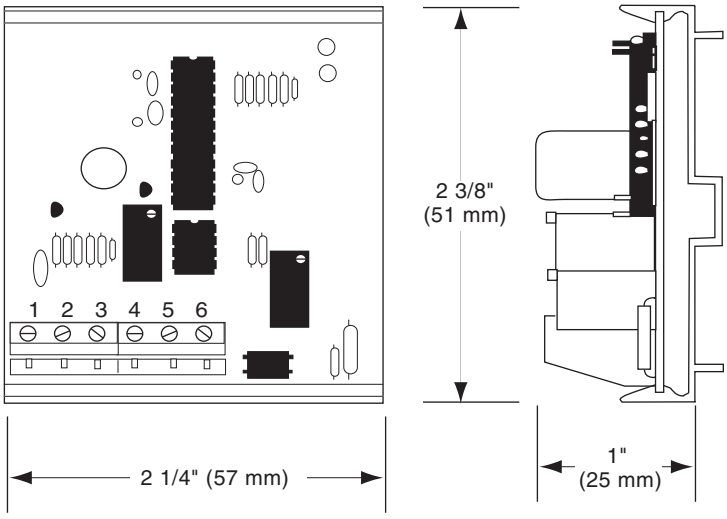

Figure-16 AM-704 Dimensions.

© 2017 Schneider Electric. All rights reserved. All trademarks are owned by Schneider Electric Industries SAS or its affiliated companies.

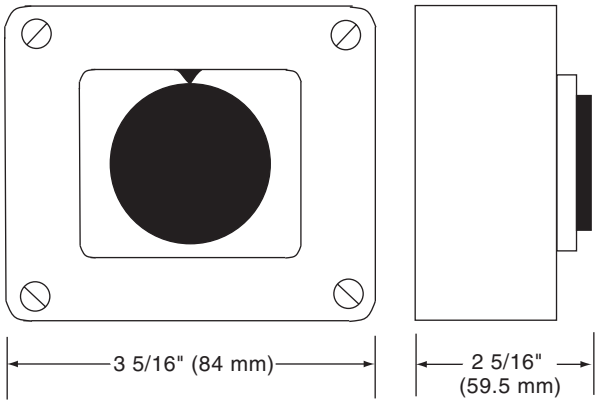

Figure-17 AM-705 Dimensions.

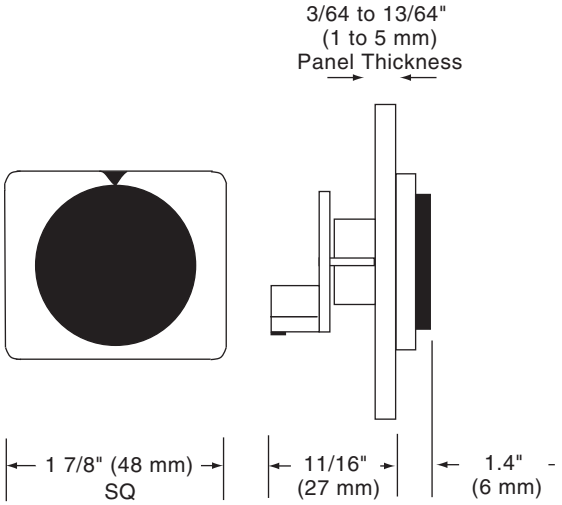

Figure-18 AM-706 Dimensions.



Figure-19 AM-708 Dimensions.

© 2017 Schneider Electric. All rights reserved. All trademarks are owned by Schneider Electric Industries SAS or its affiliated companies.