BOBBIN-WOUND FILTER BK1 SERIES

THE EXTRA PERFORMANCE UNDER HARD CONDITIONS

- Sand
- Bobbin-wound filter
- Residential **up to 180 m³**
- Side Version
- 4 skus **from 10 to 32 m³/h**
- Valve included
- Stability
- Resistant
- Bolted cover



MADE IN EU

PRO LINE

10 YEARS OF WARRANTY TANK

3 YEARS OF WARRANTY EQUIPMENT

- Long-lasting **bobbin wound technology** allows high pressures rates
- **Reliable under the most exigent environments**
- **Transparent wide cover for easy maintenance**
- Includes 6-way Vari-Flo™ valve
- Application: **for residential or semi-commercial pools**

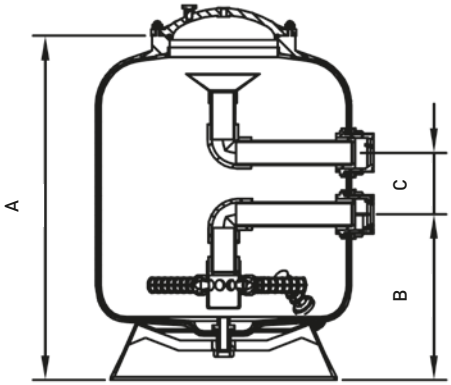



Transparent wide cover

Item	Ref.	Flow rate	Diameter ø	In/ Out	Filtration area	Empty weight	Sand	Vitrafil	Dimensions			Pallet qty.	Replacement valves
									A	B	C		
026005215161	BK1-500	10 m³/h	500 mm	1.5"	0.19 m²	22 kg	100 kg	80 kg	700 mm	337 mm	125 mm	2	Valve: SP0643SKR-LP Connections: 500200061200
026006215161	BK1-600	14 m³/h	600 mm	1.5"	0.28 m²	24 kg	150 kg	120 kg	800 mm	382 mm	125 mm	2	
026007220161	BK1-750	21 m³/h	750 mm	2"	0.44 m²	29 kg	275 kg	220 kg	865 mm	397 mm	141 mm	2	Valve: SP0663SKR-LP Connections: 500200061300
026009020161	BK1-900	32 m³/h	900 mm	2"	0.63 m²	64 kg	450 kg	360 kg	950 mm	435 mm	141 mm	1	

Technical Specifications	
Max. water temp.	50º C
Operating pressure	0.5 – 1.5 kg/cm²
Max pressure	2.5 kg/cm²
Test pressure	3.75 bar
Filtration speed	50 m³/h/m²
Tank / Laterals / Unions / Cover	Polyester+FG/ABS/ABS/PC
Granulometry of filter media	0.4 – 0.8 mm