PIONEER
The Art of Entertainment

Service Manual

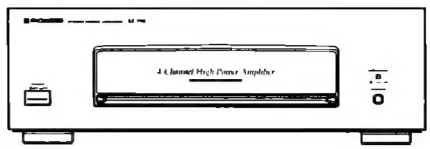

ORDER NO.
RRV1465

STEREO POWER AMPLIFIER

M-790

THIS MANUAL IS APPLICABLE TO THE FOLLOWING MODEL(S) AND TYPE(S).

Type	Model	Power Requirement	Remarks
	M-790		
KUXJ	O	AC120V	
KCXJ	O	AC120V	

- **This product is a system(s) component.**
  This product does not function properly when independent; to avoid malfunctions, be sure to connect it to the prescribed system component(s), otherwise damage may result.

CONTENTS

1. SAFETY INFORMATION 2
2. PACKING, EXPLODED VIEWS AND PARTS LIST 3
3. SCHEMATIC AND PCB CONNECTION DIAGRAMS ... 8
4. PCB PARTS LIST 23
5. ADJUSTMENTS 26
6. HOW TO CHECK M-790 30
7. BLOCK DIAGRAM 31
8. PANEL FACILITIES 32
9. SPECIFICATIONS 32

PIONEER ELECTRONIC CORPORATION 4-1, Meguro 1-Chome, Meguro-ku, Tokyo 153, Japan
PIONEER ELECTRONICS SERVICE, INC. P.O.Box 1760, Long Beach, CA 90801-1760, U.S.A.
PIONEER ELECTRONIC [EUROPE] N.V. Haven 1087, Keetberglaan 1, 9120 Melsele, Belgium
PIONEER ELECTRONICS ASIACENTRE PTE. LTD. 501 Orchard Road, #10-00 Lane Crawford Place, Singapore 0923

© PIONEER ELECTRONIC CORPORATION 1996

T-FFB JAN. 1996 Printed in Japan

1. SAFETY INFORMATION

This service manual is intended for qualified service technicians; it is not meant for the casual do-it-yourselfer. Qualified technicians have the necessary test equipment and tools, and have been trained to properly and safely repair complex products such as those covered by this manual.
Improperly performed repairs can adversely affect the safety and reliability of the product and may void the warranty. If you are not qualified to perform the repair of this product properly and safely, you should not risk trying to do so and refer the repair to a qualified service technician.

WARNING

Lead in solder used in this product is listed by the California Health and Welfare agency as a known reproductive toxicant which may cause birth defects or other reproductive harm (California Health & Safety Code, Section 25249.5).
When servicing or handling circuit boards and other components which contain lead in solder, avoid unprotected skin contact with the solder. Also, when soldering do not inhale any smoke or fumes produced.

NOTICE
(FOR CANADIAN MODEL ONLY)
Fuse symbols (fast operating fuse) and/or (slow operating fuse) on PCB indicate that replacement parts must be of identical designation.

REMARQUE
(POUR MODÈLE CANADIEN SEULEMENT)
Les symboles de fusible (fusible de type rapide) et/ou (fusible de type lent) sur CCI indiquent que les pièces de remplacement doivent avoir la même désignation.

(FOR USA MODEL ONLY)

1. SAFETY PRECAUTIONS

The following check should be performed for the continued protection of the customer and service technician.

LEAKAGE CURRENT CHECK

Measure leakage current to a known earth ground (water pipe, conduit, etc.) by connecting a leakage current tester such as Simpson Model 229-2 or equivalent between the earth ground and all exposed metal parts of the appliance (input/output terminals, screwheads, metal overlays, control shaft, etc.). Plug the AC line cord of the appliance directly into a 120V AC 60Hz outlet and turn the AC power switch on. Any current measured must not exceed 0.5mA.

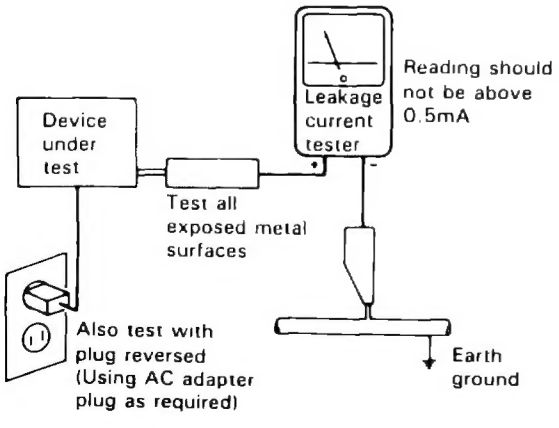

AC Leakage Test

ANY MEASUREMENTS NOT WITHIN THE LIMITS OUTLINED ABOVE ARE INDICATIVE OF A POTENTIAL SHOCK HAZARD AND MUST BE CORRECTED BEFORE RETURNING THE APPLIANCE TO THE CUSTOMER.

2. PRODUCT SAFETY NOTICE

Many electrical and mechanical parts in the appliance have special safety related characteristics. These are often not evident from visual inspection nor the protection afforded by them necessarily can be obtained by using replacement components rated for voltage, wattage, etc. Replacement parts which have these special safety characteristics are identified in this Service Manual.

Electrical components having such features are identified by marking with a ⚠ on the schematics and on the parts list in this Service Manual.
The use of a substitute replacement component which dose not have the same safety characteristics as the PIONEER recommended replacement one, shown in the parts list in this Service Manual, may create shock, fire, or other hazards.

Product Safety is continuously under review and new instructions are issued from time to time. For the latest information, always consult the current PIONEER Service Manual. A subscription to, or additional copies of, PIONEER Service Manual may be obtained at a nominal charge from PIONEER.

2. PACKING, EXPLODED VIEWS AND PARTS LIST

NOTES:

- *Parts marked by "NSP" are generally unavailable because they are not in our Master Spare Parts List.*
- *The ⚠ mark found on some component parts indicates the importance of the safety factor of the part. Therefore, when replacing, be sure to use parts of identical designation.*
- *Parts marked by "◉" are not always kept in stock. Their delivery time may be longer than usual or they may be unavailable.*

2.1 PACKING

Parts List

Mark	No.	Description	Parts No.
NSP	1	WARRANTY CARD (KUXJ TYPE ONLY)	ARY1051
NSP	1	WARRANTY CARD (KCXJ TYPE ONLY)	ARY1075
	2	OPERATING INSTRUCTIONS (ENGLISH)	RRB1167
	3	OPERATING INSTRUCTIONS (FRENCH)(KCXJ TYPE ONLY)	RRC1005
NSP	4	POLYETHYLENE BAG	AHG1202
	5	PACKING SHEET	AHG7008
	6	REAR PAD	AHA1666
	7	FRONT PAD	AHA1665
	8	PACKING CASE	RHG1708

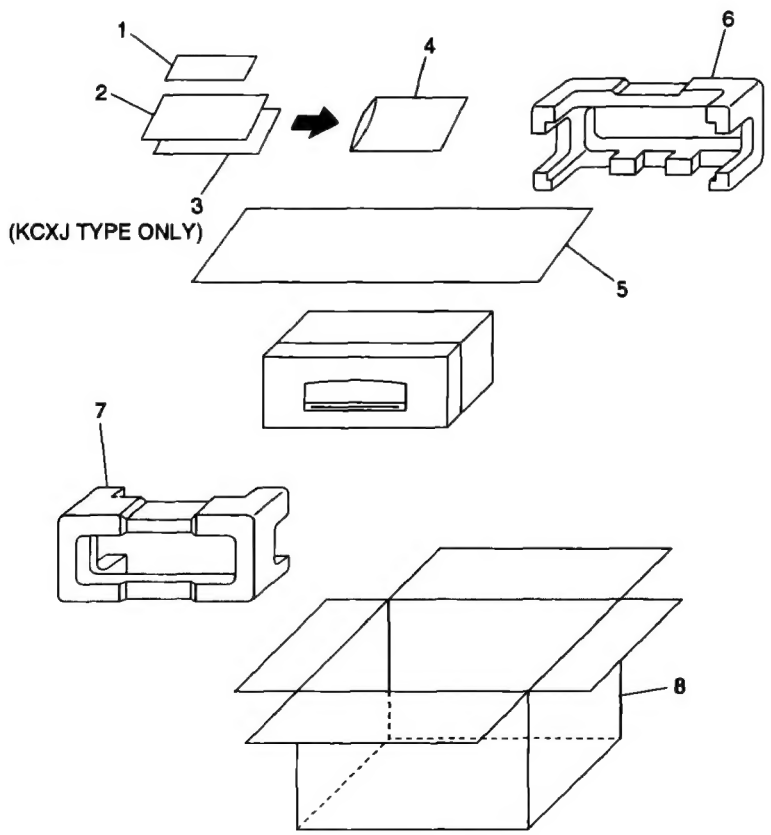

2.2 POWER AMP. UNIT SECTION

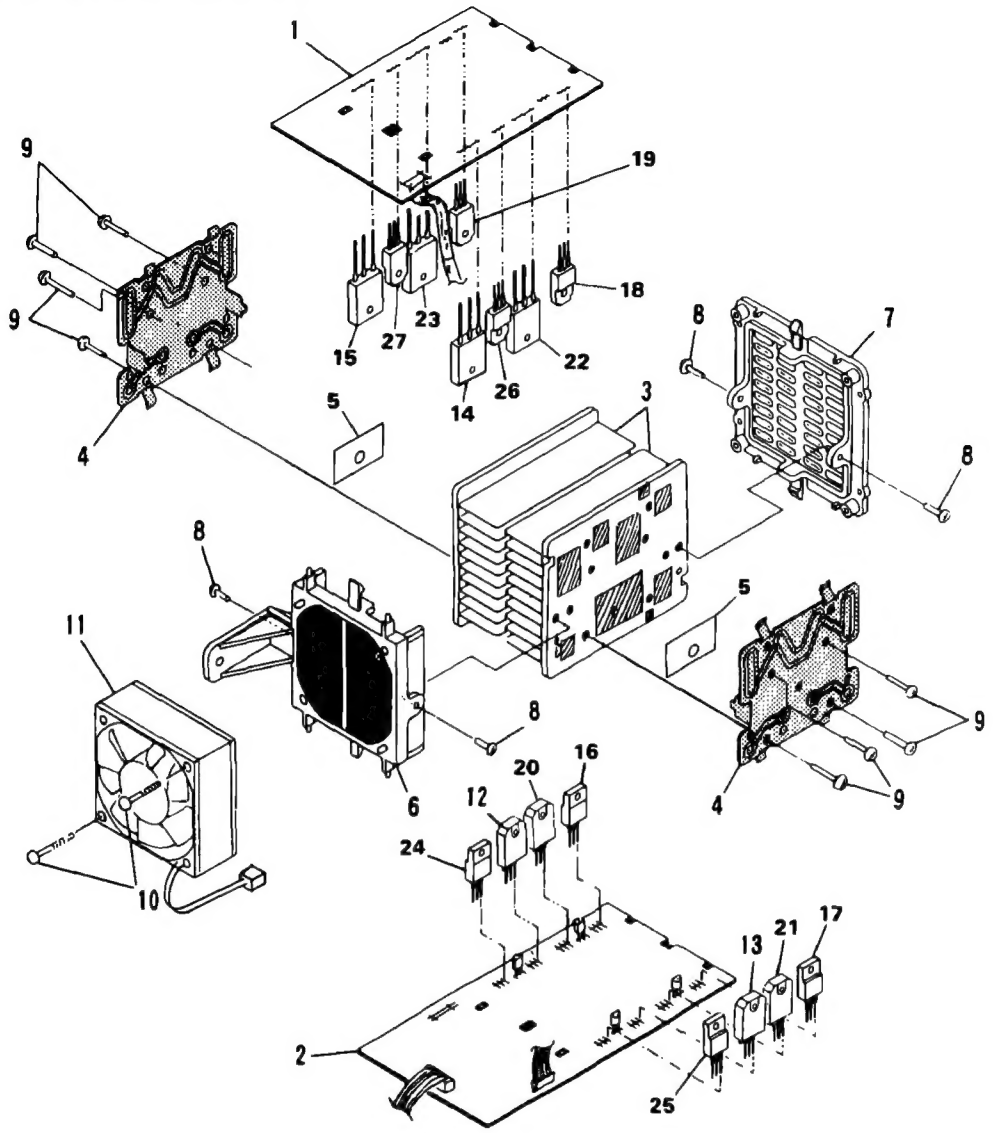

Notes

NOTE : Screws adjacent to ▼ mark on product are used for disassembly.

- *Ensure that silicon grease does not adhere to the MOLD A (No. 6) and MOLD B (No. 7).*

Parts List

Mark	No.	Description	Parts No.
	1	FRONT ASSY	RWZ3697
	2	REAR ASSY	RWZ3698
	3	HEAT SINK	ANH7008
	4	BRACKET	RNE1881
	5	MICA SHEET	REE1029
	6	MOLD A	AMR7005
	7	MOLD B	AMR7006
	8	SCREW (3×10)	ABA1021
	9	SCREW	BBZ30P140FZK
	10	SCREW	BPZ30P350FZK
	11	DC FAN MOTOR	AXM7003
⚠	12	TRANSISTOR (Q15)	2SA1264N
⚠	13	TRANSISTOR (Q16)	2SA1264N
⚠	14	TRANSISTOR (Q55)	2SA1264N
⚠	15	TRANSISTOR (Q56)	2SA1264N
⚠	16	TRANSISTOR (Q13)	2SA1837
⚠	17	TRANSISTOR (Q14)	2SA1837
⚠	18	TRANSISTOR (Q53)	2SA1837
⚠	19	TRANSISTOR (Q54)	2SA1837
⚠	20	TRANSISTOR (Q17)	2SC3181N
⚠	21	TRANSISTOR (Q18)	2SC3181N
⚠	22	TRANSISTOR (Q57)	2SC3181N
⚠	23	TRANSISTOR (Q58)	2SC3181N
⚠	24	TRANSISTOR (Q11)	2SC4793
⚠	25	TRANSISTOR (Q12)	2SC4793
⚠	26	TRANSISTOR (Q51)	2SC4793
⚠	27	TRANSISTOR (Q52)	2SC4793

2.3 EXTERIOR

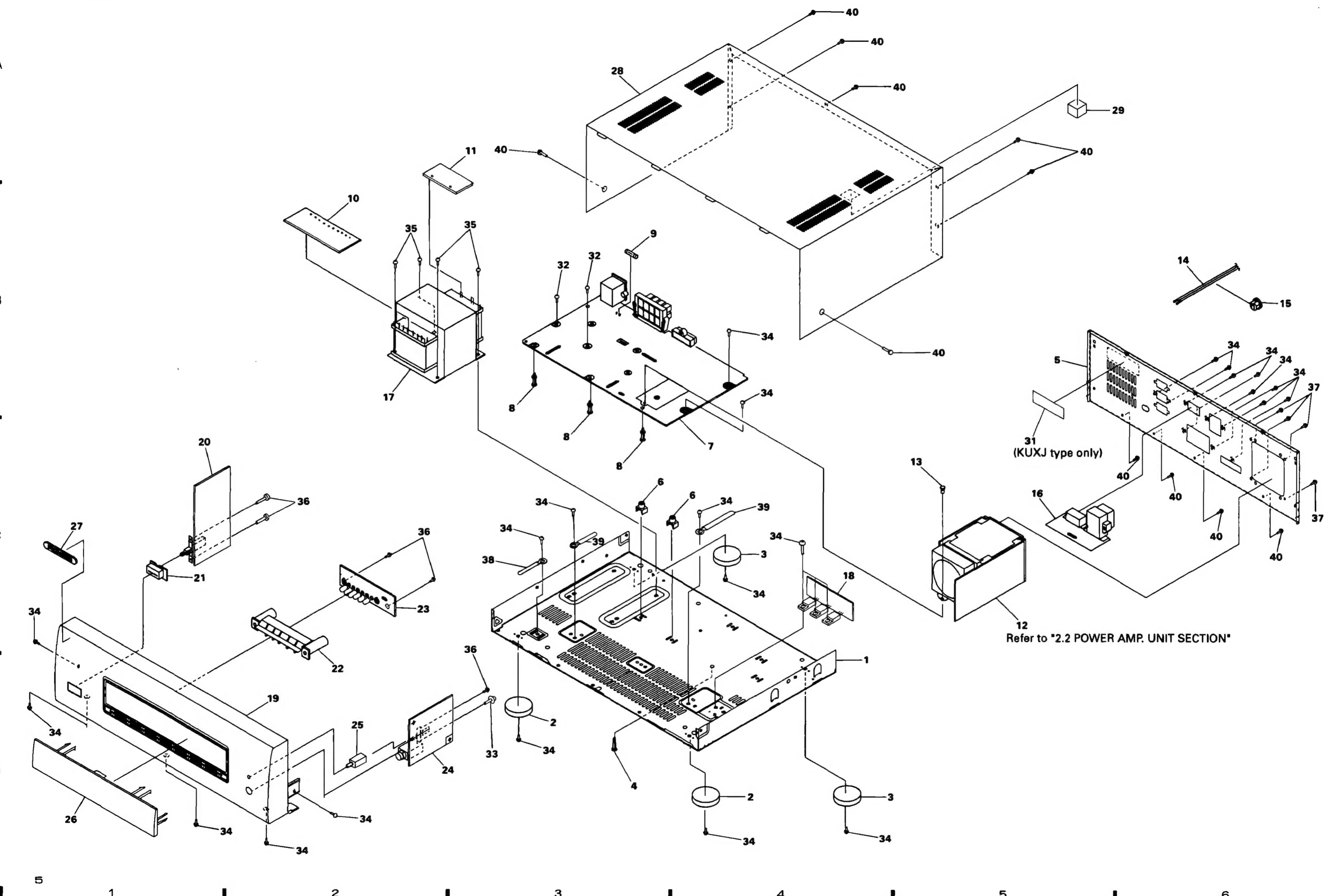

40
40
40
28
29
40
40
11
10
35
35
9
32
32
14
15
34
40
5
34
34
34
34
37
17
8
8
8
7
34
31
(KUXJ type only)
13
40
40
40
40
37
20
36
6
6
34
39
16
27
36
34
39
34
3
34
38
21
23
18
34
12
Refer to "2.2 POWER AMP. UNIT SECTION"
22
1
36
19
2
34
25
33
24
34
4
2
3
26
34
34
34
34
34

Parts List

Mark	No.	Description	Parts No.
NSP	1	CHASSIS	RNE1874
	2	INSULATOR ASSY	PNW1912
	3	INSULATOR ASSY	DXA1490
NSP	4	PCB HOLDER	AEC1583
	5	REAR PANEL	RNA2037
	6	PCB MOLD	AMR2533
	7	AF ASSY	RWZ3686
	8	PCB SUPPORT	AEC1581
⚠	9	FUSE (FU151, 8.0A)·	REK1086
	10	SECONDARY ASSY	RWZ3692
	11	PRIMARY ASSY	RWZ3772
	12	POWER AMP. UNIT	RXQ7024
	13	PUSH RIVET	AEC7010
⚠	14	AC POWER CORD	PDG1015
	15	CORD STOPPER	AEP – 113
	16	SP ASSY	RWZ3690
⚠	17	POWER TRANSFORMER (T1)	RTT1307
	18	REGURATOR ASSY	RWZ3687
	19	FRONT PANEL	RAH2692
	20	POWER SW ASSY	RWZ3691
	21	POWER BUTTON	AAD7064
	22	INDI. LENS	AAK7075
	23	LED ASSY	RWZ3689
	24	H.P. ASSY	RWZ3688
	25	SPEAKER BUTTON	AAD2416
	26	ILLUMI. PANEL	RAH2696
	27	NAME PLATE	PAM1608
	28	BONNET CASE	ANE1528
	29	SPACER	REB1300
	30	.....	
	31	65 LABEL (KUXJ TYPE ONLY)	ORW1069
	32	SCREW (3×18)	ABA1018
	33	SCREW (2.6×8)	ABA1095
	34	SCREW	BBZ30P080FZK
	35	SCREW	BBZ40P080FZK
	36	SCREW	BPZ26P080FMC
	37	SCREW	VPZ30P080FZK
	38	BINDER	AEC – 826
	39	BINDER	AEP – 215
	40	SCREW	BBT30P080FZK

3. SCHEMATIC AND PCB CONNTCTION DIAGRAMS

NOTE FOR SCHEMATIC DIAGRAMS (Type 1A)

1. When ordering service parts, be sure to refer to "PARTS LIST of EXPLODED VIEWS" or "PCB PARTS LIST".

2. Since these are basic circuits, some parts of them or the values of some components may be changed for improvement.

3. RESISTORS:
Unit: k:kΩ, M:MΩ, or Ω unless otherwise noted.
Rated power: 1/4W, 1/6W, 1/8W, 1/10W unless otherwise noted.
Tolerance: (F): ±1%, (G): ±2%, (K): ±10%, (M): ±20% or ±5% unless otherwise noted.

4. CAPACITORS:
Unit: p:pF or μF unless otherwise noted.
Ratings: capacitor (μF)/voltage(V) unless othrewise noted.
Rated voltage: 50V except for electrolytic capacitors.

5. COILS:
Unit: m:mH or μH unless otherwise noted.

6. VOLTAGE AND CURRENT:
V : Signal voltage at rated output.
or ← V:
DC voltage (V) at no input signal unless otherwise noted.
Value in ( ) is DC voltage at rated power.
⇦ mA or ← mA:
DC current at no input signal unless otherwise noted.

7. OTHERS:
- ⊘ or ⊘ : Adjusting point.
- ◄ : Measurement point.
- The ⚠ mark found on some component parts indicates the importance of the safety factor of the parts. Therefore, when replacing, be sure to use parts of identical designation.

8. SCH-□ ON THE SCHEMATIC DIAGRAM:
- SCH-□ indicates the drawing number of the schematic dia gram. (SCH stands for schematic diagram.)

9. SWITCHES (Underline indicates switch position):
H.P ASSY
S201 : SPEAKERS(A / A+B)

3.1 OVERALL WIRING DIAGRAMS

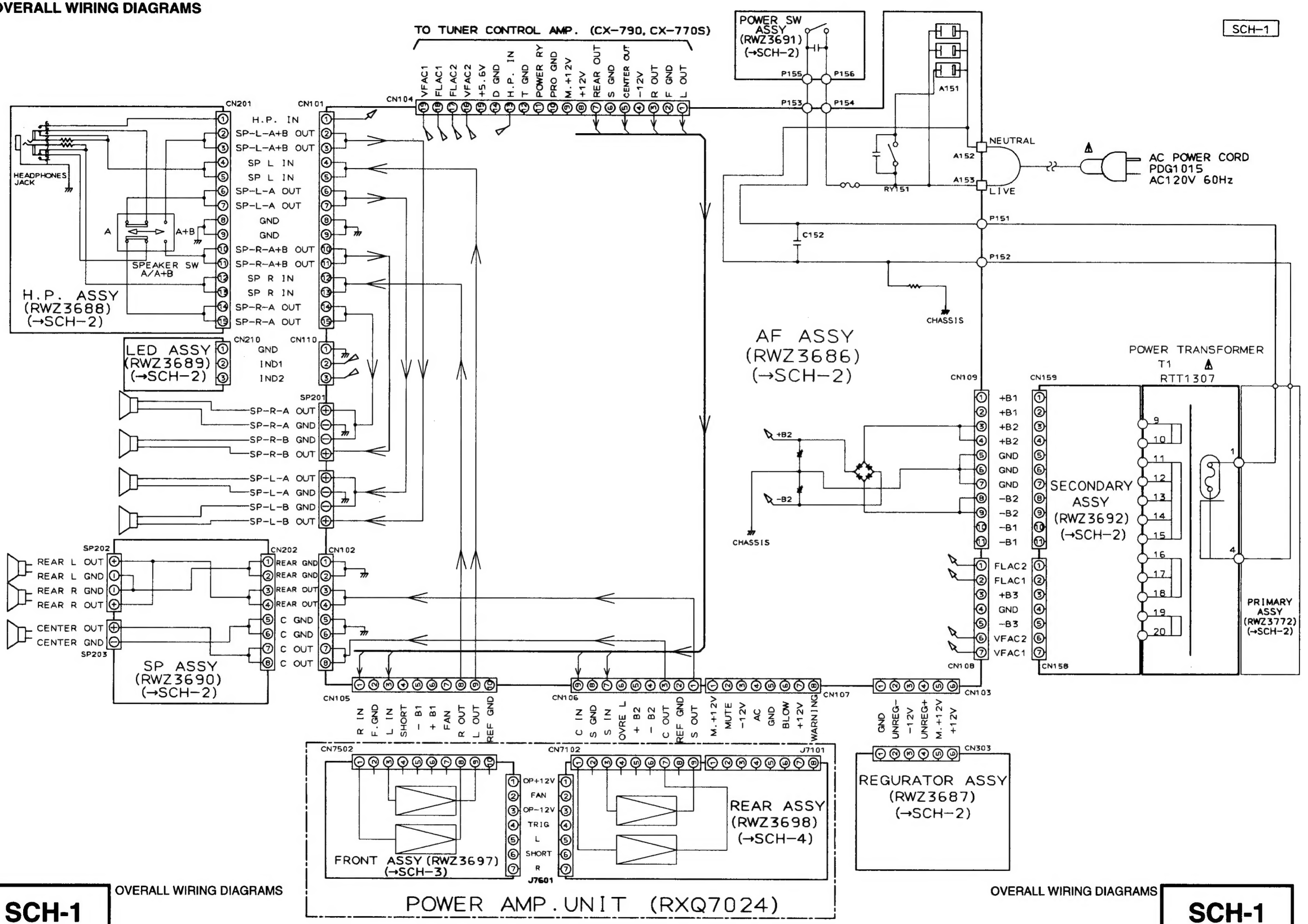

3.2 AF, REGURATOR, H.P., LED, SP, POWER SW, SECONDARY AND PRIMARY ASSEMBLIES

SCH-2

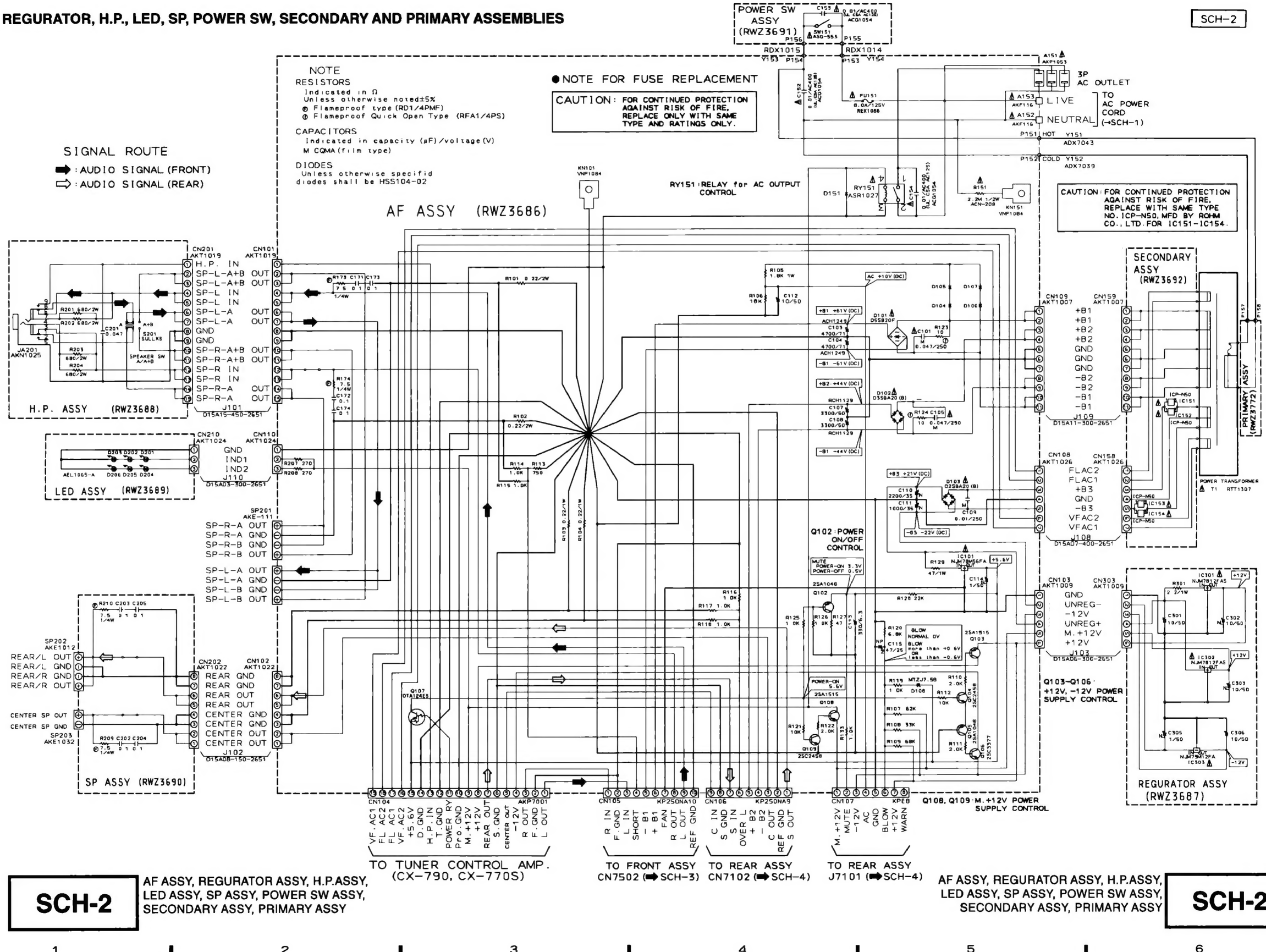

SP ASSY

PCB-1

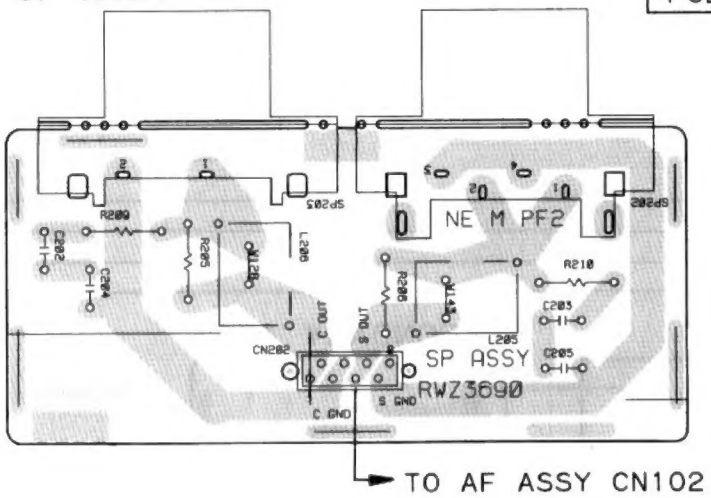

NOTE FOR PCB DIAGRAMS:
1. Part numbers in PCB diagrams match those in the schematic diagrams.
2. A comparison between the main parts of PCB and schematic diagrams is shown below.

Symbol in PCB Diagrams	Symbol in Schematic Diagrams	Part Name
B C E	B C E B C E	Transistor
B C E	B C E B C E	Transistor with resistor
D G S	D G S D G S	Field effect transistor
		Resistor array
		3-terminal regulator

H.P. ASSY

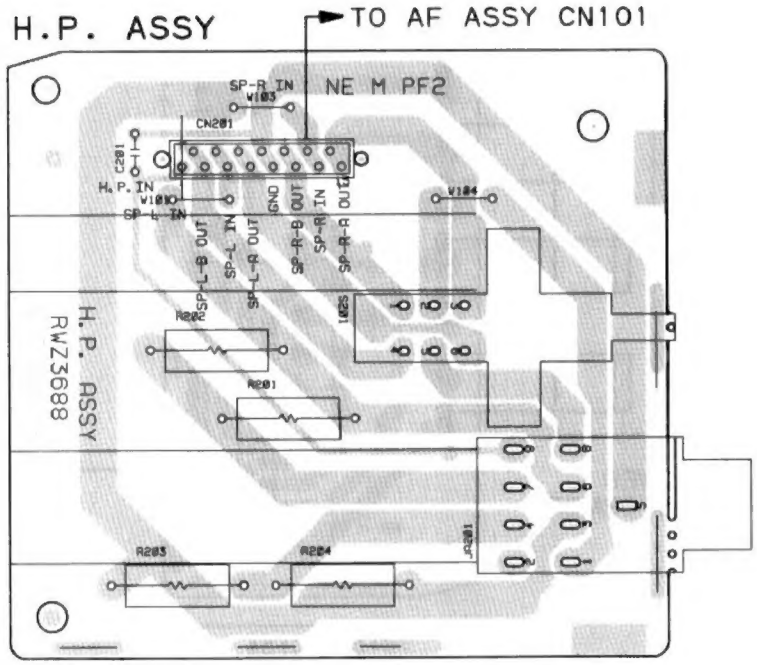

LED ASSY

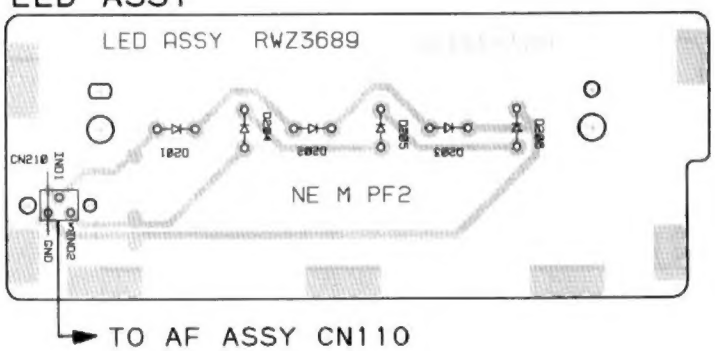

RNP1644-B

- This diagram is viewed from the mounted parts side.
- The parts mounted on this PCB include all necessary parts for several destinations. For further information for respective destinations, be sure to check with the schematic diagram.

PCB-2

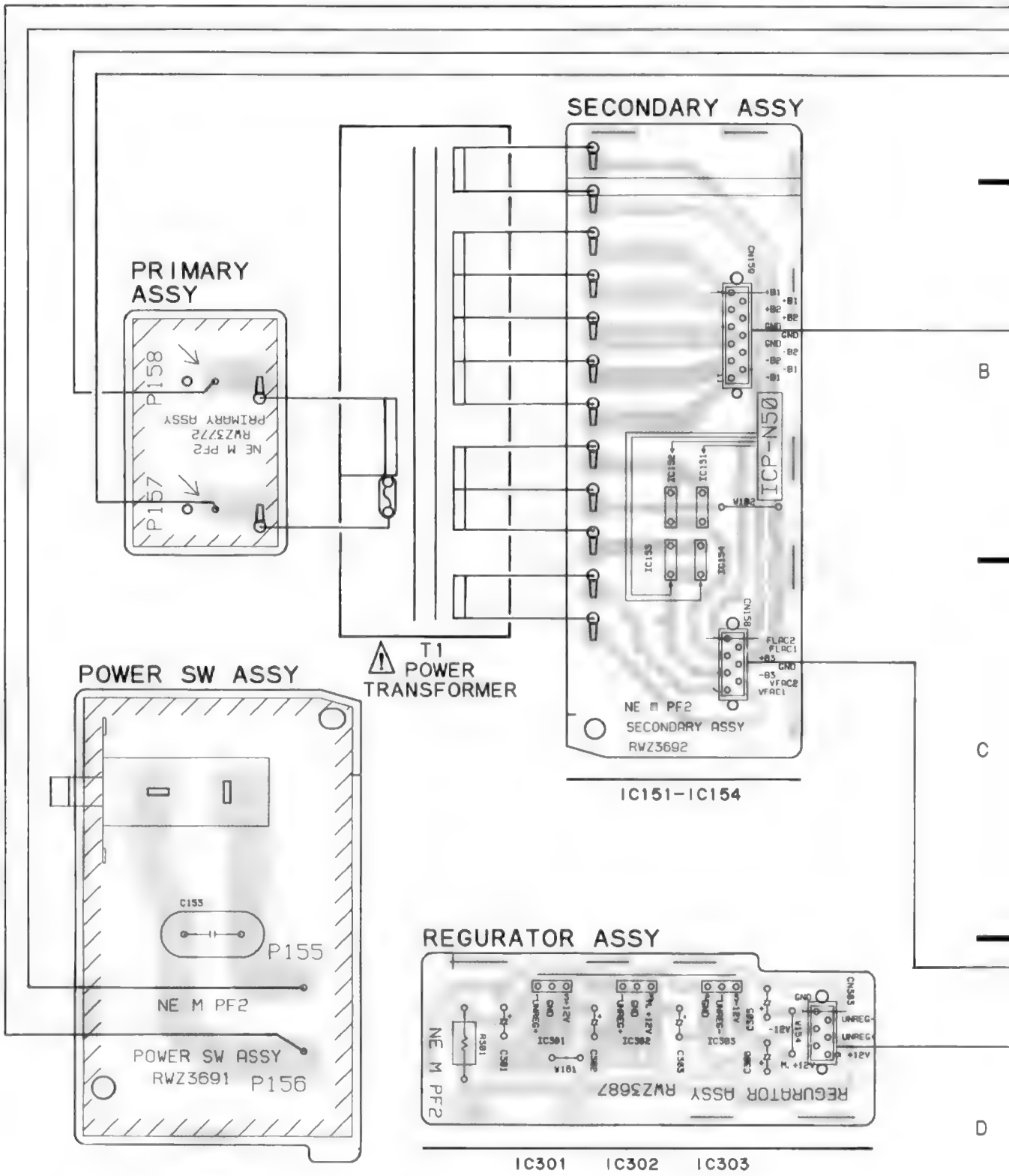

- This diagram is viewed from the mounted parts side.

RNP1644-B

- The parts mounted on this PCB include all necessary parts for several destinations.
  For further information for respective destinations, be sure to check with the schematic diagram.

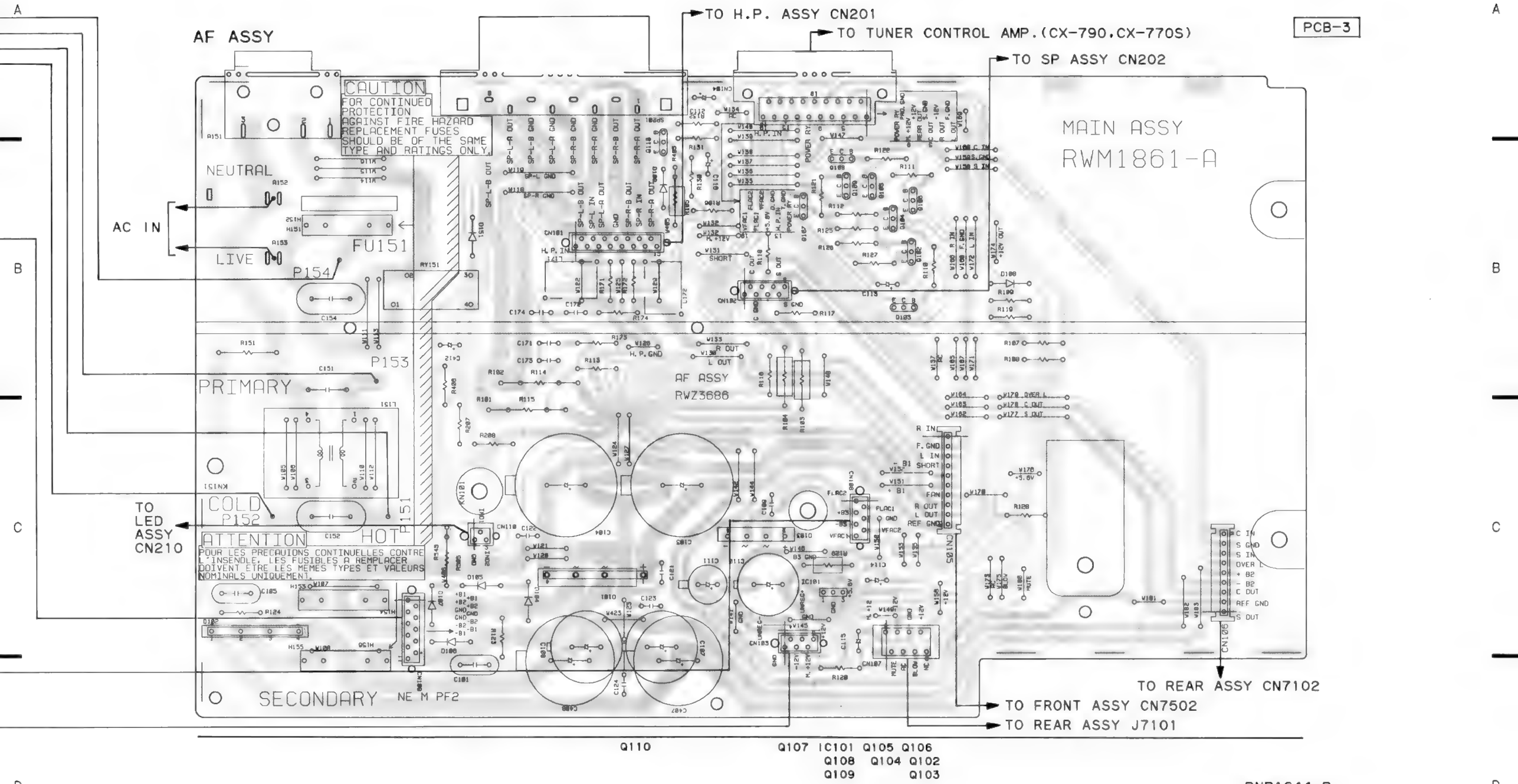

- This diagram is viewed from the mounted parts side.
- The parts mounted on this PCB include all necessary parts for several destinations.
  For further information for respective destinations, be sure to check with the schematic diagram.

3.3 FRONT ASSEMBLY

FRONT ASSY (RWZ3697)

SCH-3

Q7501 : BIAS TEMPEATURE COMPENSATION

Q51, Q53, Q7505, Q7507 : DRIVER TRANSISTOR

Q55, Q57 : POWER TRANSISTOR

IC7501 (1/2) : VOLTAGE AMPLIFICATION

IC7501 (2/2) : VOLTAGE AMPLIFICATION

TO AF ASSY CN105 (➡SCH-2)

CN7502 KM250NA10L

TO REAR ASSY J7601 (➡SCH-4)

J7601 DHH07-125-2877

NORMAL : +B1 BLOW 0V

CN7504 AKC-113 BLOW TRIG

SIGNAL ROUTE

➡ : AUDIO SIGNAL (FRONT)

NOTES

* ALL RESISTORS ARE IN OHMS, 1/10W, 5% UNLESS OTHERWISE SPECIFIED.
* ALL CAPACITORS ARE IN MICROFARADS UNLESS OTHERWISE SPECIFIED.
* THE COMPONENTS IDENTIFIED BY ⚠ MARK ARE CRITICAL FOR SAFETY. REPLACE ONLY WITH PART NUMBER SPECIFIED ON SERVICE PARTS LIST.
* VOLTAGE VALUE IS A REFERENCE VALUE BETWEEN THE GROUNDING. VOLTAGES SHOWN UNDER NO LOAD CONDITION.
* —□□— SHOWS MODEL DEPENDENT BIAS CURRENT ADJUSTMENT TAP. INCREASING OR DECREASING THE BIAS BY SOLDERING BRIDGE.
* THE COMPONENTS SURROUNDED BY [ ] ARE NOT BELONG TO THE THIS ASSY.

Q7502 : BIAS TEMPEATURE COMPENSATION

Q52, Q54, Q7506, Q7508 : DRIVER TRANSISTOR

Q56, Q58 : POWER TRANSISTOR

PCB-4

FRONT ASSY

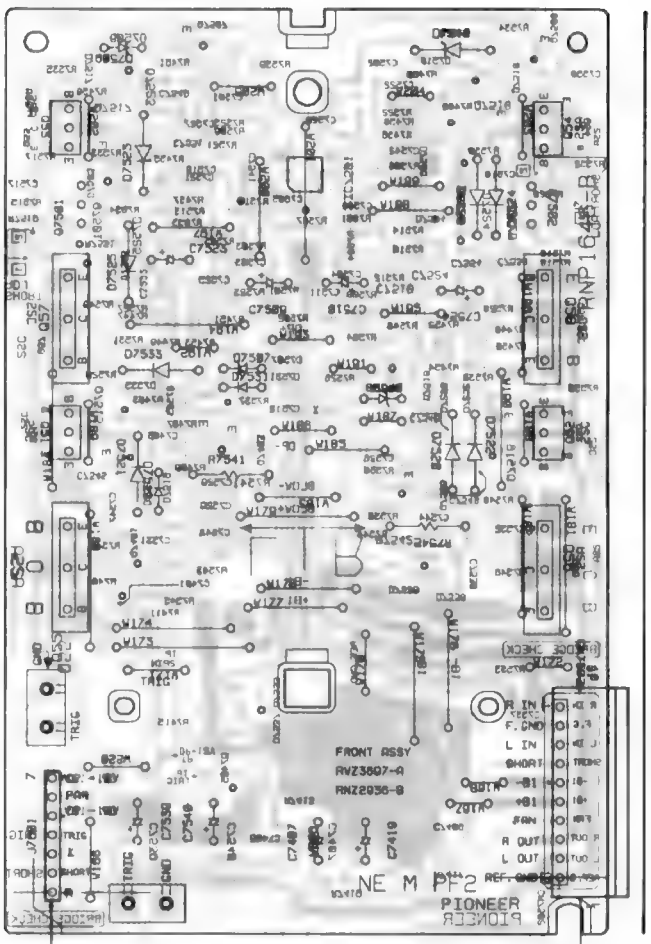

RNP1646-B

- This diagram is viewed from the mounted parts side.
- The parts mounted on this PCB include all necessary parts for several destinations.
  For further information for respective destinations, be sure to check with the schematic diagram.

3.4 REAR ASSEMBLY

PCB-5

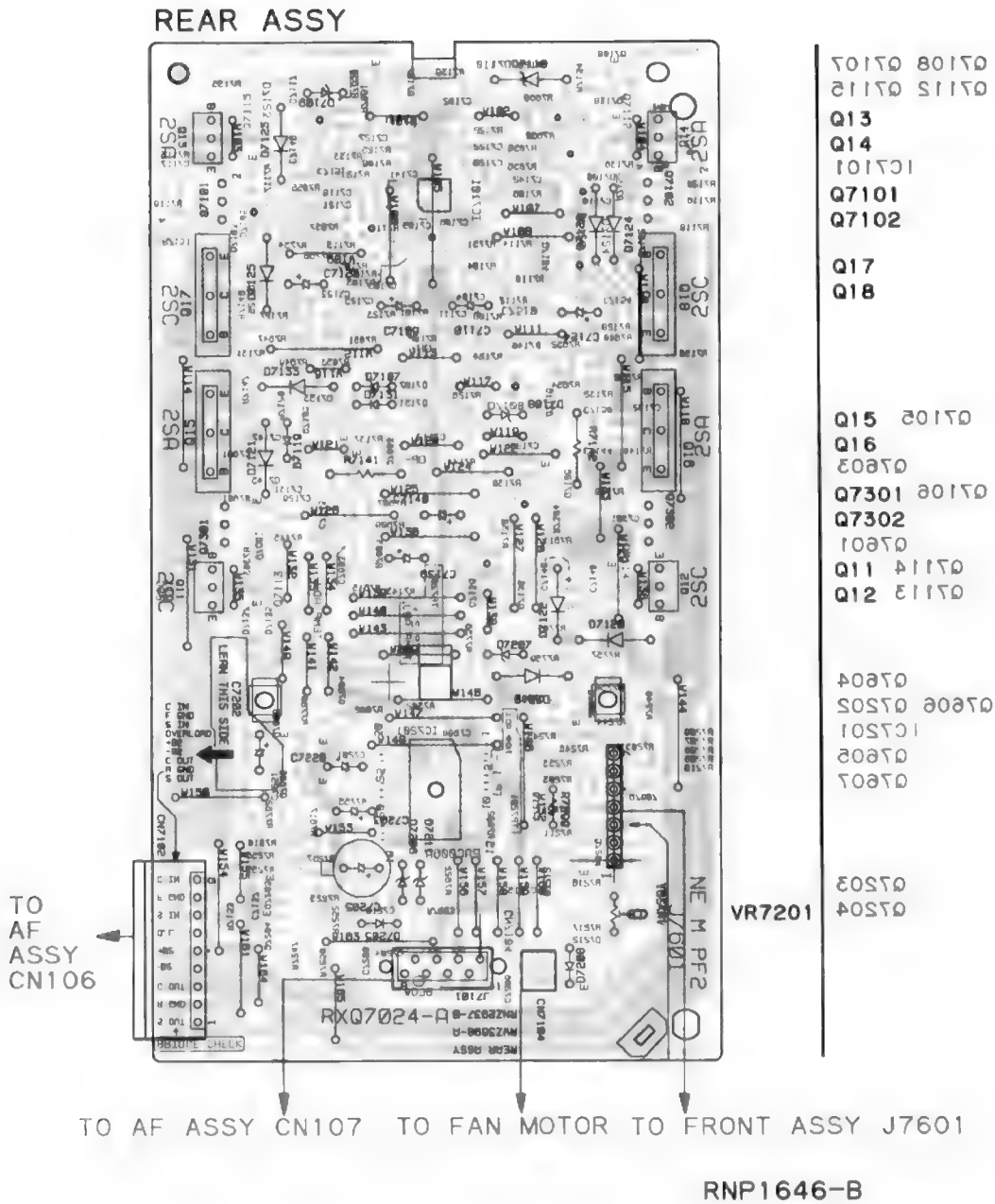

- This diagram is viewed from the mounted parts side.
- The parts mounted on this PCB include all necessary parts for several destinations.
  For further information for respective destinations, be sure to check with the schematic diagram.

REAR ASSY (RWZ3698)

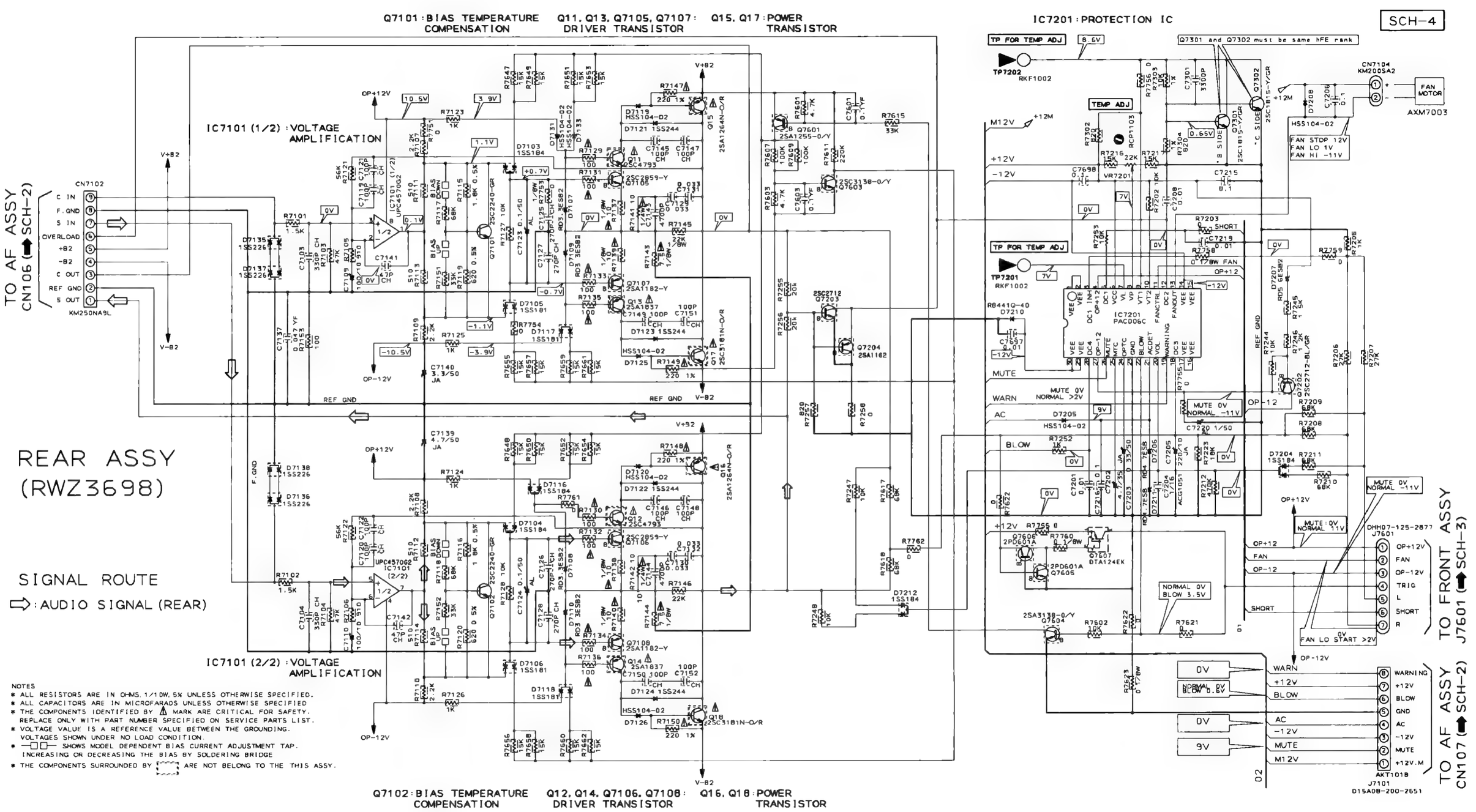

NOTES
* ALL RESISTORS ARE IN OHMS, 1/10W, 5% UNLESS OTHERWISE SPECIFIED.
* ALL CAPACITORS ARE IN MICROFARADS UNLESS OTHERWISE SPECIFIED
* THE COMPONENTS IDENTIFIED BY ⚠ MARK ARE CRITICAL FOR SAFETY. REPLACE ONLY WITH PART NUMBER SPECIFIED ON SERVICE PARTS LIST.
* VOLTAGE VALUE IS A REFERENCE VALUE BETWEEN THE GROUNDING. VOLTAGES SHOWN UNDER NO LOAD CONDITION.
* —□□— SHOWS MODEL DEPENDENT BIAS CURRENT ADJUSTMENT TAP. INCREASING OR DECREASING THE BIAS BY SOLDERING BRIDGE
* THE COMPONENTS SURROUNDED BY [ ] ARE NOT BELONG TO THE THIS ASSY.

Q7102 : BIAS TEMPERATURE COMPENSATION
Q12, Q14, Q7106, Q7108 : DRIVER TRANSISTOR
Q16, Q18 : POWER TRANSISTOR

REAR ASSY **SCH-4**

REAR ASSY **SCH-4**

4. PCB PARTS LIST

NOTES:

- *Parts marked by "NSP" are generally unavailable because they are not in our Master Spare Parts List.*
- *The ⚠ mark found on some component parts indicates the importance of the safety factor of the part. Therefore, when replacing, be sure to use parts of identical designation.*
- *Parts marked by "◉" are not always kept in stock. Their delivery time may be longer than usual or they may be unavailable.*
- *When ordering resistors, first convert resistance values into code form as shown in the following examples.*

Ex.1 When there are 2 effective digits (any digit apart from 0), such as 560 ohm and 47k ohm (tolerance is shown by J = 5%, and K = 10%).

560Ω	→	*56 × 10¹*	→ *561*	*RD1/4PU561J*
47kΩ	→	*47 × 10³*	→ *473*	*RD1/4PU473J*
0.5Ω	→	*0R5*	.....	*RN2H0R5K*
1Ω	→	*1R0*	.....	*RS1P1R0K*

Ex.2 When there are 3 effective digits (such as in high precision metal film resistors).

5.62kΩ	→	*562 × 10¹*	→ *5621*	*RN1/4PC5621F*

Mark	No.	Description	Parts No.
LIST OF ASSEMBLIES			
NSP	MAIN ASSY		RWM1861
	├ AF ASSY		RWZ3686
	├ REGURATOR ASSY		RWZ3687
	├ H.P. ASSY		RWZ3688
	├ LED ASSY		RWZ3689
	├ SP ASSY		RWZ3690
	├ POWER SW ASSY		RWZ3691
	├ SECONDARY ASSY		RWZ3692
	└ PRIMARY ASSY		RWZ3772
	POWER AMP. UNIT		RXQ7024
	├ FRONT ASSY		RWZ3697
	└ REAR ASSY		RWZ3698
MAIN ASSY			
OTHERS			
	Y154	BOARDIN READ WIRE	RDX1014
	Y153	BOARDIN READ WIRE	RDX1015
AF ASSY			
SEMICONDUCTORS			
⚠	IC101		NJM78M56FA
	Q102, Q105		2SA1048
	Q103, Q108		2SA1515
	Q104, Q109		2SC2458
	Q106		2SC3377
	Q107		DTA124ES
⚠	D103		D2SBA20(B)
⚠	D102		D3SBA20(B)
⚠	D101		D5SB20F
	D104 – D107, D151		HSS104 – 02
	D108		MTZJ7.5B
RELAY			
⚠	RY151		ASR1027

Mark	No.	Description	Parts No.
CAPACITORS			
⚠	C152, C154	(0.01μF/AC400V)	ACG1054
	C103, C104	(4700pF/DC63V)	ACH1249
	C115		CEANP470M25
	C114		CEAS010M50
	C112		CEAS100M50
	C111		CEAS102M35
	C110		CEAS222M35
	C113		CEAS331M6R3
	C171 – C174		CFTXA104J50
	C109		CQMA103K250
⚠	C101, C105		CQMA473K250
	C107, C108	(3300pF/DC50V)	RCH1129
RESISTORS			
⚠	R151	(2.2MΩ, 1/2W)	ACN – 208
	R173, R174		RD1/4PMF7R5J
⚠	R123, R124		RFA1/4PS100J
	R105		RS1LMF182J
	R129		RS1LMF470J
	R103, R104		RS2LMFR22J
	R101, R102		RS3LMFR22J
		Other Resistors	RD1/4PU□□□J
OTHERS			
		SPEAKER TERMINAL 8 – P	AKE – 111
⚠		AC OUTLET 3P	AKP1053
		SOCKET(19P)	AKP7001
		CABLE HOLDER	AKT1007
	CN105	10P SOCKET	KP250NA10
	CN106	9P SOCKET	KP250NA9
	CN107	CONNECTOR(8P)	KPE8
		PCB BINDER	VEF1040
	KN101, KN151	EARTH METAL FITTING	VNF1084
REGURATOR ASSY			
SEMICONDUCTORS			
⚠	IC301, IC302		NJM7812FAS
⚠	IC303		NJM79M12FA

Mark	No.	Description	Parts No.
CAPACITORS			
	C305		CEAS010M50
	C301 – C303, C306		CEAS100M50
RESISTOR			
	R301		RS1LMF2R2J
H.P. ASSY			
SWITCH			
	S201	PUSH SWITCH	SULLXS
CAPACITOR			
	C201		CKCYF473Z50
RESISTORS			
	R201 – R204		RS2LMF681J
OTHERS			
		JACK	AKN1025
LED ASSY			
SEMICONDUCTORS			
	D201 – D206		AEL1065
SP ASSY			
CAPACITORS			
	C202 – C205		CQMA104J50
RESISTORS			
	R209, R210		RD1/4PMF7R5J
OTHERS			
		SPEAKER TERMINAL 4 – P	AKE1012
		SPEAKER TERMINAL 2 – P	AKE1032
POWER SW ASSY			
SWITCH			
⚠	S151	PUSH SWITCH	ASG – 553
CAPACITOR			
⚠	C153	(0.01μF/AC400V)	ACG1054
SECONDARY ASSY			
SEMICONDUCTORS			
⚠	IC151 – IC154		ICP – N50
OTHERS			
		CABLE HOLDER	AKT1007
PRIMARY ASSY			
OTHERS			
	Y152	BOARDIN READ WIRE	ADX7039
	Y151	BOARDIN READ WIRE	ADX7043
FRONT ASSY			
SEMICONDUCTORS			
	IC7501		UPC4570G2(5)
	Q7507, Q7508		2SA1182
	Q7401		2SA1255
	Q7501, Q7502		2SC2240
	Q7505, Q7506		2SC2859

Mark	No.	Description	Parts No.
	Q7403, Q7405		2SC3138
	D7505, D7506, D7517, D7518		1SS181
	D7503, D7504, D7516		1SS184
	D7535 – D7538		1SS226
	D7521 – D7524		1SS244
	D7519, D7520, D7525, D7526, D7531		HSS104 – 02
	D7533		HSS104 – 02
	D7507 – D7510		RD3.3ESB2
CAPACITORS			
	C7519 – C7522, C7545 – C7552		CCSQCH101J50
	C7525 – C7528		CCSQCH271J50
	C7503, C7504		CCSQCH331J50
	C7541, C7542		CCSQCH470J50
	C7523, C7524		CEALR10M50
	C7509, C7510		CEAS101M10
	C7540		CEJA3R3M50
	C7419		CEJA470M16
	C7539		CEJA4R7M50
	C7405		CKSQYB104K25
	C7529 – C7532		CKSQYB333K50
	C7543, C7544		CKSQYB472K50
	C7401, C7403		CKSQYF104Z50
	C7537		CKSQYF473Z50
RESISTORS			
	R7515, R7516	(1.8kΩ, 1/10W)	ACN1107
⚠	R7541, R7542		RD1/4PMF100J
	R7519, R7520		RN1/10SE621D
⚠	R7529 – R7536		RS1/10S101J
⚠	R7547 – R7550		RS1/10S2200F
	R7853		RS1/8S000J
⚠	R7537 – R7540		RS1/8S100J
	R7553		RS1/8S101J
⚠	R7543, R7544		RS1/8S7R5J
		Other Resistors	RS1/10S□□□J
OTHERS			
	CN7502	10P PLUG	KM250NA10L
REAR ASSY			
SEMICONDUCTORS			
	IC7201		PAC006C
	IC7101		UPC4570G2
	Q7605, Q7606		2PD601A
	Q7204		2SA1162
	Q7107, Q7108		2SA1182
	Q7601		2SA1255
	Q7301, Q7302		2SC1815
	Q7101, Q7102		2SC2240
	Q7202, Q7203		2SC2712
	Q7105, Q7106		2SC2859
	Q7603, Q7604		2SC3138
	Q7607		DTA124EK
	D7105, D7106, D7117, D7118		1SS181
	D7103, D7104, D7116, D7204, D7212		1SS184
	D7135 – D7138		1SS226

Mark	No.	Description	Parts No.
	D7121 – D7124		1SS244
	D7119, D7120, D7125, D7126, D7131		HSS104 – 02
	D7133, D7205, D7208		HSS104 – 02
	D7210		RB441Q – 40
	D7107 – D7110		RD3.3ESB2
	D7206, D7211		RD4.7ESB
	D7207		RD5.6ESB2
CAPACITORS			
	C7204	(1μF/DC16V)	ACG1051
	C7119 – C7122, C7145 – C7152		CCSQCH101J50
	C7125 – C7128		CCSQCH271J50
	C7103, C7104		CCSQCH331J50
	C7141, C7142		CCSQCH470J50
	C7220		CEAL010M50
	C7123, C7124		CEALR10M50
	C7202		CEANL4R7M50
	C7109, C7110		CEAS101M10
	C7205		CEJA221M10
	C7140		CEJA3R3M50
	C7139		CEJA4R7M50
	C7203		CEJAR33M50
	C7201, C7208, C7219, C7697		CKSQYB103K50
	C7301		CKSQYB332K50
	C7129 – C7132		CKSQYB333K50
	C7143, C7144		CKSQYB472K50
	C7206, C7215, C7216, C7601, C7603		CKSQYF104Z50
	C7698		CKSQYF104Z50
	C7137		CKSQYF473Z50
RESISTORS			
	R7115, R7116	(1.8kΩ, 1/10W)	ACN1107
⚠	R7141, R7142		RD1/4PMF100J
	R7119, R7120		RN1/10SE621D
⚠	R7129 – R7136		RS1/10S101J
⚠	R7147 – R7150		RS1/10S2200F
	R7623, R7753, R7759, R7760		RS1/8S000J
⚠	R7137 – R7140		RS1/8S100J
	R7153		RS1/8S101J
	R7145		RS1/8S223J
⚠	R7143, R7144		RS1/8S7R5J
	VR7201	(22kΩ, 0.1W)	RCP1103
		Other Resistors	RS1/10S□□□J
OTHERS			
	CN7102	9P PLUG	KM250NA9L
		PCB BINDER	VEF1040

5. ADJUSTMENTS

POWER AMP. UNIT SECTION (Refer to Fig. 1.)

5.1 Handling Precautions

- Since the heat sink and transistor metallic parts are connected to the Front Amp output, make sure they do not contact the GND (chassis) or other circuits.
- Since there is residual high voltage in the Power Amp Module Assy ±B1 (FRONT ASSY) and ±B2 (REAR ASSY) even when the power is OFF, caution should be exercised. (If necessary, the voltage should be discharged).
- When handling the Power Amp. UNIT, make sure you do not touch the fan motor blade.

5.2 Adjustment and Confirmation of Idle Current

- Basically, the idle current needs to be confirmed when replacing a power transistor, driver transistor, or bias transistor, or when the entire split board Assy of the Power Amp. UNIT has been replaced.
- Make sure the heat sink has cooled sufficiently before measuring the idle current. (Temperature should be the same as room temperature; 25°C is ideal, if possible.)
- Idle current stipulated value: 3 – 50mA.

CAUTION :
Before performing this adjustment, short the blow trigger shorting pin (shown in Fig. 2) of the FRONT ASSY to prevent the protection IC from malfunction. After adjustment is completed, remove the short-circuit.

■ Front Amp Side (FRONT ASSY)

Step	Measurement	Item	Remarks
1	Lch side	Short both sides of C7123 and C7124 on the Rear Amp side.	Do not operate the Rear Amp side.
2		Insert a resistor (0.22Ω, 3W or more) in series in the connector CN7502 +B1 (or –B1) line (terminal No.5 or 6). (Refer to Fig.3)	For measuring voltage at both sides of resistor.
3		Short both sides of C7524.	Do not operate Rch side.
4		Turn the power ON, wait 6 seconds, and then measure the resistance voltage in Step 2.	Lch Idle current I=V/0.22 (Ω)
5	Rch side	● Same as Steps 1 and 2 above. ● Short both sides of C7523.	Do not operate Lch side.
6		Turn the power ON under the above conditions, and after 6 seconds measure the resistance voltage in Step 2.	
7	——	If the measured idle current is greater than 50mA, perform the following procedure.	
8	Lch side	Short between the Point Ⓐ pattern in Fig.4 using solder.	Connect R7517 to R7515 in a parallel circuit.
9	Rch side	Short between the Point Ⓑ pattern in Fig.4 using solder.	Connect R7518 to R7516 in a parallel circuit.
10	——	After performing Steps 8 and 9, remeasure the idle current and confirm that it is below 50mA.	
11	——	If the idle current is below 3mA, perform the following procedure.	
12	Lch side	Short between the Point Ⓒ pattern in Fig.4 using solder.	Connect R7551 to R7519 in a parallel circuit.
13	Rch side	Short between the Point Ⓓ pattern in Fig.4 using solder.	Connect R7552 to R7520 in a parallel circuit.
14	——	After performing Steps 12 and 13, remeasure the idle current and confirm that it is greater than 3mA (within 3 – 50mA).	

■ **Rear Amp Side (REAR ASSY)**

Step	Measurement	Item	Remarks
1	Center amp side	Short both sides of C7523 and C7524 on the Front Amp side.	Do not operate the Front Amp side.
2		Insert a resistor (0.22Ω, 3W or more) in series in the connector CN7102 +B2 (or −B2) line (terminal No.4 or 5). (Refer to Fig.5)	For measuring voltage at both sides of resistor.
3		Short both sides of C7124 on the Surround Amp side.	Do not operate the Surround Amp.
4		Turn the power ON, wait 6 seconds, and then measure the resistance voltage in Step 2.	Idle current : I=V/0.22 (Ω)
5	Surround amp side	● Same as Steps 1 and 2 above. ● Short both sides of C7123 on Surround Amp side.	Do not operate the Surround Amp.
6		Turn the power ON under the conditions in Steps 1 and 2, and after 6 seconds measure the resistance voltage in Step 2.	
7	—	If the measured idle current is greater than 50mA, perform the following procedure.	
8	Center amp side	Short between the Point Ⓔ pattern in Fig.6 using solder.	Connect R7117 to R7115 in a parallel circuit.
9	Surround amp side	Short between the Point Ⓕ pattern in Fig.6 using solder.	Connect R7118 to R7116 in a parallel circuit.
10	—	After performing Steps 8 and 9, remeasure the idle current and confirm that it is below 50mA.	
11	—	If the idle current is below 3mA, perform the following procedure.	
12	Center amp side	Short between the Point Ⓖ pattern in Fig.6 using solder.	Connect R7151 to R7119 in a parallel circuit.
13	Surround amp side	Short between the Point Ⓗ pattern in Fig.6 using solder.	Connect R7152 to R7120 in a parallel circuit.
14	—	After performing Steps 12 and 13, remeasure the idle current and confirm that it is greater than 3mA (within 3 – 50mA).	

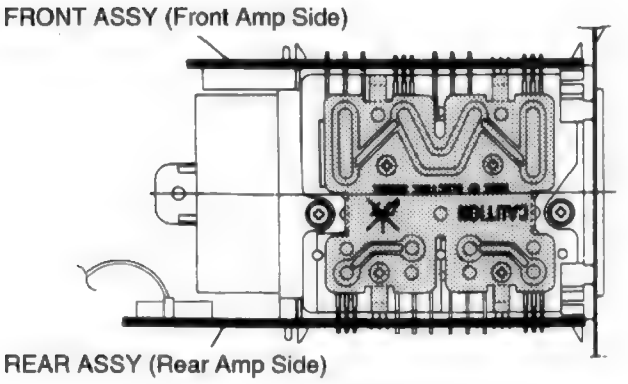

Fig. 1 POWER AMP. UNIT(RXQ7024)

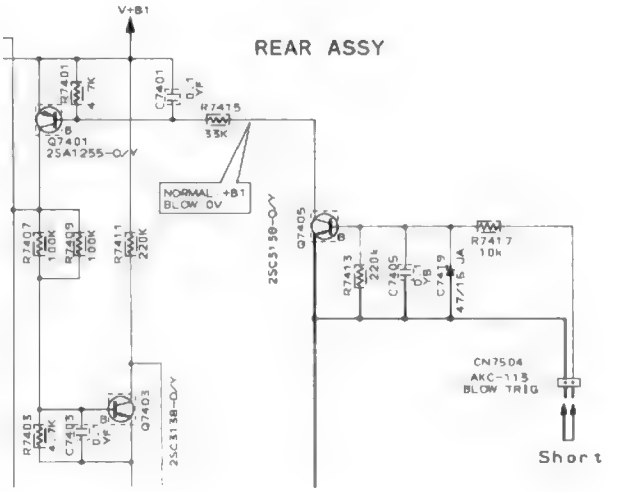

Fig. 2 BLOW TRIGGER CIRCUIT

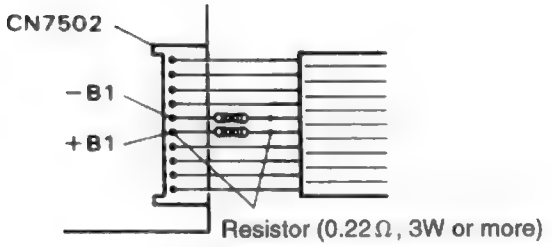

Fig. 3 FRONT ASSY

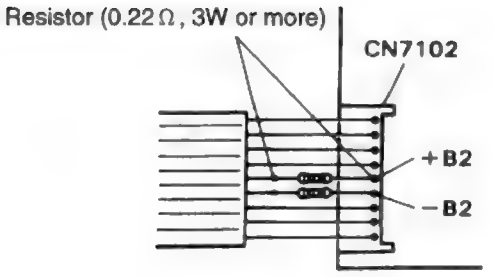

Fig. 5 REAR ASSY

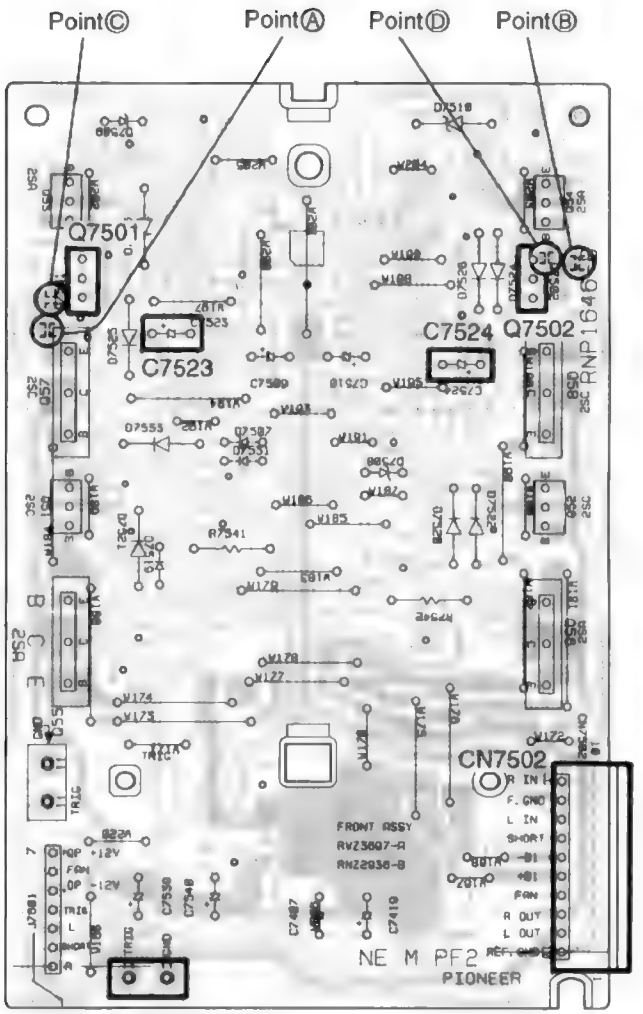

BLOW TRIGGER
SHORT PIN

Fig. 4 FRONT ASSY

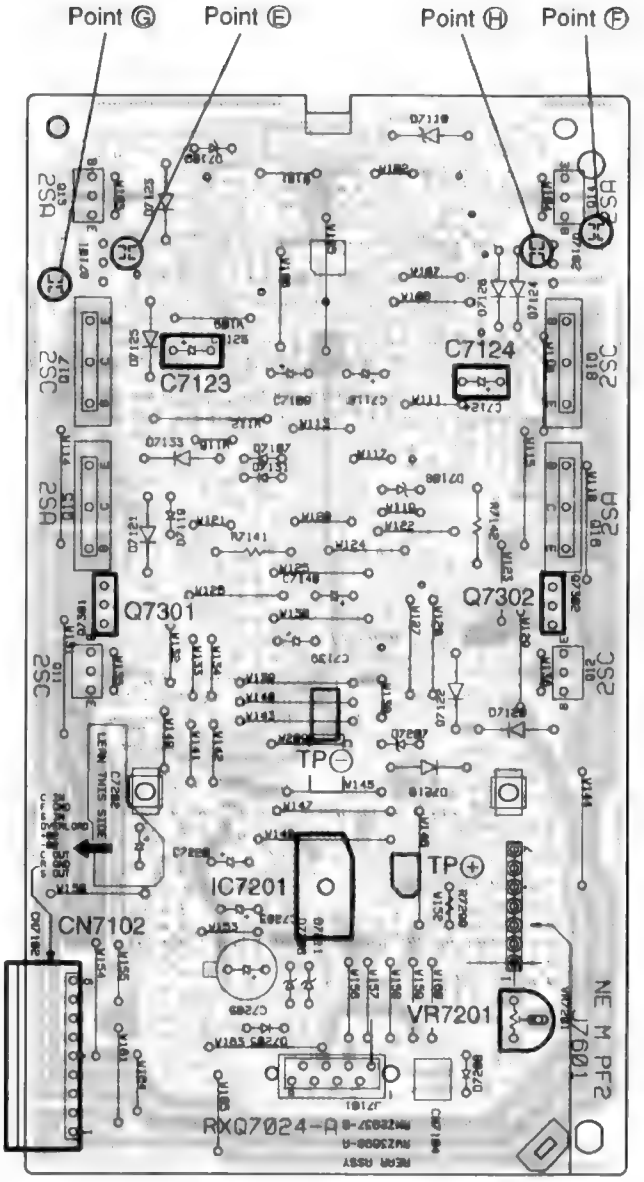

Fig. 6 REAR ASSY

5.3 Adjusting the Operating Temperature Setting of the Fan Motor (VR7201)

This adjustment is necessary when IC301 (+12V regulator), Q7301 and Q7302 (temperature sensors), or VR7201 has been replaced, or when the entire split board Assy of the Power Amp. UNIT has been replaced.

> CAUTION :
> Before performing this adjustment, short the blow trigger shorting pin (shown in Fig. 2) of the FRONT ASSY to prevent the protection IC from malfunction. After adjustment is completed, remove the short-circuit.

■ Adjustment-Related Cautions

- Make sure the heat sink has sufficiently cooled (is the same as room temperature Ta.)
- Once the power has been turned ON, make measurements and adjustments as quickly as possible. (If too much time is taken, the heat sink temperature will rise, and the measurements will deviate from the Ta measurement point.)

■ Adjustment

1. Connect a voltmeter between TEMP and TP (or between IC7201 terminals No.7 and 9). (Refer to Figs.6 and 7.)
2. Determine the fan motor operating temperature setting by means of the following formula. (Tolerance is within ±30mV.)
   Formula : (75°C – Ta) × 19 (mV)
   Ta : ambient temperature (°C)
3. Adjust VR7201 so that the voltage between TEMP and TP is the value obtaind from the above formula.
   For example :
   when the room temperature is 25°C,
   set value = (75 – 25) × 19 (mV)
   = 950mV (tolerance within ±30mV).

Note :
Adjustment during service should be ±30mV, but if this value cannot be obtained with the measuring instruments used for adjustment, ±50mV is acceptable.

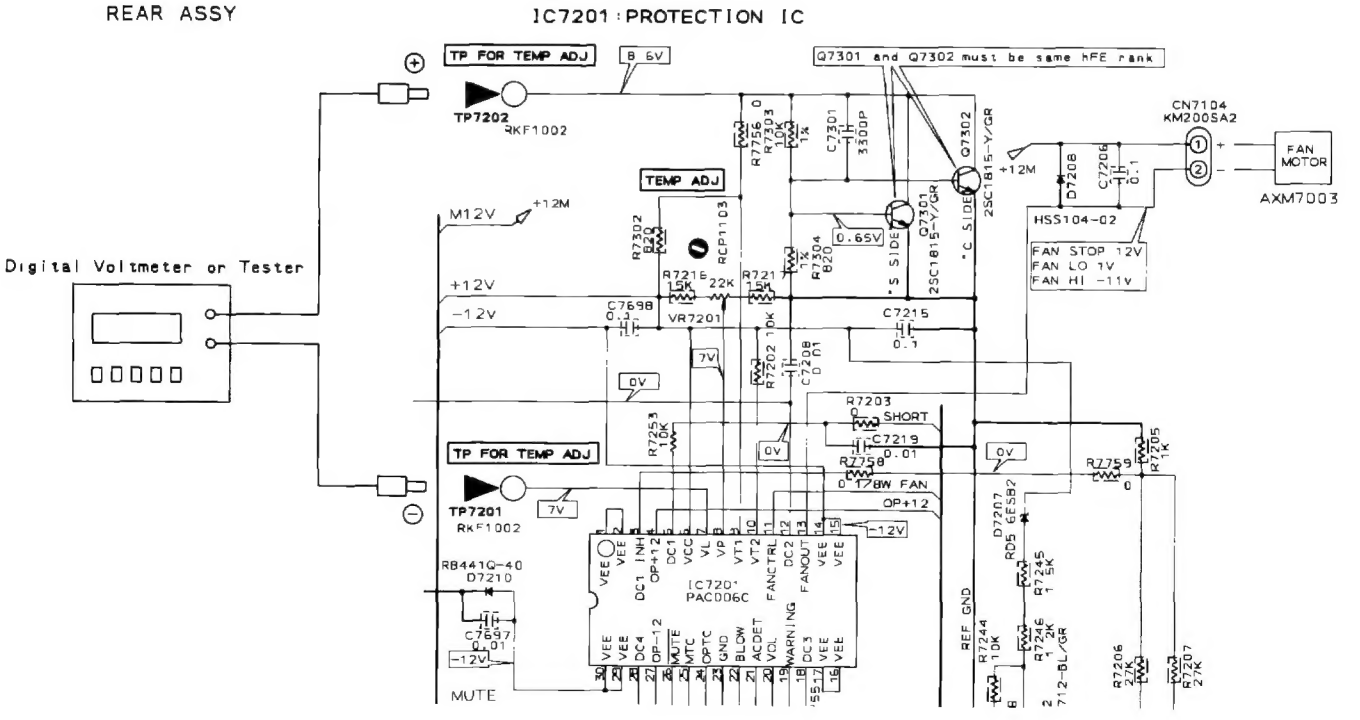

Fig. 7 Adjustment of Operating Temperature Setting of Fan Motor

6. HOW TO CHECK M-790

As M-790 is controlled from CX-790 or CX-770S, please carry out check in combination with CX-790 or CX-770S.

● How to Check M-790 only.

When checking of the operation of only M-790 is required, the operation can be easily checked according the following procedures.

1. Connect pin 14 (D.GND) and pin 11 (POWER RY) of the CN104 (external connection connector) on AF ASSY (RWZ3686).
2. When pressing the power switch of M-790, the set will enter normal operation status. After this, you can carry out check of the operation.

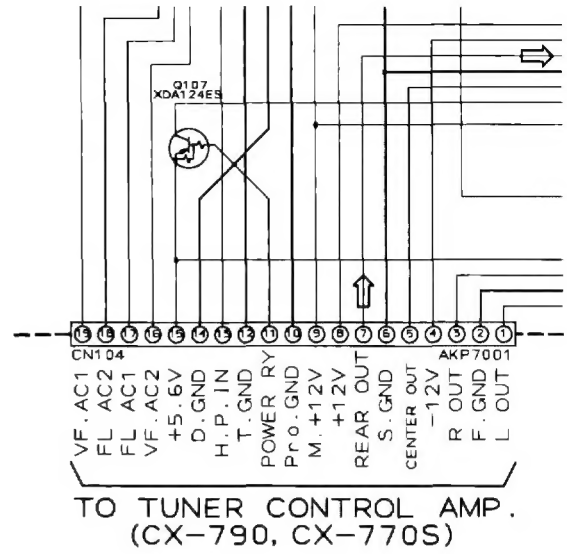

Fig. 8

7. BLOCK DIAGRAM

● **POWER AMP. UNIT SECTION**

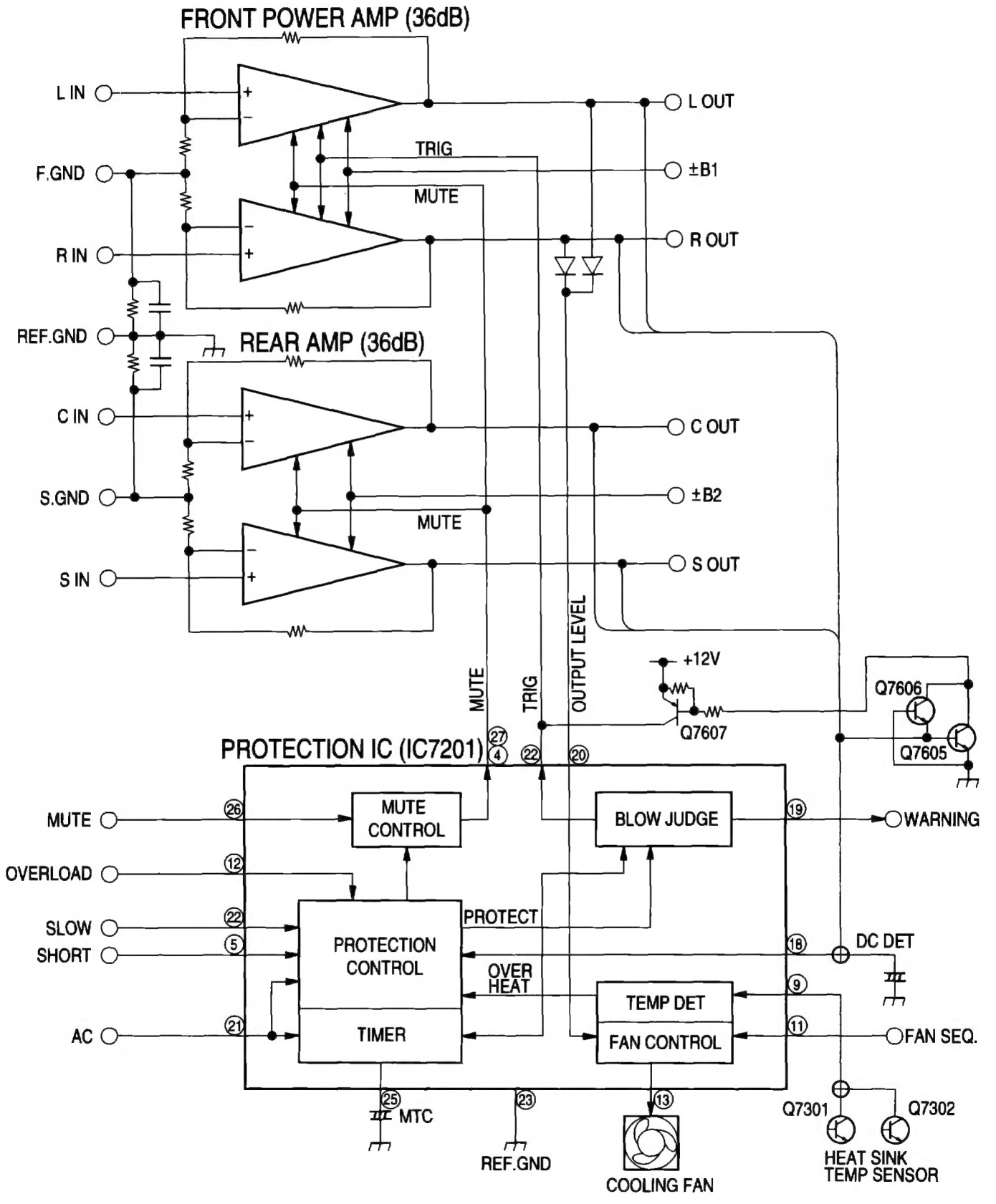

8. PANEL FACILITIES

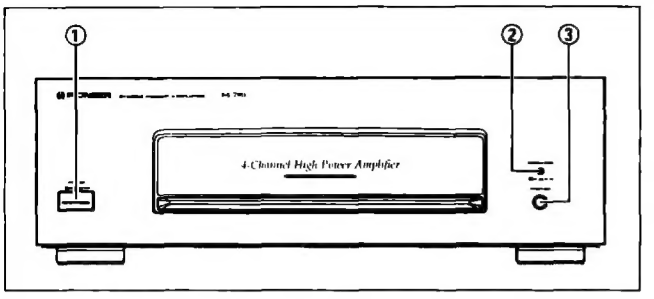

① POWER (OFF/ON) switch

When this switch is OFF, the tuner control amplifier's POWER switch does not function. When this switch is ON, the STANDBY indicator of the tuner control amplifier lights.

② SPEAKERS button (▮ A, ▬ A+B)

This is used to select the speaker through which you wish to listen.

▮ A : When the speakers connected to A terminals are in use.

▬ A+B When the speakers connected to A and B terminals are in use.
(There is no sound at this position when speakers are connected only to the A terminals.)

Be sure to use A terminals when you are using one pair of speakers only. No sound will be heard through the speakers when only one pair of speakers are connected to B terminals.

③ PHONES jack

This is a "standard plug-type jack" for headphones.

NOTE:

Sound is not heard from the speakers when headphones are in use.

9. SPECIFICATIONS

[Front], [Center], [Rear]

Continuous Power Output

Stereo (Front Channels) ..... Continuous Average Power Output is 100 Watts* per channel, min., at 8 ohms from 70 Hertz to 20,000 Hertz, with no more than 0.9 %** total harmonic distortion.

4-Channel

Front Channels ..... 70 W + 70 W (8 Ω , 1 kHz, 0.2 % THD)
Center Channel ..... 70 W (8 Ω , 1 kHz, 1 % THD)
Rear Channels ..... 70 W (8 Ω , 1 kHz, 1 % THD)

* *Measured pursuant to the Federal Trade Commission's Trade Regulation rules on Power Output Claims for Amplifiers.*

** *Measured By Audio Spectrum Analyzer.*

Miscellaneous

Power Requirements ..... AC 120 V, 60 Hz

Power Consumption

M-790 ..... 300 W, 400 VA

AC Outlets

Switched x 1 ..... 100 W (0.8 A) MAX
Unswitched x 2 ..... 200 W (1.6 A) MAX

Dimensions

M-790 ..... 420 (W) x 140 (H) x 336 (D) mm
16-9/16 (W) x 5-1/2 (H) x 13-1/4 (D) in

Weight (without package)

M-790 ..... 7.8 kg (17 lb 3 oz)

NOTE:

- *Specifications and design are subject to possible modifications without notice due to improvements.*