Joerns Oxford®

Parts Manual

Oxford® Classic Mobile Lifts

Mini 140
Midi 180
Major 200
Maxi 180

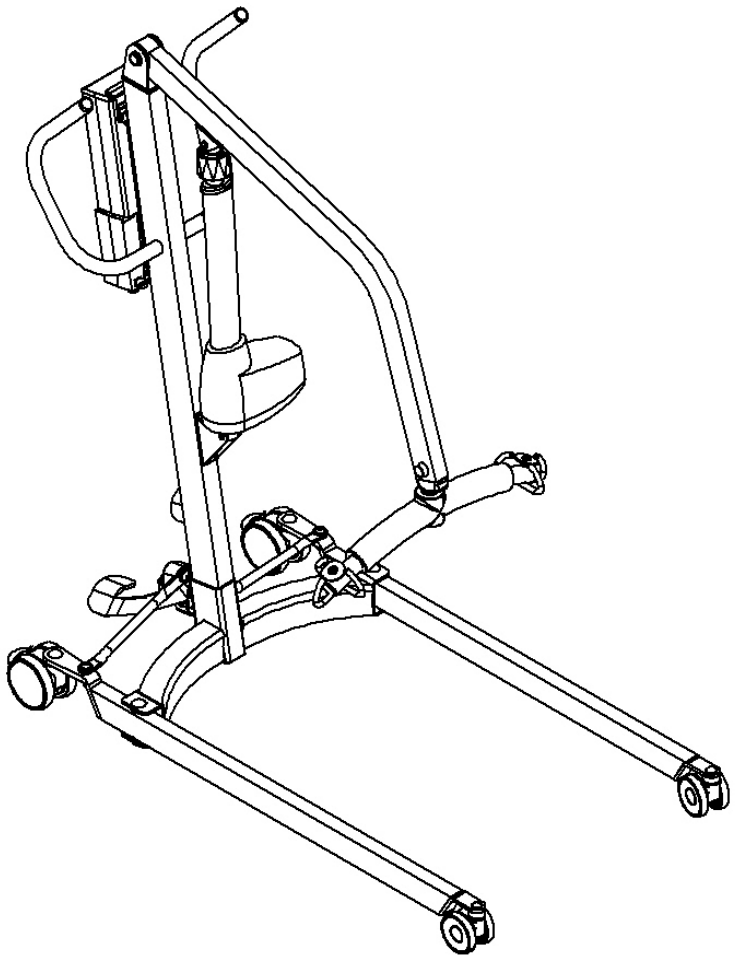

NO	PART NUMBER	DESCRIPTION	QTY
1	39001256	CLASSIC FRONT CASTORS (INC FIXINGS) (75mm castor x2, M8 Nyloc nut x2, M8 csks screw x2 & 19mm screw cover x2)	2
2	39001257	CLASSIC REAR CASTORS (INC FIXINGS) (100mm castor x2, M10 Nyloc nut x2, M10 csk screw x2 & 25mm screw cover x2)	2
3	31009213	MINI 140 LEG	1
4	39001192	MINI140/MIDI180 CROSS MEMBER INC FIXINGS (M12 csk screw x2, M6 hex screw x1, Anti-reverse bar x1, Brass bearing washer x4, leg compression sleeve x2, 25mm screw cover x2, Acetal wear washer x1, M16 Binx nut x1, Tie rod sleeve x2, M12 nylon washer x4 & M10 bttn screw x2)	1
5	39001191	MINI 140/MIDI 180 TIE RODS WITH FIXINGS (PAIR) (Tie rod LH x1, tie rod RH x1, M10 button hd screw x2, M8 button HD screw x2, M12 Nylon washer x8, Tie rod sleeve x4)	1
6	39001188	MINI 140/MIDI 180 FOOT PEDAL ASSEMBLY (Pedal assembly x1, M10 Button head screw x2, Tie rod sleeve x2, nylon washer x4)	1
7	39001393	LEG MECHANISM ASSEMBLY (Leg mechanism x1, M10 Button head screw x2, Tie rod sleeve x2, nylon washer x4) ***Electric leg models only***	1
-	39001189	CLASSIC ADHESIVE FOOT PEDAL PADS (NOT SHOWN)	20
-	39001190	CLASSIC FOOT PEDAL FASTENING KIT (M16 binx nut x1, Acetal wear washer x1, M12 Nylon washer x8, Mast locking knob x1, M10 button hd screw x2, M8 button hd screw x2, Foot pedal cover x1,Tie rod sleeve x4) (NOT SHOWN)	1
-	39001181	CLASSIC FOOT PEDAL PIVOT COVER (NOT SHOWN)	20
8	39001260	MINI 140 MAST (INC FIXINGS) [Mini mast fabrication x1, Fulcrum pin x1, 10mm external circlip x2, No8 pozi pan/tap screw x3, M8 csk screw x2, push handle end cap x2, boom retainer washer x2, boom fulcrum bush x1, Mounting bracket x1, boom fulcrum pin end cap x2, boom fulcrum pin x1, 19mm screw cover x2 & Mast decals]	1
9	39001258	MINI 140 BOOM (INC FIXINGS) (Mini Boom fabrication x1, Boom retainer washer x2, Boom fulcrum pin end cap x2, Boom fulcrum bush x1, Boom fulcrum pin x1, M8 csk screw x2, 19mm screw cover x2, Boom end cap x1, plastic cap x2, 10mm external circlip x4, Fulcrum pin x1, Cap retaining washer x2 & Boom decals)	1
10	39001200	MINI 140/MIDI 180 TOP FIXING KIT (Boom retainer washer x2, Boom fulcrum bush x1, Boom fulcrum pin x1, M8 csk screw x2, Boom fulcrum pin end cap x2, Fulcrum pin x3, cap retaining washer x2, 10mm circlip x6, Plastic cap x2, Push handle end stop x2, 19mm screw cover x2, Boom end cap x1)	1
11	39001199	MINI 140/MIDI 180 BASE FIXING KIT (M10 button hd screw x2, M8 button HD screw x2, M12 Nylon washer x8, Tie rod sleeve x4, M16 binx nut x1, Acetal wear washer x1, Mast locking knob x1, Foot pedal cover x1, M10 csk screw x2, 19mm screw cover x2, 25mm screw cover x2, M10 Nyloc nut x2, M8 Nyloc nut x2, Brass leg bearing washer x4, Leg compression sleeve x2, M12 csk screw x2, M10 Nyloc nut x2)	1
12	39001273	MINI 140 HYDRAULIC PUMP (INC FIXINGS) (Mini Hydraulic Pump x1, Fulcrum pin x2 & 10mm external circlip x4)	1
13	39001270	MINI 140 ACTUATOR LA31 (INC FIXINGS) (LA31 300mm stroke x1, Fulcrum pin x2, 10mm external circlips x4)	1
14	39001396	LEG ACTUATOR (INC FIXING) (Set pin, nylon spacer, nylon washer, spring washer) ***Electric leg models only***	1
15	39001398	LOWER ACTUATOR FIXING KIT ***Electric leg models only***	10
16	39001167	SMART MONITOR CONTROL BOX - 1 CHANNEL	1
	39001370	SMART MONITOR CONTROL BOX - 2 CHANNEL ***Electric leg models only***	1
17	39001180	SMART MONITOR USER HANDSET - 1 CHANNEL	1
	39001394	SMART MONITOR USER HANDSET - 2 CHANNEL ***Electric leg models only***	1
-	39001178	SMART MONITOR ACTUATOR RESET HANDSET (NOT SHOWN)	1
-	39001179	SMART MONITOR CALIBRATION HANDSET (NOT SHOWN)	1
18	11012180	BATTERY PACK 24V RECHARGEABLE	1
19	39001201	CLASSIC MOUNTING BRACKET (INC FIXINGS) (Mounting bracket x1, No8 * Pozi pans/tap screw x3)	1
20	39001183	CLASSIC CHARGER & STAND ASSEMBLY WITH UK LEAD	1
-	11012183	CHARGER LEAD - UK (NOT SHOWN)	1
-	11012184	CHARGER LEAD - EU (NOT SHOWN)	1
-	11012182	CHARGER LEAD - US (NOT SHOWN)	1
-	11013804	CHARGER LEAD - AU (NOT SHOWN)	1
21	31009237	CLASSIC SMALL SPREADER BAR	1
22	31009196	CLASSIC STANDARD SPREADER BAR	1
23	31009197	CLASSIC LARGE SPREADER BAR	1
-	11014250	CLASSIC STANDARD SPREADER BAR COVER (NOT SHOWN)	1
-	39001171	MINI 140/MIDI 180 SPREADER BAR FIXING KIT (Midi/Mini Boom end cap x1, Fulcrum pin x1, 10mm circlips x2, Cap retaining washer x2, Plastic cap x2, Hook shaft washer x5 & O-ring x5) (NOT SHOWN)	1
24	39001304	CLASSIC SPREADER BAR SLING RETAINING WASHER KIT (Retaining washer x2, m6 screw x2, spring x2, spacing post x2, Spreader bar wear washer x1, Spreader bar O ring x1)	1
-	39001279	CLASSIC SPREADER BAR FULCRUM PIN CAP AND RETAINING WASHERS (NOT SHOWN)	20
-	11014467	MINI 140 ELECTRIC DECAL SET (NOT SHOWN)	1
-	11014482	MINI 140 HYDRAULIC DECAL SET (NOT SHOWN)	1

Continued >

NO	PART NUMBER	DESCRIPTION	QTY
-	39001198	CLASSIC CIRCLIPS (NOT SHOWN)	100
25	39001182	CLASSIC PUSH HANDLE END CAPS	20
26	39001276	MINI 140/MIDI 180 BOOM END CAPS	20
-	39001277	CLASSIC 19MM GREY SCREW COVERS (NOT SHOWN)	20
-	39001278	CLASSIC 25MM GREY SCREW COVERS (NOT SHOWN)	12
-	39001397	RECTANGULAR TUBE INSERT FOR LEG ACTUATOR BRACKET - WHITE (NOT SHOWN) ***Electric leg models only***	10
-	39001399	19MM UNI CAP - WHITE (NOT SHOWN) ***Electric leg models only***	10
-	11014212X10	BRASS LEG BEARING WASHER	10

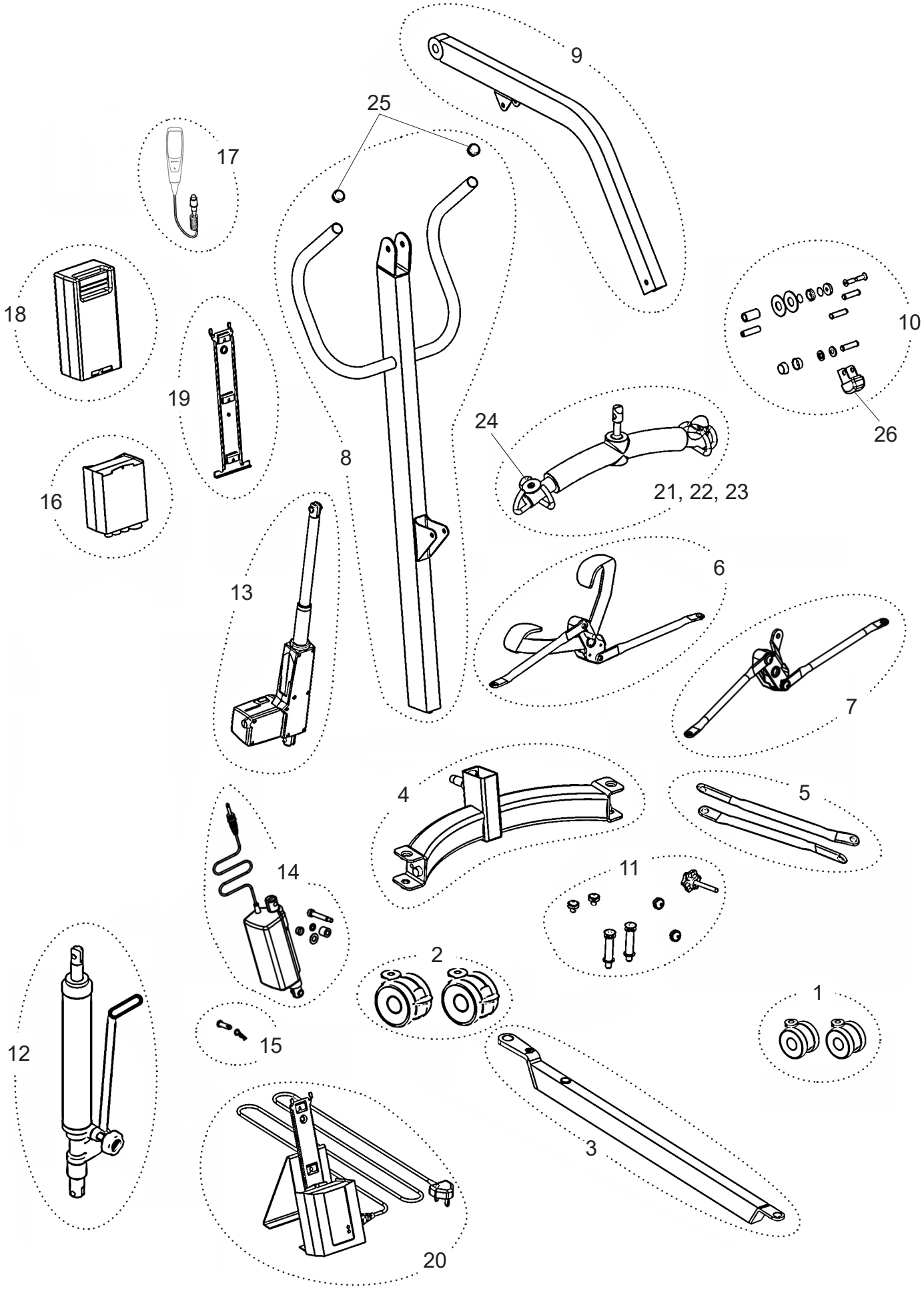
9
25
17
18
19
8
10
26
24
21, 22, 23
16
6
13
7
4
5
14
11
2
1
12
15
3
20

NO	PART NUMBER	DESCRIPTION	QTY
1	39001256	CLASSIC FRONT CASTORS (INC FIXINGS) (75mm castor x2, M8 Nyloc nut x2, M8 csks screw x2 & 19mm screw cover x2)	2
2	39001257	CLASSIC REAR CASTORS (INC FIXINGS) (100mm castor x2, M10 Nyloc nut x2, M10 csk screw x2 & 25mm screw cover x2)	2
3	31009203	MIDI 180 LEG	1
4	39001192	MINI140/MIDI180 CROSS MEMBER INC FIXINGS (M12 csk screw x2, M6 hex screw x1, Anti-reverse bar x1, Brass bearing washer x4, leg compression sleeve x2, 25mm screw cover x2, Acetal wear washer x1, M16 Binx nut x1, Tie rod sleeve x2, M12 nylon washer x4 & M10 bttn screw x2)	1
5	39001191	MINI 140/MIDI 180 TIE RODS WITH FIXINGS (PAIR) (Tie rod LH x1, tie rod RH x1, M10 button hd screw x2, M8 button HD screw x2, M12 Nylon washer x8, Tie rod sleeve x4)	1
6	39001188	MINI 140/MIDI 180 FOOT PEDAL ASSEMBLY (Foot pedal assembly x1, M10 Button head screw x2, Tie rod sleeve x2, Nylon washer x4)	1
7	39001393	LEG MECHANISM ASSEMBLY (Leg mechanism x1, M10 Button head screw x2, Tie rod sleeve x2, nylon washer x4) ***Electric leg models only***	1
-	39001189	CLASSIC ADHESIVE FOOT PEDAL PADS (NOT SHOWN)	20
-	39001190	CLASSIC FOOT PEDAL FASTENING KIT (M16 binx nut x1, Acetal wear washer x1, M12 Nylon washer x8, Mast locking knob x1, M10 button hd screw x2, M8 button hd screw x2, Foot pedal cover x1,Tie rod sleeve x4) (NOT SHOWN)	1
-	39001181	CLASSIC FOOT PEDAL PIVOT COVER (NOT SHOWN)	20
8	39001176	MIDI 180 MAST (INC FIXINGS) (Midi mast fabrication x1, Fulcrum pin x1, 10mm external circlip x4, No8 pozi pan/tap screw x3, M8 csk screw x2, Push handle end cap x2, Boom retainer washer x2, Boom fulcrum bush x1, Mounting bracket x1, Boom fulcrum pin end cap x2, Boom fulcrum pin x1, 19mm screw cover x2 & Mast decals)	1
9	39001175	MIDI 180 BOOM (INC FIXINGS) (Midi boom fabrication x1, boom retainer washer x2, boom fulcrum pin end cap x2, boom fulcrum bush x1, boom fulcrum pin x1, M8 csk screw x2, 19mm screw cover x2, boom end cap x1, Plastic cap x2, 10mm external circlip x4, Fulcrum pin x1, Cap retaining washer x2 & boom decals)	1
10	39001200	MINI 140/MIDI 180 TOP FIXING KIT (Boom retainer washer x2, Boom fulcrum bush x1, Boom fulcrum pin x1, M8 csk screw x2, Boom fulcrum pin end cap x2, Fulcrum pin x3, cap retaining washer x2, 10mm circlip x6, Plastic cap x2, Push handle end stop x2, 19mm screw cover x2, Boom end cap x1)	1
11	39001199	MINI 140/MIDI 180 BASE FIXING KIT (M10 button hd screw x2, M8 button HD screw x2, M12 Nylon washer x8, Tie rod sleeve x4, M16 binx nut x1, Acetal wear washer x1, Mast locking knob x1, Foot pedal cover x1, M10 csk screw x2, 19mm screw cover x2, 25mm screw cover x2, M10 Nyloc nut x2, M8 Nyloc nut x2, Brass leg bearing washer x4, Leg compression sleeve x2, M12 csk screw x2, M10 Nyloc nut x2)	1
12	39001272	MIDI 180 HYDRAULIC PUMP (INC FIXINGS) (Midi Hydraulic Pump x1, Fulcrum pin x2 & 10mm external circlip x4)	1
13	39001177	MIDI 180 ACTUATOR LA44 (INC FIXINGS) (LA44 250mm stroke x1, Fulcrum pin x2, 10mm external circlip x4, LA44 Lead x1, emergency descent decal x1)	1
-	11013922	ACTUATOR POWER LEAD (LA44) (NOT SHOWN)	1
14	39001396	LEG ACTUATOR (INC FIXING) (Set pin, nylon spacer, nylon washer, spring washer) ***Electric leg models only***	1
15	39001398	LOWER ACTUATOR FIXING KIT ***Electric leg models only***	10
16	39001167	SMART MONITOR CONTROL BOX - 1 CHANNEL	1
	39001370	SMART MONITOR CONTROL BOX - 2 CHANNEL ***Electric leg models only***	1
17	39001180	SMART MONITOR USER HANDSET - 1 CHANNEL	1
	39001394	SMART MONITOR USER HANDSET - 2 CHANNEL ***Electric leg models only***	1
-	39001178	SMART MONITOR ACTUATOR RESET HANDSET (NOT SHOWN)	1
-	39001179	SMART MONITOR CALIBRATION HANDSET (NOT SHOWN)	1
18	11012180	BATTERY PACK 24V RECHARGEABLE	1
19	39001201	CLASSIC MOUNTING BRACKET (INC FIXINGS) (Mounting bracket x1, No8 * Pozi pans/tap screw x3)	1
20	39001183	CLASSIC CHARGER & STAND ASSEMBLY WITH UK LEAD	1
-	11012183	CHARGER LEAD - UK (NOT SHOWN)	1
-	11012184	CHARGER LEAD - EU (NOT SHOWN)	1
-	11012182	CHARGER LEAD - US (NOT SHOWN)	1
-	11013804	CHARGER LEAD - AU (NOT SHOWN)	1
21	31009237	CLASSIC SMALL SPREADER BAR	1
22	31009196	CLASSIC STANDARD SPREADER BAR	1
23	31009197	CLASSIC LARGE SPREADER BAR	1
-	11014250	CLASSIC STANDARD SPREADER BAR COVER (NOT SHOWN)	1
-	39001171	MINI 140/MIDI 180 SPREADER BAR FIXING KIT (Midi/Mini Boom end cap x1, Fulcrum pin x1, 10mm circlips x2, Cap retaining washer x2, Plastic cap x2, Hook shaft washer x5 & O-ring x5) (NOT SHOWN)	1
24	39001304	CLASSIC SPREADER BAR SLING RETAINING WASHER KIT (Retaining washer x2, m6 screw x2, spring x2, spacing post x2, Spreader bar wear washer x1, Spreader bar O ring x1)	1
-	39001279	CLASSIC SPREADER BAR FULCRUM PIN CAP AND RETAINING WASHERS (NOT SHOWN)	20
-	11014468	MIDI 180 ELECTRIC DECAL SET (NOT SHOWN)	1

Continued >

NO	PART NUMBER	DESCRIPTION	QTY
-	11014483	MIDI 180 HYDRAULIC DECAL SET (NOT SHOWN)	1
-	39001198	CLASSIC CIRCLIPS (NOT SHOWN)	100
25	39001182	CLASSIC PUSH HANDLE END CAPS	20
26	39001276	MINI 140/MIDI 180 BOOM END CAP	20
-	39001277	CLASSIC 19MM GREY SCREW COVERS (NOT SHOWN)	20
-	39001278	CLASSIC 25MM GREY SCREW COVERS (NOT SHOWN)	12
-	39001397	RECTANGULAR TUBE INSERT FOR LEG ACTUATOR BRACKET - WHITE (NOT SHOWN) ***Electric leg models only***	10
-	39001399	19MM UNI CAP - WHITE (NOT SHOWN) ***Electric leg models only***	10
-	11014212X10	BRASS LEG BEARING WASHER	10

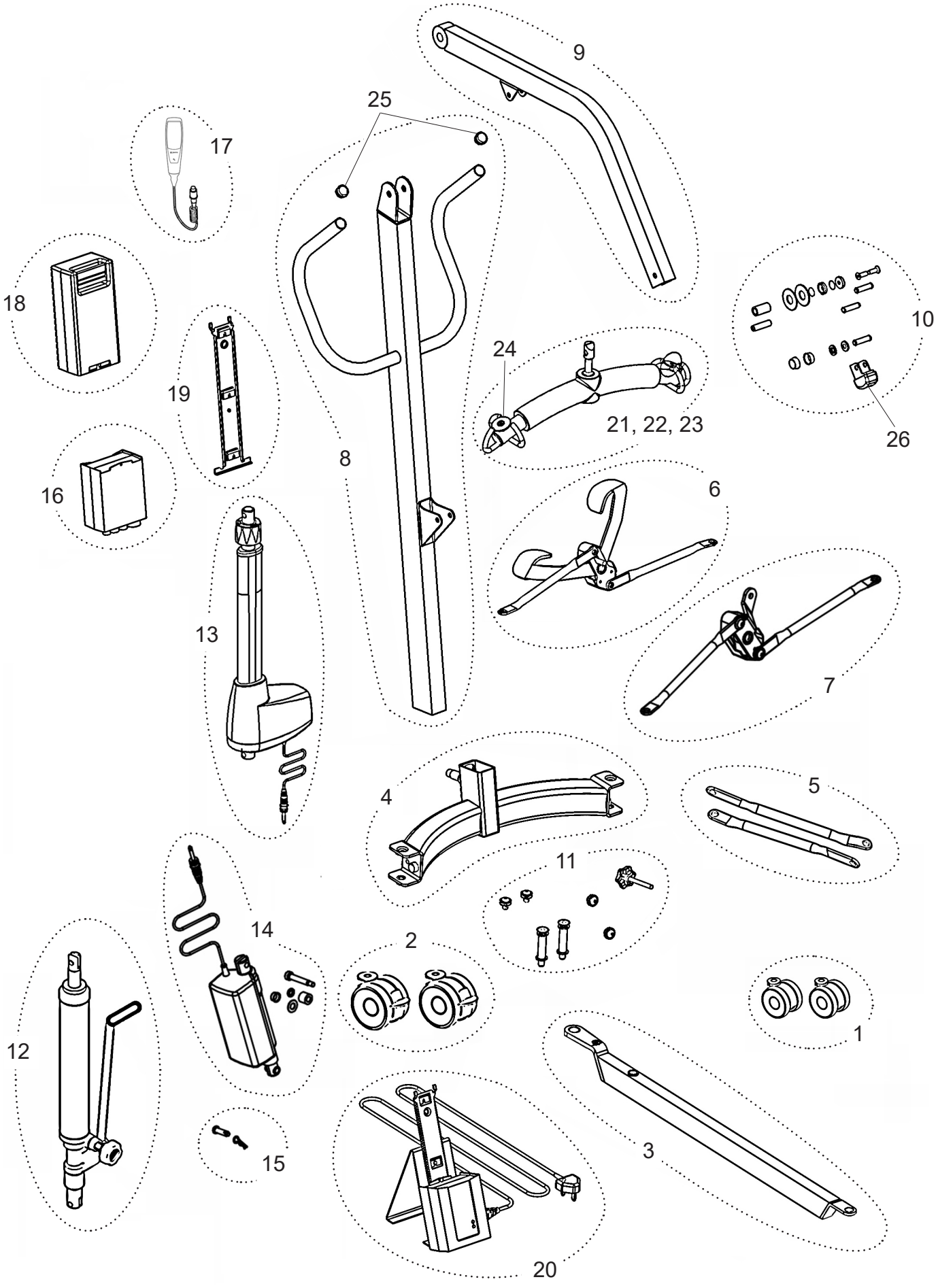
9
25
17
18
19
8
24
21, 22, 23
10
26
16
6
13
7
4
5
11
14
2
1
12
3
15
20

NO	PART NUMBER	DESCRIPTION	QTY
1	39001256	CLASSIC FRONT CASTORS (INC FIXINGS) (75mm castor x2, M8 Nyloc nut x2, M8 csks screw x2 & 19mm screw cover x2)	2
2	39001257	CLASSIC REAR CASTORS (INC FIXINGS) (100mm castor x2, M10 Nyloc nut x2, M10 csk screw x2 & 25mm screw cover x2)	2
3	31009208	MAJOR 200/MAXI 180 LEG	1
4	39001265	MAJOR200/MAXI180 CROSSMEMBER INC FIXINGS (M12 csk screw x2, M6 hex screw x1, Anti-reverse bar x1, Brass bearing washer x4, leg compression sleeve x2, 25mm screw cover x2, Acetal wear washer x1, M16 Binx nut x1, Tie rod sleeve x2, M12 nylon washer x4 & M10 bttn screw x2)	1
5	39001264	MAJOR 200/MAXI 180 TIE RODS WITH FIXINGS (PAIR) (Tie rod LH x1, tie rod RH x1, M10 button hd screw x2, M8 button HD screw x2, M12 Nylon washer x8, Tie rod sleeve x4)	1
6	39001275	MAJOR 200/MAXI 180 FOOT PEDAL ASSEMBLY (Foot pedal assembly x1, M10 Button head screw x2, Tie rod sleeve x2, Nylon washer x4)	1
7	39001405	LEG MECHANISM ASSEMBLY (Leg mechanism x1, M10 Button head screw x2, Tie rod sleeve x2, nylon washer x4) ***Electric leg models only***	1
-	39001189	CLASSIC ADHESIVE FOOT PEDAL PADS (NOT SHOWN)	20
-	39001190	CLASSIC FOOT PEDAL FASTENING KIT (M16 binx nut x1, Acetal wear washer x1, M12 Nylon washer x8, Mast locking knob x1, M10 button hd screw x2, M8 button hd screw x2, Foot pedal cover x1,Tie rod sleeve x4) (NOT SHOWN)	1
-	39001181	CLASSIC FOOT PEDAL PIVOT COVER (NOT SHOWN)	20
8	39001262	MAJOR 200 MAST (INC FIXINGS) (Major Mast Fabrication x1, Fulcrum pin x1, 10mm external circlip x4, No8 pozi pan/tap screw x3, M8 csk screw x2, push handle end cap x2, boom retainer washer x2, boom fulcrum bush x1,Mounting bracket x1, boom fulcrum pin end cap x2, boom fulcrum pin x1, 19mm screw cover x2 & Mast decals)	1
9	39001259	MAJOR 200/MAXI 180 BOOM (INC FIXINGS) (Major/Maxi Boom fabrication x1, Boom retainer washer x2, Boom fulcrum pin end cap x2, Boom fulcrum bush x1, boom fulcrum pin x1, M8 csk screw x2, 19mm screw cover x2, Boom end cap x1, plastic cap x2, 10mm external circlip x4, Fulcrum pin x1, Cap retaining washer x2 & Boom decals)	1
10	39001268	MAJOR 200/MAXI 180 TOP FIXING KIT (Boom retainer washer x2, Boom fulcrum bush x1, Boom fulcrum pin x1, M8 csk screw x2, Boom fulcrum pin end cap x2, Fulcrum pin x3, cap retaining washer x2, 10mm circlip x6, Plastic cap x2, Push handle end stop x2, 19mm screw cover x2, Boom end cap x1)	1
11	39001269	MAJOR 200/MAXI 180 BASE FIXING KIT (M10 button hd screw x2, M8 button HD screw x2, M12 Nylon washer x8, Tie rod sleeve x4, M16 binx nut x1, Acetal wear washer x1, Mast locking knob x1, Foot pedal cover x1, M10 csk screw x2, 19mm screw cover x2, 25mm screw cover x2, M10 Nyloc nut x2, M8 Nyloc nut x2, Brass leg bearing washer x4, Leg compression sleeve x2, M12 csk screw x2, M10 Nyloc nut x2)	1
12	39001271	MAJOR 200 HYDRAULIC PUMP (INC FIXINGS) (Major Hydraulic Pump x1, Fulcrum pin x2 & 10mm external circlip x4)	1
13	39001263	MAJOR200/MAXI180 ACTUATOR LA44 (INC FIXINGS) (LA44 300mm stroke x1, Fulcrum pin x2, 10mm external circlip x4, LA44 Lead x1, emergency descent decals x1)	1
-	11013922	ACTUATOR POWER LEAD (LA44) (NOT SHOWN)	1
14	39001396	LEG ACTUATOR (INC FIXING) (Set pin, nylon spacer, nylon washer, spring washer) ***Electric leg models only***	1
15	39001398	LOWER ACTUATOR FIXING KIT ***Electric leg models only***	10
16	39001167	SMART MONITOR CONTROL BOX - 1 CHANNEL	1
	39001370	SMART MONITOR CONTROL BOX - 2 CHANNEL ***Electric leg models only***	1
17	39001180	SMART MONITOR USER HANDSET - 1 CHANNEL	1
	39001394	SMART MONITOR USER HANDSET - 2 CHANNEL ***Electric leg models only***	1
-	39001178	SMART MONITOR ACTUATOR RESET HANDSET (NOT SHOWN)	1
-	39001179	SMART MONITOR CALIBRATION HANDSET (NOT SHOWN)	1
18	11012180	BATTERY PACK 24V RECHARGEABLE	1
19	39001201	CLASSIC MOUNTING BRACKET (INC FIXINGS) (Mounting bracket x1, No8 * Pozi pans/tap screw x3)	1
20	39001183	CLASSIC CHARGER & STAND ASSEMBLY WITH UK LEAD	1
-	11012183	CHARGER LEAD - UK (NOT SHOWN)	1
-	11012184	CHARGER LEAD - EU (NOT SHOWN)	1
-	11012182	CHARGER LEAD - US (NOT SHOWN)	1
-	11013804	CHARGER LEAD - AU (NOT SHOWN)	1
21	31009237	CLASSIC SMALL SPREADER BAR	1
22	31009196	CLASSIC STANDARD SPREADER BAR	1
23	31009197	CLASSIC LARGE SPREADER BAR	1
-	11014250	CLASSIC STANDARD SPREADER BAR COVER (NOT SHOWN)	1
-	39001172	MAJOR 200/MAXI 180 S / BAR FIXING KIT (Major/Maxi Boom end cap x1, Fulcrum pin x1, 10mm circlips x2, Cap retaining washer x2, Plastic cap x2, Hook shaft washer x5 & O-ring x5) (NOT SHOWN)	1
24	39001304	CLASSIC SPREADER BAR SLING RETAINING WASHER KIT (Retaining washer x2, m6 screw x2, spring x2, spacing post x2, Spreader bar wear washer x1, Spreader bar O ring x1)	1
-	39001279	CLASSIC SPREADER BAR FULCRUM PIN CAP AND RETAINING WASHERS (NOT SHOWN)	20
-	11014470	MAJOR 200 ELECTRIC DECAL SET (NOT SHOWN)	1

Continued >

NO	PART NUMBER	DESCRIPTION	QTY
-	11014484	MAJOR 200 HYDRAULIC DECAL SET (NOT SHOWN)	1
-	39001198	CLASSIC CIRCLIPS (NOT SHOWN)	100
25	39001182	CLASSIC PUSH HANDLE END CAPS	20
26	39001280	MAJOR 200/MAXI 180 BOOM END CAP	20
-	39001277	CLASSIC 19MM GREY SCREW COVERS (NOT SHOWN)	20
-	39001278	CLASSIC 25MM GREY SCREW COVERS (NOT SHOWN)	12
-	39001397	RECTANGULAR TUBE INSERT FOR LEG ACTUATOR BRACKET - WHITE (NOT SHOWN) ***Electric leg models only***	10
-	39001399	19MM UNI CAP - WHITE (NOT SHOWN) ***Electric leg models only***	10
27	31009215	STRAIGHT LINE STEERING DEVICE	1
-	11014212X10	BRASS LEG BEARING WASHER	10

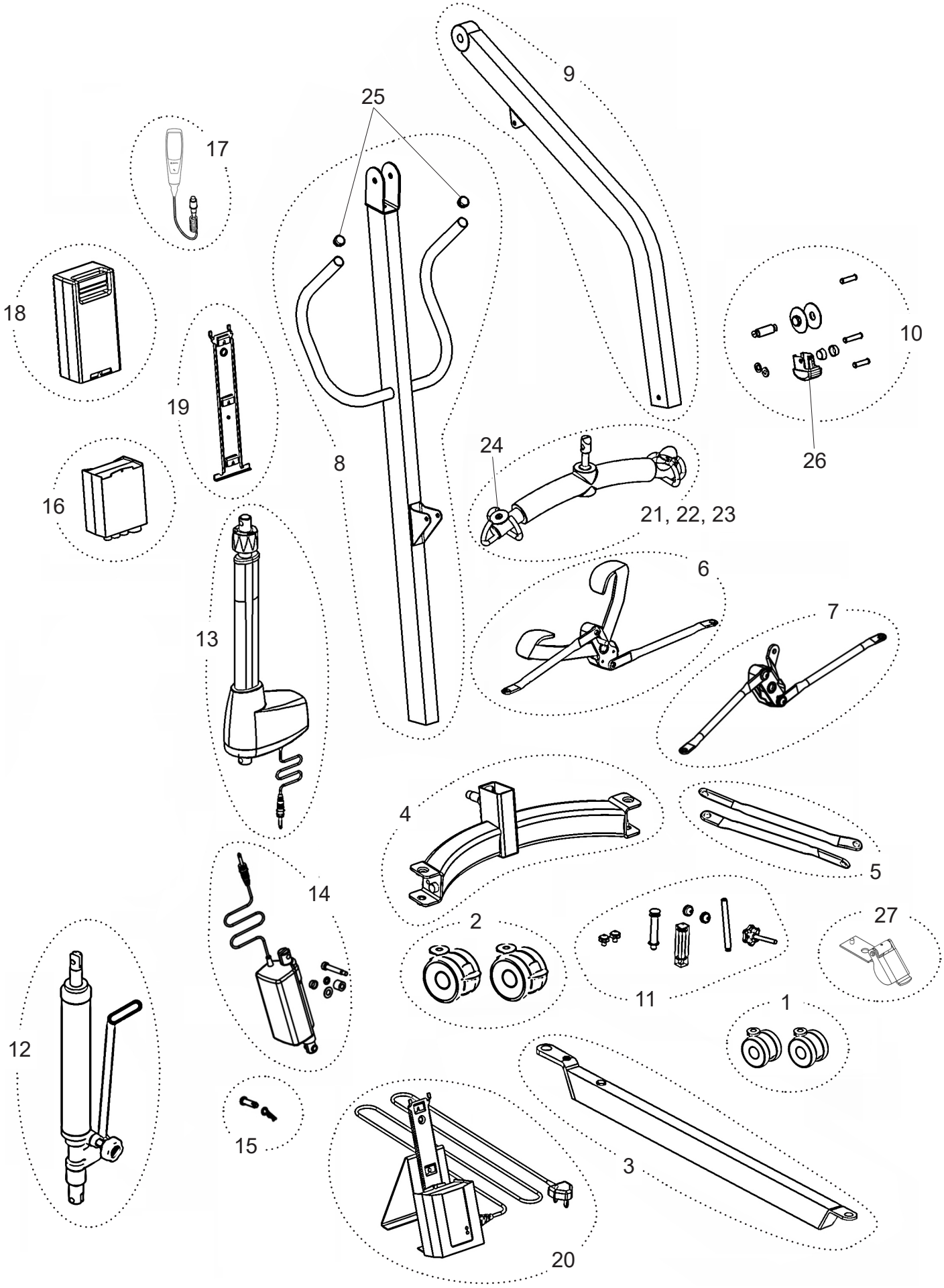
9
25
17
18
19
8
10
26
24
21, 22, 23
16
6
7
13
4
5
14
2
27
11
1
12
15
3
20

NO	PART NUMBER	DESCRIPTION	QTY
1	39001256	CLASSIC FRONT CASTORS (INC FIXINGS) (75mm castor x2, M8 Nyloc nut x2, M8 csks screw x2 & 19mm screw cover x2)	2
2	39001257	CLASSIC REAR CASTORS (INC FIXINGS) (100mm castor x2, M10 Nyloc nut x2, M10 csk screw x2 & 25mm screw cover x2)	2
3	31009208	MAJOR 200/MAXI 180 LEG	1
4	39001265	MAJOR200/MAXI180 CROSSMEMBER INC FIXINGS (M12 csk screw x2, M6 hex screw x1, Anti-reverse bar x1, Brass bearing washer x4, leg compression sleeve x2, 25mm screw cover x2, Acetal wear washer x1, M16 Binx nut x1, Tie rod sleeve x2, M12 nylon washer x4 & M10 bttn screw x2)	1
5	39001264	MAJOR 200/MAXI 180 TIE RODS WITH FIXINGS (PAIR) (Tie rod LH x1, tie rod RH x1, M10 button hd screw x2, M8 button HD screw x2, M12 Nylon washer x8, Tie rod sleeve x4)	1
6	39001275	MAJOR 200/MAXI 180 FOOT PEDAL ASSEMBLY (Foot pedal assembly x1, M10 Button head screw x2, Tie rod sleeve x2, nylon washer x4)	1
7	39001405	LEG MECHANISM ASSEMBLY (Leg mechanism x1, M10 Button head screw x2, Tie rod sleeve x2, nylon washer x4) ***Electric leg models only***	1
-	39001189	CLASSIC ADHESIVE FOOT PEDAL PADS (NOT SHOWN)	20
-	39001190	CLASSIC FOOT PEDAL FASTENING KIT (M16 binx nut x1, Acetal wear washer x1, M12 Nylon washer x8, Mast locking knob x1, M10 button hd screw x2, M8 button hd screw x2, Foot pedal cover x1,Tie rod sleeve x4) (NOT SHOWN)	1
-	39001181	CLASSIC FOOT PEDAL PIVOT COVER (NOT SHOWN)	20
8	39001261	MAXI 180 MAST (INC FIXINGS) (Maxi Mast Fabrication x1, Fulcrum pin x1, 10mm external circlip x4, No8 pozi pan/tap screw x3, M8 csk screw x2, push handle end cap x2, boom retainer washer x2, boom fulcrum bush x1, Mounting bracket x1, boom fulcrum pin end cap x2, boom fulcrum pin x1, 19mm screw cover x2 & Mast decals)	1
9	39001259	MAJOR 200/MAXI 180 BOOM (INC FIXINGS) (Major/Maxi Boom fabrication x1, Boom retainer washer x2, Boom fulcrum pin end cap x2, Boom fulcrum bush x1, boom fulcrum pin x1, M8 csk screw x2, 19mm screw cover x2, Boom end cap x1, plastic cap x2, 10mm external circlip x4, Fulcrum pin x1, Cap retaining washer x2 & Boom decals)	1
10	39001268	MAJOR 200/MAXI 180 TOP FIXING KIT (Boom retainer washer x2, Boom fulcrum bush x1, Boom fulcrum pin x1, M8 csk screw x2, Boom fulcrum pin end cap x2, Fulcrum pin x3, cap retaining washer x2, 10mm circlip x6, Plastic cap x2, Push handle end stop x2, 19mm screw cover x2, Boom end cap x1)	1
11	39001269	MAJOR 200/MAXI 180 BASE FIXING KIT (M10 button hd screw x2, M8 button HD screw x2, M12 Nylon washer x8, Tie rod sleeve x4, M16 binx nut x1, Acetal wear washer x1, Mast locking knob x1, Foot pedal cover x1, M10 csk screw x2, 19mm screw cover x2, 25mm screw cover x2, M10 Nyloc nut x2, M8 Nyloc nut x2, Brass leg bearing washer x4, Leg compression sleeve x2, M12 csk screw x2, M10 Nyloc nut x2)	1
12	39001263	MAJOR200/MAXI180 ACTUATOR LA44 (INC FIXINGS) (LA44 300mm stroke x1, Fulcrum pin x2, 10mm external circlip x4, LA44 Lead x1, emergency descent decals x1)	1
-	11013922	ACTUATOR POWER LEAD (LA44) (NOT SHOWN)	1
13	39001396	LEG ACTUATOR (INC FIXING) (Set pin, nylon spacer, nylon washer, spring washer) ***Electric leg models only***	1
14	39001398	LOWER ACTUATOR FIXING KIT ***Electric leg models only***	10
15	39001167	SMART MONITOR CONTROL BOX - 1 CHANNEL	1
	39001370	SMART MONITOR CONTROL BOX - 2 CHANNEL ***Electric leg models only***	1
16	39001180	SMART MONITOR USER HANDSET - 1 CHANNEL	1
	39001394	SMART MONITOR USER HANDSET - 2 CHANNEL ***Electric leg models only***	1
-	39001178	SMART MONITOR ACTUATOR RESET HANDSET (NOT SHOWN)	1
-	39001179	SMART MONITOR CALIBRATION HANDSET (NOT SHOWN)	1
17	11012180	BATTERY PACK 24V RECHARGEABLE	1
18	39001201	CLASSIC MOUNTING BRACKET (INC FIXINGS) (Mounting bracket x1, No8 * Pozi pans/tap screw x3)	1
19	39001183	CLASSIC CHARGER & STAND ASSEMBLY WITH UK LEAD	1
-	11012183	CHARGER LEAD - UK (NOT SHOWN)	1
-	11012184	CHARGER LEAD - EU (NOT SHOWN)	1
-	11012182	CHARGER LEAD - US (NOT SHOWN)	1
-	11013804	CHARGER LEAD - AU (NOT SHOWN)	1
20	31009237	CLASSIC SMALL SPREADER BAR	1
21	31009196	CLASSIC STANDARD SPREADER BAR	1
22	31009197	CLASSIC LARGE SPREADER BAR	1
-	11014250	CLASSIC STANDARD SPREADER BAR COVER (NOT SHOWN)	1
-	39001172	MAJOR 200/MAXI 180 SPREADER BAR FIXING KIT (Major/Maxi Boom end cap x1, Fulcrum pin x1, 10mm circlips x2, Cap retaining washer x2, Plastic cap x2, Hook shaft washer x5 & O-ring x5) (NOT SHOWN)	1
23	39001304	CLASSIC SPREADER BAR SLING RETAINING WASHER KIT (Retaining washer x2, m6 screw x2, spring x2, spacing post x2, Spreader bar wear washer x1, Spreader bar O ring x1)	1
-	39001279	CLASSIC SPREADER BAR FULCRUM PIN CAP AND RETAINING WASHERS (NOT SHOWN)	20
-	11014469	MAXI 180 DECAL SET (NOT SHOWN)	1

Continued >

NO	PART NUMBER	DESCRIPTION	QTY
-	39001198	CLASSIC CIRCLIPS (NOT SHOWN)	100
24	39001182	CLASSIC PUSH HANDLE END CAPS	20
25	39001280	MAJOR 200/MAXI 180 BOOM END CAP	20
-	39001277	CLASSIC 19MM GREY SCREW COVERS (NOT SHOWN)	20
-	39001278	CLASSIC 25MM GREY SCREW COVERS (NOT SHOWN)	12
-	39001397	RECTANGULAR TUBE INSERT FOR LEG ACTUATOR BRACKET - WHITE (NOT SHOWN) ***Electric leg models only***	10
-	39001399	19MM UNI CAP - WHITE (NOT SHOWN) ***Electric leg models only***	10
26	31009215	STRAIGHT LINE STEERING DEVICE	1
-	11014212X10	BRASS LEG BEARING WASHER	10

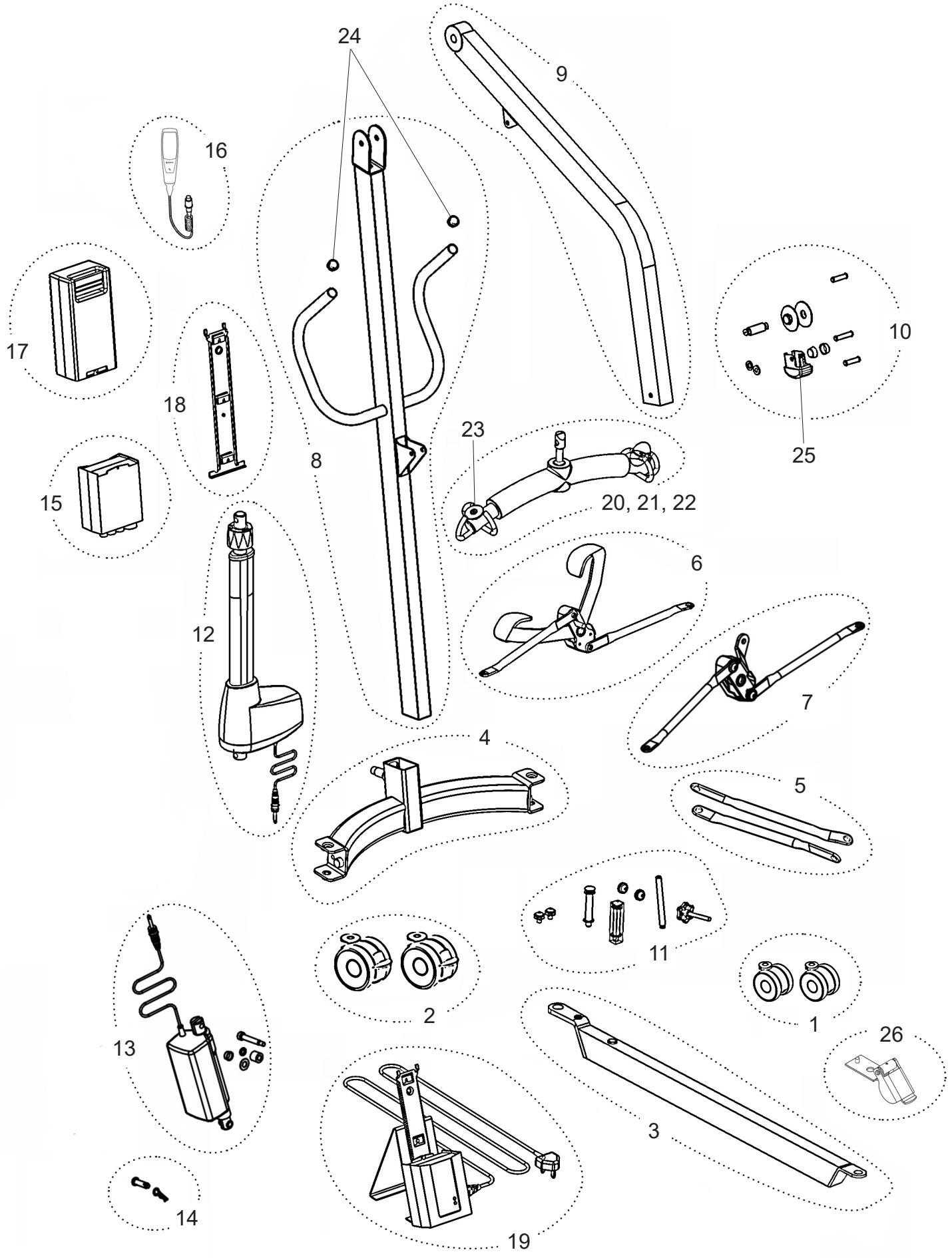
24
9
16
17
18
8
10
25
23
20, 21, 22
15
6
12
7
4
5
11
2
1
13
26
3
14
19

Joerns Oxford®

Joerns Healthcare Limited
Drakes Broughton Business Park, Worcester Road, Drakes Broughton
Pershore, Worcestershire, WR10 2AG United Kingdom
(T) 0344 811 1158
www.joerns.co.uk • email: info@joerns.co.uk

6130076 Rev G • DCO-000922
© 2024, Joerns Healthcare. All rights reserved.