JWB1997N/M/A/B

Non-isolated Buck LED Driver Regulator

Parameters Subject to Change Without Notice

DESCRIPTION

JW®B1997N/M/A/B is a non-isolated constant current LED regulator with high current accuracy which applies to step-down LED drivers. Operating in the boundary mode makes it high efficiency and low radiation. Patented algorithms ensure good current accuracy and excellent line/load regulations.

JWB1997N/M/A/B is supplied from the line directly without auxiliary winding or external capacitor, which can lower the system BOM cost.

With unique sampling techniques, JWB1997N/M/A/B has multi-protection functions which can largely enhance the safety and reliability of the system, including LED short protection and over-temperature protection.

Company's Logo is Protected, "JW" and "JOULWATT" are Registered Trademarks of JoulWatt technology Inc.

FEATURES

- 800V Bridge Rectifier Integrated
- 600V Low V_F Diode Integrated
- 500V MOSFET Integrated
- Excellent line/load regulation
- Boundary mode operation
- High efficiency
- LED short protection
- Over-temperature protection
- ASOP-7 package

APPLICATIONS

- DOB application

For 华锐电子 Use Only
JoulWatt Confidential

TYPICAL APPLICATION

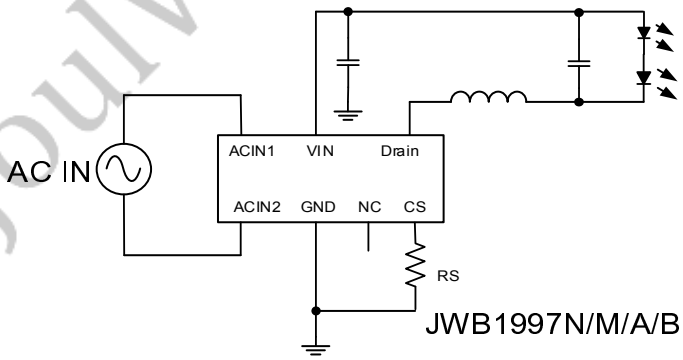

JoulWatt® Proprietary Information. Patent Protected.
Unauthorized Photocopy and Duplication Prohibited.

ORDER INFORMATION

DEVICE[1)]	PACKAGE	TOP MARKING[2)]
JWB1997NASOPC#TRPBF	ASOP-7	JWB1997N YW□□□□□
JWB1997MASOPC#TRPBF	ASOP-7	JWB1997M YW□□□□□
JWB1997AASOPC#TRPBF	ASOP-7	JWB1997A YW□□□□□
JWB1997BASOPC#TRPBF	ASOP-7	JWB1997B YW□□□□□

Note：

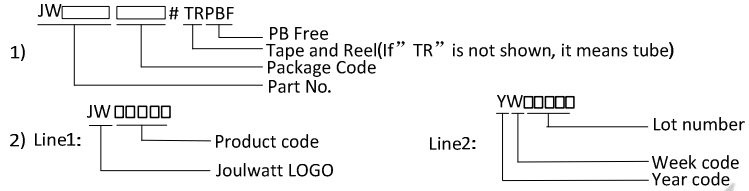

DEVICE INFORMATION

DEVICE	MOS BV	MOS RDSON	OUTPUT CURRENT
JWB1997NASOPC#TRPBF	500V	20	<120mA
JWB1997MASOPC#TRPBF	500V	13	<190mA
JWB1997AASOPC#TRPBF	500V	8	<240mA
JWB1997BASOPC#TRPBF	500V	4.4	<300mA

PIN CONFIGURATION

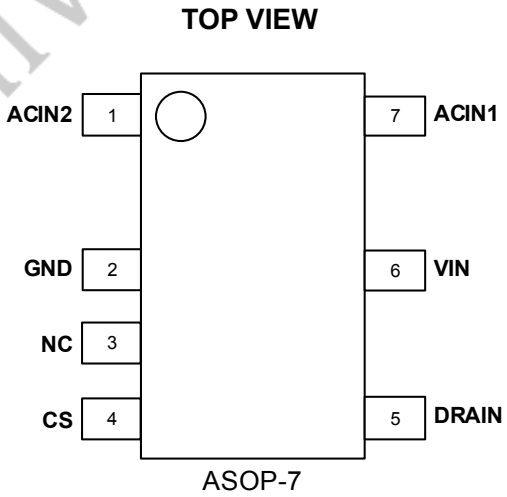

For 华钜电子 Use Only
JoulWatt Confidential

JoulWatt® Proprietary Information. Patent Protected.
Unauthorized Photocopy and Duplication Prohibited.

ABSOLUTE MAXIMUM RATING[1)]

VIN Voltage 700V
CS Voltage.....-0.3V to 8V
DRAIN Pin 500V
Junction Temperature[2)3)].....150ºC
Storage Temperature.....-65ºC to +150ºC

RECOMMENDED OPERATING CONDITIONS

VIN Voltage 400V
Operating Junction Temp. .....-25ºC to 125ºC

PN/Package	Limit Output Current (T_J=125℃) [4)]	Recommended MAX Output Current (T_J=125℃) [4)]
JWB1997N/ASOP-7	<200mA	120mA
JWB1997M/ASOP-7	<250mA	190mA
JWB1997A/ASOP-7	<350mA	240mA
JWB1997B/ASOP-7	<550mA	300mA

RECOMMENDED OUTPUT VOLTAGE

JWB1997N/M/A/B.....>15V

Note：

1) Exceeding these ratings may damage the device.

2) The JWB1997N/M/A/B guarantees robust performance from -40°C to 150°C junction temperature. The junction temperature range specification is assured by design, characterization and correlation with statistical process controls.

3) The JWB1997N/M/A/B includes thermal protection that is intended to protect the device in overload conditions. Thermal protection is active when junction temperature exceeds the maximum operating junction temperature. Continuous operation over the specified absolute maximum operating junction temperature may damage the device.

4) The maximum output current is recommended in the application according to chip junction temperature TJ=125℃ (chip case temperature difference about 20℃). The maximum output current could be increased properly if the heat dissipation is better.

For 华强电子 Use Only
JoulWatt Confidential

Unauthorized Photocopy and Duplication Prohibited.

ELECTRICAL CHARACTERISTICS

T_A=25℃, unless otherwise stated							
Item		**Symbol**	**Condition**	**Min.**	**Typ.**	**Max.**	**Units**
Threshold of VIN power on[5)]		V_{IN_ON}	V_{IN} rising		8		V
VIN Operation Current		I_{op}			80	100	uA
Reference Voltage		V_{REF}		388	400	412	mV
MOS Max ON Time		T_{ONMAX}		30	40	55	μs
MOS Min ON Time[5)]		T_{ONMIN}			0.4	0.8	μs
MOS Max OFF Time		T_{OFFMAX}		320	400	480	μs
Drain-source Voltage	JWB1997N/M/A/B	BV_{DSS}	Vg=0V Ids=250uA	500			V
MOS R_{DSON}	JWB1997N	R_{DS_ON}	Vg=15V Ids=0.5A		20	22	ohm
	JWB1997M				13	14	
	JWB1997A				8	9	
	JWB1997B				4.4	5.2	
DS Leakage Current	JWB1997N/M/A/B	I_{DSS}	Vg=0V Vds=500V		1	5	uA
Diode Reverse Recovery time[5)]		T_{RR}	I_F=0.5A,I_R=1A, I_{FF}=0.25A			35	ns
Freewheel Diode BV Voltage[5)]		V_{BRDSD}		600			V
Freewheel Diode Forward Voltage Drop[5)]		V_F	I_F=0.5A			1.68	V
Bridge Diode BV Voltage[5)]		V_{BR_BD}		800			V
Bridge Diode Forward Voltage Drop[5)]		V_{F_BD}	I_F=1A			1.1	V
Bridge Diode Peak Forward Surge Current 8.3ms Single Half Sine Wave		I_{FSM}			15		A
Thermal Protection Threshold[5)]		OTP_{CHIP}			120		℃

Notes:

5) Guaranteed by design

For 华钰电子 Use Only JoulWatt Confidential

PIN DESCRIPTION

Pin ASOP7	Name	Description
1,7	ACIN	AC voltage input.
2	GND	Chip ground
3	NC	Not Connected
4	CS	Current Sensing Pin
5	DRAIN	The drain of internal power MOSFET
6	VIN	Power supply

BLOCK DIAGRAM

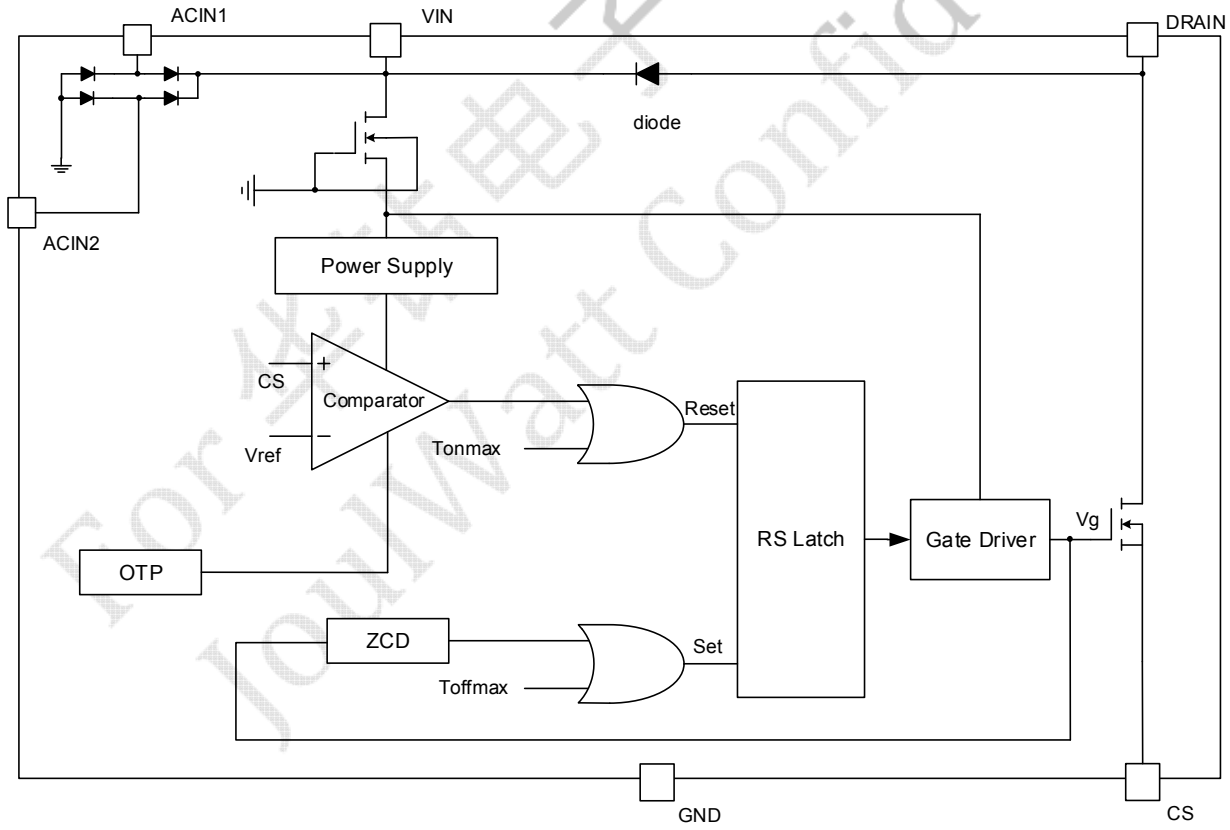

For 华信电子 Use Only
JoulWatt Confidential

JoulWatt® Proprietary Information. Patent Protected.
Unauthorized Photocopy and Duplication Prohibited.

FUNCTIONAL DESCRIPTION

The JWB1997N/M/A/B is a constant current LED regulator, which applies to non-isolation step-down LED system. JWB1997N/M/A/B can achieve excellent line and load regulation, high efficiency and low system cost with few peripheral components.

Start Up

When the VIN exceeds the turn-on threshold, the gate driver will start to switch after 400us delay.

Constant Current Control

JWB1997N/M/A/B controls the output current from the information of the current sensing resistor. The output LED average current can be calculated as:

$$I_{LED} = V_{REF} /(2\ R_{CS})$$

Where,

V_{REF} is the reference voltage;

R_{CS} – the sensing resistor connected between the PIN CS and chip GND.

The inductor current and V_{RS} waveforms are as follows:

Where，

V_{RS} – the voltage between PIN CS and chip GND.

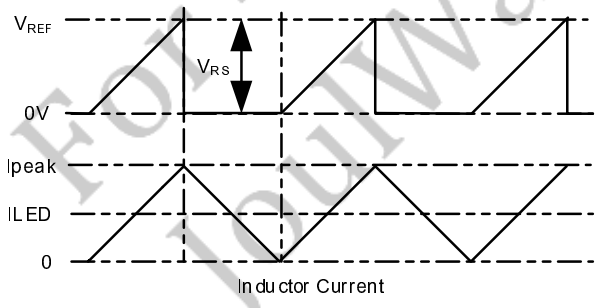

Critical Conduction Mode Operation

JWB1997N/M/A/B works in the critical conduction mode of the inductor current. When the power MOSFET turns on, the inductor current increases from zero linearly. The turn on time of the MOSFET can be calculated as:

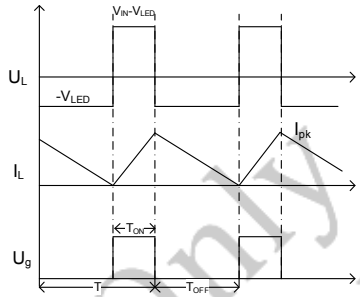

$$T_{ON} = 2\ I_{LED} \times L / (V_{IN} – V_{LED})$$

Where,

L –inductance.

I_{LED} – output led current.

V_{IN} – input voltage after rectification and filtering.

V_{LED} – output voltage.

When the power MOSFET turns off, the inductor current decreases. The power MOSFET turns on again when the inductor current is zero. The turn-off time of the MOSFET can be calculated as:

$$T_{OFF} = 2\ I_{LED} \times L / V_{LED}$$

JWB1997N/M/A/B works in quasi-resonant mode. When the inductor current decreases to zero, resonance takes place between the power inductor, MOSFET output capacitor and stray capacitor. JWB1997N/M/A/B can detect the zero-current signals of the inductor, and turn on the MOSFET in the valley, which can reduce the power loss and the EMI radiation. If JWB1997N/M/A/B cannot get the zero current signals, the turn off time will be changed to T_{OFFMAX}. The output voltage should be higher than recommended voltage in order to avoid the loss of zero current signals.

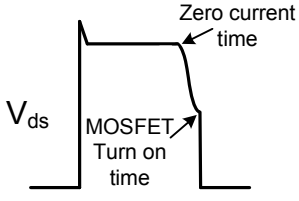

FOR 华钻电子 Use Only JoulWatt Confidential

Unauthorized Photocopy and Duplication Prohibited.

Over Temperature Protection

When the junction temperature is higher than OTP_{CHIP}, JWB1997N/M/A/B works in DCM by increasing the MOS OFF time to decrease the LED current and help the chip cooling.

LED Short Protection

When the output is shorted, JWB1997N/M/A/B stops switching for T_{OFFMAX} until the next pulse.

PCB Layout Guidelines

1. Make the area of the power loop as small as possible in order to reduce the EMI radiation.
2. JWB1997N/M/A/B should be kept away from noisy and heating components, such as power inductor.

For 华钻电子 Use Only
JoulWatt Confidential

JoulWatt® Proprietary Information. Patent Protected.
Unauthorized Photocopy and Duplication Prohibited.

APPLICATION REFERENCE

This reference design is suitable for 10~20W non-isolated Step-down LED driver, using JWB1997N/M/A/B, with high efficiency, excellent line regulation.

Reference ：

V_{IN}: 90VAC~260VAC

V_{OUT}: 80V

I_{OUT}: 200mA

PF: >0.5

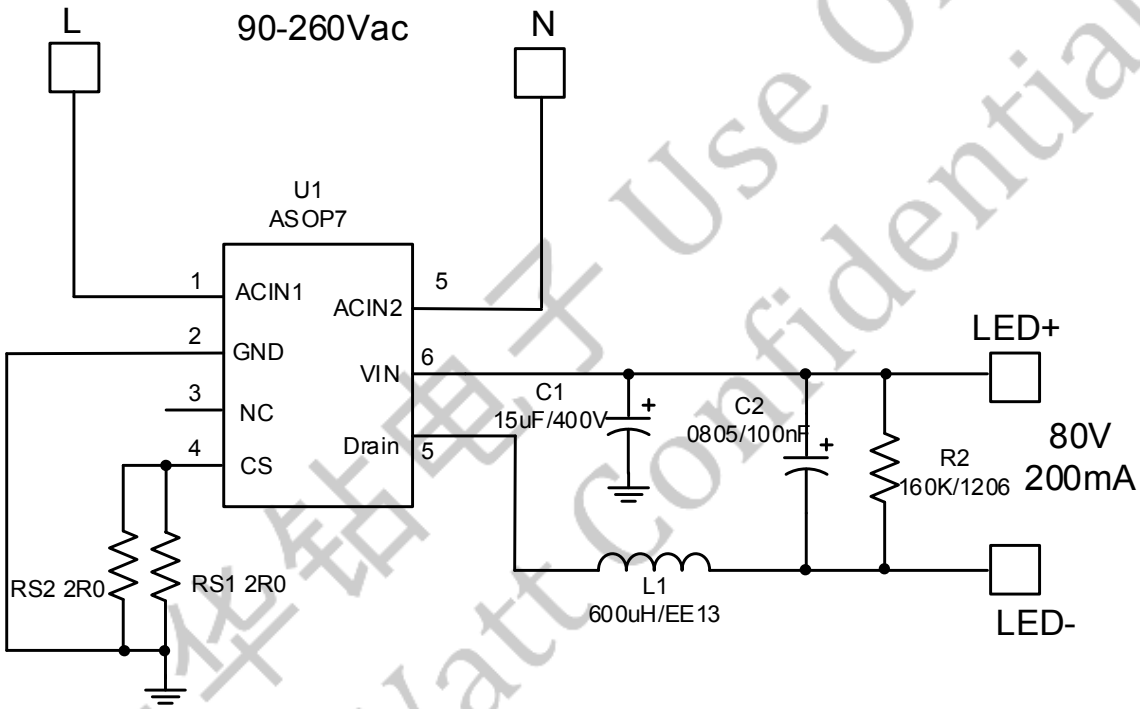

For华钻电子 Use Only
JoulWatt Confidential

JoulWatt® Proprietary Information. Patent Protected.
Unauthorized Photocopy and Duplication Prohibited.

PACKAGE OUTLINE

ASOP-7 UNIT: mm

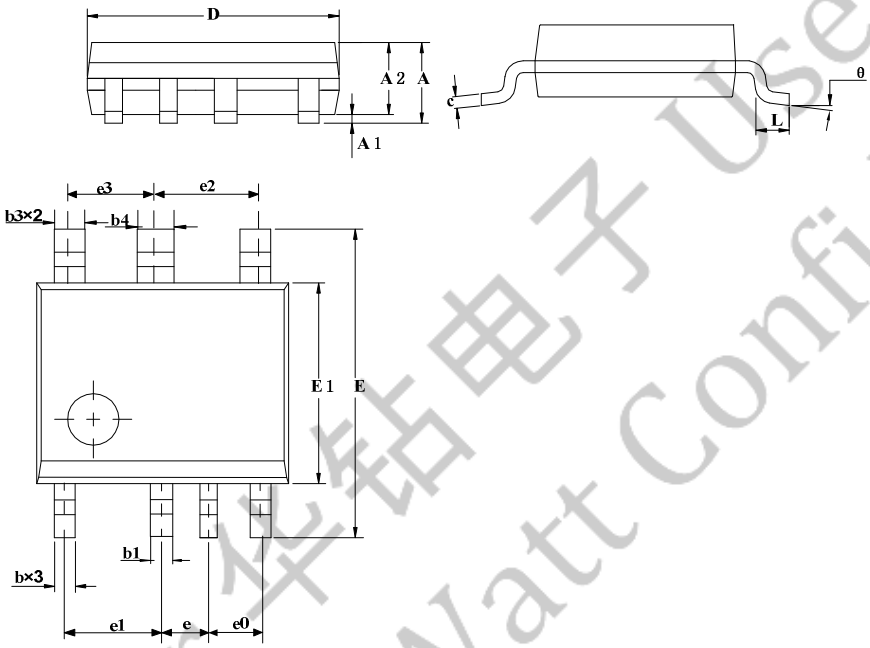

Symbol	MILLIMETER		
	MIN	NOM	MAX
A	1.25	—	1.45
A1	0.20REF		
A2	1.05	1.15	1.25
c	0.15	—	0.22
D	6.10	6.20	6.30
E	5.90	6.00	6.10
E1	3.80	3.90	4.00
e	1.23	1.33	1.43
e0	1.17	1.27	1.37
e1	2.41	2.51	2.61
e2	2.13	2.23	2.33
e3	2.63	2.73	2.83
b	0.30	0.40	0.50
b1	0.41	0.51	0.61
b3	0.45	0.55	0.65
b4	0.70	0.80	0.90
L	0.40	—	0.80
θ	0°	—	8°

For 华钻电子 Use Only
JoulWatt Confidential

JoulWatt® Proprietary Information. Patent Protected.
Unauthorized Photocopy and Duplication Prohibited.

IMPORTANT NOTICE

- **Joulwatt Technology Inc. reserves the right to make modifications, enhancements, improvements, corrections or other changes without further notice to this document and any product described herein.**
- **Any unauthorized redistribution or copy of this document for any purpose is strictly forbidden.**
- **Joulwatt Technology Inc. does not warrant or accept any liability whatsoever in respect of any products purchased through unauthorized sales channel.**

For 华钻电子 Use Only
JoulWatt Confidential

Copyright © 2020 JWB1997N/M/A/B Incorporated.

All rights are reserved by Joulwatt Technology Inc.