This Owner's Manual is provided and hosted by Appliance Factory Parts.

Appliance Factory Parts
Experts in BBQ, Humidifier, & Appliance Parts
1-800-955-7075

Jenn Air 750-0141 Owner's Manual

Shop genuine replacement parts for Jenn Air 750-0141

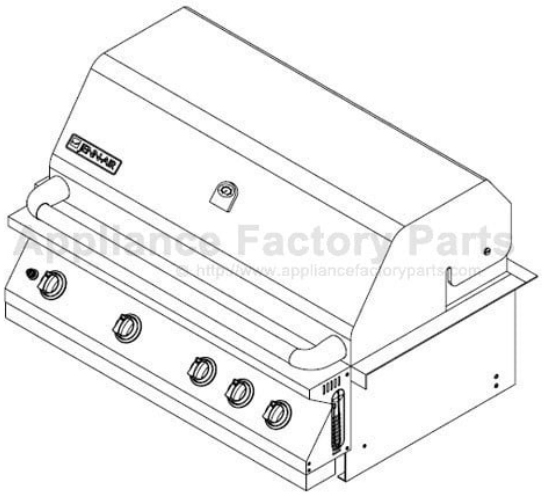

Find Your Jenn Air Grill Parts - Select From 107 Models

-------- Manual continues below --------

STAINLESS STEEL BUILT-IN GAS GRILL

MODEL #s: 750-0141 / 740-0141 LOWE'S ITEM #s: 168932 / 168931

Jenn-Air is a Trademark of the Maytag Corporation and is used under license to Lowe's Companies, Incorporated.

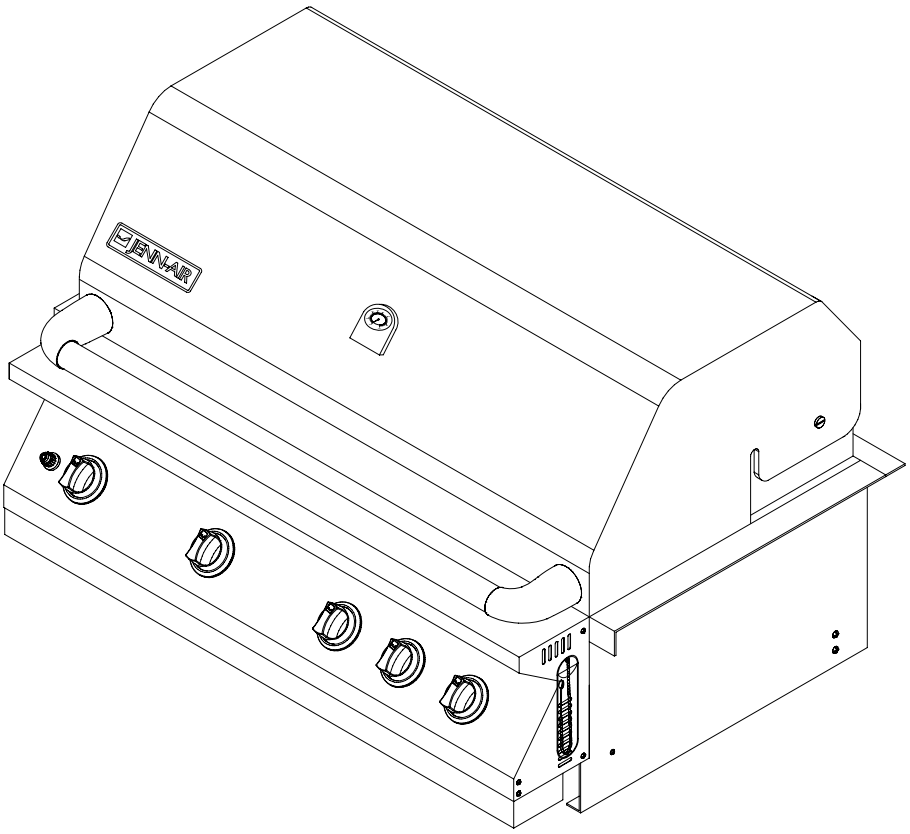

FOR OUTDOOR USE ONLY

A22Y07-3

PLEASE CONTACT 1-800-554-5799 FOR ASSISTANCE

DO NOT RETURN TO PLACE OF PURCHASE

SAFETY INSTRUCTIONS

RECOGNIZED SAFETY SYMBOLS, WORDS AND LABELS

WARNING

WARNING – Hazards or unsafe practices which COULD result in severe personal injury or death.

CAUTION

CAUTION – Hazards or unsafe practices which COULD result in minor personal injury.

WARNING
Do not try lighting this appliance without first reading the "LIGHTING INSTRUCTIONS" section of this manual.

WARNING
Spiders and insects can nest inside the burners of the grill and disrupt gas flow. This very dangerous condition could cause a fire behind the valve panel, thereby damaging the grill and making it unsafe for operation.
Inspect the grill at least twice a year.

WARNING
1. Do not store spare liquid propane cylinders under or near this appliance.
2. Never fill the cylinder beyond 80 percent capacity.
3. If the information above is not followed exactly, a fire resulting in death or serious injury could occur.

WARNING
Never attempt to use damaged or obstructed equipment. See your local liquid propane dealer for repair.

WARNING
Check all gas supply fittings for leaks before each use. Do not use the grill until all connections have been checked and do not leak. Do not smoke while leak testing. Never leak test with an open flame.

WARNING
1. Do not store or use gasoline or other flammable vapors and liquids in the vicinity of this or any other appliance.
2. An LP cylinder not connected for use shall not be stored in the vicinity of this or any other appliance.

WARNING
If you smell gas:
1. Shut off gas to the appliance.
2. Extinguish any open flame.
3. Open lid.
4. If odor continues, keep away from the appliance and immediately call your gas supplier or your fire department.

WARNING
The rotisserie motor is equipped with a plug and should be plugged directly into a properly grounded receptacle in accordance with local codes or, in the absence of local codes, with the National Electrical Code, ANSI/NFPA 70, or the Canadian Electrical Code, CSA C22.1. DO NOT cut or remove the grounding prong from this plug. Keep any electrical supply cord and the fuel supply hose away from any heated surface. Keep the rotisserie motor electric cord away from the heated surfaces of the grill. When not in use remove and store the motor in a dry location.

WARNING
You must use an OPD gas tank, which offers an Overfill Prevention Device.
This safety feature prevents the tank from being overfilled, which can cause malfunction of the LP gas tank, regulator and/or grill.

SAFETY INSTRUCTIONS

WARNING
Do not use the grill if the odor of gas is present. Contact customer service at 1-800-554-5799.

WARNING
When lighting, keep your face and hands as far away from the grill as possible.

WARNING
Do not install this unit into combustible enclosures. There should be a minimum clearance of 24 inches from all sides to combustible materials. Outdoor cooking appliance shall not be used under overhead combustible construction.

WARNING
Keep any electrical supply cord away from any heated surface.

CAUTION
Burner adjustments should only be performed after the burners have cooled.

CAUTION
When using a match to light the grill make sure to use the attached lighting rod.

CAUTION
When using the rotisserie burner, remove the warming rack. High heat from the burner may cause the warming rack to bend.

CAUTION
Before cleaning, make sure the gas supply and control knobs are in the “OFF” position and the burners have cooled.

WARNING
Failure to properly place the burner over the orifice could cause a fire to occur behind and beneath the valve panel, thereby damaging the grill and making it unsafe to operate.

WARNING
Do not leave the grill unattended while cooking.

WARNING
Always check for leaks after every LP tank change.

Model 750-0141 Natural Gas Grill

WARNING

1. The outdoor cooking gas appliance and its individual shutoff valve must be disconnected from the gas supply piping system during any pressure testing of that system at test pressure in excess of 1/2 psi (3.5 kpa).

2. The outdoor cooking gas appliance must be isolated from the gas supply piping system by closing its individual manual shutoff valve during any pressure testing of the gas supply piping system at test pressures equal to or less 1/2 psi (3.5 kpa).

Model 740-0141 LP Gas Grill

WARNING

1. Do not store spare LP gas cylinders under or near this appliance.
2. Never fill the cylinder beyond 80 percent capacity.
3. If the information above is not followed exactly, a fire resulting in death or serious injury could occur.

SAFETY INSTRUCTIONS

WARNING
Do not try lighting this appliance without first reading the “LIGHTING INSTRUCTIONS” section of this manual.

TESTED IN ACCORDANCE WITH ANSI Z21.58A CSA1.6A-2006 STANDARD FOR OUTDOOR COOKING GAS APPLIANCES. THIS GRILL IS FOR OUTDOOR USE ONLY.

Check your local building codes for the proper method of installation. In the absence of local codes, this unit should be installed in accordance with the National Fuel Gas Code ANSI Z223.1/NFPA 54, Storage and Handling of Liquefied Petroleum Gases, ANSI/NFPA B149.2 or CSA B149.1 Natural Gas and Propane Installation Code, and the National Electrical Code, ANSI/NFPA 70.

CALIFORNIA PROPOSITION 65-WARNING
The burning of gas fuel generates some byproducts, which are known by the State of California to cause cancer or reproductive harm. To minimize exposure to these substances, always operate this unit according to the care and use manual, ensuring you provide good ventilation when cooking with gas.

SAFETY PRACTICES TO AVOID PERSONAL INJURY
When properly cared for, your grill will provide safe, reliable service for many years. However, extreme care must be used as the grill produces intense heat that can increase accident potential. When using this appliance, basic safety practices must be followed, including the following:

Do not repair or replace any part of the grill unless specifically recommended in this manual. All other service should be referred to a qualified technician.

This grill is not intended to be installed in or on recreational vehicles or boats.

Children should not be left alone or unattended in an area where the grill is being used. Do not allow them to sit, stand or play in or around the grill at any time.

Do not store items of interest to children around or below the grill.

Do not permit clothing, pot holders or other flammable materials to come in contact with or too close to any grate, burner or hot surface until it has cooled. The fabric could ignite and cause personal injury.

For personal safety, wear proper apparel. Loose fitting garments or sleeves should never be worn while using this appliance. Some synthetic fabrics are highly flammable and should not be worn while cooking.

Only certain types of glass, heat-proof glass ceramic, earthenware, or other glazed utensils are suitable for grill use. Other types of materials may shatter with sudden temperature changes. Use only low or medium heat settings in accordance with the manufacturer’s guidelines.

Do not heat unopened food containers. A build-up of pressure may cause the containers to burst.

Use a covered hand when opening the grill lid.

Never lean over an open grill.

When lighting a burner, pay close attention to what you are doing. Make certain you are aware of which burner you are lighting, so your body and clothing remain clear of open flames.

SAFETY INSTRUCTIONS

When using the grill, do not touch the grill rack, burner grate or immediate surroundings as these areas become extremely hot and could cause burns. Use only dry potholders. Moist or damp potholders on hot surfaces may cause steam burns. Do not use a towel or bulky cloth in place of potholders. Do not allow potholders to touch hot portions of the grill rack.

Grease is flammable. Let hot grease cool before attempting to handle it. Do not allow grease deposits to collect in the grease tray at the bottom of the grill's firebox. Clean the grease tray often.

Do not use aluminum foil to line the grill racks or grill bottom. This can severely upset combustion air flow or trap excessive heat in the control area.

For proper lighting and performance of the burners, keep the burner ports clean. It is necessary to clean them periodically for optimum performance. The burners will only operate in one position and must be mounted correctly for safe operation.

Clean the grill with caution. To avoid steam burns, do not use a wet sponge or cloth to clean the grill while it is hot. Some cleaners produce noxious fumes or can ignite if applied to a hot surface.

INSECT WARNING
Spiders and insects can nest inside the burners of this and other grills, which could disrupt gas flow. This dangerous condition could cause a fire behind and beneath the valve panel, damaging the grill and making it unsafe to operate.

Inspect the grill at least twice a year.

Never use a dented or rusty propane cylinder.

Turn off grill controls and make certain the grill is cool before using any type of aerosol cleaner on or around the grill. The chemical that produces the spraying action could, in the presence of heat, ignite or cause metal parts to corrode.

Do not use the grill to cook excessively fatty meats or other products which promote flare-ups.

Do not operate the grill under unprotected combustible constructions. Use only in well ventilated areas. Do not use in buildings, garages, sheds, breezeways or other such enclosed areas.

This unit is intended for outdoor use only.

Keep the areas surrounding the grill free from combustible materials including, fluids, trash, and vapors such as gasoline or charcoal lighter fluid. Do not obstruct the flow of combustion and ventilation air.

Do not use briquettes of any kind in the grill.

The 750-0141 and 740-0141 grills are designed for optimum performance without the use of briquettes. Do not place briquettes on the flame tamers as this will block the vent to the grill burners. Adding briquettes can damage ignition components, thus voiding the warranty.

Keep the back of the cart free and clear from debris. Keep electrical supply cords and the rotisserie motor cord away from heated areas of the grill.

Never use the grill in extremely windy conditions. If located in a consistently windy area (oceanfront, mountaintop, etc.), a windbreak will be required. Always adhere to the clearance specifications.

PLACEMENT OF THE GRILL

WARNING
Do not install this unit into combustible enclosures. There should be a minimum clearance of at least 24 inches from all sides to combustible materials.

LOCATION
When determining a suitable location take into account concerns such as exposure to wind, proximity to traffic paths, and keeping gas supply lines as short as possible.

Place the grill in well-ventilated areas. Never locate the grill in a building, garage, breezeway, shed or other such enclosed areas. During heavy use, the grill will produce a lot of smoke.

GRILL SPECIFICATIONS [redacted]

Description	**750-0141 and 740-0141**
Cutout Width	33 in. (83.82 cm)
Cutout Depth	21 in. (53.34 cm)
Cutout Height	11 in .(27.94 cm)
Gas Requirements	Natural Gas: Standard residential 1/2 in. (1.3 cm) ID gas service line. Natural gas hose/regulator assembly included with quick-connect fitting for attachment to house natural gas line.
	Liquid Propane: Supplied with hose/regulator assembly for connection to standard 5 gal, 20 lb. liquid propane gas cylinder with Type 1, QCC-1 connection.
Grill Burners	4 Stainless Steel main burners. Infra-red rear rotisserie burner.
BTU Ratings	Main burners 48,000 BTU/Hr. Rear burners 10,000 BTU/Hr. Total 58,000 BTU/Hr.
Approximate Shipping Weight	150 lbs.

Island Construction

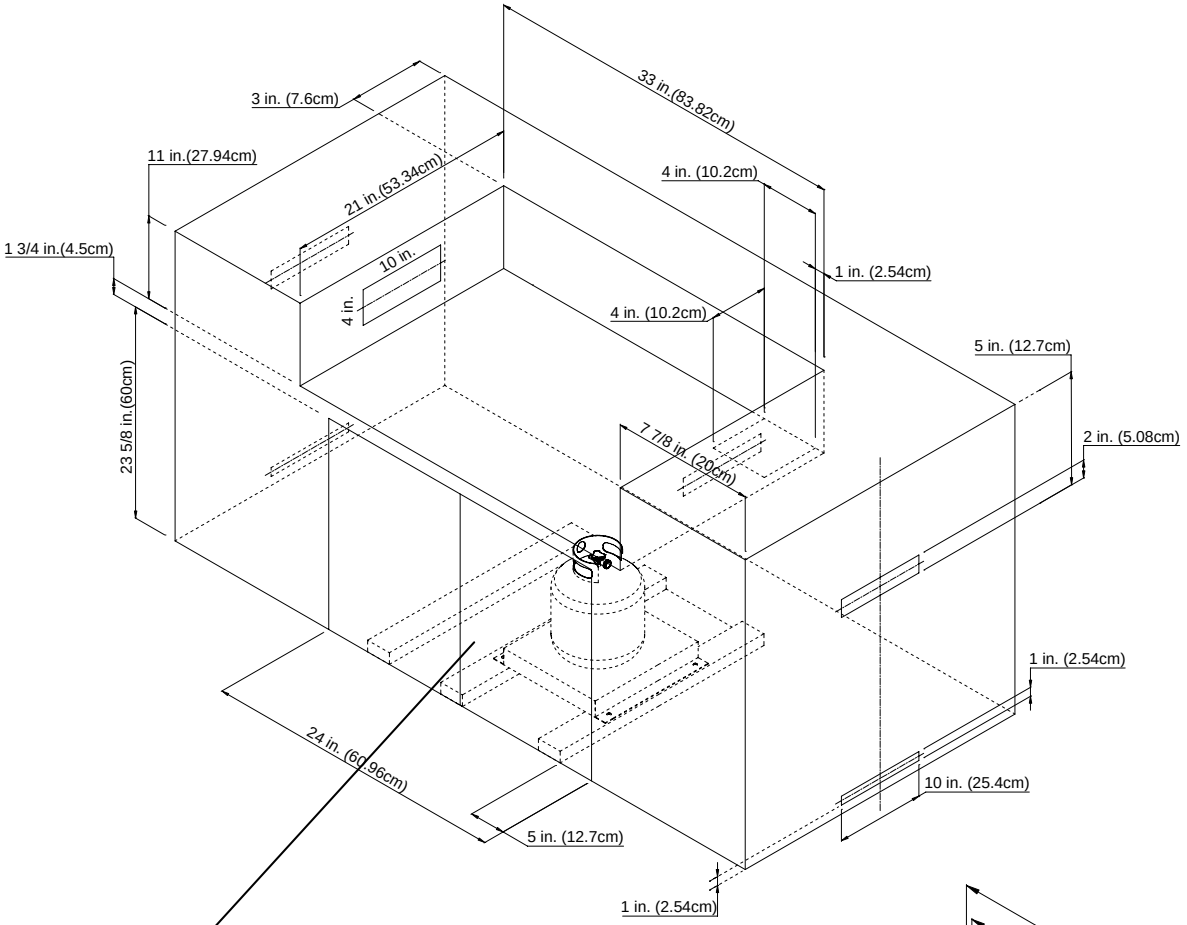

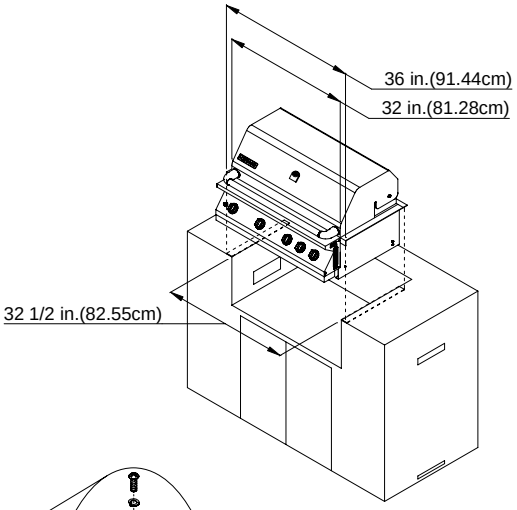

WARNING

Do not install this unit into combustible enclosures. There should be a minimum clearance of at least 24in.(60.96cm)from all sides to combustible materials.

Island cutout dimensions for Jenn-Air 4 burner LP and NG built-in grills:

Width 33 inches (83.82 cm)

Depth 21 inches (53.34cm)

Height 11 inches (27.94 cm)

Tank bolt dimension for Jenn-Air 4 burner LP

Tank bolt type: 1/2 inches-12UNC (1.27 cm)

Tank bolt length: 9/20 inches (11.5 cm)

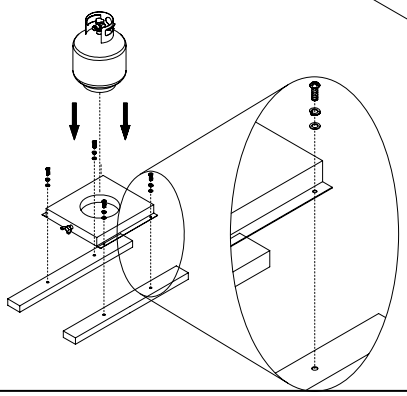

Non-Combustible material needs to be used for built-in enclosure. The proper selection of material could be brick, firewall or steel.

Never use wood or any combustible material for built-in enclosure.

Island Construction

740-0141

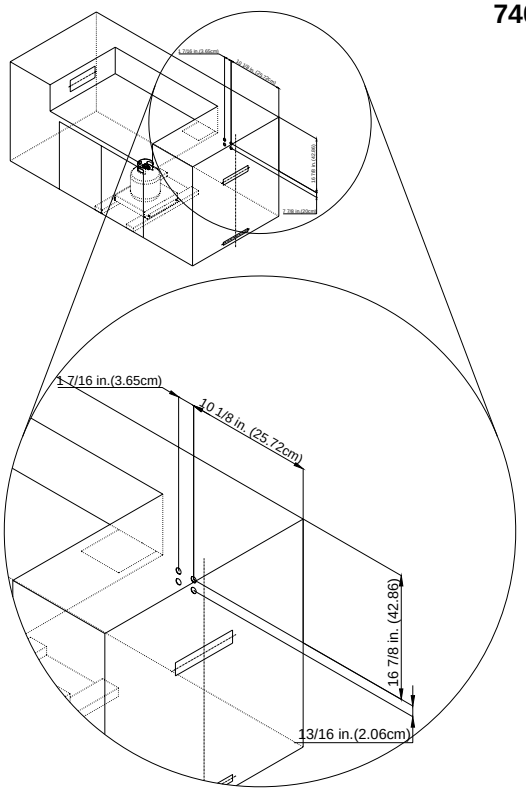

Measurements shown are for attaching the LP regulator to the island.

750-0141

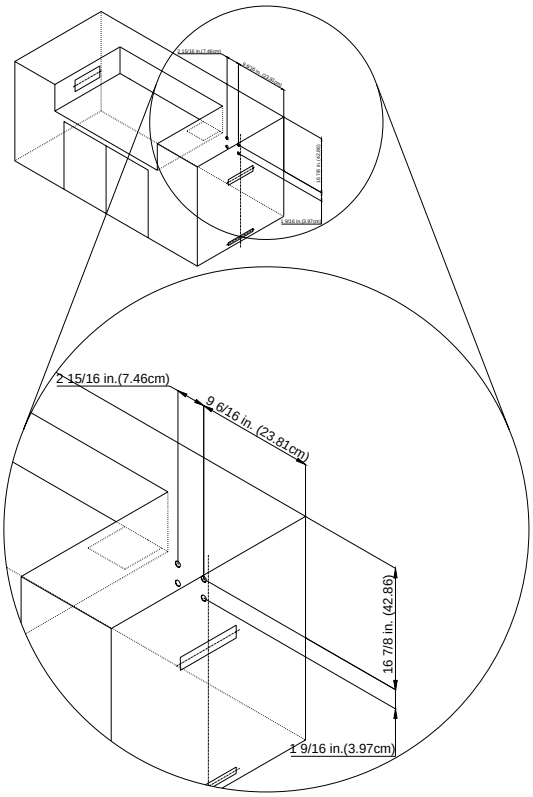

Measurements shown are for attaching the NG regulator to the island.

FRONT VIEW FOR BUILT-IN OPENING

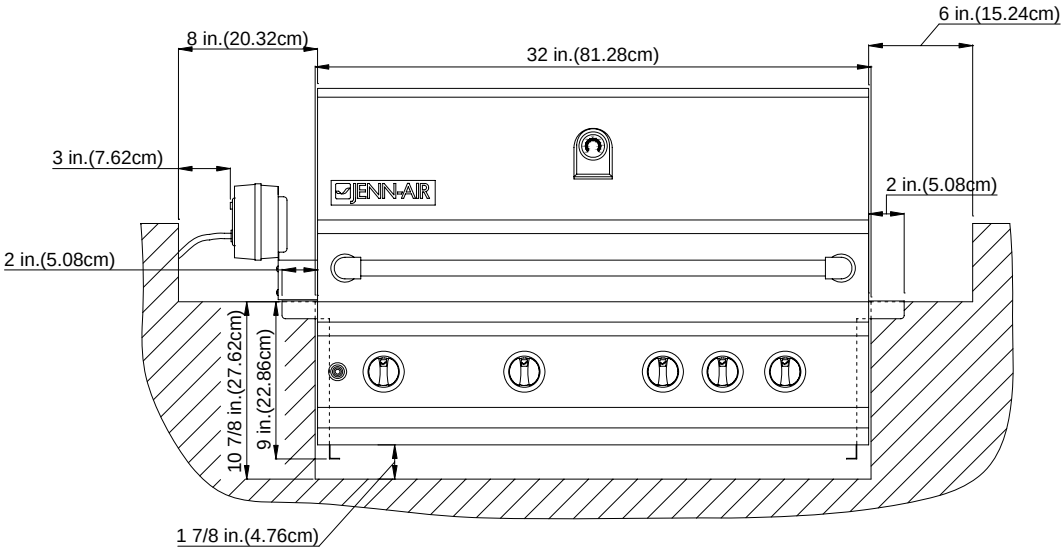

The following are minimum dimensions necessary to install the Jenn-Air built-in 4 burner grills.

Width of grill head: 32 in.
Depth for grill control panel: 10 7/8 in.
Combustion Gap below control panel: 1 7/8 in.

- A minimum of 6 in. clearance is needed from the right side of the grill firebox to non-combustible materials. The rotisserie motor is located on the left side of the grill firebox.

- A minimum of 8 in. clearance is required between the grill lid and any surrounding material to allow for proper functioning of the rotisserie motor.

SIDE VIEW FOR BUILT-IN OPENING

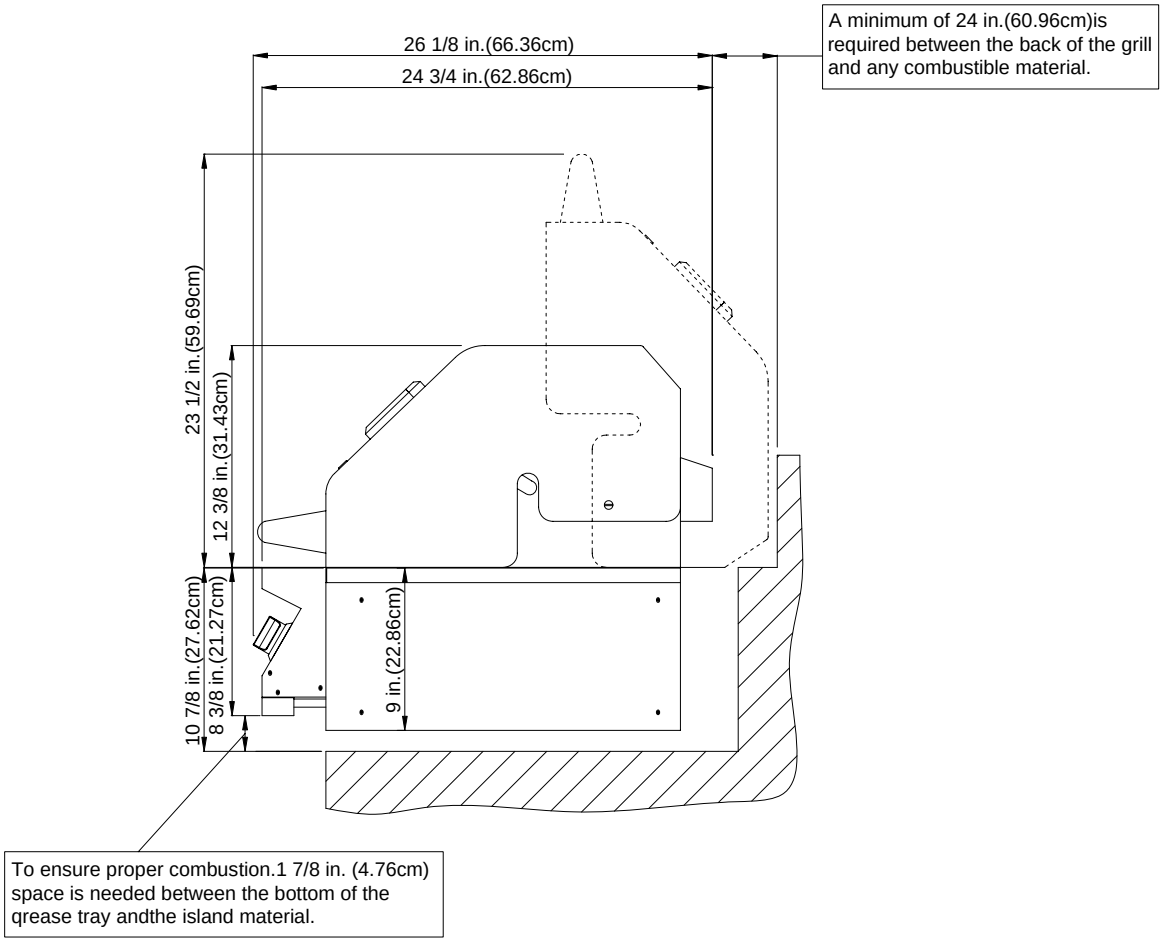

The following are minimum clearances necessary around the Jenn-Air built-in 4 burner grills.

Rear Clearance: 24 in. to combustible materials

Combustion gap below control panel: 1 3/4 in.

BATTERY INSTALLATION

1. Unscrew the ignition button housing by turning counterclockwise.
2. Insert the battery into the housing with the positive (+) terminal facing outward.
3. Replace the ignition button housing after the battery has been installed.

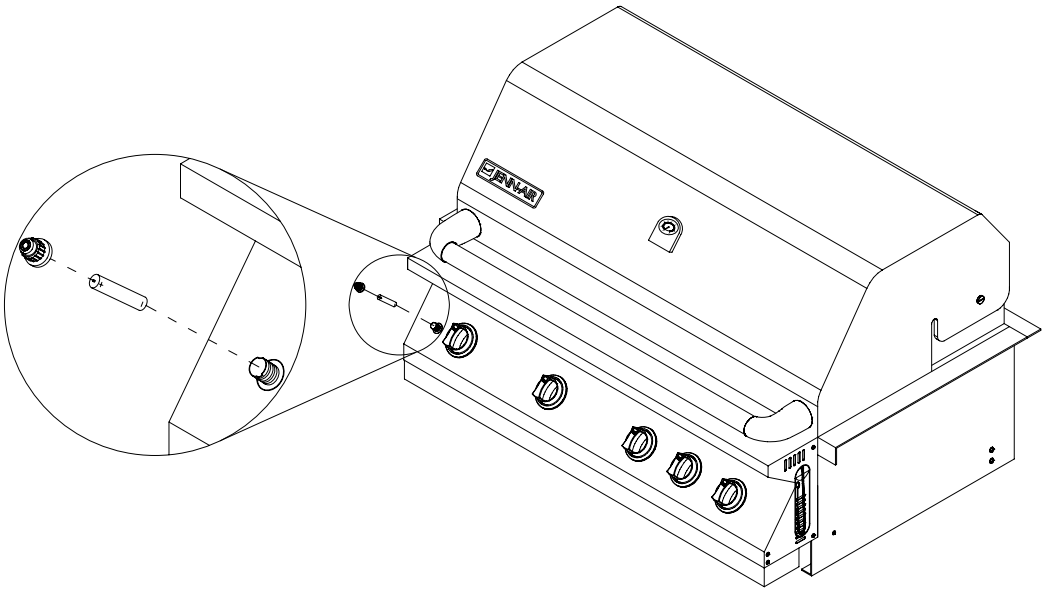

LP GAS HOOK-UP

Only the pressure regulator and hose assembly supplied with the grill should be used. Any replacement pressure regulator and hose assembly must be specified by the grill manufacturer.

This is a liquid propane configured grill. Do not attempt to use a natural gas supply.

Total gas consumption (per hour) of 740-0141 grill with all burners on “IGNITE / HI”:

Main burners	48,000 BTU/Hr.
Rotisserie burner	10,000 BTU/Hr
Total	58,000 BTU/Hr.

The installation of this appliance must conform with local codes or, in the absence of local codes, to the national fuel gas code, ANSI Z223.1. Installation in Canada must be in accordance with the Standard CAN/CSA-B149.2 (installation code for gas burning appliances and equipment) and local codes.

LP GAS CYLINDER REQUIREMENTS (20lb. Cylinder)

A dented or rusty LP gas cylinder may be hazardous and should be checked by your LP supplier. Never use a cylinder with a damaged valve. The LP gas cylinder must be constructed and marked in accordance with the specifications for LP gas cylinders of the U.S. Department of Transportation (DOT), or the National Standard of Canada, CAN/CSA-B339, Cylinders, Spheres and Tubes for Transportation of Dangerous Goods; and Commission.

The 20lb. cylinder must be provided with a shut off valve terminating in an LP gas supply cylinder valve outlet specified, as applicable, for connection type QCC1 is the standard for compressed gas cylinder valve outlet and inlet connection ANSI/CSA-V-1.

The cylinder supply system must be arranged for proper vapor withdrawal by making sure the tank is leveled. The cylinder must include a collar to protect the cylinder valve.

Manifold pressure: (operating): 10 in. water column (W.C.), (non-operating): 11.2 in. water column (W.C.).

The LP gas cylinder must be fitted with an Overfill Protection Device (OPD).

LP GAS HOOK-UP

Make sure the black plastic grommets on the LP cylinder valve are in place, and the hose does not come into contact with the grease tray or grill head.

LP GAS SUPPLY CYLINDER CONNECTION

Your grill is equipped with gas supply orifices for use only with liquid propane gas. It is also equipped with a high capacity hose/regulator assembly for connection to a standard 20lb. LP cylinder (18-1/4 in. high, 12-1/4 in. diameter).

1. The tank valve should be in the “OFF” position. If not, turn the knob clockwise until it stops.
2. Make sure the tank valve has the proper type 1 connection external male threads per ANSIZ21.81.
3. Make sure all burner valves are in the “OFF” position.
4. Inspect the valve connections, the port and regulator assembly. Look for damage or debris. Remove debris, and inspect hose for damage.
5. When connecting the regulator assembly to the tank valve, use your hand to tighten the nut clockwise until it stops. Use of a wrench may damage the quick coupling nut and result in a hazardous condition.
6. Open the tank valve fully by turning the valve counterclockwise.
7. Before lighting the grill, use a soap and water solution to check all the connections for leaks.
8. If a leak is found, turn the tank valve off and do not use the grill until a local LP gas dealer can make repairs.

WARNING

Do not attempt to use damaged or obstructed equipment. See your local LP gas dealer for repair.

LP GAS SUPPLY CYLINDER DISCONNECTION

1. Turn the burner valves off and make sure the grill is cool.
2. Turn the tank valve off by turning the control knob clockwise until it stops.
3. Detach the regulator assembly from the tank valve by turning the quick coupling nut counterclockwise.
4. Place the dust cap on the liquid propane cylinder valve outlet when the cylinder is not in use. Only install the type of dust cap that is provided with the cylinder valve. The use of other caps or plugs may result in propane leakage.

PROPANE TANK ASSEMBLY

Fig. 1

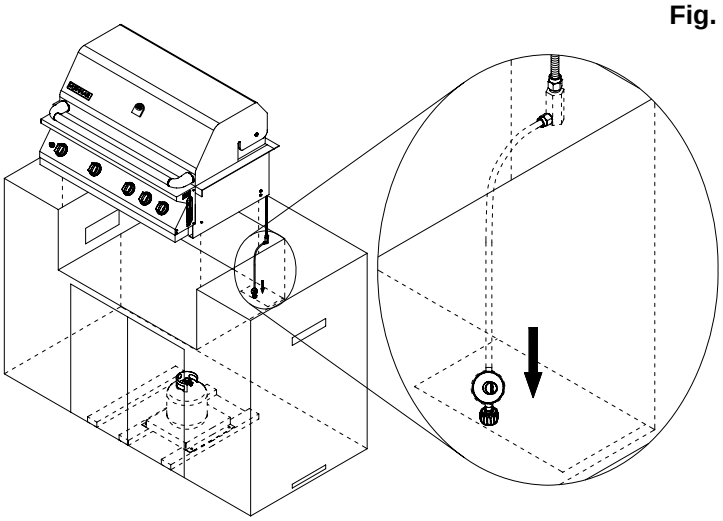

Make sure the LP regulator is located under the island hole as shown in Fig. 1.

Fig. 2

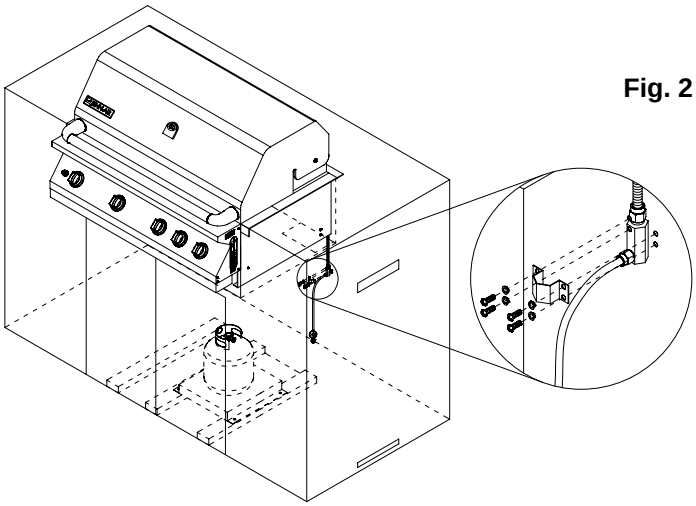

Use the 4 screws and clamp provided to attach the brass connector to the island as shown in Fig. 2. The brass connector is located between the flex tube and gas hose.

Fig. 3

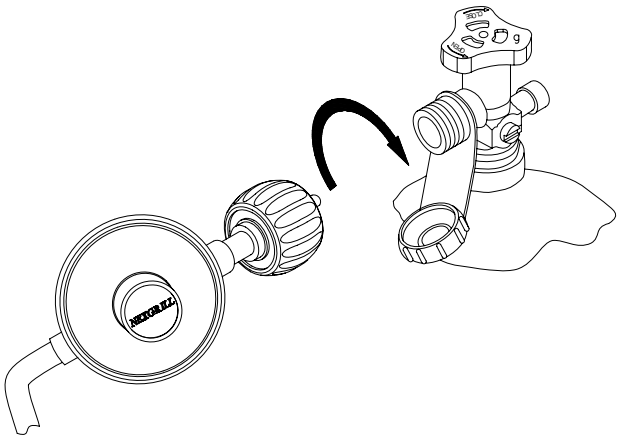

Connect the propane tank by turning the regulator handle clockwise as shown in Fig. 3. Turn off the LP supply at the cylinder when the grill is not in use.

INSTALLATION OF NATURAL GAS REGULATOR [redacted]

1. The Natural Gas regulator has been factory installed. Attach the PVC gas hose to the regulator (see drawing below).
2. Adjust the brass elbow so that it is pointing down.
3. Connect the other end of the PVC gas hose to the house gas line using the quick-connect fitting.
4. Do not use the grill until all connections have been checked and do not leak.

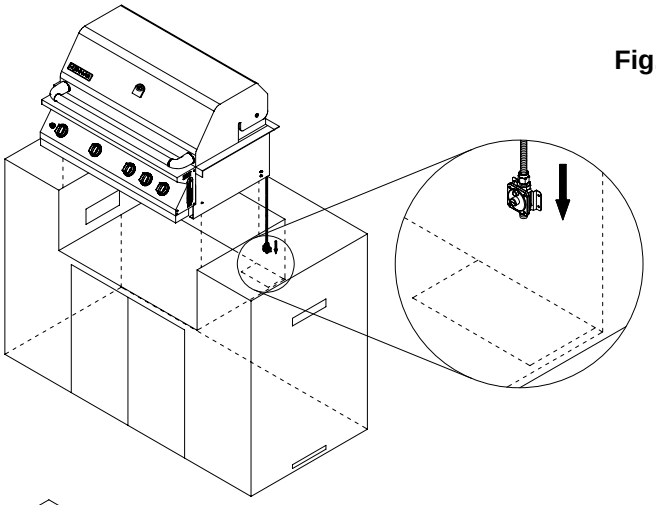

Fig. 1

Make sure the NG regulator is located under island hole as shown in Fig. 1.

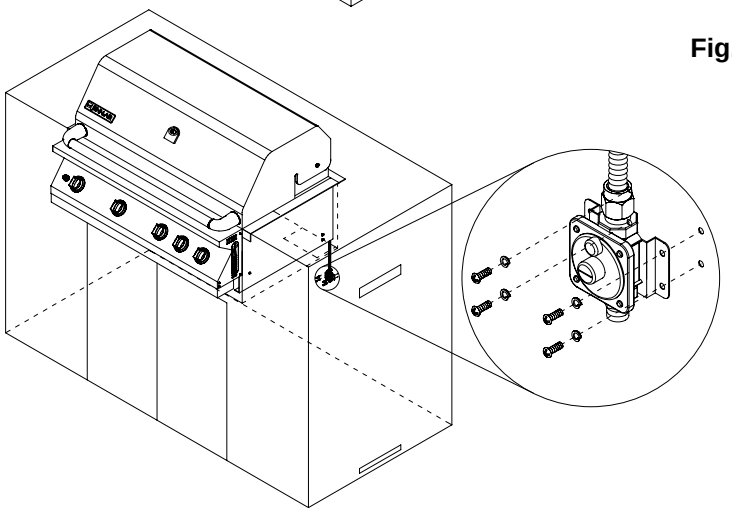

Fig. 2

Use the 4 screws and bracket provided to attach the NG regulator to the island as shown in Fig. 2.

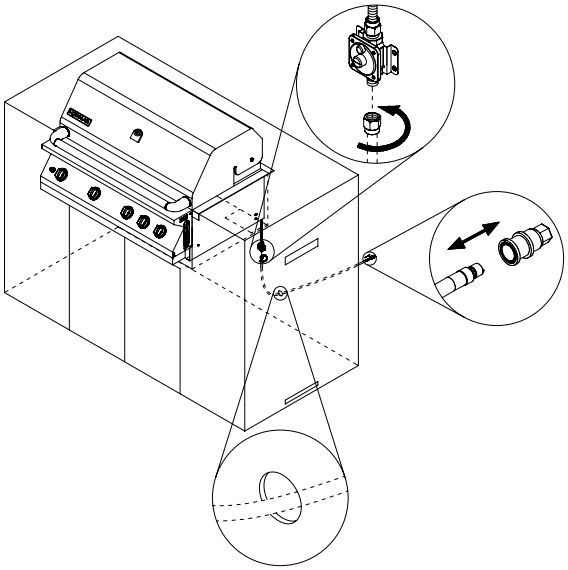

Fig. 3

Insert the 12ft. gas hose through the back of the island and connect to the NG regulator.

NATURAL GAS HOOK-UP

Only the pressure regulator and hose assembly supplied with the grill should be used. Any replacement pressure regulator and hose assembly must be specified by the grill manufacturer.

The installation of this appliance must conform with the local codes or, in the absence of local codes, to the national fuel gas code, ANSI Z223.1.

Total gas consumption (per hour) of the 750-0141 grill with all burners on the “IGNITE / HI” setting:

Main burners	48,000 BTU/Hr
Rear burner	10,000 BTU/Hr
Total	58,000 BTU/Hr

LEAK TESTING

GENERAL
Although all gas connections on the grill are leak tested at the factory prior to shipment, a complete gas tightness check must be performed at the installation site. Periodically check the whole system for leaks following the procedures listed below.

If the smell of gas is detected at anytime you should immediately check the entire system for leaks.

BEFORE TESTING
Make sure all packing materials have been removed from the grill, including the burner tie-down straps.

WARNING
Do not use the grill until all connections have been checked and do not leak.

Do not smoke while leak testing.

Never leak test with an open flame.

Make a soap solution of one part liquid detergent and one part water. You will need a spray bottle, brush, or rag to apply the solution to the fittings.

TO TEST
1. Make sure the control valves are in the “OFF” position, and turn the gas supply “ON”.

2. Apply the soap solution to all pipe fittings, from the natural gas regulator and supply valve or from the LP cylinder up to and including the pipe that connects to the burners. Soap bubbles will appear where a leak is present.

3. If a leak is present, immediately turn off the gas supply and tighten the leaky fittings.

4. Turn the gas back “ON” and recheck.

5. Should the gas continue to leak from any of the fittings, turn off the gas supply and contact customer service at 1-800-554-5799.

6. If it is evident there is excessive abrasion or wear, or the hose is cut, it must be replaced prior to the outdoor cooking gas appliance being put into operation.

Only those parts recommended by the manufacturer should be used on the grill. Substitutions will void the warranty.

GAS FLOW CHECK
Each grill burner is tested and adjusted at the factory prior to shipment. However, variations in the local gas supply may make it necessary to adjust the burners.

Flames should be blue and stable with no yellow tips, excessive noise or lifting.

If any of these conditions exist, first check to see if the burner is blocked by dirt, debris, spider webs, etc. If the burners are clear of foreign objects or debris, please contact customer service at 1-800-554-5799 for further assistance.

It is handy to keep a spray bottle of soapy water near the shut-off valve of the gas supply line. Spray all the fittings. Bubbles indicate leaks.

Disconnected LP cylinders must have threaded valve plugs tightly installed, and must not be stored in a building, garage or any other enclosed area.

The gas must be turned off at the supply cylinder when the unit is not in use.

Cylinders must be stored outdoors in a well-ventilated area out of reach of children.

WARNING
Always check for leaks after every LP tank change.

INSTALLER FINAL CHECK

- ☐ Specified clearance maintained 24 inches from combustible materials/construction.
- ☐ All internal packaging has been removed.
- ☐ All the burners are factory installed.
- ☐ The hose and regulator are properly connected.
- ☐ The unit has been tested and is free of leaks.
- ☐ The gas supply shut off valve has been located.
- ☐ Keep the instruction manual with the grill for future reference.

Model 750-0141

WARNING

1. The outdoor cooking gas appliance and its individual shutoff valve must be disconnected from the gas supply piping system during any pressure testing of that system at test pressure in excess of 1/2 psi (3.5 kpa).

2. The outdoor cooking gas appliance must be isolated from the gas supply piping system by closing its individual manual shutoff valve during any pressure testing of the gas supply piping system at test pressures equal to or less 1/2 psi (3.5 kpa).

Model 740-0141

WARNING

1. Do not store spare LP gas cylinders under or near this appliance.
2. Never fill the cylinder beyond 80 percent capacity.
3. If the information above is not followed exactly, a fire causing death or serious injury may occur.

OPERATING INSTRUCTIONS

GENERAL USE OF THE GRILL AND ROTISSERIE
Each main burner is rated at 12,000 BTU/Hr. The main grill burners encompass the entire cooking area and are side ported to minimize blockage from falling grease and debris. Above the burners are stainless steel flame tamers. The igniter knobs are located on the lower center portion of the valve panel. Each rotary igniter is labeled on the control panel.

USING THE GRILL
Grilling requires high heat for searing and proper browning. When grilling, take into consideration the meat involved and desired preparation. Large pieces of meat or poultry may need to be cooled at a lower setting after the initial browning. This method cooks the food thoroughly without burning the outside.

Food cooked for a long time or basted with a sugar-based marinade may need a lower heat setting near the end of its cooking time.

To begin:

1. Make sure the grill has been leak tested and is properly placed.
2. Remove remaining packing materials.
3. Open the lid.
4. Light the grill burners using the instructions on page 20.
5. Turn the control knob(s) to “IGNITE / HI” setting and preheat the grill for 15 minutes. The grill lid should be closed during the pre-heat period.
6. Place the food on the grill and cook to the desired preparation. If necessary, adjust the heat setting. The control knob may be positioned at any setting between “IGNITE / HI” and “LO”.

CAUTION
Do not leave the grill unattended while cooking.

The grill is designed to grill efficiently without the use of lava rocks or briquettes of any kind. Heat is radiated by the stainless steel flame tamers positioned above each burner.

Light the rear burner as described in the lighting instructions on page 20. Once lit, the rotisserie burner will reach cooking temperature in about 1 minute.

The rotisserie motor is capable of turning up to a 12lb. cut of meat or poultry. The motor slides onto the stainless steel motor mount.

The rotisserie motor must be electrically grounded in accordance with local codes or, in the absence of local codes, with the National Electrical Code, ANSI/NFPA 70.

WARNING
The rotisserie motor is equipped with a plug and should be plugged directly into a properly grounded receptacle.

Do not cut or remove the grounding prong from this plug.

Keep the rotisserie motor cord away from the heated surfaces of the grill. When not in use remove and store the motor in a dry location.

THE ROTISSERIE SKEWER
The skewer for the rotisserie should be assembled into the motor assembly by placing the pointed end into the motor, and then sliding the grooved bushing into the slot at the opposite side of the grill.

The thumbscrew for the grooved bushing should be inside the grill body.

LOADING THE ROTISSERIE SKEWER

1. Screw the bushing into the skewer rod at the opposite end from the point.

2. Slide and tighten the counter balance apparatus onto the skewer rod approximately 2-4 in. from the bushing.

3. Slide the first meat fork onto the skewer rod prongs toward the food.

4. Center the product to be cooked on the skewer, and then push the meat forks firmly together.

5. Tighten the wing nuts.

6. It may also be necessary to wrap the food with butcher's string (never use nylon or plastic string) to secure any loose portions.

7. Once the food is secure, insert the skewer into the motor.

It is normal for the skewer to flex when larger cuts of meat are being cooked. It may also be necessary to remove the cooking grids for larger cuts of meat.

If the meat scrapes on the cooking grids during any part of the rotation, the cooking grids must be removed.

Adjust the counter balance weight to balance the heavier side of the meat and avoid lopsided rotation of the rotisserie motor.

NOTE

After its first use, the stainless steel adjacent to the rotisserie burner will most likely turn dark blue. This is a normal property of the non-rusting, type stainless steel used on the grill.

CAUTION

Remove the warming rack when using the rotisserie burner. High heat from the burner may cause the warming rack to bend.

LIGHTING INSTRUCTIONS

BEFORE LIGHTING…
Inspect the gas supply piping prior to turning the gas “ON”. If there is evidence of cuts, wear, or abrasion, it must be replaced prior to use.

WARNING
Do not use the grill if gas odor is present. Contact customer service at 1-800-554-5799.

Leak check the piping and regulator connections with a soap and water solution before operating the grill (see instructions on page 15).

Only the pressure regulator supplied with the unit should be used. Never substitute regulators. If a replacement is necessary, contact customer service for proper replacement 1-800-554-5799.

TO LIGHT THE GRILL BURNER

1. Make sure all knobs are in the “OFF” position, and turn “ON” the gas supply.

2. The igniter is built into the valve. To ignite each burner simply press and turn the control knobs to the “IGNITE / HI” setting, you will hear the valve click as it sends a spark to the pilot flame.

3. If the burner does not light, wait 5 minutes for any excess gas to dissipate and then try again.

4. If the burners still do not light, follow the match lighting instructions on page 21.

WARNING
When lighting, keep your face and hands as far away from the grill as possible.

FLAME CHARACTERISTICS
Check for proper burner flame characteristics. Each burner is adjusted prior to shipment. However, variations in the local gas supply may make minor adjustments necessary.

Burner flames should be blue and stable with no yellow tips, excessive noise or lifting.

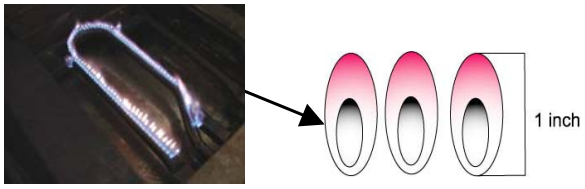

Yellow flames indicate insufficient air. Noisy flames or flames that lift away from the burner indicate too much air (See the “GAS FLOW CHECK” section on page 15).

TO LIGHT THE ROTISSERIE BURNER

1. Open the lid and press the knob for about 5 seconds without turning it. This will allow time for the gas to flow into the rear burner.

2. Press the knob for 5 seconds, and then turn the knob to the “IGNITE / ON” setting.

3. Press the igniter button to light the rotisserie burner.

4. Once it is lit, release electronic ignition button, and still hold in the Rear Burner knob for another 15 seconds to be sure the burner stays lit.

5. If the burner does not light, turn the control knob to the “OFF” position.

6. If the igniter does not function, follow the instructions on page 21 for match lighting.

Keep a spray bottle of soapy water near the gas supply valve, and check the connections before each use.

LIGHTING ILLUSTRATIONS

MAIN BURNER LIGHTING



1. Open the top cover or lid.



2. Push and turn one of the main burner knobs to the “IGNITE/HI” setting.



3. Once the burner ignites, adjust the temperature level as desired.

ROTISSERIE BURNING LIGHTING



4. Push and turn the Rear Burner knob to the “IGNITE/ON” setting and hold in for 5 seconds while holding, push electronic ignition button, until burner is lit. Once lit, release electronic ignition button, and still hold in the Rear Burner knob for another 15 seconds (if the burner does not ignite follow match lighting instruction on page 21).

MATCH LIGHTING THE GRILL

If the burner will not light after several attempts using the control knobs, the burner may be lit with a match.

1. If you have already attempted to light the burner with the igniter, allow 5 minutes for any accumulated gas to dissipate.

2. Insert a match into the lighting rod. Ignite the match and insert through the cooking grids to the burner.

3. Press and turn the control knob to the “IGNITE/HI” setting. Continue to press the knob until the burner ignites. The burner should light immediately.

4. If the burner does not ignite within 4 seconds, turn the control knob to the “OFF” position. Wait 5 minutes for the gas to dissipate and try again.

WARNING
When lighting, keep your face and body as far away from the grill as possible.

CAUTION
When using a match to light the grill make sure to use the attached lighting rod.

Lighting Rod

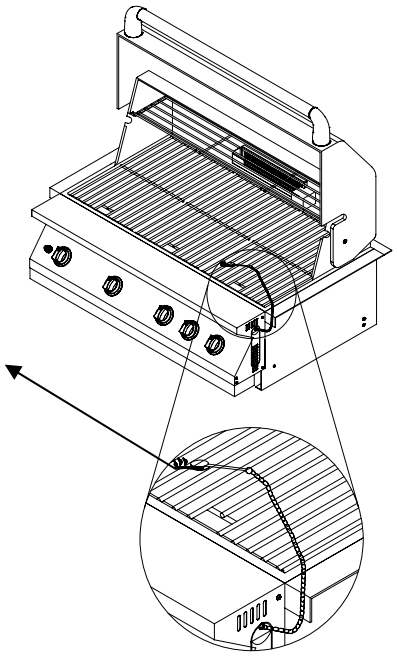

CARE & MAINTENANCE

STAINLESS STEEL
Grease specks can gather and bake onto the surfaces of the stainless steel, giving the appearance of rust. For removal, use an abrasive pad with a stainless steel cleaner.

GRILL RACK
The best time to clean the grill is immediately after cooking is completed, and the flames have been turned off.

Wear a barbeque mitt to protect your hand from heat and steam.

Scrub the hot grill by dipping a bristle barbecue brush in tap water. Cleaning will be more difficult if the grill is allowed to cool.

CAUTION
Before cleaning, make sure the gas supply and control knobs are in the "OFF" position and the burners have cooled.

GRILL BURNER CLEANING
1. Turn off the gas supply, and make sure the control knobs are in the "OFF" position.

2. Make certain the grill is cool, and clean the exterior of the burner with a wire brush. Use a metal scraper for stubborn stains.

3. Clear clogged ports with a straightened paper clip. Never use a wooden toothpick. It may break off and clog the port.

4. Check and clean burners/venturi tubes for insects and insect nest. A clogged tube can lead to a fire beneath the grill.

5. If insects or other obstructions are blocking the flow of gas to the burner, call customer service at 1-800-554-5799.

GRILL BURNERS
Extreme care should be taken when moving a burner. It must be correctly centered on the orifice before any attempt is made to relight the grill. Frequency of cleaning will depend on how often you use the grill.

WARNING
Failure to properly place the burner over the orifice could cause a fire to occur behind and beneath the valve panel, thereby damaging the grill and making it unsafe to operate.

GRILL BURNER REMOVAL/INSTALLATION
The grill burners are factory installed.

To remove the main burners for cleaning:
1. Locate the nut at the rear of the burner on the bottom side.
2. Remove the nut and lift the burner out of the fire box.

To reinstall the main burners:
3. Insert the burner over the valve assembly (model 750-0141/740-0141 Item # 16 on pages 24 and 26).
4. Insert the back of the burner into the hole at the rear of the fire box and reinstall the nut.
5. Make sure orifice spud is inside the burner's venturi as shown below.

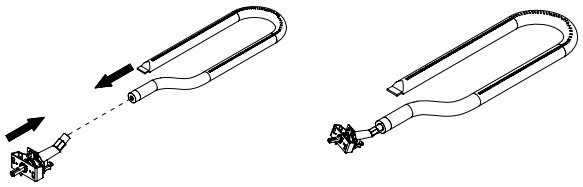

GREASE TRAY CLEANING
The grease tray should be emptied, wiped down and washed after each use with a mild detergent and warm water solution.

A small amount of sand or cat litter may be placed in the bottom of the grease tray to absorb the grease. Check the grease tray frequently. Do not allow excess grease to accumulate and flow out of the grease tray.

CHECK YOUR GRILL FOR THE FOLLOWING ITEMS TWICE A YEAR
1. Keep area around the grill free and clear of combustible materials.
2. Do not obstruct the flow of combustible and ventilation air.
3. Visually check the burner flames (see Flame Characteristics on page 19).
4. Clean the grill as described above
5. Check the grill for spiders and insects (see page 23).

TROUBLE SHOOTING

INSECT WARNING
Spiders and insects can nest in the burners of this and other grills, which could disrupt gas flow. This dangerous condition could cause a fire behind and beneath the valve panel, damaging the grill and making it unsafe to operate.

Inspect the grill at least twice a year.

WHEN TO LOOK FOR SPIDERS
You should inspect the burners twice a year or immediately after any of the following conditions occur:

1. The smell of gas in conjunction with the burner flames appearing yellow.
2. The grill does not reach temperature.
3. The grill heats unevenly.
4. The burners make popping noises.

BEFORE CALLING FOR SERVICE
If the grill does not function properly, use the checklist below before contacting your dealer for service. You may save yourself the cost of a service call.

PROBLEMS	WHAT TO DO
Grill will not light when the control knob is rotated.	• Check to see if house NG valve is open. • Check to see if LP tank is empty. • Clean wire(s) and/or electrode with rubbing alcohol and a clean swab. • Make sure the wire is connected to the electrode assembly. • Check to see if other burners operate. If so, check the gas orifice on the malfunctioning burner for an obstruction. • Replace the battery.
Burner flame is yellow or orange and the gas odor is present.	• Contact customer service at 1-800-554-5799.
Low heat with the knob on “HI”.	• Check to see if the fuel hose is bent or kinked. • Make sure the grill area is clear of dust. • Check your gas supply and gas pressure. • If it is only one burner that appears low, make sure the orifice or burner is clean.

EXPLODED VIEW MODEL 750-0141 [redacted]

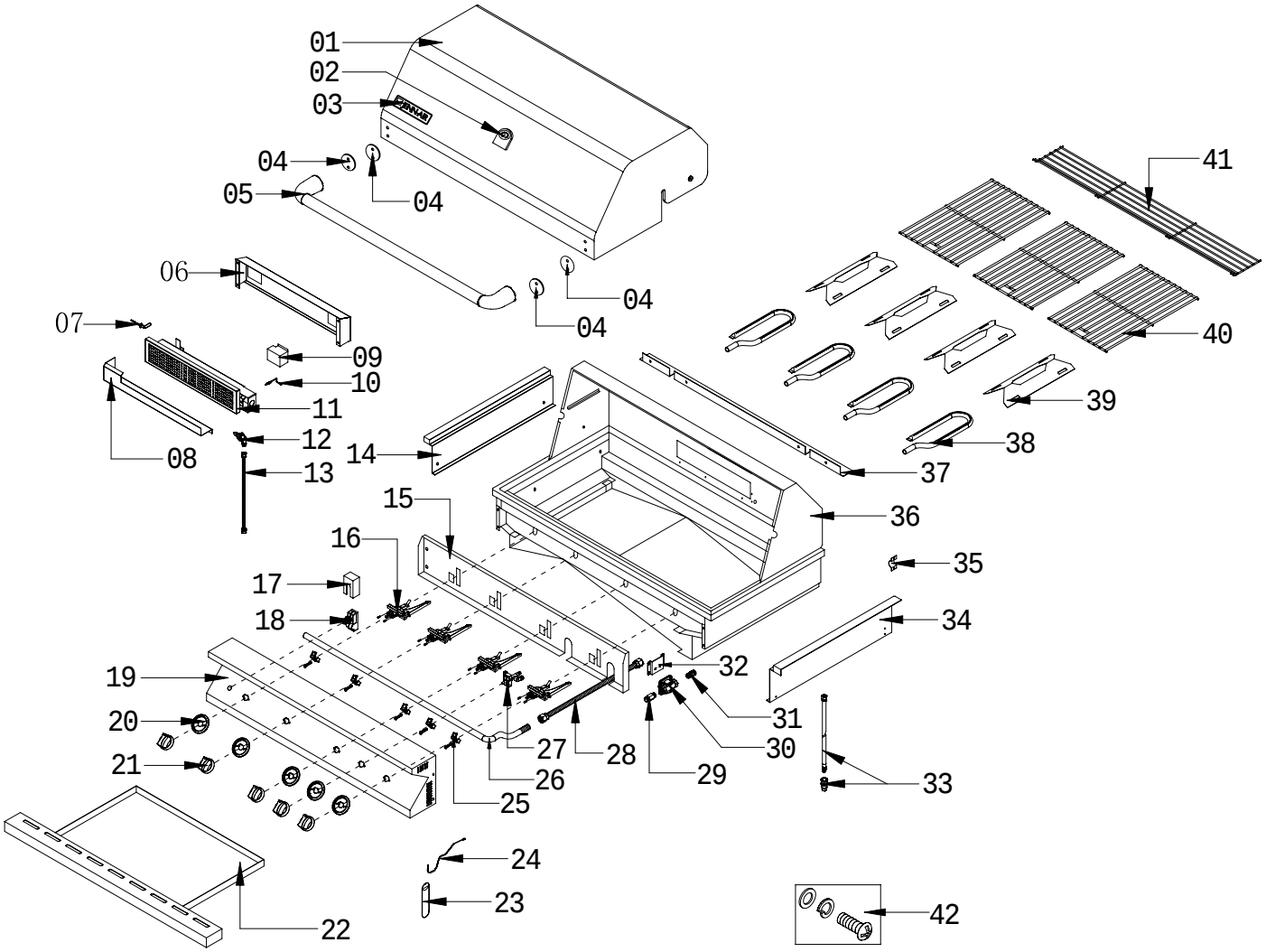

PARTS LIST

MODEL 750-0141

REF#	DESCRIPTION	QTY	REF#	DESCRIPTION	QTY
1	Main Lid	1	22	Grease Tray	1
2	Temperature Gauge	1	23	Lighting Rod Cover	1
3	Logo	1	24	Lighting Rod	1
4	Main Lid Handle Heat Insulating Spacer	4	25	Gas Valve Clamp	5
5	Main Lid Handle	1	26	Main Manifold	1
6	Rear Baffle	1	27	Rotisserie Gas Valve	1
7	Rotisserie Burner lgniter wire	1	28	Main Burner Flex Gas	1
8	Rotisserie Burner Gas Collector	1	29	NG Brass Connector A	1
9	Thermocouple Bracket	1	30	Regulator, NG	1
10	Thermocouple	1	31	NG Brass Connector B	1
11	Rotisserie Burner	1	32	NG Regulator Clamp	1
12	Rotisserie Orifice W/ Brass Elbow	1	33	NG Hose W/Quick Connector	1
13	Rotisserie Burner Flex Gas	1	34	Flange, Right	1
14	Flange, Left	1	35	Main Burner Flex Gas Clamp	1
15	Front Baffle	1	36	Main Burner Bowl Assembly	1
16	Main Gas Valve (Cast Brass)	4	37	Trim Piece Rear	1
17	Electronic Igniter Module cover	1	38	Main Burner	4
18	Electronic Igniter Module	1	39	Flame Tamer	4
19	Main Control Panel	1	40	Cooking Grid With Hole	3
20	Bezel	5	41	Warming Rack	1
21	Control Knob	5	42	Hardware	1

EXPLODED VIEW MODEL 740-0141 [redacted]

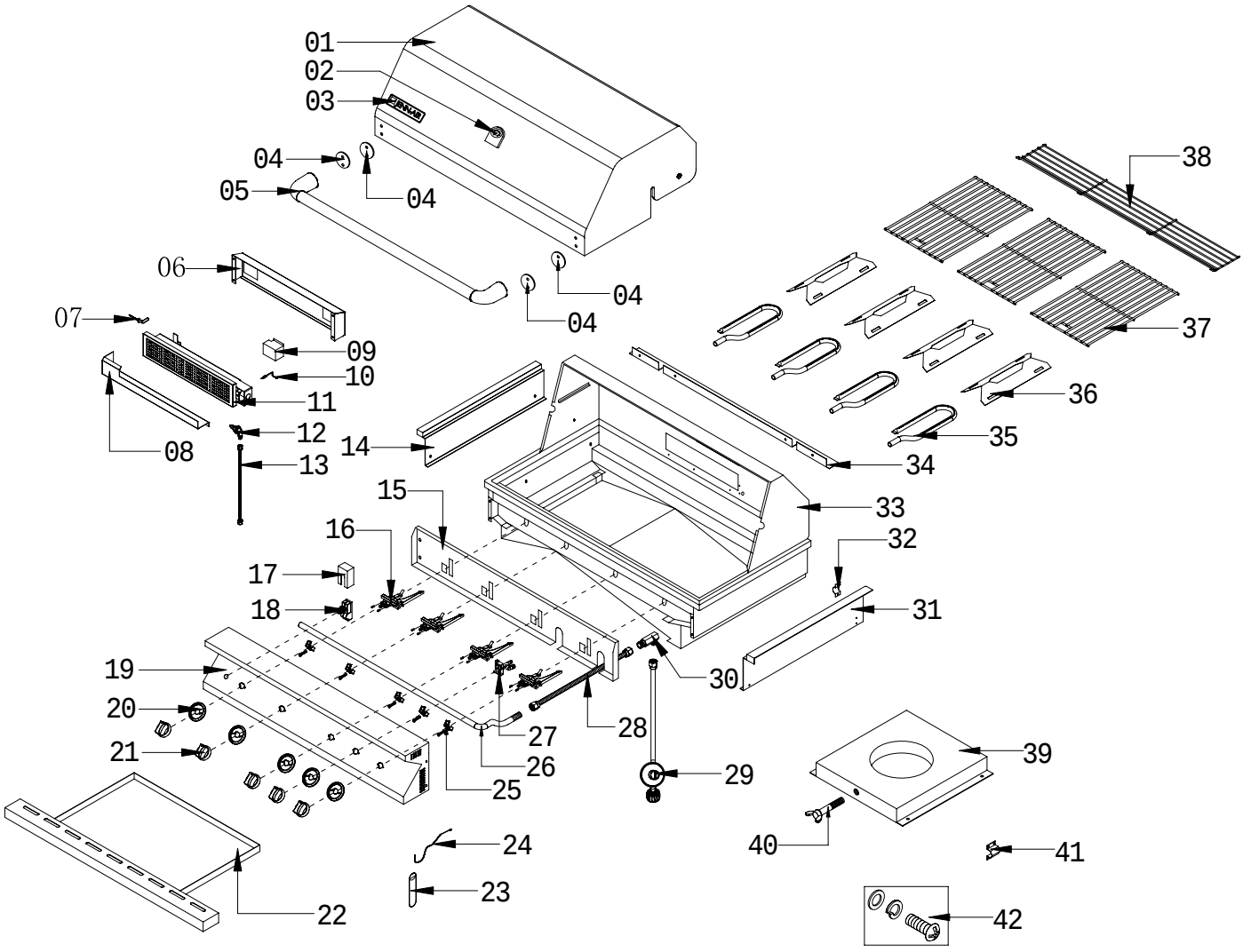

PARTS LIST

MODEL 740-0141

REF#	DESCRIPTION	Q'TY	REF#	DESCRIPTION	QTY
1	Main Lid	1	22	Grease Tray	1
2	Temperature Gauge	1	23	Lighting Rod Cover	1
3	Logo	1	24	Lighting Rod	1
4	Main Lid Handle Heat Insulating Spacer	4	25	Gas Valve Clamp	5
5	Main Lid Handle	1	26	Main Manifold	1
6	Rear Baffle	1	27	Rotisserie Gas Valve	1
7	Rotisserie Burner lgniter Wire	1	28	Main Burner Flex Gas	1
8	Rotisserie Burner Gas Collector	1	29	Regulator, LP	1
9	Thermocouple bracket	1	30	90 Degree Brass Adaptor	1
10	Thermocouple	1	31	Flange, Right	1
11	Rotisserie Burner	1	32	Main Burner Flex Gas Clamp	1
12	Rotisserie Orifice W/ Brass Elbow	1	33	Main Burner Bowl Assembly	1
13	Rotisserie Burner Flex Gas	1	34	Trim Piece Rear	1
14	Flange, Left	1	35	Main Burner	1
15	Front Baffle	1	36	Flame Tamer	4
16	Main Gas Valve (Cast Brass)	4	37	Cooking Grid With Hole	3
17	Electronic Igniter Module cover	1	38	Warming Rack	1
18	Electronic Igniter Module	1	39	Tank Tray	1
19	Main Control Panel	1	40	Tank Bolt	1
20	Bezel	5	41	LP Regulator Clamp	1
21	Control Knob	5	42	Hardware	1

GRILLING HINTS

The preparation of meat, whether rare, medium, or well done, is affected to a large degree by the thickness of the cut.

The cooking time is affected by meat type, size, shape of the cut, the temperature of the meat when cooking begins, and the degree of preparation desired.

It is recommended that meat be defrosted overnight in a refrigerator as opposed to a microwave. This generally yields a juicier cut of meat.

Turn the meat with a spatula instead of tongs. The spatula will keep the meat whole and trap in the juices.

To get the juiciest meat, add seasoning or salt after the cooking is finished and turn the meat only once (juices are lost when the meat is turned several times). Turn the meat just after the juices begin to bubble to the surface.

Trim excess fat from the meat before cooking.

To prevent steaks or chops from curling during cooking, slit the fat around the edges at 2-inch intervals.

WARNING
Do not leave the grill unattended while cooking.

GRILL COOKING CHART

FOOD	WEIGHT OR THICKNESS	FLAME SIZE	APPROXIMATE TIME	SPECIAL INSTRUCTIONS AND TIPS
VEGETABLES				
Fresh				Slice. Dot with butter or
Beets		Medium	12 to 20 minutes	margarine. Wrap in heavy-duty
Carrots				foil. Grill, turning occasionally.
Turnips				Grill, turning once. Brush occasionally with melted butter or margarine.
Onion	1/2 inch slices	Medium	8 to 20 minutes	
Potatoes				Wrap individually in heavy-duty foil. Grill, rotating occasionally.
Sweet	Whole	Medium	40 to 60 minutes	
White	6 to 8 ounces	High	45 to 60 minutes	
Frozen				Dot with butter or margarine. Wrap in heavy-duty foil. Grill, turning occasionally.
Asparagus		Medium	15 to 30 minutes	
Broccoli				
Brussels				
Sprouts				
Green beans				
Peas				

FOOD	WEIGHT OR THICKNESS	FLAME SIZE	APPROXIMATE TIME	SPEICAL INSTRUCTIONS AND TIPS
French Fries		Medium	15 to 30 minutes	Place in aluminum foil pan. Grill, stirring occasionally.
MEATS				
Hamburgers	1/2 to 3/4 inch	Medium	10 to 18 minutes	Grill, turning once when juices rise to the surface. Do not leave hamburgers unattended since a flare-up could occur quickly.
		High	8 to 15 minutes	
Tenderloin,				
Porterhouse,				
Rib eye				
Rare	1 inch	High	8 to 14 minutes	Remove excess fat from edge. Slash remaining fat at 2-inch intervals. Grill, turning once.
	1-1/2 inch	High	11 to 18 minutes	
Medium	1 inch	Medium to	12 to 22 minutes	
	1-1/2 inch	High	16 to 27 minutes	
Well-done	1 inch	Medium	18 to 30 minutes	
	1-1/2 inches	Medium	16 to 35 minutes	
Lamb				
Chops & Steaks				
Rare	1 inch	High	10 to 15 minutes	Remove excess fat from edge. Slash remaining fat at 2-inch intervals. Grill, turning once.
	1-1/2 inch	High	14 to 18 minutes	
Medium	1 inch	Medium to	13 to 20 minutes	
	1-1/2 inch	High	18 to 25 minutes	
Well-done	1 inch	Medium	17 to 30 minutes	
Pork Chops	1 inch	Medium	20 to 30 minutes	Remove excess fat from edge. Slash remaining fat at 2-inch intervals. Grill, turning once. Cook well done.
Well-done	1-1/2 inches	Medium	30 to 40 minutes	

FOOD	WEIGHT OR THICKNESS	FLAME SIZE	APPROXIMATE TIME	SPEICAL INSTRUCTIONS AND TIPS
Ribs		Medium	30 to 40 minutes	Grill, turning occasionally. During last few minutes brush with barbecue sauce, turn several times.
Ham steaks				
(precooked)	1/2 inch slices	High	4 to 8 minutes	Remove excess fat from edge. Slash remaining fat at 2-inch intervals. Grill, turning once.
Hot dogs		Medium	5 to 10 minutes	Slit skin. Grill, turning once.
POULTRY				
Broiler/fryer	2 to 3 pounds	Low or	1 to 1-1/2 hours	Place skin side up. Grill,turning and brushing frequently with melted butter, margarine, oil or marinade.
Halved or		Medium	40 to 60 minutes	
Quartered well-done				
Breast well-done		Medium	30 to 45 minutes	
FOOD	WEIGHT OR THICKNESS	FLAME SIZE	APPROXIMATE TIME	SPECIAL INSTRUCTIONS AND TIPS
FISH AND				
SEAFOOD				
Steaks				Grill, turning once. Brush with melted butter, margarine or oil to keep moist.
Halibut	3/4 to 1 inch	Medium to	8 to 15 minutes	
Salmon		High		
Swordfish				
Whole				
Catfish	4 to 8 ounces	Medium to	12 to 20 minutes	Grill, turning once. Brush with melted butter, margarine or oil.
Rainbow trout		High		

GRILL RECIPES

BBQ SALMON
2 large salmon steaks
2 tbs. oil
Salt & pepper
2 oz. thin bacon slices
2 tbs. butter
1 tbs. lemon juice
Sprig of parsley
Lemon wedges

*You can substitute catfish, halibut or cod for salmon.

Preheat the BBQ
Brush the steaks with oil and season with salt and pepper. Place on BBQ grill and cook for 10 minutes, turning steaks over halfway through cooking time.

Meanwhile fry the bacon in a pan on the side burner. Drain on paper towels. Melt the butter in a small saucepan taking care not to discolor it. Arrange the fish and bacon on serving plates. Pour the butter over and sprinkle with lemon juice. Garnish with parsley sprigs and lemon wedges. Serve with boiled potatoes in butter and sprinkled with parsley.

BAKED CHILI CORN
6 medium ears corn, husked
3 tbs. butter or margarine, melted
Dash ground cumin
Dash ground coriander

About ½ hour before cooking, turn the grill on for butter. Place each ear on a heavy-duty foil. In a bowl, combine remaining ingredients. Mix well. Brush 1-1/2 tsp. butter mixture over each ear. Close foil and fold up ends to seal. Place on grill. Cook, turning packets occasionally 10 to 12 minutes or until cooked through.

TANGY SEAFOOD KABOBS
1 lb. Large shrimp, shelled & deveined
¾ Lbs. Sea scallops
2/3 c. chili sauce
¼ c. cider vinegar
3 tbs. Chopped parsley
1 tbs. Vegetable oil
1 tbs. Worcestershire sauce
½ tsp. Prepared horseradish
1 clove garlic, minced
1 20 oz. Can pineapple chunks in juice drained.
In medium bowl, combine shrimp and scallops. In small bowl, combine chili sauce and next six ingredients. Pour over seafood. Toss to coat. Cover, refrigerate 2 hours.

Half-hour before cooking, turn the burner to the grill on high. Drain seafood-reserving marinade. On each of twelve 10 in. skewers, thread 2 shrimp and 2 scallops, alternating with pineapple chunks. Place skewers on grill. Cook 7-10 minutes, basting and turning often.

PORK CHOPS
4 pork chops
Marinade
1 large onion
2 tbs. lemon juice or vinegar
2 tbs. oil
½ tsp. freshly ground black pepper
1 tsp. sugar
½ tsp. paprika
1 clover garlic
Peel, grate onion, and add rest of the ingredients except the pork chops. Mix well. Pour over chops and marinate one hour in a cool place. Turn the BBQ grill on high. Heat 10 minutes. BBQ the chops brushing with the marinade occasionally. Serve with mixed salad, dressed with vinaigrette flavored with fresh dill.

BARBECUED POTATOES and CHEESE
1 –1/2 cups shredded cheddar cheese
1 can (10-3/4 oz.) condensed cream of mushroom soup
1/3 cup milk
2 tbs. barbecue sauce
¼ tsp. oregano
¼ tsp. salt
1/8 tsp. pepper
4 cups thinly sliced potatoes (4 medium-sized potatoes)

Preheat grill. Combine cheese, condensed soup, milk, BBQ sauce, oregano, salt and pepper in a large mixing bowl. Stir in potatoes until well coated. Turn into well-buttered 1-1/2 quart rectangular baking dish. Cover dish with aluminum foil. Bake covered 25 minutes on medium with the lid of your BBQ grill closed. Remove foil and continue baking 15 minutes longer or until potatoes are tender. Let stand 5 minutes before serving.

BARBECUED LONDON BROIL
4 to 6 servings
¾ c. Italian dressing
1tsp. Worcestershire sauce
1tsp. Dry mustard
¼ tsp. Thyme, crushed
1 medium onion, sliced
1 pound flank steak, scoured
2 tbs. Butter, melted

Combine first 4 ingredients, add onion and marinade flank steak with it. Refrigerate at least 4 hours or overnight. Remove steak and grill on preheated BBQ grill. Grill 5 to 7 minutes on each side basting frequently with the marinade. In the meantime sauté onions from the marinade in butter in a skillet on grill side burner for 3 minutes. To serve, slice steak diagonally into thin slices, sprinkle onions over top. Garnish with vegetable kabobs.

VEGETABLE KABOBS
3 medium-size zucchini
12 cherry tomatoes
12 fresh mushrooms
Grated parmesan cheese

Parboil whole zucchini 5 minutes on grill side burner or until just tender. Drain and cut into ½ inch slices. Thread zucchini, tomatoes and mushrooms alternately on each of six skewers. Brush with marinade made of Italian dressing, Worcestershire sauce, mustard and thyme. Grill 5 to 7 minutes turning and basting occasionally. Sprinkle liberally with Parmesan cheese.

FAJITAS
1-1/2 lb. flank steak or boned chicken breasts
2 tbs. oil
½ cup lime juice
½ tsp. salt
½ tsp. celery salt
¼ tsp. garlic powder
½ tsp. pepper
¼ tsp. oregano
¼ tsp. cumin
Flour tortillas
Lemon

Pound flank steak to ¼ inch thickness or flatten chicken breasts. Mix oil, limejuice and seasonings in a zip lock bag. Add meat and shake bag to coat the meat. Refrigerate overnight or at least 6 to 8 hours. Wrap tortillas in foil. Remove meat from marinade. Cook on a pre-heated gas grill for 5 to 8 minutes on each side. While meat is cooking,

heat tortillas on grill. Slice meat across grain in thin slices. Place on hot platter. Squeeze lemon juice over. Wrap meat and any of the following toppings in tortillas: chopped tomatoes, guacamole, sour cream, and taco sauce.

BEEF AND LAMB KABOBS
Serve 4
½ lb. boneless sirloin or beef cut into 1" cubes
½ lb. boneless loin of lamb cut into 1" cubes
2/3 c. water, divided
¼ c. chopped onion
2 tbs. soy sauce
¼ c. vegetable oil, divided
1 tbs. dark brown sugar
1 tbs. fresh lemon juice
2 cloves garlic, minced
¼ tsp. ground cumin
¼ tsp. ground coriander
¼ tsp. ground turmeric
1/8 tsp. ground red pepper
1/8 tsp. ground ginger
1 red pepper cut into chunks
1 large banana, cut into chunks
8 small mushrooms
1/3 c. smooth peanut butter

In blender, process 1/3 c. water, onion, soy sauce, 2 tsp. oil and the next 8 ingredients until smooth. Pour over meat cubes and marinate about 4 hours, turning occasionally. Drain and reserve marinade. Onto four 12 in. skewers alternately thread meat, pepper, banana and mushrooms. Preheat grill. Brush the kabobs with oil. Grill 7-8 minutes each side.

Bring marinade to boil on the side burner in a saucepan. Add remaining 1/3 c. water and peanut butter. Stir to blend. Heat through. If sauce gets too thick, add 1 tbs. water. Serve sauce with kabobs.

EGGPLANT CAVIAR
1 large eggplant
2 tbs. olive oil
2 tbs. wine vinegar
2 tbs. finely chopped onion
½ clove garlic, minced
1 medium tomato, chopped salt and pepper

Roast eggplant on gas grill over medium flame, turning occasionally until thoroughly cooked. This may take 30 minutes. Remove from grill and cool for handling. Strip off the skin and chop eggplant finely. Add all the seasonings. Chill thoroughly and serve on toast.

CHICKEN TANDOORI STYLE
8 large chicken thighs or drumsticks
1 c. plain nonfat yogurt
½ c. lemon juice
2 tsp. salt
½ tsp. cayenne
½ tsp. black pepper
½ tsp. crushed garlic
½ tsp. grated ginger
1 tbs. corn oil

Combine all the ingredients in a large mixing bowl and marinate the chicken for 8 hours in the refrigerator. Drain the chicken and spread on the spit running the rod on the fleshier side of the bone.

Bake using the rotisserie. Cook on medium high heat for 40 minutes basting occasionally with the remainder of the marinade mixture. Serve with sliced onions and lemon wedges.

SPARE RIBS
Marinade:
1 c. soy sauce
½ c. honey
½ c. vinegar
½ c. dry sherry
2 tsp. chopped garlic
2 tsp. sugar
1 c. water
1 chicken bouillon cube
1 can beer for basting sauce

Marinade ribs for 3 hours. Use marinade for basting by adding beer to it. Place pan under the ribs and baste frequently. To cook ribs select lean, meaty ribs and accordion pleat them with your spit. Slide four-prong meat hook down the length of spit and tighten. At the beginning of the rack and to its center, penetrate the second rib with the pointed end of the spit and push it between the meat. Skip a couple and continue the process until the entire rack is accordion pleated. Fasten the second meat hook into the rack. Turn rotisserie burner on high. Bake using the rotisserie for 50 minutes or until done.

PORK ROAST
Apple cider vinegar basting sauce:
1 c. apple cider vinegar
6 oz. water
½ stick butter
Salt, pepper, parsley and garlic seasoning
2 oz. lemon juice
10 lbs. pork roast

Time: 1-1/2 hours to 2 hours
Bring pork to room temperature before placing it on the rotisserie spit rod. Place on the rod and test for balance. Light rotisseries burner. Turn control knob to high. Use the above basting sauce for rotisserie baking

TURKEY
12 lb. turkey
Beer basting sauce:
1 can beer
12 oz. water
1 stick butter
1 tsp. salt
1 tsp. pepper
½ tsp. garlic flakes
1 tsp. parsley

Thaw the bird completely. Wash inside out. Securely tie the legs and wings before placing the turkey on the rotisserie spit rod. Light rotisseries burner. Turn to high. Combine all the ingredients for basting sauce in a shallow pan. Place it under the turkey 15 to 20 minutes. Cook for approximately 3 hours. The basting sauce combined with turkey drippings makes delicious gravy.

LIMITED WARRANTY
MODEL # 750-0141/740-0141
STAINLESS STEEL BUILD-IN OUTDOOR GAS GRILL

Nexgrill Industries, Inc. warrants to the original consumer/purchaser of each Jenn-Air Outdoor Gas Grill that when subject to normal residential use, it is free from defects in workmanship and materials for the periods specified below. This warranty excludes grills used in rental or commercial applications.

Component	**Warranty Period:**
Stainless Steel Burners:	Lifetime
Stainless Steel Flame Tamer:	Lifetime
Stainless Steel Cooking Grids:	Lifetime
Valves, Nature Gas Regulator and 12' Gas Hose:	1 Year
Igniter and related Parts:	1 Year
All Stainless Steel Parts:	Lifetime

Our obligation under this warranty is limited to repair or replacement, at our option, of the product during the warranty period. The extent of any liability of Nexgrill Industries, Inc. under this warranty is limited to repair or replacement. This warranty does not cover normal wear of parts, discoloration of the stainless steel parts, or damage resulting from any of the following: negligent use or misuse of the product, improper use of the fuel/gas supply, use contrary to the operating instructions, or alteration by any person other than our factory service center. The warranty period is not extended by such repair or replacement.

Product repair as provided under this warranty is your exclusive remedy. Nexgrill Industries, Inc. shall not be liable for any incidental or consequential damages for breach of any express or implied warranties on its products. Except to the extent prohibited by applicable law, any implied warranty of merchantability or fitness for a particular purpose on this product is limited by the duration of the above warranty. Some states do not allow the exclusion or limitation of incidental or consequential damages, or allow limitations on how long an implied warranty lasts, so the above limitations or exclusions may not apply to you. This warranty gives you specific legal rights, and you may have other rights, which vary from state to state.

WARRANTY CLAIM PROCEDURE

If you require service or parts for your grill, please contact our Warranty Service Center for factory direct assistance. Our hours of operation are 7 AM to 6 PM PST Monday to Friday, 8 AM to 12 PM PST on Saturday. Our telephone number is 1-800-554-5799, FAX number 1-800-598-8829. Please direct all correspondence to: Nexgrill Industries, Inc. 280 Machlin Court, City of Industry, CA 91789, ATTN: Warranty Service Center.

*Jenn-Air is a trademark of the Maytag Corporation and is used under license to Lowe's Company Inc.

Printed In China

TABLE OF CONTENTS

SECTION ONE
Safety Instructions 1-4
Placement of the Grill 4

SECTION TWO
Model Specifications 5
Island Construction 6-7
Front View of Opening 8
Side View of Opening 9

SECTION THREE
Battery Installation 10
LP Gas Hook Up 11
Propane Tank Assembly 12
Installation of NG Regulator 13
Natural Gas Hook-Up 14

SECTION FOUR
Leak Testing 15
Installer Final Checklist 16
Operating Instructions 17-18
Lighting Instructions 19
Lighting Illustrations 20
To Match Light the Grill 21
Care and Maintenance 22
Troubleshooting 23

SECTION FIVE
Exploded View Model 750-0141 24
Parts List Model 750-0141 25
Exploded View Model 740-0141 26
Parts List Model 740-0141 27

SECTION SIX
Grilling Hints 28
Grill Cooking Chart 28-30
Grill Recipe Suggestions 31-32

SECTION SEVEN
Limited Warranty 33

WARNING

To reduce the risk of fire, burn hazard or other injury, read this Care and Use Manual carefully and completely before using your grill.

CONSUMER: RETAIN THIS MANUAL FOR FUTURE REFERENCE

INSTALLER: LEAVE THIS MANUAL WITH CONSUMER