TS-907

INFRARED TRANSMITTER/RECEIVER



The TS-907 Infrared Transmitter/Receiver of the Infrared Conference system is designed for high ceiling applications. Since the system is cordless, it can be easily installed and removed. Communications between the TS-907 and conference units are performed by means of infrared signals and the TS-907 permits transmit and receive with the Central unit. It can be mounted not only to the ceiling and wall but on the microphone stand.

Key features

- Cordless, easy to install and remove
- Communication between units performed by means of infrared signals
- Variety of mounting methods: ceiling, wall and microphone stand
- Designed for high ceiling applications

Specifications

Power Source	24 V DC (supplied from the Central unit)
Current Consumption	Max. 180 mA
Infrared Emitter/Detector	
Wavelength	870 nm (AM: Brightness modulation)
Modulation Method	Frequency modulation
Carrier Frequency	Transmission: Audio channel 1: 7.35 MHz Audio channel 2: 8.10 MHz Audio channel 3: 8.55 MHz Audio channel 4: 9.15 MHz Control channel: 6.45 MHz Reception: Base language channel: 1.95 MHz Translation language channel: 2.25 MHz
Acceptable Angle	Vertical: 90° (45° + 45°), Horizontal: 360°
Emission Angle	Vertical: 90° (45° + 45°), Horizontal: 360°
Communication Area	Approx. 6 m (19.69 ft) in radius from the point underneath the unit (ceiling height: 5 - 7 m (16.4 - 22.97 ft)
Connection Terminal	BNC jack
LED Indicator	Power
Operating Temperature	0 °C to +40 °C (32 °F to 104 °F)
Operating Humidity	90 %RH or less (no condensation)
Finish	Dome: PC resin, visible light cut filter Base: ABS resin, black
Dimensions	Ø120 x 71.3 (H) mm (4.72 x 2.81")
Weight	230 g (0.51 lb) (unit only)
Included Accessories	Mounting bracket x1, Stand mounting bracket x 1, Stand mounting bracket attaching screw x3, Thread Adapter (U5/16 - NS5/8) x1
Optional Accessories	Microphone stand (The mounting thread size must be U5/16 or NS5/8.)

Dimensions

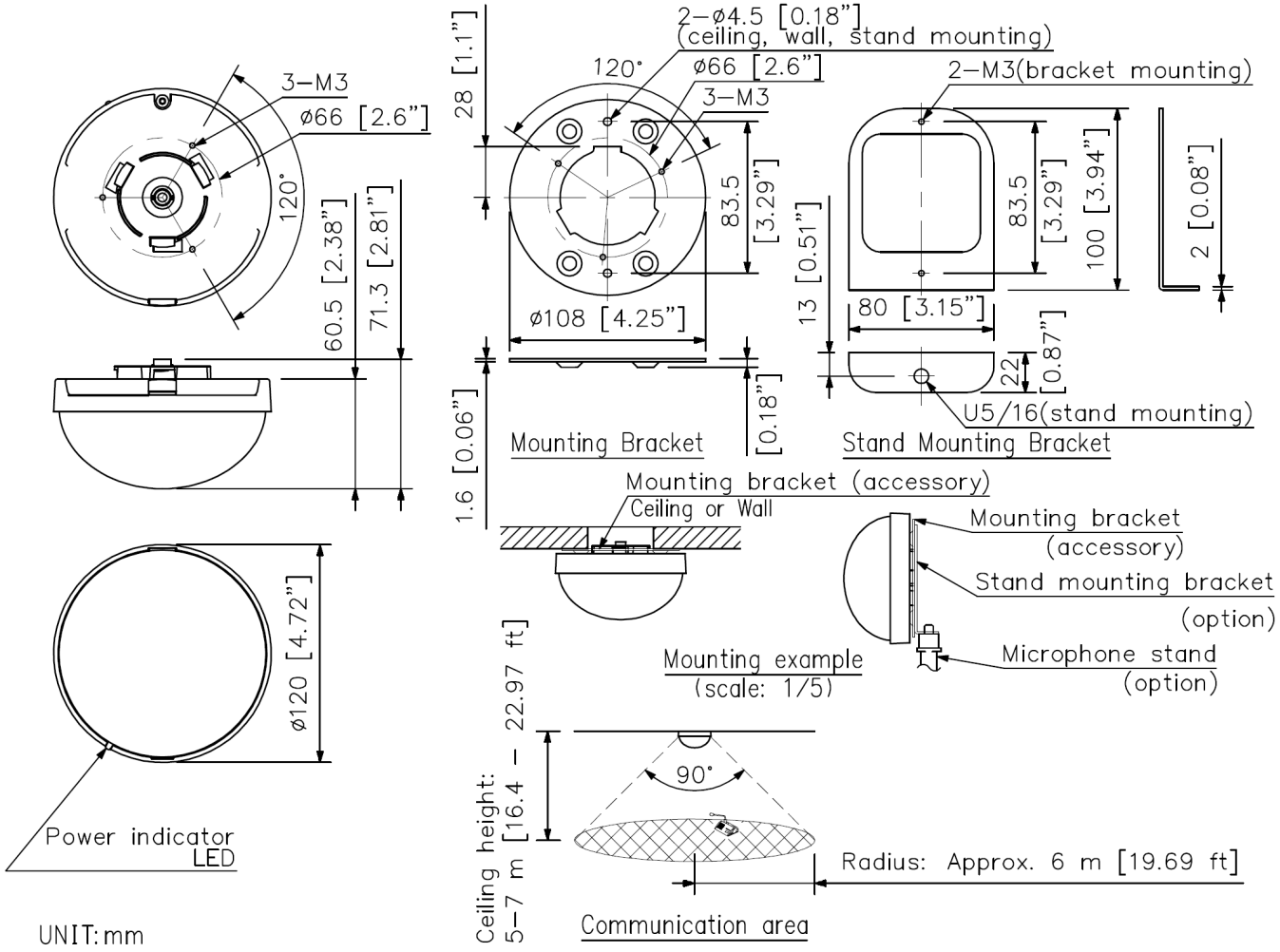
3–M3
ø66 [2.6"]
120°
60.5 [2.38"]
71.3 [2.81"]
ø120 [4.72"]
Power indicator
LED
UNIT: mm
28 [1.1"]
2–ø4.5 [0.18"]
(ceiling, wall, stand mounting)
120°
ø66 [2.6"]
3–M3
83.5 [3.29"]
ø108 [4.25"]
1.6 [0.06"]
[0.18"]
Mounting Bracket
2–M3(bracket mounting)
13 [0.51"]
83.5 [3.29"]
100 [3.94"]
2 [0.08"]
80 [3.15"]
22 [0.87"]
U5/16(stand mounting)
Stand Mounting Bracket
Mounting bracket (accessory)
Ceiling or Wall
Mounting bracket
(accessory)
Stand mounting bracket
(option)
Microphone stand
(option)
Mounting example
(scale: 1/5)
Ceiling height:
5–7 m [16.4 – 22.97 ft]
90°
Radius: Approx. 6 m [19.69 ft]
Communication area

A&E specifications

The Infrared Transmitter / Receiver Unit shall include the following functionality: Facilitates wireless communication between the Chairperson Unit and Delegate Unit. The Infrared Transmitter / Receiver Unit connects to the Central Unit using coaxial cable. Compatible coaxial cable types shall include: RG-59/U, RG-6/U and RG-11/U. The Infrared Transmitter / Receiver Unit can be mounted using the following configurations: Ceiling Mounted, Wall Mounted using the supplied mounting bracket or Mounted to an optional Microphone Stand using the supplied stand mounting bracket. The optional Microphone Stand mounting thread size shall be W 5/16. Power requirement shall be 24VDC, maximum 100 mA supplied from the Central Unit via the coaxial cable. The Infrared Transmitter / Receiver Unit shall weigh 0.5 lbs (230 g) and shall be constructed of: Dome shall be PC resin, visible light cut filter. Base: ABS resin, black with dimensions 4.72” diameter (120mm) x 2.8” height (71.3mm).