设备手册

IO控制模块

CR2040
CR2041
CR2042

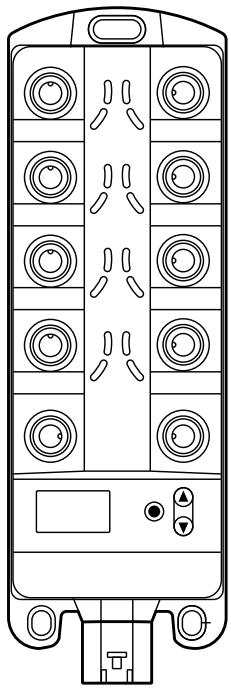

CN

80268386 / 00 07 / 2021

目录

1 初步说明 4
1.1 符号说明 4
2 安全说明 5
3 功能和特性 5
4 功能 6
5 安装 6
5.1 安装位置 6
5.2 安装表面 6
5.3 固定 7
5.4 电缆密封件 7
6 电气连接 8
6.1 配线 8
6.2 一般配线信息 8
6.3 连接技术 9
6.4 连接附件 10
6.5 频率输入 10
6.6 反极性保护 10
6.7 输入端信号发生器的供电 10
6.8 执行器与输出端的连接 10
6.9 保险丝 10
6.10 连接类型示例 12
6.10.1 CR2040 12
6.10.2 CR2041 13
6.10.3 CR2042 14
7 操作和显示元件 15
7.1 菜单结构 16
7.2 输入/输出的状态表示（I/O LED，黄色） 17
8 设定 18
8.1 I/O 模块 18
8.1.1 显示模式 18
8.1.2 参数设定 18
8.1.3 参数列表 20
8.2 控制器 20
8.2.1 编程 20
8.3 所需文档 20
8.4 所需硬件 20
9 技术资料 21
9.1 CR2040 21
9.2 CR2041 28
9.3 CR2042 35

10 维护、修理及处理 43
11 认证/标准 43
12 Appendix 44
12.1 EMCY Object 44
12.2 Object directory CR204x 45
12.2.1 Device-specific CR2040 48
12.2.2 Device-specific CR2041 69
12.2.3 Device-specific CR2042 93
12.3 SDOs error messages 125
12.3.1 CR2040 125
12.3.2 CR2041 127
12.3.3 CR2042 129

CN

此文档为原厂说明。所有使用的商标和公司名称均受相应公司的版权保护。

1 初步说明

如需技术资料、认证、附件和详细信息，请访问 www.ifm.com。

1.1 符号说明

► 说明
> 反应，结果
[...] 按键、按钮或指示标记
→ 交叉引用


重要说明
如不遵守，可能导致故障或干扰。


信息
补充说明


警告！
严重人身伤害警告。可能导致死亡或严重的永久性伤残。


小心！
人身伤害警告可能导致轻微的可逆伤害。

注意!
财产损失警告.

2 安全说明

- 所述设备为集成至系统的子组件。 制造商需为系统的安全负责。 系统制造商根据运营商和系统用户提供的法规和规范要求来实施风险评估和存档。 该存档必须包含针对运营商和用户（如适用，还要包含系统制造商授权的维修人员）的所有必要信息和安全说明。
- 设定产品前请阅读本文档，并在产品整个使用周期内妥善保管本文档。
- 产品必须适合相应的应用和环境条件，且不受任何限制。
- 仅将产品用于指定用途(→ 3 功能和特性)。
- 如果未遵照操作说明或技术资料，则可能导致人身伤害和/或财产损失。
- 若装置发生故障，请联系制造商。 请勿擅自改装本装置。
- 必须由获得相关活动授权的合格人员执行产品的安装、电气连接、设置、编程、配置、操作及维护工作。
- 防止产品、连接器和电缆损坏。
- 损坏设备请予以更换，否则技术资料与安全将无法确保。

注意!

由于焊接造成的过电流、焊渣与脏污

> 对装置造成损害，降低电气安全性

► 对底盘架构的焊接工作仅可由合格人员执行。

► 卸下并覆盖电池的正负端子.

► 在车辆或装置上焊接前，将装置的所有触点与车载系统断开连接。

► 将焊接装置的接地端子直接连接至要焊接的部件。

► 请勿用焊接装置的焊接电极或接地端子触摸装置或电缆。

► 保护装置（包括所有连接器与连接电缆）不受焊渣和脏污影响。

3 功能和特性

“ioControl”系列可自由编程的控制器符合艰难条件下使用的规格： 如此包含更大的温度范围、可承受更强振动、更大 EMC 干扰和潮湿环境。

使用应用程序软件，用户可配置输入和输出以满足应用需求。 控制器可用作 CANopen 装置、主站或智能 I/O 模块(→ 9 技术资料)。

与模块化 ioControl 和 Basic 设计的产品结合使用，可实现特定应用的扩展和调整。

CN

警告！

安全功能劣化

> 可能存在人员或安装的潜在危险

该装置不允许用于操作员保护领域中与安全相关的任务。

► 仅可在技术资料限制范围内使用装置
(→ 9 技术资料)。

4 功能

- 用户可通过符合 IEC 61131-3 的编程系统 CODESYS 2.3 来轻松创建应用程序软件。 装置交付时预先配置为 CANopen 装置。
- 2 个 CAN 接口
- 可配置输入/输出
- 状态 LEDs、I/O LED 和 4 位 10 段显示屏
- 操作键

如需详细信息与配件，请访问 www.ifm.com。

5 安装

5.1 安装位置

容许的安装位置如下：

- 厢体内侧
- 主体
- 车辆车架

不允许安装于发动机上。

对于非移动应用，适用的指令必须遵循，还需考虑指定的环境条件。

5.2 安装表面

外壳不得承受任何扭转力或机械应力。

► 将装置安装于平坦表面上。 使用合适的补偿元件。

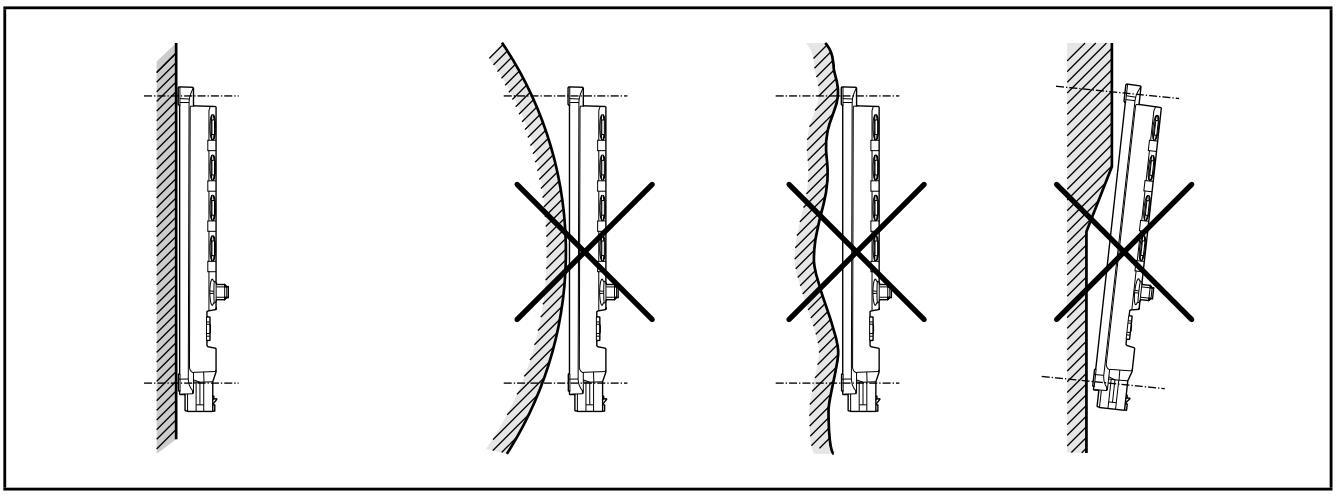

安装表面

5.3 固定

- ► 将随附的空心铆钉从装置后侧插入 3 个固定孔中。
- ► 使用 3 个垫圈和 M5 螺丝固定装置。轮流拧紧螺丝。

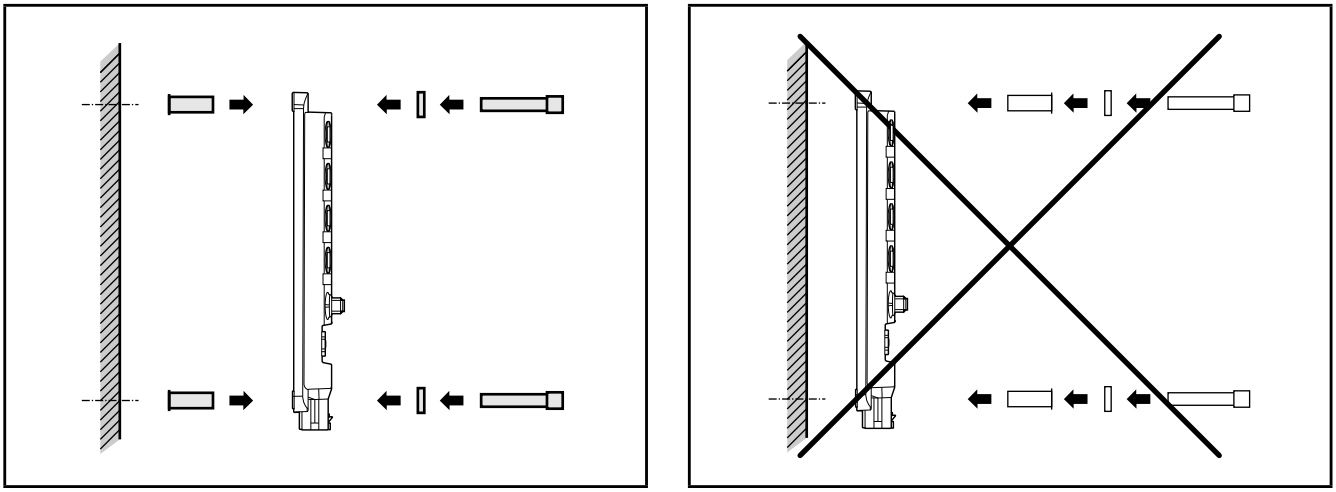

空心铆钉的使用

拧紧扭矩为： 2.0 Nm
孔眼尺寸(→ 9 技术资料)

要使用的螺丝（示例):	标准
带六角形凹头的圆柱螺丝 (M5 x L)	DIN EN ISO 4762
带内六角和矮头的圆柱螺丝 (M5 x L)	DIN 7984

CN

5.4 电缆密封件

在安装之前和安装过程中，请注意污染程度(→ 9 技术资料)，直到通过连接器/堵头确保防护等级为止。 防护等级 IP 65 / IP 67 仅可在所有端口均使用连接器或堵头方式密封情况下方可保证。

设备的间隙尺寸可能会有所不同。

6 电气连接

- ► 在安装前，请将设备从主电源上断开；如有必要，也请断开独立供电的输出负载电路。
- ► 遵守有关电气设备安装的国内和国际法规。
- ► 请注意 IEC EN 60204 相关要求。

装置可触及的表面采取符合 IEC 61010-1 的基本绝缘与电路隔绝（二次回路的电压最高为 32 V DC ，主电路供电电源能耐 300 V 的过电压，类别 II 电压）。

外部配线必须以确保与其他电路所需隔绝的方式进行。

6.1 配线

接线 (→ 9 技术资料)

连接终端的信号必须符合技术手册规定和/或设备标签指定，符合 ifm electronic 认证的附件也可以连接。

该装置的供电采用通过移动车载系统设计（12/24 V DC 标称电压）或根据技术资料和国家规定采用 SELV/PELV。 供电直接传送至连接的传感器/执行器，没有电气隔离。

6.2 一般配线信息

供电电缆和 CAN2 接口通过装置底侧的 X1 连接器来连接。 输入/输出、CAN1 接口和 CAN 供电通过外壳前方的 M12 连接器连接。

接线 (→ 9 技术资料)

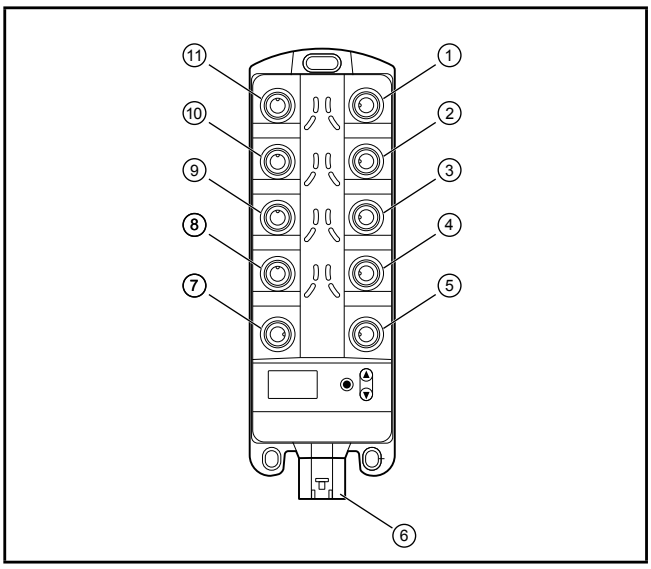

1: 连接 8
2： 连接 6
3： 连接 4
4： 连接 2
5： CAN1 OUT
6： X1 - 电源连接器连接
7： CAN1 IN
8： 连接 1
9： 连接 3
10： 连接 5
11： 连接 7

连接器区域

连接	CR2040	CR2041	CR2042	针数
1	IN00 / IN08	OUT00 / OUT08	IN00 / IN04	5
2	IN01 / IN09	OUT01 / OUT09	OUT00 / OUT04	5
3	IN02 / IN10	OUT02 / OUT10	IN01 / IN05	5
4	IN03 / IN11	OUT03 / OUT11	OUT01 / OUT05	5
5	IN04 / IN12	OUT04 / OUT12	IN02 / IN06	5
6	IN05 / IN13	OUT05 / OUT13	OUT02 / OUT06	5
7	IN06 / IN14	OUT06 / OUT14	IN03 / IN07	5
8	IN07 / IN15	OUT07 / OUT15	OUT03 / OUT07	5
CAN1 IN	CAN1 接口			5
CAN1 OUT	CAN1 接口（如用于回路）			5
X1	供电与 CAN2 接口			6

错误的连接方式可能会导致损坏装置。
► 遵守安全说明 (→ 2)。

6.3 连接技术

► 一般而言，所有电源和信号电缆必须单独敷设。
► 使用可能的最短路线，将电源和信号电缆敷设于远离装置处。
► 注意装置标签。
► 使用带镀金触点的 M12 连接器。
► 装置中的 M12 连接部件符合 EN 61076-2-101 标准。 为确保符合 EN 60529 的防护等级和侵入防护，必须使用通过 EN 61076-2-101 标准的电缆。 系统制造商承诺确保由他们切割成一定长度的电缆的侵入防护。
► 根据电缆制造商的指示进行固定。 最大可允许 3 Nm。

CN

- ► 在安装过程中，请将 M12 连接器垂直放置，令连接螺母不致损伤螺纹。
- ► M12 连接器最大弯矩： 4 Nm.
- ► 用保护盖覆盖未使用的插座。拧紧扭矩： 0.8 $^{\pm 0,1}$ Nm
- ► CAN 连接采用双绞线电缆。
- ► 在电缆接口后方出线留400mm，为引出电缆释放应力。

6.4 连接附件

有关可用附件的信息，请访问 www.ifm.com。

6.5 频率输入

CR2040 / CR2042:

- ► 通过屏蔽电缆操作频率输入，以便让有用的信号不会受到外部干扰的影响。

6.6 反极性保护

注意!

缺乏反极性保护

反极性保护仅可在通过车载系统（通过电池）供电时确保，仅限供电机型整体反转（电池连接错误）。 反极性造成过电流时，上游保险丝快速关闭即反极性保护的基本原理。 若通过 SELV/PELV 供电，反极性保护将无法确保。

> 对装置的损坏

- ► 在将连接器连接至装置前，确保电缆末端均适当连接至连接器，同时注意车载系统供电。

6.7 输入端信号发生器的供电

CR2040 / CR2042:

- ► 使用对应连接器的传感器电压 VBB_S 作为输入端信号发生器（如开关或传感器）的供电。
- ► 如输入（开关或传感器）通过外部电压供电，则请保护供电电流不得超过 3 A。

6.8 执行器与输出端的连接

CR2041 / CR2042:

通过 M12 连接器 GND 连接（插脚 3）的总电流不得超过 4 A。 如有必要，连接器两个输出（插脚 2 和插脚 4）的负载分配必须进行对应调整。

6.9 保险丝

- ► 必须保护各条独立电路，以便保护整个系统。

标记		电位	连接器： 插脚	保险丝
VBBS	电源传感器/模块	8...32 V DC	AMP 连接器： 插脚 4	CR2040: 3 A CR2042: 3 A
VBB1	电源输出 CR2040: 不可用 CR2041： OUT00, 02, 04, 06, 08, 10, 12, 14 CR2042: 不可用	8...32 V DC	AMP 连接器： 插脚 4	CR2040: - CR2041: ≤ 25 A CR2042: -
VBB2	电源输出 CR2040: 不可用 CR2041： OUT01, 03, 05, 07, 09, 11, 13, 15 CR2042: OUT00...07	8...32 V DC	AMP 连接器： 插脚 6	CR2040: - CR2041: ≤ 25 A CR2042: ≤ 25 A
VCAN	可选供电 CAN1 接口 CR2040: 已连接至 VBBS CR2041： 未连接至 VBBS CR2042： 已连接至 VBBS	8...32 V DC	CAN IN: 插脚 2+3	CR2040: - CR2041: 3 A CR2042: -

► 请将属于供电的接地针脚（GND_1、GND_2，如适用 GND_{CAN}）连接至公用接地。

CN

6.10 连接类型示例

6.10.1 CR2040

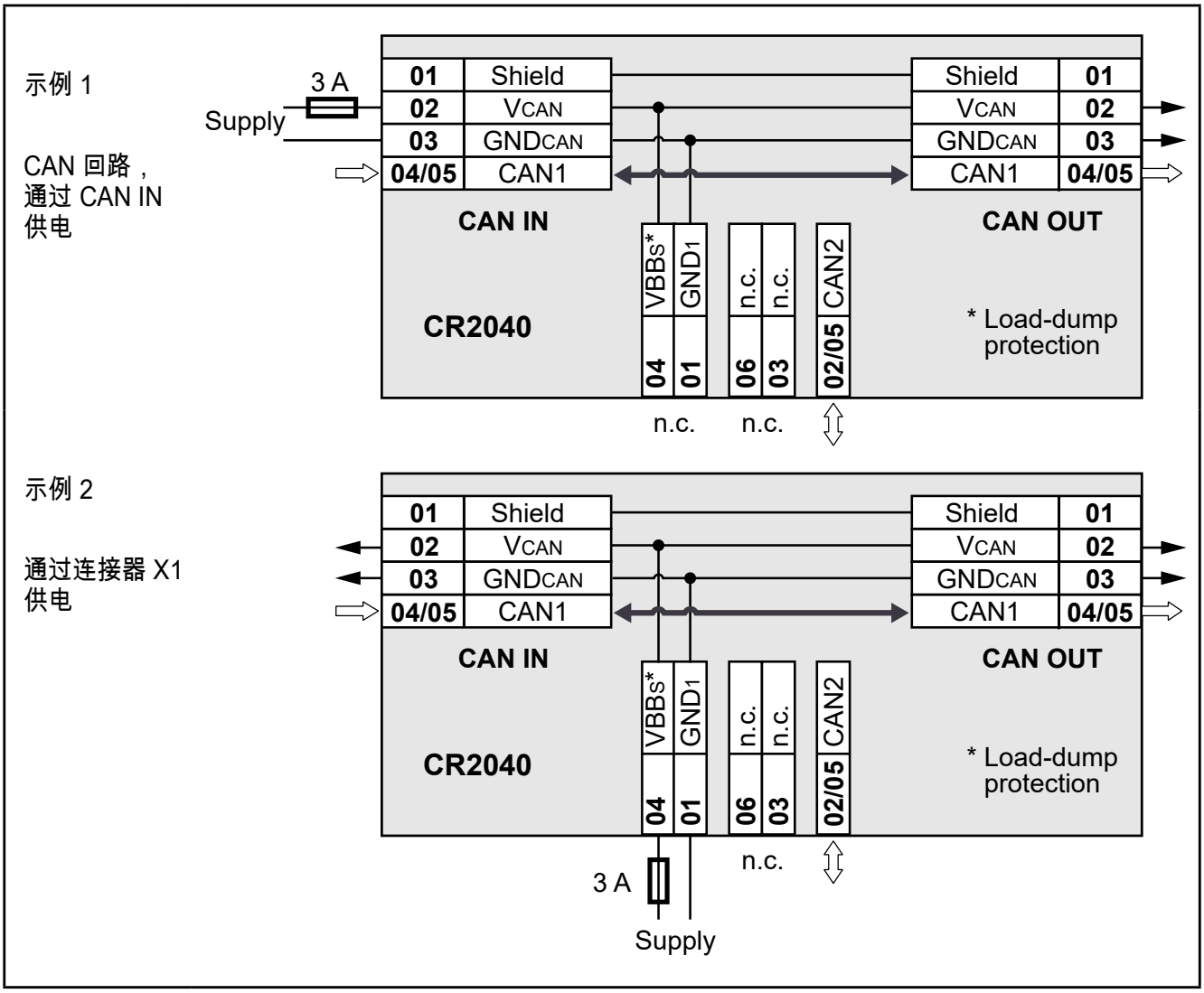

6.10.2 CR2041

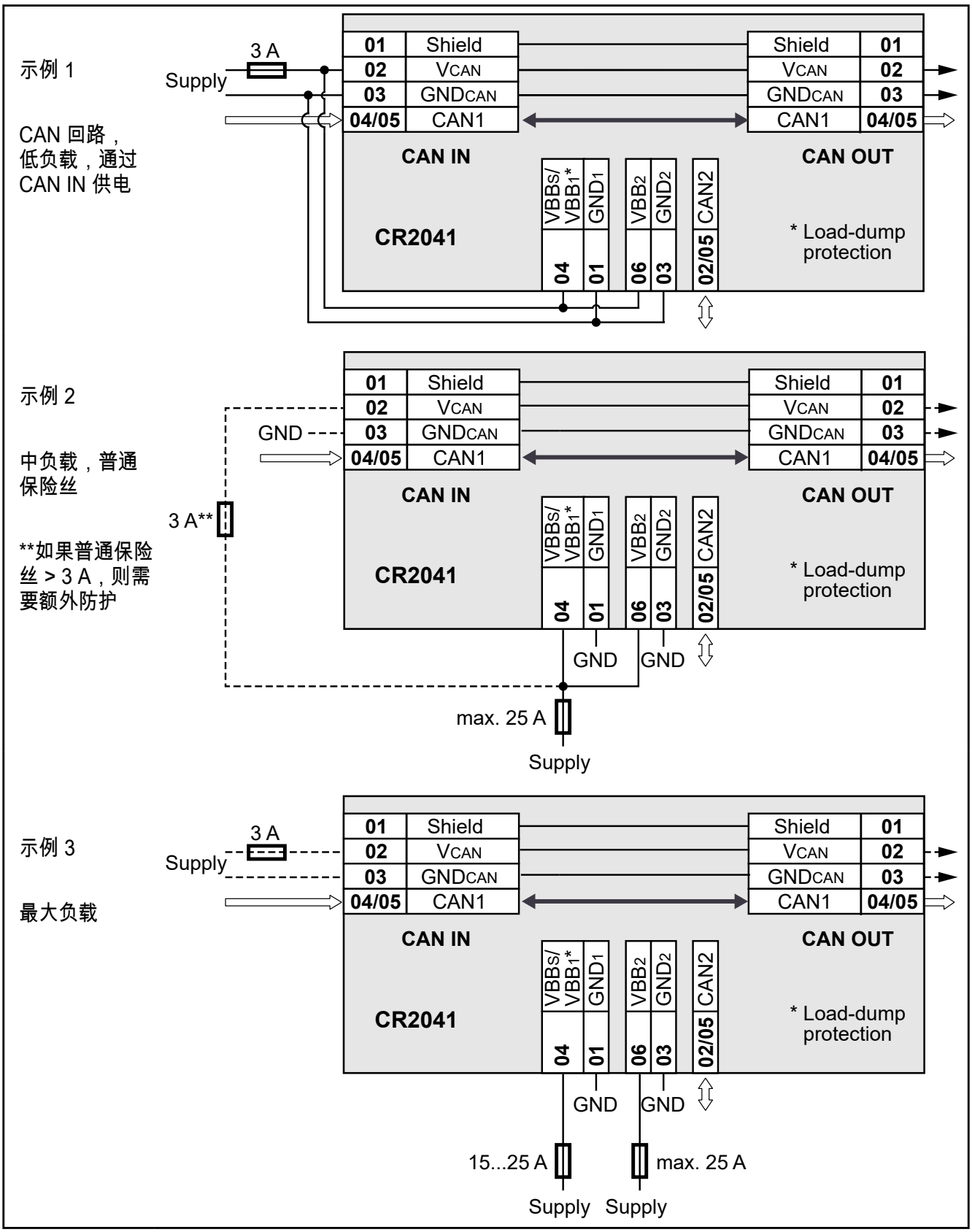

针对车载系统过电压的防护仅可在连接 VBB_S/VBB_1 受到至少 15 A（示例 3）防护或所有供电电压均通过普通保险丝（示例 1 和 2）进行防护的情况下，方可确保。

CN

6.10.3 CR2042

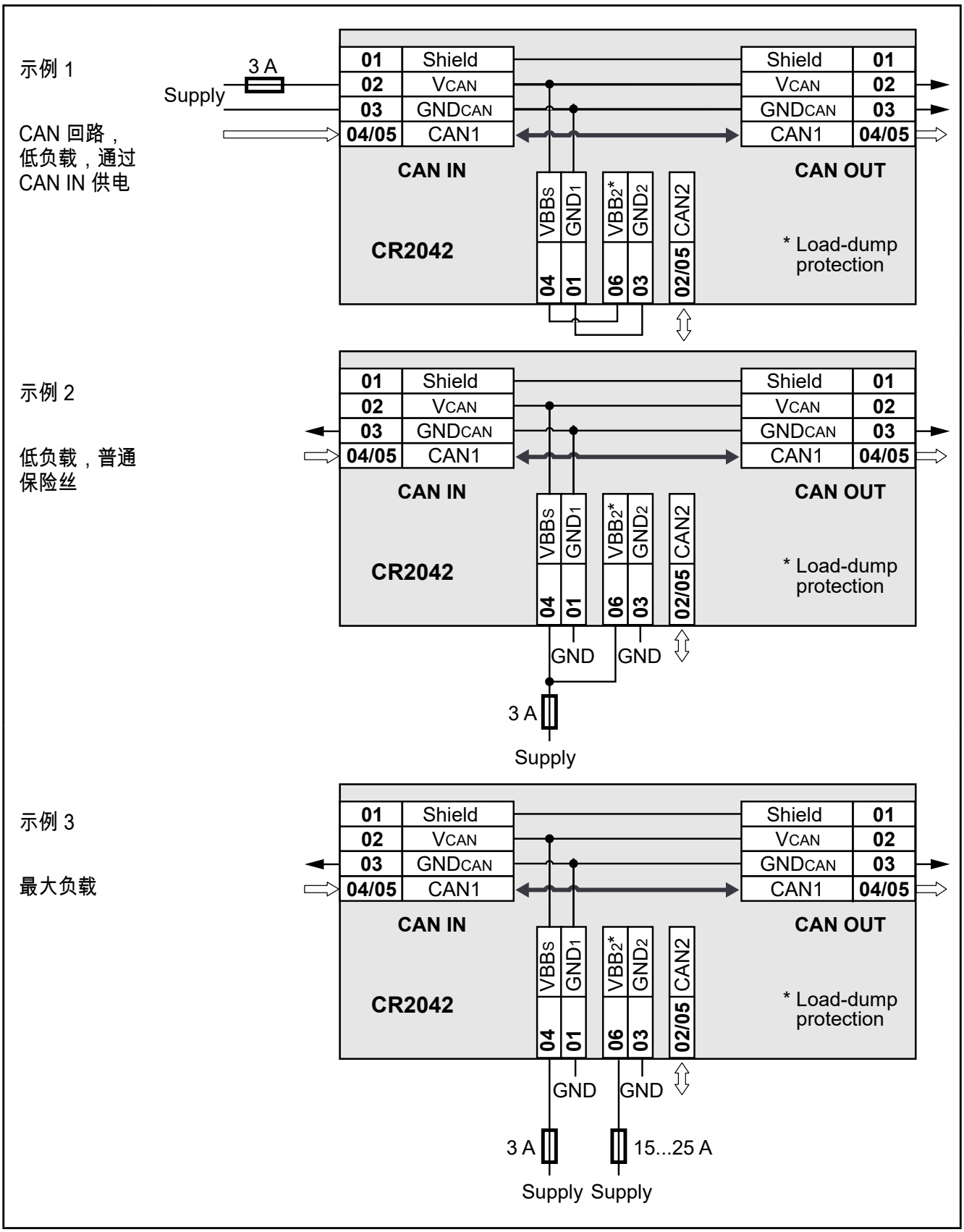

针对车载系统过电压的防护仅可在连接 VBB_2 受到至少 15 A（示例 3）防护或所有供电电压均通过普通保险丝（示例 1 和 2）进行防护的情况下，方可确保。

7 操作和显示元件

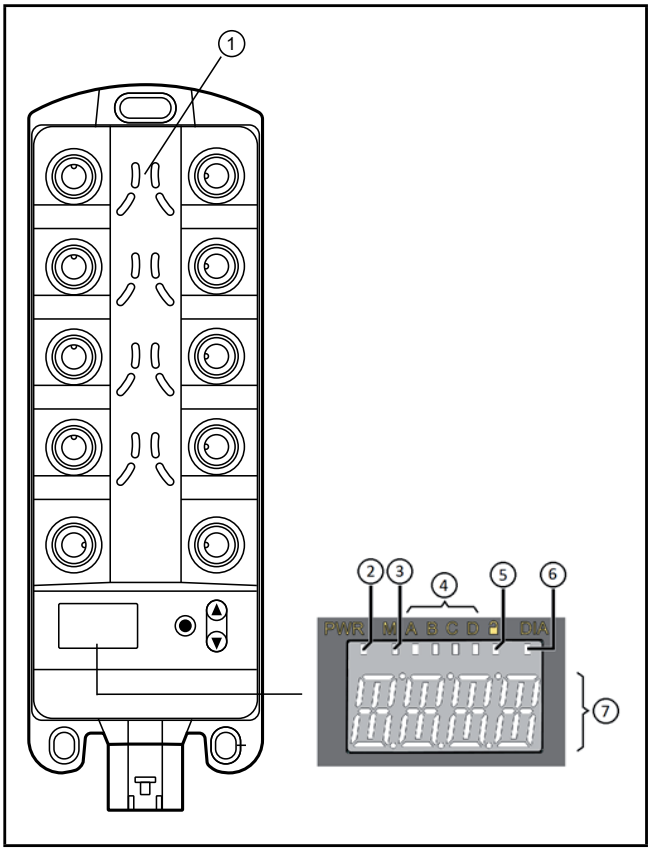

1: I/O LED (黄色)
2： 电源 LED (绿色)
3： 模式 LED (绿色)
4： 应用 LED A...LED D (绿色)
5： 锁定 LED (绿色)
6： 诊断 LED (红色)
7： 4 位 10 段显示屏

指示器

10 段显示屏(→ 9 技术资料)

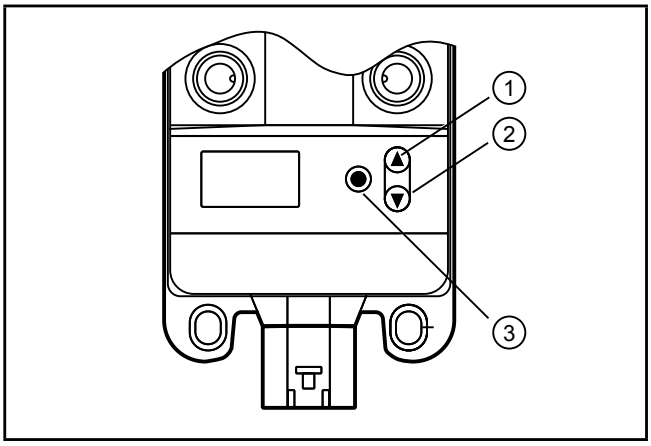

1: UP 按钮
2： DOWN 按钮
3： ENTER 按钮

操作元件

按钮功能(→ 8.1 I/O 模块)。

手动操作用操作元件
不允许使用带尖头的工具进行操作。 按钮可能受损，从而影响防护等级。

灌注混合物可能会对 10 段显示器的视野产生不利影响。

CN

显示屏显示亮度可能有所差异。

7.1 菜单结构

以下对菜单结构的描述遵照 I/O 模块的出厂设定。 若装置配置为控制器，则必须定义对应的菜单结构（请参见编程手册 ioControl）。

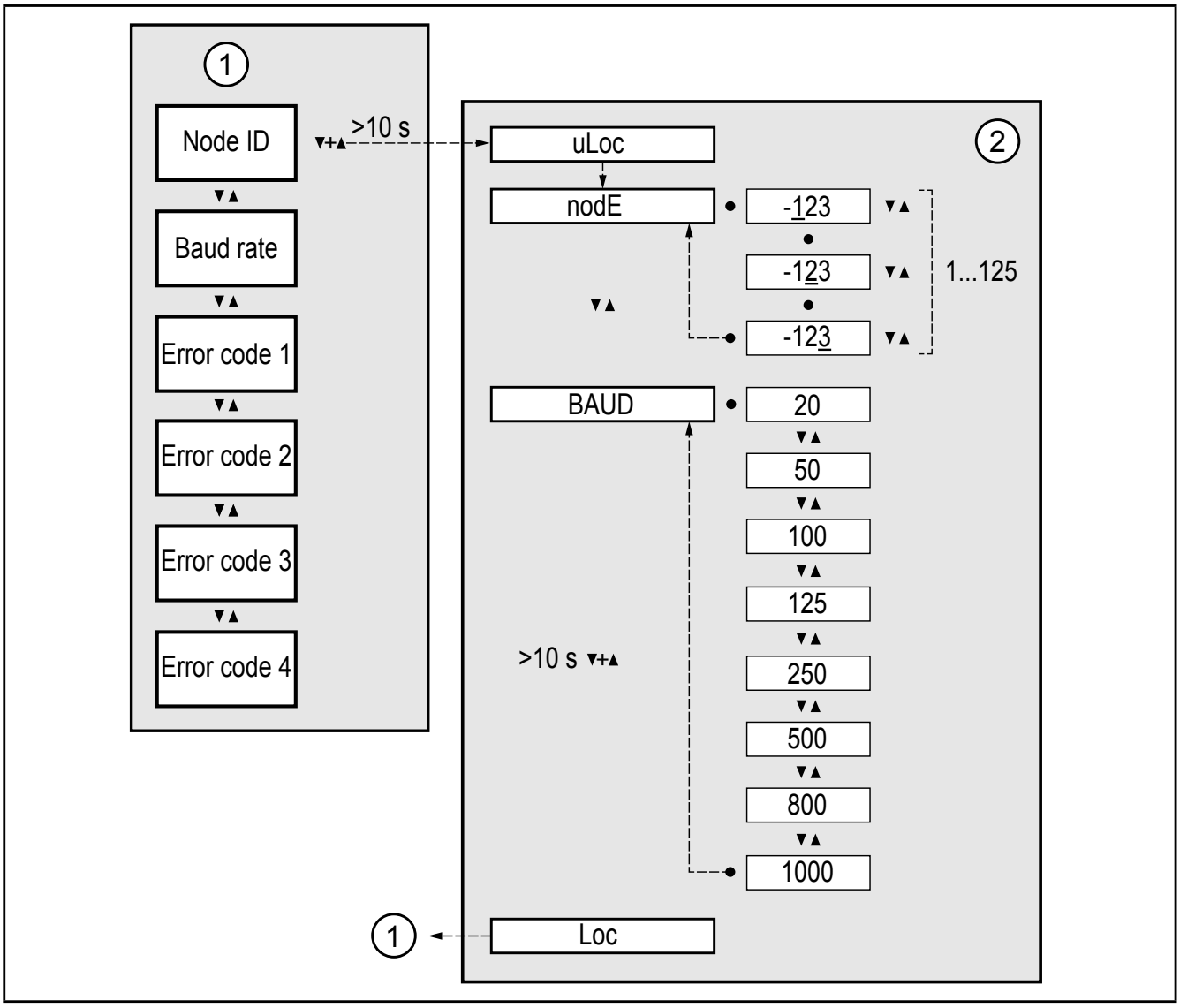

1: 显示模式(→ 8.1.1)

2: 编辑模式(→ 8.1.2)

参数列表： (→ 8.1.3)

7.2 输入/输出的状态表示（I/O LED，黄色）

I/O 配置 （请参见随附的对象目录）	状态 LED	ËµÃ÷
0（未使用）	熄灭	
1（数字输入 BL）	熄灭	输入信号 FALSE
	亮起	输入信号 TRUE
2（数字输出 BH）	熄灭	输出信号 FALSE
	亮起	输出信号 TRUE
3（电压输入 10 V）	熄灭	
4（PWM 输出）	熄灭	PWM 值 = 0‰
	亮起	PWM 值 = 0‰
5（电流控制输出）	熄灭	电流值 ≤ 70 mA
	亮起	电流值 > 70 mA
6（电压输入 32 V，比率计）	熄灭	
7（电流输入 20 mA）	熄灭	
	2 Hz	输入端故障
9（电压输入 32 V）	熄灭	
10（数字输入 BL）	熄灭	输入信号 FALSE
	亮起	输入信号 TRUE
11（数字输入 BL，带有诊断）	熄灭	输入信号 FALSE
	亮起	输入信号 TRUE
	2 Hz	输入端故障
12（数字输入 BH）	熄灭	输入信号 FALSE
	亮起	输入信号 TRUE
14（频率输入）	熄灭	
	2 Hz	输入端故障
15（数字输出 BH，带有诊断）	熄灭	输出信号 FALSE
	亮起	输出信号 TRUE
	2 Hz	输出端故障
16（数字输出 BH，带有诊断， 短路及过载保护）	熄灭	输出信号 FALSE
	亮起	输出信号 TRUE
	2 Hz	输出端故障
18（电阻器输入）	熄灭	
	2 Hz	输入端故障
20（间隔测量）	熄灭	
	2 Hz	输入端故障

CN

8 设定

8.1 I/O 模块

交付时，装置配置为 I/O 模块。

开启电源后，10 段显示屏会显示装置的产品编号，随后显示节点 ID。

8.1.1 显示模式

如果绿色锁定 LED 亮起，装置处于显示模式。 装置仅可指示设定节点 ID、波特率，并在适用时 错误信息; 显示无法编辑的参数。

► 按 DOWN 按钮。

> 装置显示设定波特率。

► 按 DOWN 按钮。

> 如有适用，装置将显示故障代码 1。

► 再按一次 DOWN 按钮。

> 每次按下 DOWN 按钮，如适用，装置会显示另一故障代码。

► 使用 UP 按钮返回。

最多可发生并显示 4 种不同故障代码：

错误代码	描述
UBB2	无电源电压
SH	对 GND 短路
OP	断路
LF	频率输入，频率太低
oC	输入电流，电流太高
oL	过电流
IP	参数设定不正确
Comm	通信错误
HrTB	Heart beat 错误
mEmr	内存错误
SYnC	同步错误

如果 10 秒内没有使用按钮，装置会显示设定节点 ID。

8.1.2 参数设定

► 同时按下 UP 和 DOWN 按钮至少 10 秒，可更改为编辑模式。

> 绿色锁定 LED 熄灭。

> 参数可以编辑。

> "uLoc" 显示 5 秒

> 显示 "nodE"
► 按 ENTER 按钮。
> 装置显示设定节点 ID。
> 待编辑的首位闪烁。
► 使用 UP 和 DOWN 按钮设定所需的数值。
► 使用 ENTER 按钮前进到下一位。
> 待编辑的第 2 位闪烁。
► 使用 UP 和 DOWN 按钮设定所需的数值。
► 使用 ENTER 按钮前进到下一位。
> 待编辑的第 3 位闪烁。
► 使用 UP 和 DOWN 按钮设定所需的数值。
► 按 ENTER 按钮。
> 设定节点 ID 已确认。
> 显示 "nodE"
► 按 DOWN 按钮。
> 显示 "BAUD"。
► 按 ENTER 按钮。
> 装置显示设定波特率。
► 使用 UP 和 DOWN 按钮设定所需的数值。
► 按 ENTER 按钮。
> 设定波特率已确认。



参数更改须在装置重启后方会应用。

退出编辑模式：

► 同时按住 UP 和 DOWN 至少 10 秒。
> 绿色锁定 LED 亮起。
> 显示无法编辑的参数。
> "Loc" 显示 5 秒，随后显示设定节点 ID



如果 30 秒内没有使用按钮，装置会自动结束编辑模式。

CN

8.1.3 参数列表

参数	功能	值范围	默认值
nodE	装置节点 ID	1...125	125
BAUD	波特率	20, 50, 100, 125, 250, 500, 800, 1000 kbit/s	250 kbit/s

8.2 控制器

装置可配置为控制器。 现有菜单结构和 I/O 模块属性将丢失。

8.2.1 编程

用户可通过符合 IEC 61131-3 的编程系统 CODESYS 2.3 来轻松创建应用程序软件。

用户应对其自行创建的应用程序的安全功能负责。 如有必要，必须请相应的监管和测试机构，按照国家法规额外执行批准程序。

如果需要用作 CANopen 装置时设定 CAN ID 与波特率的说明，请参阅系统手册。

8.3 所需文档

除 CODESYS V2.3 编程系统外，需要以下文档来执行装置的编程和设定：

- 编程手册 CODESYS V2.3
- 系统手册 ioControl

手册可从互联网下载。www.ifm.com

8.4 所需硬件

如果用作移动控制器，需要用于连接至电脑或笔记本的 CAN 接口，以将应用程序加载至装置。

示例：

- CAN/RS232 USB 接口 CANfox (EC2112)
- 适用于 CANfox 的适配器电缆 (EC1213)

您可在以下位置找到有关可用附件的更多信息：www.ifm.com

9 技术资料

9.1 CR2040

CR2040

I/O 模块
数字和模拟
适用于R360系统
CANopen设备

移动控制器
编程标准：IEC 61131-3

16路输入，2路CAN总线接口

8...32 V DC

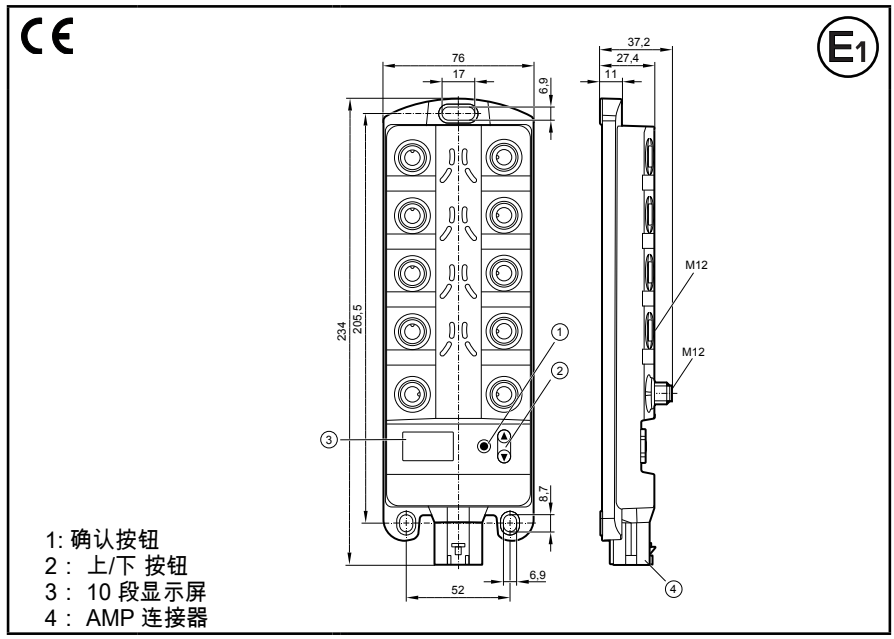

1: 确认按钮
2： 上/下 按钮
3： 10 段显示屏
4： AMP 连接器

输入电阻	模块控制系统\可用作 CANopen 设备或智能I/O模块
机械数据	
外壳	外壳： PA6/6.6 显示: PA 按钮： 硅
尺寸（高 x 宽 x 深）	234 x 76 x 37 mm（不含空心铆钉）
安装	通过符合 DIN EN ISO 4762 或 DIN 7984 标准的 3 个 M5 螺丝、符合 DIN 7340 的 3 个空芯铆钉以及符合 DIN 7092 标准的 3 个垫圈来固定（已随附空心铆钉和垫圈）
连接	电源供应器: MCP2.8 6 针，用于 TE-AMP 1745078-1 连接器 输入/输出： M12，5 针 触点： AMP: CuFe 镀锡； M12: CuZn (镀金)
输入 CAN1 接口 工作电压，CAN2	8 x 5 针 2 x 5 针 1 x 6 针
防护等级	IP 65 和 IP 67（所有连接器都安装）
工作/贮藏温度	-40...85° C / -40...85° C
最大允许相对湿度	90%，无冷凝
最高海拔	2000 m
污染等级	2
重量	450 g
电气参数	
工作电压	8...32 V DC
耗电量	105 mA（于 24 V DC）/ 188 mA（于 12 V DC）/最大 300 mA
过电压、电压过低检测 电压过低关闭	36V，t ≤ 10 s UB ≤ 7.8 V时 UB < 7V 时
处理器	飞思卡尔 PowerPC，50 MHz
内存（总计）	592 kbytes RAM / 1536 kbytes 闪存 / 1 kbyte FRAM
内存分配	编程手册 ioControl 和 www.ifm.com

CN

CR2040	技术资料
设备监控	电压过低监控 电子狗功能 程序和系统的校验和测试 过温监控
CAN 接口 1 和 2 波特率 通信协议	CAN 接口 2.0 A/B，ISO 11898 20 Kbit/s...1 Mbit/s（默认 CAN1： 250 kBit/s，CAN2： 250 kBit/s） CANopen，CiA DS 301 V4，CiA DS 401 V1.4 或 SAE J 1939 或自由协议
软件/编程	
编程系统	CODESYS V2.3(IEC 61131-3)
输入	16（可配置）
配置	

数目	设计	
8	开关量，适用于正/负极性传感器信号 模拟量（0...10/32 V DC，0...20 mA，比率计）	BL/BH A
4	开关量，适用于正极性传感器信号 电阻测量 (0.016...30 kΩ)	BL R
4	开关量，适用于正极性传感器信号 开关量，适用于负极性传感器信号*， 频率信号（≤30kHz）	BL BH FRQ

*是指作为I/O模块（CANopen设备）使用时不可用

指示灯	
I/O LED	16 x 橙色 LED （默认设定： 相应输入的状态指示
电源 LED (PWR)	LED 绿色 (默认设定: 指示系统状态）
模式 LED (M)	LED 绿色 (默认设定: 表示节点 ID 已显示）
应用 LED (A...D)	4 x 绿色 LED
锁定 LED（锁形符号）	1 x 绿色 LED (默认设定: 设定参数的锁定）
诊断 LED (DIA)	1 x 红色 LED (默认设定: 错误指示）
显示	4 位 10 段显示屏（双色： 红色/绿色） (默认设定: 指示波特率或节点 ID）
作为移动控制器使用时的工作状态	

LED	状态	说明
–	常暗	无工作电压
PWR + DIA	1 x on	初始化或复位检查
PWR	5 Hz	未加载操作系统
	2 Hz	应用程序运行中 (RUN)
	永久亮起	应用程序已停止（停止）
DIA	10 Hz	应用程序已停止（停止，有错误）
	5 Hz	因电压过低，应用程序已停止
	常亮	系统错误（严重错误）

CR2040	技术资料
操作元件	
按钮	ENTER, UP, DOWN
按钮（默认设置）	CAN ID / 波特率设定
输入特性	

模拟量输入 (BL, BH, A)
IN00 - 连接 1, 针脚 2
IN01 - 连接 2, 针脚 2
IN02 - 连接 3, 针脚 2
IN03 - 连接 4, 针脚 2
IN04 - 连接 5, 针脚 2
IN05 - 连接 6, 针脚 2
IN06 - 连接 7, 针脚 2
IN07 - 连接 8, 针脚 2
可被配置为...

● 电压输入	
输入电压	0...10 V 或 0...32 V
分辨率	12 位
精度	± 1% FS
输入电阻	65.6 kΩ (0...10 V), 50.7 kΩ (0...32 V)
输入频率	≤ 500 Hz
● 电流输入，带诊断功能	
输入电流	0 … 20 mA
分辨率	12 位
精度	± 1% FS
输入电阻	400 Ω
输入频率	≤ 500 Hz
电流 > 23 mA 时，输入功能将切换至电压输入！	
● 电压输入，0...32 V，比率计	
功能	(UIN ÷ UB) x 1000 ‰
值范围	0...1000 ‰
输入电阻	50.7 kΩ
● 正极性传感器信号的开关量电压输入	
开启电平	> 0.7 UB
关闭电平	< 0.3 UB
输入电阻	3.2 kΩ
输入频率	50 Hz
诊断断路	> 0.95 UB
诊断短路	< 1 V
● 负极性传感器信号的开关量电压输入	
开启电平	> 0.7 UB
关闭电平	< 0.3 UB
输入电阻	3.2 kΩ
输入频率	50 Hz

开关量输入 (BL, R)
IN08 - 连接 1，针脚 4
IN10 - 连接 3，针脚 4
IN12 - 连接 5，针脚 4
IN14 - 连接 7，针脚 4
可被配置为...

● 正极性传感器信号的开关量电压输入	
开启电平	> 0.7 UB
关闭电平	< 0.3 UB
输入电阻	3.2 kΩ
输入频率	50 Hz
诊断断路	> 0.95 UB
诊断短路	< 1 V
● 电阻输入	
测量范围	0.016…30 kΩ
精度	± 2% FS: 16 Ω...3 kΩ ± 5 % FS: 3...15 kΩ ± 10 % FS: 15...30 kΩ

CN

CR2040	技术资料

频率输入 (BL, BH, FRQ)
IN09 - 连接 2，针脚 4
IN11 - 连接 4，针脚 4
IN13 - 连接 6，针脚 4
IN15 - 连接 8，针脚 4
可被配置为...

● 频率输入	
输入电阻	3.2 kΩ
输入频率	≤ 30 kHz
开启电平	> 0.7 UB
关闭电平	< 0.3 UB
● 正极性传感器信号的开关量电压输入	
开启电平	> 0.7 UB
关闭电平	< 0.3 UB
输入电阻	3.2 kΩ
输入频率	50 Hz
诊断断路*	> 0.95 UB
诊断短路*	< 1 V
● 负极性传感器信号的开关量电压输入*	
开启电平	> 0.7 UB
关闭电平	< 0.3 UB
输入电阻	3.2 kΩ
输入频率	50 Hz

*表示作为I/O模块使用（Canopen 从站）时不可用

CAN 供电 + 传感器电源 VCAN + VBBS 最大总电流: 1.5 A

CR2040	技术资料	
测试标准和法规		
CE 标志	EN 61000-6-2	电磁兼容性 (EMC) 抗噪性
	EN 61000-6-4	电磁兼容性 (EMC) 辐射干扰
E1 标记	UN/ECE-R10	辐射干扰 100 V/m 抗扰
	ISO 7637-2	脉冲 1，严重级别：IV； 功能状态 C 脉冲 2a，严重级别：IV； 功能状态 A 脉冲 2b，严重级别：IV； 功能状态 C 脉冲 3a，严重级别：IV； 功能状态 A 脉冲 3b，严重级别：IV； 功能状态 A 脉冲 4，严重级别：IV； 功能状态 B 脉冲 5，严重级别：III； 功能状态 C (对于 24V 系统，数据有效) 脉冲 4，严重级别：III； 功能状态 C （对于 12V 系统，数据有效）
气候试验	EN 60068-2-30	湿热，循环 上限温度 55°C，循环数： 6
	EN 60068-2-78	湿热，稳态 测试温度 40°C/93% 相对湿度， 测试时长： 21 天
机械测试	ISO 16750-3	测试 VII； 振动，随机 安装位置： 车身
	EN 60068-2-6	振动，正弦 10...500 Hz; 0.72 mm/10 g; 10 个循环/轴
	ISO 16750-3	撞击 30 g/6 ms; 24,000 次冲击
耐化学性	ISO 16750-5	AA, BA, BD, CC, DB, DC, DD, 一次仅允许一种化学品
备注	欧盟合规性声明和认证可在以下位置找到：www.ifm.com	

CR2040

技术资料

配线

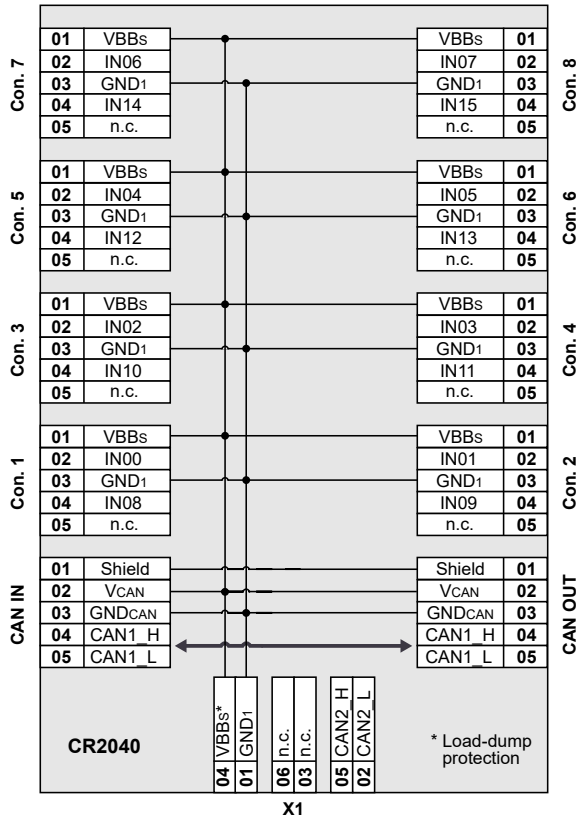

M12插座，5个插针，A-译码 **(Con. 1...8, CAN OUT)**



M12接插件，5个插针，A-译码 **(CAN IN)**



AMP插头 **(X1)**

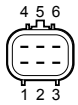

CR2040	技术资料

LED 分配

1: LED IN07
2: LED IN15
3: LED IN05
4: LED IN13
5: LED IN03
6: LED IN11
7: LED IN01
8: LED IN09
9: LED IN08
10: LED IN00
11: LED IN10
12: LED IN02
13: LED IN12
14: LED IN04
15: LED IN14
16: LED IN06

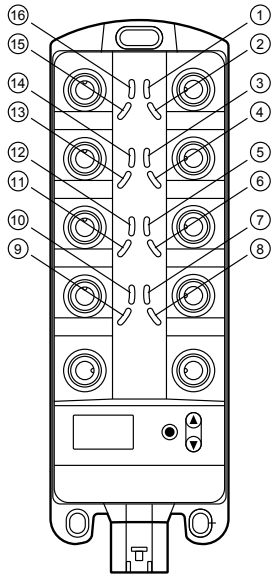

缩写

A	模拟
BH	二进制高侧
BL	二进制低侧
FRQ	频率/脉冲 输入
R	电阻输入
VBBS	传感器/模块电源
VCAN	CAN 连接器电源

CN

9.2 CR2041

CR2041

I/O模块
数字和模拟
适用于R360系统
CANopen设备

移动控制器
编程标准IEC 61131-3

16路输入，2路CAN总线接口

8...32 V DC

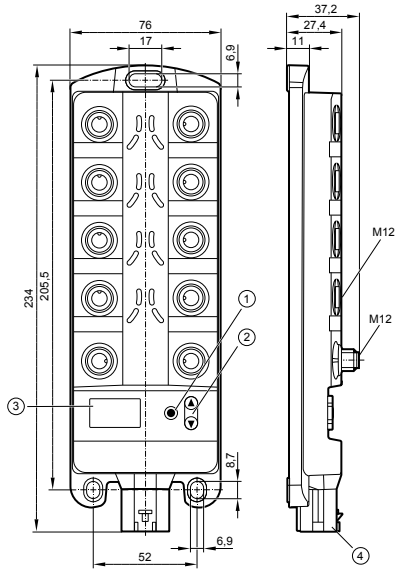

1: 确认按钮
2： 上/下按钮
3： 10 段显示屏
4： AMP 连接器

技术资料	模块控制系统\可用作 CANopen 设备或智能I/O模块
机械数据	
外壳	外壳： PA6/6.6 显示: PA 按钮： 硅
尺寸（高 x 宽 x 深）	234 x 76 x 37 mm（不含空心铆钉）
安装	通过符合 DIN EN ISO 4762 或 DIN 7984 标准的 3 个 M5 螺丝、符合 DIN 7340 的 3 个空芯铆钉以及符合 DIN 7092 标准的 3 个垫圈来固定（已随附空心铆钉和垫圈）
连接	电源供应器: MCP2.8 6 针，用于 TE-AMP 1745078-1 连接器 输入/输出： M12，5 针 触点： AMP: CuFe 镀锡； M12: CuZn (镀金)
输出 CAN1 接口 工作电压，CAN2	8 x 5 针 2 x 5 针 1 x 6 针
防护等级	IP 65 和 IP 67（所有连接器都安装）
工作/贮藏温度	-40...85° C / -40...85° C
最大允许相对湿度	90%，无冷凝
最高海拔	2000 m
污染等级	2
重量	450 g
电气参数	
工作电压	8...32 V DC
耗电量	105 mA（于 24 V DC）/ 188 mA（于 12 V DC）/最大 300 mA
过电压、电压过低检测 电压过低关闭	36V，t ≤ 10 s UB ≤ 7.8 V时 UB < 7V 时
处理器	飞思卡尔 PowerPC，50 MHz
内存（总计）	592 kbytes RAM / 1536 kbytes 闪存 / 1 kbyte FRAM
内存分配	编程手册 ioControl 和 www.ifm.com

CR2041	技术资料
设备监控	电压过低监控 电子狗功能 程序和系统的校验和测试 过温监控
CAN 接口 1 和 2 波特率 通信协议	CAN 接口 2.0 A/B，ISO 11898 20 Kbit/s...1 Mbit/s（默认 CAN1： 250 kbit/s, CAN2: 250 kbit/s) CANopen，CiA DS 301 V4，CiA DS 401 V1.4 或 SAE J 1939 或自由协议
软件/编程	
编程系统	CODESYS V2.3(IEC 61131-3)
输出	16（可配置）
配置	

数目	设计	
4	正极性开关（高电平），4 A，诊断 PWM 输出 (20...250 Hz)，4 A，诊断 电流控制 0.02...4 A	BH PWM PWMI
4	正极性开关（高电平），2.5 A，诊断 PWM 输出 (20...250 Hz)，2.5 A，诊断 电流控制 0.02 A	BH PWM PWMI
4	正极性开关（高电平），4 A，诊断 PWM 输出 (20...250 Hz)，4 A	BH PWM
4	正极性开关（高电平），2.5 A，诊断 PWM 输出 (20...250 Hz)，2.5 A	BH PWM

指示灯	
I/O LED	16 x 橙色 LED （默认设定: 相应输出的状态指示
电源 LED (PWR)	LED 绿色 (默认设定: 指示系统状态）
模式 LED (M)	LED 绿色 (默认设定: 表示节点 ID 已显示）
应用 LED (A...D)	4 x 绿色 LED
锁定 LED（锁形符号）	1 x 绿色 LED (默认设定: 设定参数的锁定）
诊断 LED (DIA)	1 x 红色 LED (默认设定: 错误指示）
显示	4 位 10 段显示屏（双色： 红色/绿色） (默认设定: 指示波特率或节点 ID）
作为移动控制器使用时的工作状态	

LED	状态	说明
–	常暗	无工作电压
PWR + DIA	1 x on	初始化或复位检查
PWR	5 Hz	未加载任何操作系统
	2 Hz	应用程序运行中 (RUN)
	常亮	应用程序已停止（停止）
DIA	10 Hz	应用程序已停止（停止，有错误）
	5 Hz	因电压过低，应用程序已停止
	永久亮起	系统错误（严重错误）

CR2041	技术资料
操作元件	
按钮	ENTER, UP, DOWN
按钮（默认设置）	CAN ID / 波特率设定
输出特性	

开关量输出 (BH, PWM, PWMI)
OUT00 - 连接 1，插脚 4
OUT01 - 连接 2，插脚 4
OUT02 - 连接 3，插脚 4
OUT03 - 连接 4，插脚 4
可被配置为...

● 半导体输出，正极性输出（高电平侧），防短路和过载保护. 通过电流反馈诊断（断线 / 过载). 通过电压反馈诊断，可以解除上拉电阻（断线 / 短路）。	
开关电压	8...32 V
开关电流	0.02...4 A
负载电阻	≥ 3 Ω（12 V DC 时） ≥ 6 Ω（24 V DC 时）
当前测量范围	0.02...6 A
● PWM 输出	
输出频率	20...250 Hz
脉冲/占空比	1...1000 ‰
开关电流	0.02...4 A
当前测量范围	0.02...6 A
● 电流控制输出	
输出频率	20...250 Hz
控制范围	0.02...4 A
设定分辨率	1 mA
最大浪涌电流	≤ 24 A

开关量输出（BH,PWM,PWMI）
OUT04-连接5，针脚 4
OUT05-连接6，针脚 4
OUT06-连接7，针脚 4
OUT07-连接8，针脚 4
可配置为：

● 半导体输出，正极性输出（高电平侧），防短路和过载保护. 通过电流反馈诊断（断线 / 过载). 通过电压反馈诊断，可以解除上拉电阻（断线 / 短路）。	
开关电压	8...32 V
开关电流	0.02...2.5 A
负载电阻器	≥ 4.8 Ω (12 V DC) ≥ 9.6 Ω (24 V DC)
当前测量范围	0.02...4 A
● PWM 输出	
输出频率	20...250 Hz
脉冲/占空比	1...1000 ‰
开关电流	0.02...2.5 A
当前测量范围	0.02...4 A
● 电流控制输出	
输出频率	20...250 Hz
控制范围	0.02...2.5 A
设定分辨率	1 mA
最大浪涌电流	≤ 24 A

CR2041	技术资料

开关量输出（BH,PWM）
OUT08-连接1，针脚 2
OUT09-连接2，针脚 2
OUT10-连接3，针脚 2
OUT11-连接4，针脚 2
可配置为：

● 半导体输出，正极性输出（高电平侧），防短路和过载保护. 通过电压反馈诊断，可以解除上拉电阻（断路 / 短路）。	
开关电压	8...32 V
开关电流	0.02...2.5 A
● PWM 输出	
输出频率	20...250 Hz
脉冲/占空比	1...1000 ‰
开关电流	0.02...2.5 A
最大浪涌电流	≤ 24 A

开关量输出（BH,PWM）
OUT12-连接5，针脚 2
OUT13-连接6，针脚 2
OUT14-连接7，针脚 2
OUT15-连接8，针脚 2
可配置为：

● 半导体输出，正极性输出（高电平侧），防短路和过载保护. 通过电压反馈诊断，可以解除上拉电阻（断线 / 短路）。	
开关电压	8...32 V
开关电流	0.02...4 A
● PWM 输出	
输出频率	20...250 Hz
脉冲/占空比	1...1000 ‰
开关电流	0.02...4 A
最大浪涌电流	≤ 24 A

续流二极管	集成有抑制感性负载的续流二极管
过载保护 （对于所有输出功能有效）	≤ 5 分钟（100% 过载时）
短路保护 （对于所有输入和输出功能有效）	≤ 5 分钟
VCAN的最大总电流	1.5 A
输出连接器每个 GND 、（pin 3）最大总电流	4.0 A
输出电源 VBB1 / VBB2 的最大总电流	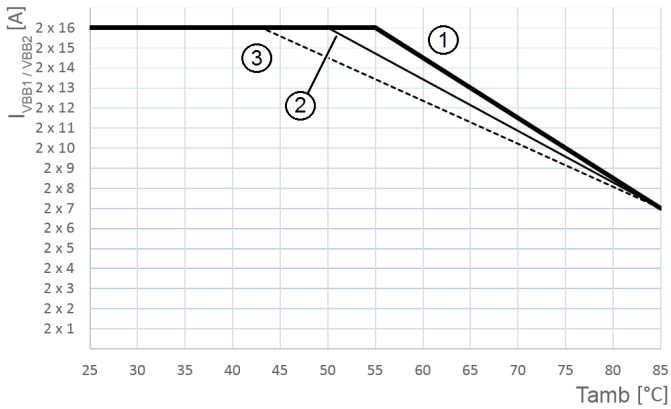 1: 安装在车辆外部（有外部对流） 2: 安装在控制柜内的金属板上 3: 安装在导热系数低的表面上（如塑料或木材）

CN

CR2041	技术资料	
M12 连接器每个插脚的最大电流负载（连续电流负载）	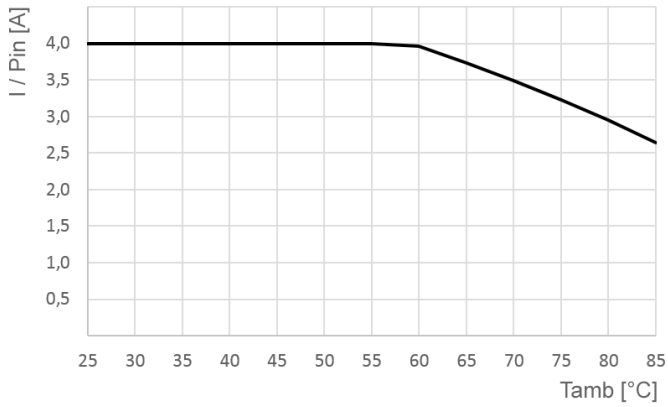	
测试标准和法规		
CE 标志	EN 61000-6-2	电磁兼容性 (EMC) 抗噪性
	EN 61000-6-4	电磁兼容性 (EMC) 辐射干扰
E1 标记	UN/ECE-R10	辐射干扰 100 V/m 抗扰
	ISO 7637-2	脉冲 1，严重级别：IV； 功能状态 C 脉冲 2a，严重级别：IV； 功能状态 A 脉冲 2b，严重级别：IV； 功能状态 C 脉冲 3a，严重级别：IV； 功能状态 A 脉冲 3b，严重级别：IV； 功能状态 A 脉冲 4，严重级别：IV； 功能状态 B 脉冲 5，严重级别：III； 功能状态 C (对于 24V 系统，数据有效) 脉冲 4，严重级别：III； 功能状态 C （对于 12V 系统，数据有效）
气候试验	EN 60068-2-30	湿热，循环 上限温度 55°C，循环数： 6
	EN 60068-2-78	湿热，稳态 测试温度 40°C/93% 相对湿度， 测试时长： 21 天
机械测试	ISO 16750-3	测试 VII； 振动，随机 安装位置： 车身
	EN 60068-2-6	振动，正弦 10...500 Hz; 0.72 mm/10 g; 10 个循环/轴
	ISO 16750-3	撞击 30 g/6 ms; 24,000 次冲击
耐化学性	ISO 16750-5	AA, BA, BD, CC, DB, DC, DD, 一次仅允许一种化学品
备注	欧盟合规性声明和认证可在以下位置找到：www.ifm.com	

CR2041

技术资料

配线

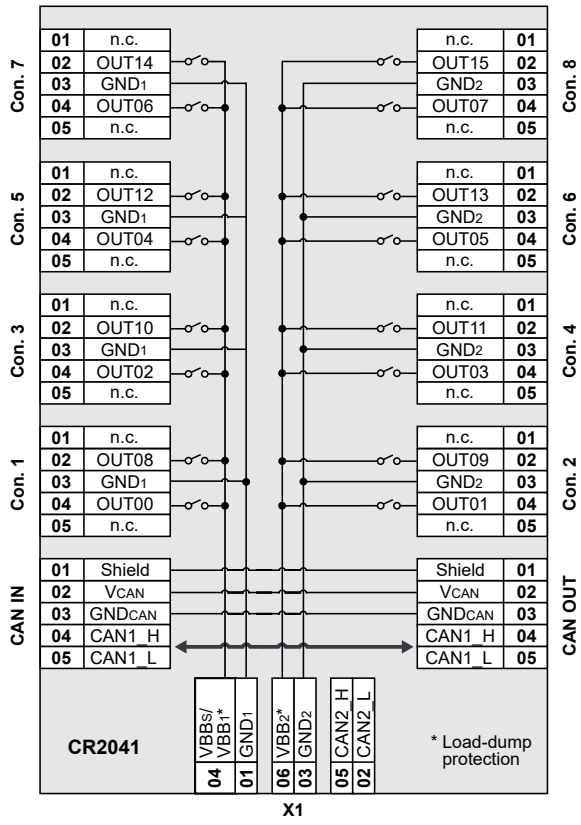

M12插座，5个插针，A-译码 **(Con. 1...8, CAN OUT)**



M12接插件，5个插针，A-译码 **(CAN IN)**



AMP插头 **(X1)**

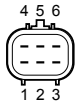

CN

CR2041	技术资料

LED 分配

1: LED OUT15
2: LED OUT07
3: LED OUT13
4: LED OUT05
5: LED OUT11
6: LED OUT03
7: LED OUT09
8: LED OUT01
9: LED OUT00
10: LED OUT08
11: LED OUT02
12: LED OUT10
13: LED OUT04
14: LED OUT12
15: LED OUT06
16: LED OUT14

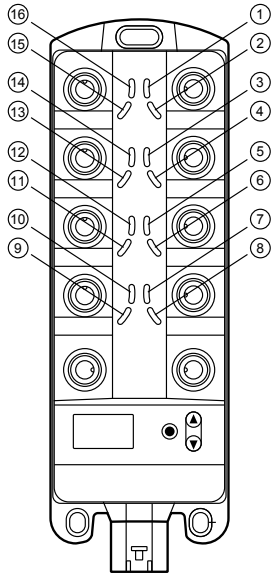

缩写

BH	二进制高侧
BL	开关量低电平侧
PWM	脉冲宽度调制
PWMI	脉冲宽度调制，电流控制
VBBS	电源传感器/模块
VBB1	OUT00, OUT02, OUT04, OUT06, OUT08, OUT10, OUT12, OUT14 电源
VBB2	OUT01, OUT03, OUT05, OUT07, OUT09, OUT11, OUT13, OUT15 电源
VCAN	CAN 连接器电源

9.3 CR2042

CR2042

输入/输出模块
数字和模拟
适用于R360系统
CANopen设备

移动控制器
IEC 61131-3
编程

8 个输入
8 个输出
2 个 CAN 接口

8...32 V DC

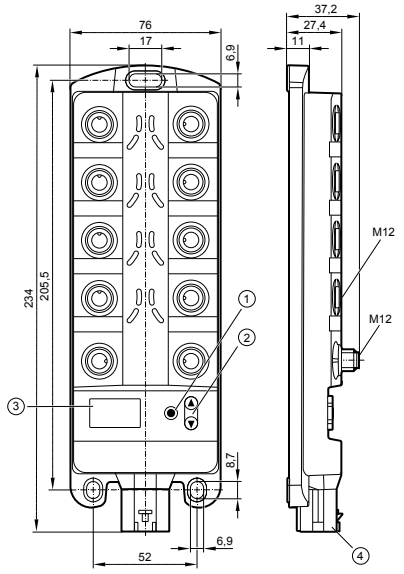

1: ENTER 按钮
2： UP/DOWN 按钮
3： 10 段显示屏
4： AMP 连接器

技术资料	模块控制系统\可用作 CANopen 装置或智能输入/输出模块
机械数据	
外壳	外壳： PA6/6.6 显示: PA 按钮： 硅
尺寸（高 x 宽 x 深）	234 x 76 x 37 mm（不含空心铆钉）
安装	通过符合 DIN EN ISO 4762 或 DIN 7984 标准的 3 个 M5 螺丝、符合 DIN 7340 的 3 个空芯铆钉以及符合 DIN 7092 标准的 3 个垫圈来固定（已随附空心铆钉和垫圈）
连接	电源供应器: MCP2.8 6 针，用于 TE-AMP 1745078-1 连接器 输入/输出： M12，5 针 触点： AMP: CuFe 镀锡； M12: CuZn (镀金)
输入 输出 CAN1 接口 工作电压，CAN2	4 x 5 针 4 x 5 针 2 x 5 针 1 x 6 针
防护等级	IP 65 和 IP 67（所有连接器都安装）
工作/贮藏温度	-40...85° C / -40...85° C
最大允许相对湿度	90%，无冷凝
最高海拔	2000 m
污染程度	2
重量	450 g
电气数据	
工作电压	8...32 V DC
耗电量	105 mA（于 24 V DC）/ 188 mA（于 12 V DC）/最大 300 mA
过电压、电压过低检测 电压过低关闭	36V，t ≤ 10 s UB ≤ 7.8 V时 UB < 7V 时
处理器	飞思卡尔 PowerPC，50 MHz
内存（总计）	592 kbytes RAM / 1536 kbytes 闪存 / 1 kbyte FRAM
内存分配	编程手册 ioControl 和 www.ifm.com

CN

CR2042	技术资料
装置监控	电压过低监控 电子狗功能 程序和系统的校验和测试 过温监控
CAN 接口 1 和 2 波特率 通信协议	CAN 接口 2.0 A/B，ISO 11898 20 Kbit/s...1 Mbit/s（默认 CAN1： 250 kbit/s, CAN2: 250 kbit/s) CANopen，CiA DS 301 版本 4，CiA DS 401 版本 1.4 或 SAE J 1939 或自由协议
软件/编程	
编程系统	CODESYS 2.3 版本 (IEC 61131-3)
输入	8（可配置）
配置	

数目	设计	
4	数字，适用于正/负极性传感器信号 模拟（0...10/32 V DC，0..20 mA，比率计） 频率 (≤ 30 kHz)	BL/BH A FRQ
4	数字，适用于正极性传感器信号 电阻测量 (0.016...30 kΩ)	BL R

输出	8（可配置）
配置	

数目	设计	
4	正极性开关（高电平），4 A，诊断 PWM 输出 (20...250 Hz)，4 A，诊断 电流控制 0.02...4 A	BH PWM PWMI
4	正极性开关（高电平），2.5 A，诊断 PWM 输出 (20...250 Hz)，2.5 A，诊断 电流控制 0.02 A	BH PWM PWMI

指示灯	
I/O LED	16 x 橙色 LED （默认设定： 对应输入/输出的状态指示）
电源 LED (PWR)	LED 绿色 (默认设定: 指示系统状态）
模式 LED (M)	LED 绿色 (默认设定: 表示节点 ID 已显示）
应用 LED (A...D)	4 x 绿色 LED
锁定 LED（锁形符号）	1 x 绿色 LED (默认设定: 设定参数的锁定）
诊断 LED (DIA)	1 x 红色 LED (默认设定: 错误诊断）
显示	4 位 10 段显示屏（双色： 红色/绿色） (默认设定: 指示波特率或节点 ID）

CR2042	技术资料

作为移动控制器使用时为工作状态

LED	状态	ËµÃ÷
–	永久关闭	无工作电压
PWR + DIA	1 x 开启	初始化或复位检查
PWR	5 Hz	未加载任何操作系统
	2 Hz	应用程序运行中 (RUN)
	永久亮起	应用程序已停止（停止）
DIA	10 Hz	应用程序已停止（停止，但有错误）
	5 Hz	因电压过低，应用程序已停止
	永久亮起	系统错误（严重错误）

操作元件

按钮 ENTER, UP, DOWN

按钮（默认设置） CAN ID / 波特率设定

输入特性

模拟量输入 (BL, BH, A, FRQ)
IN00 - 连接 1，插脚 2
IN01 - 连接 3，插脚 2
IN02 - 连接 5，插脚 2
IN03 - 连接 7，插脚 2
可被配置为...

● 电压输入	
输入电压	0...10 V 或 0...32 V
分辨率	12 位
精度	± 1% FS
输入电阻	65.6 kΩ (0...10 V), 50.7 kΩ (0...32 V)
输入频率	≤ 500 Hz
● 电流输入，带有诊断功能	
输入电流	0 … 20 mA
分辨率	12 位
精度	± 1% FS
输入电阻	400 Ω
输入频率	≤ 500 Hz
电流 > 23 mA 时，输入功能将切换至电压输入！	
● 电压输入，0...32 V，比率计	
功能	(UIN ÷ UB) x 1000 ‰
值范围	0...1000 ‰
输入电阻	50.7 kΩ
● 正极性传感器信号的开关量电压输入	
开启电平	> 0.7 UB
关闭电平	< 0.3 UB
输入电阻	3.2 kΩ
输入频率	50 Hz
诊断断路	> 0.95 UB
诊断短路	< 1 V
● 负极性传感器信号的开关量电压输入	
开启电平	> 0.7 UB
关闭电平	< 0.3 UB
输入电阻	3.2 kΩ
输入频率	50 Hz
● 频率输入	
输入电阻	3.2 kΩ
输入频率	≤ 30 kHz
开启电平	> 0.7 UB
关闭电平	< 0.3 UB

CN

CR2042	技术资料

开关量输入 (BL, R)
IN04 - 连接 1，插脚 4
IN05 - 连接 3，插脚 4
IN06 - 连接 5，插脚 4
IN07 - 连接 7，插脚 4
可被配置为...

● 正极性传感器信号的开关量电压输入	
开启电平	> 0.7 UB
关闭电平	< 0.3 UB
输入电阻	3.2 kΩ
输入频率	50 Hz
诊断断路	> 0.95 UB
诊断短路	< 1 V
● 电阻输入	
测量范围	0.016…30 kΩ
精度	± 2% FS: 16 Ω...3 kΩ ± 5 % FS: 3...15 kΩ ± 10 % FS: 15...30 kΩ

输出特性

开关量输出 (BH, PWM, PWMI)
OUT00 - 连接 2，插脚 4
OUT01 - 连接 4，插脚 4
OUT02 - 连接 6，插脚 4
OUT03 - 连接 8，插脚 4
可被配置为...

● 半导体输出，正极性输出（高电平侧），防短路和过载保护。通过电流反馈诊断（断线 / 过载）。通过电压反馈诊断，可以解除上拉电阻（断线 / 短路）。	
开关电压	8...32 V
开关电流	0.02...4 A
负载电阻器	≥ 3 Ω（12 V DC 时） ≥ 6 Ω（24 V DC 时）
当前测量范围	0.02...6 A
● PWM 输出	
输出频率	20...250 Hz
脉冲/占空比	1...1000 ‰
开关电流	0.02...4 A
当前测量范围	0.02...6 A
● 电流控制输出	
输出频率	20...250 Hz
控制范围	0.02...4 A
设定分辨率	1 mA
最大浪涌电流	≤ 24 A

模拟输入 (BH, PWM, PWMI)
OUT04 - 连接 2，插脚 2
OUT05 - 连接 4，插脚 2
OUT06 - 连接 6，插脚 2
OUT07 - 连接 8，插脚 2
可被配置为...

● 半导体输出，正极性输出（高电平侧），防短路和过载保护. 通过电流反馈诊断（断线 / 过载). 通过电压反馈诊断，可以解除上拉电阻（断线 / 短路）。	
开关电压	8...32 V
开关电流	0.02...2.5 A
负载电阻器	≥ 4.8 Ω (12 V DC) ≥ 9.6 Ω (24 V DC)
当前测量范围	0.02...4 A
● PWM 输出	
输出频率	20...250 Hz
脉冲/占空比	1...1000 ‰
开关电流	0.02...2.5 A
当前测量范围	0.02...4 A
● 电流控制输出	
输出频率	20...250 Hz
控制范围	0.02...2.5 A
设定分辨率	1 mA
最大浪涌电流	≤ 24 A

CR2042	技术资料
反向保护继流二极管	集成有钝化感性负载的续流二极管
过载保护 （对于所有输出功能有效）	≤ 5 分钟（100% 过载时）
短路保护 （对于所有输入和输出功能有效）	≤ 5 分钟
CAN 供电 + 传感器电源 VCAN + VBBS 最大总电流	1.5 A
输出连接器每个 GND 、（pin 3）最大总电流	4.0 A
输出电源 VBB2 的最大总电流	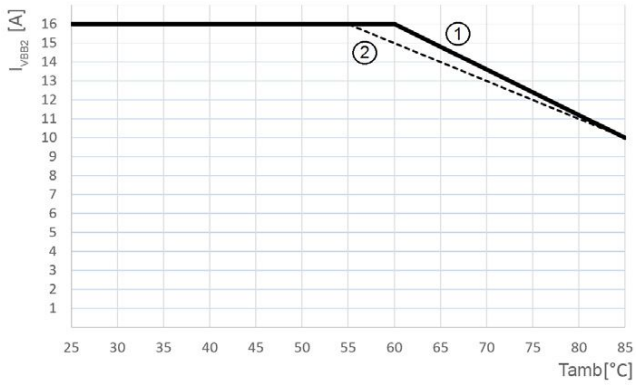 1: 安装在车辆外部（有外部对流） 2: 安装于控制柜内金属板上或导热系数低的表面（如塑料或木材）上
M12 连接器每个插脚的最大电流负载（连续电流负载）	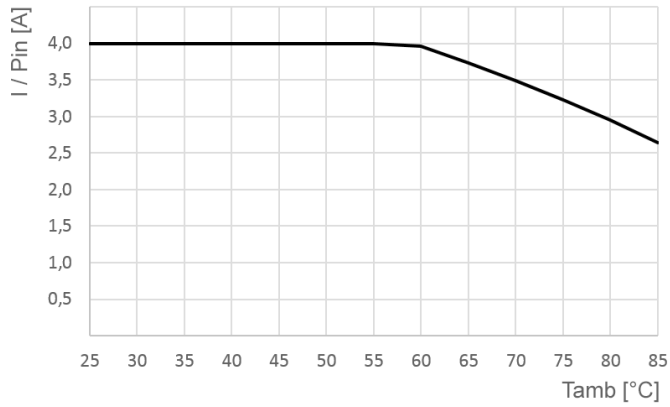

CN

CR2042	技术资料	
测试标准和法规		
CE 标志	EN 61000-6-2	电磁兼容性 (EMC) 抗噪性
	EN 61000-6-4	电磁兼容性 (EMC) 辐射干扰
E1 标记	UN/ECE-R10	辐射干扰 100 V/m 抗扰
	ISO 7637-2	脉冲 1，严重级别：IV； 功能状态 C 脉冲 2a，严重级别：IV； 功能状态 A 脉冲 2b，严重级别：IV； 功能状态 C 脉冲 3a，严重级别：IV； 功能状态 A 脉冲 3b，严重级别：IV； 功能状态 A 脉冲 4，严重级别：IV； 功能状态 B 脉冲 5，严重级别：III； 功能状态 C (对于 24V 系统，数据有效) 脉冲 4，严重级别：III； 功能状态 C （对于 12V 系统，数据有效）
气候试验	EN 60068-2-30	湿热，循环 上限温度 55°C，循环数： 6
	EN 60068-2-78	湿热，稳态 测试温度 40°C/93% 相对湿度， 测试时长： 21 天
机械测试	ISO 16750-3	测试 VII； 振动，随机 安装位置： 车身
	EN 60068-2-6	振动，正弦 10...500 Hz; 0.72 mm/10 g; 10 个循环/轴
	ISO 16750-3	撞击 30 g/6 ms; 24,000 次冲击
耐化学性	ISO 16750-5	AA, BA, BD, CC, DB, DC, DD, 一次仅允许一种化学品
备注	欧盟合规性声明和认证可在以下位置找到：www.ifm.com	

CR2042

配线

技术资料

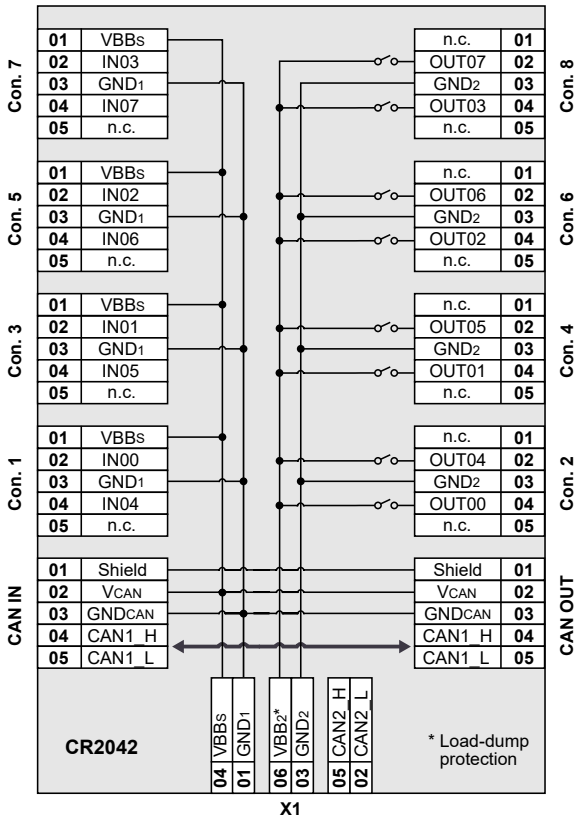

M12插座，5个插针，A-译码
(Con. 1...8, CAN OUT)



M12接插件，5个插针，A-译码
(CAN IN)



AMP插头
(X1)

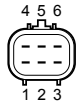

CN

CR2042	技术资料

LED 分配

1: LED OUT07
2: LED OUT03
3: LED OUT06
4: LED OUT02
5: LED OUT05
6: LED OUT01
7: LED OUT04
8: LED OUT00
9: LED IN04
10: LED IN00
11: LED IN05
12: LED IN01
13: LED IN06
14: LED IN02
15: LED IN07
16: LED IN03

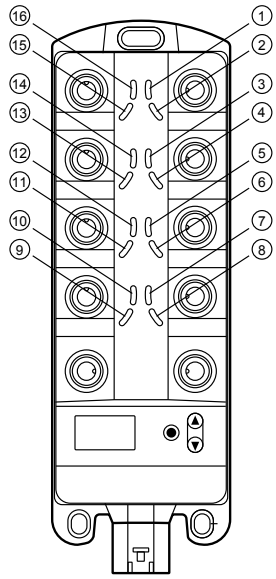

缩写

A	模拟量
R	电阻输入
FRQ	频率 / 脉冲输入
BH	开关量高电平侧
BL	开关量低电平侧
PWM	脉冲宽度调制
PWMI	脉冲宽度调制，电流控制
VBBS	电源传感器/模块
VBB2	供电 OUT01...OUT07
VCAN	供应 CAN 连接器

10 维护、修理及处理

装置无需维护.

► 请勿打开外壳，因为装置不含可由用户维护的任何组件。 仅可由制造商修理装置。

更换装置时，请注意污染程度(→ 9 技术资料)，直到通过连接器/堵头确保防护等级为止。 如有必要，请在更换前对装置 / 连接器进行清洁。 请检查连接器密封可重用性。 防护等级仅在密封完整时可以确保。

► 请使用干布清洁装置。

以下化学剂不适用清洁装置：溶解塑料的化学品，诸如异丙醇、甲基化酒精、汽油、稀释剂、乙醇、丙酮或氨水。

► 按照国家环保法规处理产品。

11 认证/标准

测试标准和法规(→ 9 技术资料)

欧盟合规性声明和认证可在以下位置找到：www.ifm.com

12 Appendix

12.1 EMCY Object

The following error codes according to DSP-401 or DSP-301 are supported:

EMCY code	Error reg	Additional code	Description
0x6100	0x11	0x00	"Internal Software Overflow of an Rx queue e.g. frequency of the RxP-DOs is too high. Reset only externally via entry in the indey 0x1003 SubIdx 00."
0x6101	0x11	0x00	"Internal Software Overflow of an Tx queue e.g. device does not communicate with the bus. Reset only externally via entry in the indey 0x1003 SubIdx 00."
0x8000	0x11	0x00	"Monitoring Sync Error For communication cycle no sync object is received. Only in Operational. Reset with the next sync OBJ or PREOP"
0x8100	0x11	0x00	Communication Err
0x8131	0x11	0x00	"Monitoring Heart Beat Error No guard object is received. Reset with the next Heart beat or PREOP"
0x63xx	0x01	0x00	"Invalid parameter of an input or output. ""xx"" means number of the IO-channel (00 … 15)"
0x5000	0x01	0x00	Memory Error
0x3308	0x05	0x00	VBB2 error (only CR2041, CR2042)
0x90xx	0x01	0x00	"Frequncy input, Frequency too low ""xx"" means number of the IO-channel (00 … 15)"
0x21xx	0x03	0x00	"Inputs, Openline ""xx"" means number of the IO-channel (00 … 15)"
0x21xx	0x03	0x00	"Inputs, Short circuit ""xx"" means number of the IO-channel CR2040 (00 … 15) + 16; CR2042 (00 … 07) + 8"
0x21xx	0x03	0x00	"Inputs, Overcurrent ""xx"" means number of the IO-channel CR2040 (00 … 15) + 32; CR2042 (00 … 07) + 16"
0x23xx	0x03	0x00	"outputs, Openline ""xx"" means number of the IO-channel CR2041 (00 … 15); CR2042 (00 … 07)"
0x23xx	0x03	0x00	"outputs, Short circuit ""xx"" means number of the IO-channel CR2041 (00 … 15) + 16; CR2042 (00 … 07) + 8"
0x23xx	0x03	0x00	"outputs, Overload ""xx"" means number of the IO-channel CR2041 (00 … 15) + 32; CR2042 (00 … 07) + 16"

CANopen does not provide for two identical EMCY objects to be sent consecutively.

12.2 Object directory CR204x

Obligatory objects (index 0x1000…0x1FFF):

Index	S-idx	Designation	Data type		Default	Details
0x1000		Device type	ro	UDINT	0x000F0191	Device type
0x1001		Error register	ro	USINT	0	Error register bitcoded to profile 301 Permissible values: 0b0000 0000 = no error 0b0000 0001 = generic error 0b0001 0000 = communication error 0b1000 0000 = manufacturer specific
0x1018	0x00	Device identification Number of entries	ro	USINT	0x04	Device identification
	0x01	Vendor-ID	ro	UDINT	0x0069666D	Vendor ID oft he device according to CiA specifikation
	0x02	Product code	ro	STRING	0	Product code of the device
	0x03	Revision number	ro	UDINT	0	Revision number of the device
	0x04	Serial number	ro	UDINT	0	Serial number of the device
0x1003	0x00	Predefined error field Number of entries	rw	UDINT	0	An error list with 4 entries is supported
	0x01	Error history	ro	UDINT	0	Error occured, coded according to EMCY list The last error is indicated in the sub-index 1
	0x02	Error history	ro	UDINT	0	Error occured, coded according to EMCY list
	0x03	Error history	ro	UDINT	0	Error occured, coded according to EMCY list
	0x04	Error history	ro	UDINT	0	Error occured, coded according to EMCY list
	0x05	Error history	ro	UDINT	0	Error occured, coded according to EMCY list

Index	S-idx	Designation	Data type		Default	Details
0x1005		COB-ID synch message	rw	UDINT	0x0000 0080	Identifier of the synch message Bit 30 = 0 → device generates no synch message Bit 30 = 1 → device generates a synch message Bit 29 = 0 → 11 bit ID Bit 29 = 1 → ID = 0x80 + node ID
0x1006		Communi-cation cycle period	rw	UDINT	0	Max. time between 2 synch objects in [µs] Control resolution = 1 ms
0x1008		Manufacturer device name	ro	STRING	CR204x	Device designation (CR2040 or CR2041 or CR2042)
0x1009		Manufacturer hardware version	ro	STRING	V00.00.00	Hardware version
0x100A		Manufacturer software version	ro	STRING	V00.00.00	Software version
0x1010	0x00	Store para-meters Largest sub-index supported	ro	USINT	0x01	Number of “save options”
	0x01	Save all parameters	rw	UDINT	2	Automatic saving of all parameters changed 0 = AutoSave OFF 2 = AutoSave ON
0x1011	0x00	Restore default parameters Largest sub-index supported	ro	USINT	0x01	Number of "restore options"
	0x01	Restore all default parameters	rw	UDINT	0x01	If the String "load" is entered here, the default parameters set at the factory are restored and become valid after the next reset.
0x1014		COBId Emergency	rw	UDINT	0x80 + node ID	Bit 31 = 0 → EMCY is valid Bit 31 = 1 → EMCY is not valid Bit 29 = 0 → 11-bit ID Bit 29 = 1 → ID = 0x80 + node ID CAN identifier can be changed by the user.

Index	S-idx	Designation	Data type		Default	Details
0x1016	0x00	Consumer heartbeat times Nums consumer heartbeat time	ro	USINT	0x01	Heartbeat monitoring time for the node Number of devices monitored = 1
	0x01	Consumer heartbeat time	rw	UDINT	0	Heartbeat monitoring time for the node Format: 0x0nntttt tttt = monitoring time [ms] nn = node number if nn=0 or tttt=0 → no monitoring
0x1017		Producer heartbeat time	rw	UINT	0	Time intervall [ms] during which the device generates a producer heartbeat

12.2.1 Device-specific CR2040

Transmit PDO communication parameters (index 0x1800…0x18FF):

Index	S-idx	Designation	Data type		Default	Details
0x1800	0x00	Transmit PDO Communication Parameter Number of entries	ro	USINT	0x05	Configuration transmit PDO 1 number of entries = 5
	0x01	COBID used by PDO	rw	UDINT	0x180 + Node ID	CAN ID of the transmit PDO 1 Bit 31 = 0 → PDO is valid Bit 31 = 1 → PDO is not valid
	0x02	transmission type	rw	USINT	0xFF	0x00 = synch acyclic 0x01...0xF0 = synch cyclic; values are only transmitted after „n" synch objects n = 1…240 = 0x01...0xF0 0xFC/0xFD not implemented 0xFE = asynch man. spec. event; values are immediately transferred 0xFF = asynch device profile event; values are immediately transferred
	0x03	inhibit time	rw	UINT	0	delay time in the transmission type "asynch" before the PDO is transmitted again at the earliest. (0...65535 • 100 µs)
	0x04	reserved	rw	USINT	0	reserve
	0x05	event time	rw	UINT	0	max. transfer break in the transmission type „asynch" (0...65535 ms) When this time has elapsed, the PDO is transferred even if the appl. event has not accured.

Index	S-idx	Designation	Data type		Default	Details
0x1801	0x00	Transmit PDO Communication Parameter Number of entries	ro	USINT	0x05	Configuration transmit PDO 2 number of entries = 5
	0x01	COBID used by PDO	rw	UDINT	0x280 + Node ID	CAN ID of the transmit PDO 2 Bit 31 = 0 → PDO is valid Bit 31 = 1 → PDO is not valid
	0x02	transmission type	rw	USINT	0x01	0x00 = synch acyclic 0x01...0xF0 = synch cyclic; values are only transmitted after „n" synch objects n = 1…240 = 0x01...0xF0 0xFC/0xFD not implemented 0xFE = asynch man. spec. event; values are immediately transferred 0xFF = asynch device profile event; values are immediately transferred
	0x03	inhibit time	rw	UINT	0	delay time in the transmission type "asynch" before the PDO is transmitted again at the earliest. (0...65535 • 100 µs)
	0x04	reserved	rw	USINT	0	reserve
	0x05	event time	rw	UINT	0	max. transfer break in the transmission type „asynch" (0...65535 ms) When this time has elapsed, the PDO is transferred even if the appl. event has not accured.

Index	S-idx	Designation	Data type		Default	Details
0x1802	0x00	Transmit PDO Communication Parameter Number of entries	ro	USINT	0x05	Configuration transmit PDO 3 number of entries = 5
	0x01	COBID used by PDO	rw	UDINT	0x380 + Node ID	CAN ID of the transmit PDO 3 Bit 31 = 0 → PDO is valid Bit 31 = 1 → PDO is not valid
	0x02	transmission type	rw	USINT	0x01	0x00 = synch acyclic 0x01...0xF0 = synch cyclic; values are only transmitted after „n" synch objects n = 1…240 = 0x01...0xF0 0xFC/0xFD not implemented 0xFE = asynch man. spec. event; values are immediately transferred 0xFF = asynch device profile event; values are immediately transferred
	0x03	inhibit time	rw	UINT	0	delay time in the transmission type "asynch" before the PDO is transmitted again at the earliest. (0...65535 • 100 µs)
	0x04	reserved	rw	USINT	0	reserve
	0x05	event time	rw	UINT	0	max. transfer break in the transmission type „asynch" (0...65535 ms) When this time has elapsed, the PDO is transferred even if the appl. event has not accured.

Index	S-idx	Designation	Data type		Default	Details
0x1803	0x00	Transmit PDO Communication Parameter Number of entries	ro	USINT	0x05	Configuration transmit PDO 4 number of entries = 5
	0x01	COBID used by PDO	rw	UDINT	0x480 + Node ID	CAN ID of the transmit PDO 4 Bit 31 = 0 → PDO is valid Bit 31 = 1 → PDO is not valid
	0x02	transmission type	rw	USINT	0x01	0x00 = synch acyclic 0x01...0xF0 = synch cyclic; values are only transmitted after „n" synch objects n = 1…240 = 0x01...0xF0 0xFC/0xFD not implemented 0xFE = asynch man. spec. event; values are immediately transferred 0xFF = asynch device profile event; values are immediately transferred
	0x03	inhibit time	rw	UINT	0	delay time in the transmission type "asynch" before the PDO is transmitted again at the earliest. (0...65535 • 100 µs)
	0x04	reserved	rw	USINT	0	reserve
	0x05	event time	rw	UINT	0	max. transfer break in the transmission type „asynch" (0...65535 ms) When this time has elapsed, the PDO is transferred even if the appl. event has not accured.

Index	S-idx	Designation	Data type		Default	Details
0x1804	0x00	Transmit PDO Communication Parameter Number of entries	ro	USINT	0x05	Configuration transmit PDO 5 number of entries = 5
	0x01	COBID used by PDO	rw	UDINT	0x181 + Node ID	CAN ID of the transmit PDO 5 Bit 31 = 0 → PDO is valid Bit 31 = 1 → PDO is not valid
	0x02	transmission type	rw	USINT	0x01	0x00 = synch acyclic 0x01...0xF0 = synch cyclic; values are only transmitted after „n" synch objects n = 1…240 = 0x01...0xF0 0xFC/0xFD not implemented 0xFE = asynch man. spec. event; values are immediately transferred 0xFF = asynch device profile event; values are immediately transferred
	0x03	inhibit time	rw	UINT	0	delay time in the transmission type "asynch" before the PDO is transmitted again at the earliest. (0...65535 • 100 µs)
	0x04	reserved	rw	USINT	0	reserve
	0x05	event time	rw	UINT	0	max. transfer break in the transmission type „asynch" (0...65535 ms) When this time has elapsed, the PDO is transferred even if the appl. event has not accured.

Index	S-idx	Designation	Data type		Default	Details
0x1805	0x00	Transmit PDO Communication Parameter Number of entries	ro	USINT	0x05	Configuration transmit PDO 6 number of entries = 5
	0x01	COBID used by PDO	rw	UDINT	0x281 + Node ID	CAN ID of the transmit PDO 6 Bit 31 = 0 → PDO is valid Bit 31 = 1 → PDO is not valid
	0x02	transmission type	rw	USINT	0x01	0x00 = synch acyclic 0x01...0xF0 = synch cyclic; values are only transmitted after „n" synch objects n = 1…240 = 0x01...0xF0 0xFC/0xFD not implemented 0xFE = asynch man. spec. event; values are immediately transferred 0xFF = asynch device profile event; values are immediately transferred
	0x03	inhibit time	rw	UINT	0	delay time in the transmission type "asynch" before the PDO is transmitted again at the earliest. (0...65535 • 100 µs)
	0x04	reserved	rw	USINT	0	reserve
	0x05	event time	rw	UINT	0	max. transfer break in the transmission type „asynch" (0...65535 ms) When this time has elapsed, the PDO is transferred even if the appl. event has not accured.

Index	S-idx	Designation	Data type		Default	Details
0x1806	0x00	Transmit PDO Communication Parameter Number of entries	ro	USINT	0x05	Configuration transmit PDO 7 number of entries = 5
	0x01	COBID used by PDO	rw	UDINT	0x381 + Node ID	CAN ID of the transmit PDO 7 Bit 31 = 0 → PDO is valid Bit 31 = 1 → PDO is not valid
	0x02	transmission type	rw	USINT	0x01	0x00 = synch acyclic 0x01...0xF0 = synch cyclic; values are only transmitted after „n" synch objects n = 1…240 = 0x01...0xF0 0xFC/0xFD not implemented 0xFE = asynch man. spec. event; values are immediately transferred 0xFF = asynch device profile event; values are immediately transferred
	0x03	inhibit time	rw	UINT	0	delay time in the transmission type "asynch" before the PDO is transmitted again at the earliest. (0...65535 • 100 µs)
	0x04	reserved	rw	USINT	0	reserve
	0x05	event time	rw	UINT	0	max. transfer break in the transmission type „asynch" (0...65535 ms) When this time has elapsed, the PDO is transferred even if the appl. event has not accured.

Index	S-idx	Designation	Data type		Default	Details
0x1807	0x00	Transmit PDO Communication Parameter Number of entries	ro	USINT	0x05	Configuration transmit PDO 8 number of entries = 5
	0x01	COBID used by PDO	rw	UDINT	0x481 + Node ID	CAN ID of the transmit PDO 8 Bit 31 = 0 → PDO is valid Bit 31 = 1 → PDO is not valid
	0x02	transmission type	rw	USINT	0x01	0x00 = synch acyclic 0x01...0xF0 = synch cyclic; values are only transmitted after „n" synch objects n = 1…240 = 0x01...0xF0 0xFC/0xFD not implemented 0xFE = asynch man. spec. event; values are immediately transferred 0xFF = asynch device profile event; values are immediately transferred
	0x03	inhibit time	rw	UINT	0	delay time in the transmission type "asynch" before the PDO is transmitted again at the earliest. (0...65535 • 100 µs)
	0x04	reserved	rw	USINT	0	reserve
	0x05	event time	rw	UINT	0	max. transfer break in the transmission type „asynch" (0...65535 ms) When this time has elapsed, the PDO is transferred even if the appl. event has not accured.

Index	S-idx	Designation	Data type		Default	Details
0x1808	0x00	Transmit PDO Communication Parameter Number of entries	ro	USINT	0x05	Configuration transmit PDO 9 number of entries = 5
	0x01	COBID used by PDO	rw	UDINT	0x182 + Node ID	CAN ID of the transmit PDO 9 Bit 31 = 0 → PDO is valid Bit 31 = 1 → PDO is not valid
	0x02	transmission type	rw	USINT	0x01	0x00 = synch acyclic 0x01...0xF0 = synch cyclic; values are only transmitted after „n" synch objects n = 1…240 = 0x01...0xF0 0xFC/0xFD not implemented 0xFE = asynch man. spec. event; values are immediately transferred 0xFF = asynch device profile event; values are immediately transferred
	0x03	inhibit time	rw	UINT	0	delay time in the transmission type "asynch" before the PDO is transmitted again at the earliest. (0...65535 • 100 µs)
	0x04	reserved	rw	USINT	0	reserve
	0x05	event time	rw	UINT	0	max. transfer break in the transmission type „asynch" (0...65535 ms) When this time has elapsed, the PDO is transferred even if the appl. event has not accured.

Index	S-idx	Designation	Data type		Default	Details
0x1809	0x00	Transmit PDO Communication Parameter Number of entries	ro	USINT	0x05	Configuration transmit PDO 10 number of entries = 5
	0x01	COBID used by PDO	rw	UDINT	0x282 + Node ID	CAN ID of the transmit PDO 10 Bit 31 = 0 → PDO is valid Bit 31 = 1 → PDO is not valid
	0x02	transmission type	rw	USINT	0x01	0x00 = synch acyclic 0x01...0xF0 = synch cyclic; values are only transmitted after „n" synch objects n = 1…240 = 0x01...0xF0 0xFC/0xFD not implemented 0xFE = asynch man. spec. event; values are immediately transferred 0xFF = asynch device profile event; values are immediately transferred
	0x03	inhibit time	rw	UINT	0	delay time in the transmission type "asynch" before the PDO is transmitted again at the earliest. (0...65535 • 100 µs)
	0x04	reserved	rw	USINT	0	reserve
	0x05	event time	rw	UINT	0	max. transfer break in the transmission type „asynch" (0...65535 ms) When this time has elapsed, the PDO is transferred even if the appl. event has not accured.

Transmit PDO mapping (index 0x1A00…0x1AFF):

Index	S-idx	Designation	Data type		Default	Details
0x1A00	0x00	Transmit PDO mapping Number of mapped objects in PDO	rw	USINT	0x07	mapping transmit PDO 1 number of integrated application objects = 7
	0x01	PDO mapping	rw	UDINT	0x6000 0108	Index 0x6000, SubIndex 0x01 binary inputs 00...07: actual values (bit coded)
	0x02	PDO mapping	rw	UDINT	0x6000 0208	Index 0x6000, SubIndex 0x02 binary inputs 08…15: actual values (bit coded)
	0x03	PDO mapping	rw	UDINT	0x2020 0108	Index 0x2020, SubIndex 0x01 binary inputs 00...07: flag "short circuit" (bit coded)
	0x04	PDO mapping	rw	UDINT	0x2020 0208	Index 0x2020, SubIndex 0x02 binary inputs 08…15: flag "short circuit" (bit coded)
	0x05	PDO mapping	rw	UDINT	0x2021 0108	Index 0x2021, SubIndex 0x01 outputs 00...07: flag " wire break " (bit coded)
	0x06	PDO mapping	rw	UDINT	0x2021 0208	Index 0x2021, SubIndex 0x02 outputs 08…15: flag " wire break " (bit coded)
	0x07	PDO mapping	rw	UDINT	0x2025 0108	Index 0x2025, SubIndex 0x01 inputs 00...03: flag " overload " (bit coded)

Index	S-idx	Designation	Data type		Default	Details
0x1A01	0x00	Transmit PDO mapping Number of mapped objects in PDO	rw	USINT	0x04	mapping transmit PDO 2 (analogue inputs) number of integrated application objects = 4
	0x01	PDO mapping	rw	UDINT	0x6404 0110	Index 0x6404, SubIndex 0x01 analogue input 00: actual value (depending on the configuration 0x2000)
	0x02	PDO mapping	rw	UDINT	0x6404 0210	Index 0x6404, SubIndex 0x02 analogue input 01: actual value (depending on the configuration 0x2000))
	0x03	PDO mapping	rw	UDINT	0x6404 0310	Index 0x6404, SubIndex 0x03 analogue input 02: actual value (depending on the configuration 0x2000)
	0x04	PDO mapping	rw	UDINT	0x6404 0410	Index 0x6404, SubIndex 0x04 analogue input 03: actual value (depending on the configuration 0x2000)
0x1A02	0x00	Transmit PDO mapping Number of mapped objects in PDO	rw	USINT	0x04	mapping transmit PDO 3 (analogue inputs) number of integrated application objects = 4
	0x01	PDO mapping	rw	UDINT	0x6404 0510	Index 0x6404, SubIndex 0x05 analogue input 04: actual value (depending on the configuration 0x2000)
	0x02	PDO mapping	rw	UDINT	0x6404 0610	Index 0x6404, SubIndex 0x06 analogue input 05: actual value (depending on the configuration 0x2000))
	0x03	PDO mapping	rw	UDINT	0x6404 0710	Index 0x6404, SubIndex 0x07 analogue input 06: actual value (depending on the configuration 0x2000)
	0x04	PDO mapping	rw	UDINT	0x6404 0810	Index 0x6404, SubIndex 0x08 analogue input 07: actual value (depending on the configuration 0x2000)

Index	S-idx	Designation	Data type		Default	Details
0x1A03	0x00	Transmit PDO mapping Number of mapped objects in PDO	rw	USINT	0x04	mapping transmit PDO 4 number of integrated application objects = 4
	0x01	PDO mapping	rw	UDINT	0x2030 0110	Index 0x2030, SubIndex 0x01 input 08: actual resistor value
	0x02	PDO mapping	rw	UDINT	0x2030 0210	Index 0x2030, SubIndex 0x02 input 10: actual resistor value
	0x03	PDO mapping	rw	UDINT	0x2030 0310	Index 0x2030, SubIndex 0x03 input 12: actual resistor value
	0x04	PDO mapping	rw	UDINT	0x2030 0410	Index 0x2030, SubIndex 0x04 input 14: actual resistor value
0x1A04	0x00	Transmit PDO mapping Number of mapped objects in PDO	rw	USINT	0x02	mapping transmit PDO 5 (periode time IN09, IN11) number of integrated application objects = 2
	0x01	PDO mapping	rw	UDINT	0x2012 0120	Index 0x2012, SubIndex 0x01 frequency input IN09: periode time of the signal
	0x02	PDO mapping	rw	UDINT	0x2012 0220	Index 0x2012, SubIndex 0x02 frequency input IN11: periode time of the signal
0x1A05	0x00	Transmit PDO mapping Number of mapped objects in PDO	rw	USINT	0x02	mapping transmit PDO 6 (periode time IN13, IN15) number of integrated application objects = 2
	0x01	PDO mapping	rw	UDINT	0x2012 0320	Index 0x2012, SubIndex 0x03 frequency input IN13: periode time of the signal
	0x02	PDO mapping	rw	UDINT	0x2012 0420	Index 0x2012, SubIndex 0x04 frequency input IN15: periode time of the signal

Index	S-idx	Designation	Data type		Default	Details
0x1A06	0x00	Transmit PDO mapping Number of mapped objects in PDO	rw	USINT	0x04	mapping transmit PDO 7 (duty cycle of the signal on the frequency input IN09, IN11, IN13, IN15) number of integrated application objects = 4
	0x01	PDO mapping	rw	UDINT	0x2014 0110	Index 0x2014, SubIndex 0x01 frequency input IN09: duty cycle of the signal in ‰
	0x02	PDO mapping	rw	UDINT	0x2014 0210	Index 0x2014, SubIndex 0x02 frequency input IN11: duty cycle of the signal in ‰
	0x03	PDO mapping	rw	UDINT	0x2014 0310	Index 0x2014, SubIndex 0x03 frequency input IN13: duty cycle of the signal in ‰
	0x04	PDO mapping	rw	UDINT	0x2014 0410	Index 0x2014, SubIndex 0x04 frequency input IN15: duty cycle of the signal in ‰
0x1A07	0x00	Transmit PDO mapping Number of mapped objects in PDO	rw	USINT	0x02	mapping transmit PDO 8 (frequency on IN09, IN11) number of integrated application objects = 2
	0x01	PDO mapping	rw	UDINT	0x2015 0120	Index 0x2015, SubIndex 0x01 frequency input IN09: frequency value of the signal in Hz
	0x02	PDO mapping	rw	UDINT	0x2015 0220	Index 0x2015, SubIndex 0x02 frequency input IN11: frequency value of the signal in Hz
0x1A08	0x00	Transmit PDO mapping Number of mapped objects in PDO	rw	USINT	0x02	mapping transmit PDO 9 (frequency on IN13, IN15) number of integrated application objects = 2
	0x01	PDO mapping	rw	UDINT	0x2015 0320	Index 0x2015, SubIndex 0x03 frequency input IN13: frequency value of the signal in Hz
	0x02	PDO mapping	rw	UDINT	0x2015 0420	Index 0x2015, SubIndex 0x04 frequency input IN15: frequency value of the signal in Hz

Index	S-idx	Designation	Data type		Default	Details
0x1A09	0x00	Transmit PDO mapping Number of mapped objects in PDO	rw	USINT	0x02	mapping transmit PDO 10 (system flag) number of integrated application objects = 2
	0x01	PDO mapping	rw	UDINT	0x2040 0110	Index 0x2040, SubIndex 0x01 supply voltage of the system VBBS
	0x02	PDO mapping	rw	UDINT	0x2050 0010	Index 0x2050, SubIndex 0x00 system temperature in °C

Manufacturer-specific objekts (index 0x2000...0x6FFF):

Index	S-idx	Designation	Data type		Default	Details	
0x2000	0x00	IO configuration Largest sub-index supported	ro	USINT	16	Configuration inputs/outputs largest supported Sub-index = 32	
	0x01	Configuration IN00	rw	USINT	10	0 = 0x00 3 = 0x03 6 = 0x06 7 = 0x07 9 = 0x09 10 = 0x0A 11 = 0x0B 12 = 0x0C	off Input IN00 0...10 000 mV ratiometric 0...1000 ‰ 0...20 000 µA 0...32 000 mV binary plus switched binary plus switched with diagnosis binary minus switched
	0x02	Configuration IN01	rw	USINT	10	0 = 0x00 3 = 0x03 6 = 0x06 7 = 0x07 9 = 0x09 10 = 0x0A 11 = 0x0B 12 = 0x0C	off Input IN01 0...10 000 mV ratiometric 0...1000 ‰ 0...20 000 µA 0...32 000 mV binary plus switched binary plus switched with diagnosis binary minus switched
	0x03	Configuration IN02	rw	USINT	10	0 = 0x00 3 = 0x03 6 = 0x06 7 = 0x07 9 = 0x09 10 = 0x0A 11 = 0x0B 12 = 0x0C	off Input IN02 0...10 000 mV ratiometric 0...1000 ‰ 0...20 000 µA 0...32 000 mV binary plus switched binary plus switched with diagnosis binary minus switched

Index	S-idx	Designation	Data type		Default	Details	
0x2000	0x04	Configuration IN03	rw	USINT	10	0 = 0x00 3 = 0x03 6 = 0x06 7 = 0x07 9 = 0x09 10 = 0x0A 11 = 0x0B 12 = 0x0C	off Input IN03 0...10 000 mV ratiometric 0...1000 ‰ 0...20 000 µA 0...32 000 mV binary plus switched binary plus switched with diagnosis binary minus switched
	0x05	Configuration IN04	rw	USINT	10	0 = 0x00 3 = 0x03 6 = 0x06 7 = 0x07 9 = 0x09 10 = 0x0A 11 = 0x0B 12 = 0x0C	off Input IN04 0...10 000 mV ratiometric 0...1000 ‰ 0...20 000 µA 0...32 000 mV binary plus switched binary plus switched with diagnosis binary minus switched
	0x06	Configuration IN05	rw	USINT	10	0 = 0x00 3 = 0x03 6 = 0x06 7 = 0x07 9 = 0x09 10 = 0x0A 11 = 0x0B 12 = 0x0C	off Input IN05 0...10 000 mV ratiometric 0...1000 ‰ 0...20 000 µA 0...32 000 mV binary plus switched binary plus switched with diagnosis binary minus switched
	0x07	Configuration IN06	rw	USINT	10	0 = 0x00 3 = 0x03 6 = 0x06 7 = 0x07 9 = 0x09 10 = 0x0A 11 = 0x0B 12 = 0x0C	off Input IN06 0...10 000 mV ratiometric 0...1000 ‰ 0...20 000 µA 0...32 000 mV binary plus switched binary plus switched with diagnosis binary minus switched
	0x08	Configuration IN07	rw	USINT	10	0 = 0x00 3 = 0x03 6 = 0x06 7 = 0x07 9 = 0x09 10 = 0x0A 11 = 0x0B 12 = 0x0C	off Input IN07 0...10 000 mV ratiometric 0...1000 ‰ 0...20 000 µA 0...32 000 mV binary plus switched binary plus switched with diagnosis binary minus switched
	0x09	Configuration IN08	rw	USINT	10	0 = 0x00 10 = 0x0A 11 = 0x0B 18 = 0x12	off Input IN08 binary plus switched binary plus switched with diagnosis 16…30 000 Ohm

Index	S-idx	Designation	Data type		Default	Details	
0x2000	0x0A	Configuration IN09	rw	USINT	01	0 = 0x00 01 = 0x01 14 = 0x0E 20 = 0x14	off Input IN09 binary plus switched frequency 0…30 000 Hz period duration
	0x0B	Configuration IN10	rw	USINT	10	0 = 0x00 10 = 0x0A 11 = 0x0B 18 = 0x12	off Input IN10 binary plus switched binary plus switched with diagnosis 16…30 000 Ohm
	0x0C	Configuration IN11	rw	USINT	01	0 = 0x00 01 = 0x01 14 = 0x0E 20 = 0x14	off Input IN11 binary plus switched frequency 0…30 000 Hz period duration
	0x0D	Configuration IN12	rw	USINT	10	0 = 0x00 10 = 0x0A 11 = 0x0B 18 = 0x12	off Input IN12 binary plus switched binary plus switched with diagnosis 16…30 000 Ohm
	0x0E	Configuration IN13	rw	USINT	01	0 = 0x00 01 = 0x01 14 = 0x0E 20 = 0x14	off Input IN12 binary plus switched frequency 0…30 000 Hz period duration
	0x0F	Configuration IN14	rw	USINT	10	0 = 0x00 10 = 0x0A 11 = 0x0B 18 = 0x12	off Input IN14 binary plus switched binary plus switched with diagnosis 16…30 000 Ohm
	0x10	Configuration IN15	rw	USINT	01	0 = 0x00 01 = 0x01 14 = 0x0E 20 = 0x14	off Input IN15 binary plus switched frequency 0…30 000 Hz period duration
0x2012	0x00	Period input	ro	USINT	4	Largest sub-index supported	
	0x01	Period duration IN09	ro	UDINT	0	IN09 period duration [µs]	
	0x02	Period duration IN11	ro	UDINT	0	IN11 period duration [µs]	
	0x03	Period duration IN13	ro	UDINT	0	IN13 period duration [µs]	
	0x04	Period duration IN15	ro	UDINT	0	IN15 period duration [µs]	

Index	S-idx	Designation	Data type		Default	Details	
0x2013	0x00	Period input number of periods for average	ro	USINT	4	Largest sub-index supported	
	0x01	Number of periods IN09	rw	USINT	4	1…255	IN09 number of periods
	0x02	Number of periods IN11	rw	USINT	4	1…255	IN11 number of periods
	0x03	Number of periods IN13	rw	USINT	4	1…255	IN13 number of periods
	0x04	Number of periods IN15	rw	USINT	4	1…255	IN15 number of periods
0x2014	0x00	Period input – ratio value	ro	USINT	4	Largest sub-index supported	
	0x01	Period ratio value IN09	ro	UINT	0	0…1 000	IN09 marc-to-space ratio [‰]
	0x02	Period ratio value IN11	ro	UINT	0	0…1 000	IN11 marc-to-space ratio [‰]
	0x03	Period ratio value IN13	ro	UINT	0	0…1 000	IN13 marc-to-space ratio [‰]
	0x04	Period ratio value IN15	ro	UINT	0	0…1 000	IN15 marc-to-space ratio [‰]
0x2015	0x00	Frequency input	ro	USINT	4	Largest sub-index supported	
	0x01	Frequency IN09	ro	REAL	1	0…30 000	IN09 frequency [Hz]
	0x02	Frequency IN11	ro	REAL	1	0…30 000	IN11 frequency [Hz]
	0x03	Frequency IN13	ro	REAL	1	0…30 000	IN13 frequency [Hz]
	0x04	Frequency IN15	ro	REAL	1	0…30 000	IN15 frequency [Hz]
0x2016	0x00	Timebase	ro	USINT	4	Largest sub-index supported	
	0x01	Timebase IN09	rw	UINT	50	0…2 000	IN09 timebase [ms]
	0x02	Timebase IN11	rw	UINT	50	0…2 000	IN11 timebase [ms]
	0x03	Timebase IN13	rw	UINT	50	0…2 000	IN13 timebase [ms]
	0x04	Timebase IN15	rw	UINT	50	0…2 000	IN15 timebase [ms]

Index	S-idx	Designation	Data type		Default	Details	
0x2020	0x00	Input – short to supply voltage	ro	USINT	2	Largest sub-index supported	
	0x01	Short to supply voltage IN00...IN07	ro	USINT	0	0 = normal 1 = short circuit	channels (bit coded) 0b---- ---X = IN00 0b---- --X- = IN01 0b---- -X-- = IN02 0b---- X--- = IN03 0b---X ---- = IN04 0b--X- ---- = IN05 0b-X-- ---- = IN06 0bX--- ---- = IN07
	0x02	Short to supply voltage IN08, IN10, IN12, IN14	ro	USINT	0	0 = normal 1 = short circuit	channels (bit coded) 0b---- ---X = IN08 0b---- --X- = IN10 0b---- -X-- = IN12 0b---- X--- = IN14
0x2021	0x00	Input – wire break	ro	USINT	2	Largest sub-index supported	
	0x01	Wire break IN00...IN07	ro	USINT	0	0 = normal 1 = wire break	channels (bit coded) 0b---- ---X = IN00 0b---- --X- = IN01 0b---- -X-- = IN02 0b---- X--- = IN03 0b---X ---- = IN04 0b--X- ---- = IN05 0b-X-- ---- = IN06 0bX--- ---- = IN07
	0x02	Wire break IN08, IN10, IN12, IN14	ro	USINT	0	0 = normal 1 = wire break	channels (bit coded) 0b---- ---X = IN08 0b---- --X- = IN10 0b---- -X-- = IN12 0b---- X--- = IN14
0x2025	0x00	Input analog – overcurrent	ro	USINT	1	Largest sub-index supported	
	0x01	Overcurrent IN00...IN07	ro	USINT	0	0 = normal 1 = overcurrent	channels (bit coded) 0b---- ---X = IN00 0b---- --X- = IN01 0b---- -X-- = IN02 0b---- X--- = IN03 0b---X ---- = IN04 0b--X- ---- = IN05 0b-X-- ---- = IN06 0bX--- ---- = IN07

Index	S-idx	Designation	Data type		Default	Details	
0x2030	0x00	Input resistor	ro	USINT	4	Largest sub-index supported	
	0x01	Resistance IN08	ro	UINT	0	0…30 000	IN08 resistance [Ohms]
	0x02	Resistance IN10	ro	UINT	0	0…30 000	IN10 resistance [Ohms]
	0x03	Resistance IN12	ro	UINT	0	0…30 000	IN12 resistance [Ohms]
	0x04	Resistance IN14	ro	UINT	0	0…30 000	IN14 resistance [Ohms]
0x2040	0x00	System supply voltage VBBS	ro	USINT	1	Largest sub-index supported	
	0x01	VBBS	ro	USINT	0	VBBS voltage [mV]	
0x2050		Device temperature	ro	UINT	0	temperature [°C]	
0x20F0		Node ID	rw	USINT	125	1…125	node ID [!] value(0x20F0) != value(20F1)
0x20F1		Node ID	rw	USINT	125	1…125	node ID [!] value(0x20F0) != value(20F1)
0x20F2		Baud rate	rw	USINT	3	baud rate [!] value(0x20F2) != value(20F3)	
						0	1000 kBit/s
						1	800 kBit/s
						2	500 kBit/s
						3	250 kBit/s
						4	125 kBit/s
						5	100 kBit/s
						6	50 kBit/s
						7	20 kBit/s
0x20F3		Baud rate	rw	USINT	3	baud rate [!] value(0x20F2) != value(20F3)	
0x20F4		Autostart	rw	UINT	0	not used	
0x20F5		Lock edit mode	rw	USINT	0	0 = edit mode unlocked 1 = edit mode locked	
0x20F6		CAN interface	rw	USINT	1	1...2	CAN interface [!] value(0x20F6) != value(20F7)
0x20F7		CAN interface	rw	USINT	1	1...2	CAN interface [!] value(0x20F6) != value(20F7)

UK

Index	S-idx	Designation	Data type		Default	Details
0x6000	0x00	Binary input Largest sub-index supported	ro	USINT	0x02	Binary inputs Largest supported sub-index = 2
	0x01	Binary inputs IN00 - IN07	ro	USINT	0	Binary inputs IN00…IN07 0b---- ---X = IN00 0b---- --X- = IN01 0b---- -X-- = IN02 0b---- X--- = IN03 0b---X ---- = IN04 0b--X- ---- = IN05 0b-X-- ---- = IN06 0bX--- ---- = IN07
	0x02	Binary inputs IN08 - IN15	ro	USINT	0	Binary inputs IN08…IN15 0b---- ---X = IN08 0b---- --X- = IN09 0b---- -X-- = IN10 0b---- X--- = IN11 0b---X ---- = IN12 0b--X- ---- = IN13 0b-X-- ---- = IN14 0bX--- ---- = IN15
0x6404	0x00	Analogue input Largest sub-index supported	ro	USINT	0x08	Analogue inputs Largest supported sub-index = 4
	0x01	Analogue input IN00	ro	UINT	--	Analogue value of input IN00
	0x02	Analogue input IN01	ro	UINT	--	Analogue value of input IN01
	0x03	Analogue input IN02	ro	UINT	--	Analogue value of input IN02
	0x04	Analogue input IN03	ro	UINT	--	Analogue value of input IN03
	0x05	Analogue input IN04	ro	UINT	--	Analogue value of input IN04
	0x06	Analogue input IN05	ro	UINT	--	Analogue value of input IN05
	0x07	Analogue input IN06	ro	UINT	--	Analogue value of input IN06
	0x08	Analogue input IN07	ro	UINT	--	Analogue value of input IN07

12.2.2 Device-specific CR2041

Receive PDO communication parameters (index 0x1400…0x14FF):

Index	S-idx	Designation	Data type		Default	Details
0x1400	0x00	Receive PDO Communication Parameter Number of entries	ro	USINT	0x02	Receive PDO 1: binary outputs 0 - 15 number of entries = 2
	0x01	COBID used by PDO	rw	UDINT	0x200 + node ID	CAN ID of the first read PDO Bit 31 = 0 → PDO is valid Bit 31 = 1 → PDO is not valid
	0x02	transmission type	rw	USINT	0x01	0x00 = synch acyclic 0x01...0xF0 = synch cyclic; outputs are only updated after „n" synch objects n = 1…240 = 0x01...0xF0 0xFC/0xFD not implemented 0xFE = asynch man. spec. event; outputs are updated immediately 0xFF = asynch device profile event; outputs are updated immediately
0x1401	0x00	Receive PDO Communication Parameter Number of entries	ro	USINT	0x02	Receive PDO 2: PWM outputs 0 - 3 number of entries = 2
	0x01	COBID used by PDO	rw	UDINT	0x300 + node ID	CAN ID of the second read PDO Bit 31 = 0 → PDO is valid Bit 31 = 1 → PDO is not valid
	0x02	transmission type	rw	USINT	0x01	0x00 = synch acyclic 0x01...0xF0 = synch cyclic; outputs are only updated after „n" synch objects n = 1…240 = 0x01...0xF0 0xFC/0xFD not implemented 0xFE = asynch man. spec. event; outputs are updated immediately 0xFF = asynch device profile event; outputs are updated immediately

Index	S-idx	Designation	Data type		Default	Details
0x1402	0x00	Receive PDO Communication Parameter Number of entries	ro	USINT	0x02	Receive PDO 3: PWM outputs 4 - 7 number of entries = 2
	0x01	COBID used by PDO	rw	UDINT	0x400 + node ID	CAN-ID of the 3. read PDO Bit 31 = 0 → PDO is valid Bit 31 = 1 → PDO is not valid
	0x02	transmission type	rw	USINT	0x01	0x00 = synch acyclic 0x01...0xF0 = synch cyclic; outputs are only updated after „n" synch objects n = 1…240 = 0x01...0xF0 0xFC/0xFD not implemented 0xFE = asynch man. spec. event; outputs are updated immediately 0xFF = asynch device profile event; outputs are updated immediately
0x1403	0x00	Receive PDO Communication Parameter Number of entries	ro	USINT	0x02	Receive PDO 4: PWM outputs 8 - 11 number of entries = 2
	0x01	COBID used by PDO	rw	UDINT	0x500 + node ID	CAN-ID of the 3. read PDO Bit 31 = 0 → PDO is valid Bit 31 = 1 → PDO is not valid
	0x02	transmission type	rw	USINT	0x01	0x00 = synch acyclic 0x01...0xF0 = synch cyclic; outputs are only updated after „n" synch objects n = 1…240 = 0x01...0xF0 0xFC/0xFD not implemented 0xFE = asynch man. spec. event; outputs are updated immediately 0xFF = asynch device profile event; outputs are updated immediately

Index	S-idx	Designation	Data type		Default	Details
0x1404	0x00	Receive PDO Communication Parameter Number of entries	ro	USINT	0x02	Receive PDO 5: PWM outputs 12 - 15 number of entries = 2
	0x01	COBID used by PDO	rw	UDINT	0x201 + node ID	CAN-ID of the 3. read PDO Bit 31 = 0 → PDO is valid Bit 31 = 1 → PDO is not valid
	0x02	transmission type	rw	USINT	0x01	0x00 = synch acyclic 0x01...0xF0 = synch cyclic; outputs are only updated after „n" synch objects n = 1…240 = 0x01...0xF0 0xFC/0xFD not implemented 0xFE = asynch man. spec. event; outputs are updated immediately 0xFF = asynch device profile event; outputs are updated immediately

Receive PDO mapping (index 0x1600…0x16FF):

Index	S-idx	Designation	Data type		Default	Details
0x1600	0x00	Receive PDO mapping Number of mapped objects in PDO	rw	USINT	0x02	Mapping read PDO 1: binary outputs number of integrated application objects = 2
	0x01	PDO mapping	ro	UDINT	0x6200 0108	1 byte in index 0x6200, SubIndex 01 Binary outputs OUT00…OUT07 0b---- ---X = OUT00 0b---- --X- = OUT01 0b---- -X-- = OUT02 0b---- X--- = OUT03 0b---X ---- = OUT04 0b--X- ---- = OUT05 0b-X-- ---- = OUT06 0bX--- ---- = OUT07
	0x02	PDO mapping	ro	UDINT	0x6200 0208	1 byte in index 0x6200, SubIndex 02 Binary outputs OUT08…OUT15 0b---- ---X = OUT08 0b---- --X- = OUT09 0b---- -X-- = OUT10 0b---- X--- = OUT11 0b---X ---- = OUT12 0b--X- ---- = OUT13 0b-X-- ---- = OUT14 0bX--- ---- = OUT15

Index	S-idx	Designation	Data type		Default	Details
0x1601	0x00	Receive PDO mapping Number of mapped objects in PDO	rw	USINT	0x04	Mapping read PDO 2: PWM outputs OUT00…OUT03 number of integrated application objects = 4
	0x01	PDO mapping	rw	UDINT	0x6414 0110	PWM/current output OUT00 Index 0x6414, SubIndex 0x01 contains the preset value of the PWM output OUT00, the value is interpreted as duty cycle in ‰ or as target current value (depending on the configuration index 0x2000)
	0x02	PDO mapping	rw	UDINT	0x6414 0210	PWM/ current output OUT01 Index 0x6414, SubIndex 0x02 contains the preset value of the PWM output OUT01, the value is interpreted as duty cycle in ‰ or as target current value (depending on the configuration index 0x2000)
	0x03	PDO mapping	rw	UDINT	0x6414 0310	PWM/ current output OUT02 Index 0x6414, SubIndex 0x03 contains the preset value of the PWM output OUT02, the value is interpreted as duty cycle in ‰ or as target current value (depending on the configuration index 0x2000)
	0x04	PDO mapping	rw	UDINT	0x6414 0410	PWM/ current output OUT03 Index 0x6414, SubIndex 0x04 contains the preset value of the PWM output OUT03, the value is interpreted as duty cycle in ‰ or as target current value (depending on the configuration index 0x2000)

Index	S-idx	Designation	Data type		Default	Details
0x1602	0x00	"Receive PDO mapping Number of mapped objects in PDO"	rw	USINT	0x04	Mapping read PDO 3: PWM outputs OUT04…OUT07 number of integrated application objects = 4
	0x01	PDO mapping	rw	UDINT	0x6414 0510	PWM/ current output OUT04 Index 0x6414, SubIndex 0x05 contains the preset value of the PWM output OUT04, the value is interpreted as duty cycle in ‰ or as target current value (depending on the configuration index 0x2000)
	0x02	PDO mapping	rw	UDINT	0x6414 0610	PWM/ current output OUT05 Index 0x6414, SubIndex 0x06 contains the preset value of the PWM output OUT05, the value is interpreted as duty cycle in ‰ or as target current value (depending on the configuration index 0x2000)
	0x03	PDO mapping	rw	UDINT	0x6414 0710	PWM/ current output OUT06 Index 0x6414, SubIndex 0x07 contains the preset value of the PWM output OUT06, the value is interpreted as duty cycle in ‰ or as target current value (depending on the configuration index 0x2000)
	0x04	PDO mapping	rw	UDINT	0x6414 0810	PWM/ current output OUT07 Index 0x6414, SubIndex 0x08 contains the preset value of the PWM output OUT07, the value is interpreted as duty cycle in ‰ or as target current value (depending on the configuration index 0x2000)

Index	S-idx	Designation	Data type		Default	Details
0x1603	0x00	Receive PDO mapping Number of mapped objects in PDO	rw	USINT	0x04	Mapping read PDO 4: PWM outputs OUT08…OUT11 number of integrated application objects = 4
	0x01	PDO mapping	rw	UDINT	0x6414 0910	PWM/ current output OUT08 Index 0x6414, SubIndex 0x09 contains the preset value of the PWM output OUT08, the value is interpreted as duty cycle in ‰ or as target current value (depending on the configuration index 0x2000)
	0x02	PDO mapping	rw	UDINT	0x6414 0A10	PWM/ current output OUT09 Index 0x6414, SubIndex 0x0A contains the preset value of the PWM output OUT09, the value is interpreted as duty cycle in ‰ or as target current value (depending on the configuration index 0x2000)
	0x03	PDO mapping	rw	UDINT	0x6414 0B10	PWM/ current output OUT10 Index 0x6414, SubIndex 0x0B contains the preset value of the PWM output OUT10, the value is interpreted as duty cycle in ‰ or as target current value (depending on the configuration index 0x2000)
	0x04	PDO mapping	rw	UDINT	0x6414 0C10	PWM/ current output OUT11 Index 0x6414, SubIndex 0x0C contains the preset value of the PWM output OUT11, the value is interpreted as duty cycle in ‰ or as target current value (depending on the configuration index 0x2000)

Index	S-idx	Designation	Data type		Default	Details
0x1604	0x00	Receive PDO mapping Number of mapped objects in PDO	rw	USINT	0x04	Mapping read PDO 5: PWM outputs OUT12…OUT15 number of integrated application objects = 4
	0x01	PDO mapping	rw	UDINT	0x6414 0D10	PWM/ current output OUT12 Index 0x6414, SubIndex 0x0D contains the preset value of the PWM output OUT12, the value is interpreted as duty cycle in ‰ or as target current value (depending on the configuration index 0x2000)
	0x02	PDO mapping	rw	UDINT	0x6414 0E10	PWM/ current output OUT13 Index 0x6414, SubIndex 0x0E contains the preset value of the PWM output OUT13, the value is interpreted as duty cycle in ‰ or as target current value (depending on the configuration index 0x2000)
	0x03	PDO mapping	rw	UDINT	0x6414 0F10	PWM/ current output OUT14 Index 0x6414, SubIndex 0x0F contains the preset value of the PWM output OUT14, the value is interpreted as duty cycle in ‰ or as target current value (depending on the configuration index 0x2000)
	0x04	PDO mapping	rw	UDINT	0x6414 1010	PWM/ current output OUT15 Index 0x6414, SubIndex 0x10 contains the preset value of the PWM output OUT15, the value is interpreted as duty cycle in ‰ or as target current value (depending on the configuration index 0x2000)

Transmit PDO communication parameters (index 0x1800…0x18FF):

Index	S-idx	Designation	Data type		Default	Details
0x1800	0x00	Transmit PDO Communication Parameter Number of entries	ro	USINT	0x05	Configuration transmit PDO 1 number of entries = 5
	0x01	COBID used by PDO	rw	UDINT	0x180 + Node ID	CAN ID of the transmit PDO 1 Bit 31 = 0 → PDO is valid Bit 31 = 1 → PDO is not valid
	0x02	transmission type	rw	USINT	0x01	0x00 = synch acyclic 0x01...0xF0 = synch cyclic; values are only transmitted after „n" synch objects n = 1…240 = 0x01...0xF0 0xFC/0xFD not implemented 0xFE = asynch man. spec. event; values are immediately transferred 0xFF = asynch device profile event; values are immediately transferred
	0x03	inhibit time	rw	UINT	0	delay time in the transmission type "asynch" before the PDO is transmitted again at the earliest. (0...65535 • 100 µs)
	0x04	reserved	rw	USINT	0	reserve
	0x05	event time	rw	UINT	0	max. transfer break in the transmission type „asynch" (0...65535 ms) When this time has elapsed, the PDO is transferred even if the appl. event has not accured.

Index	S-idx	Designation	Data type		Default	Details
0x1801	0x00	Transmit PDO Communication Parameter Number of entries	ro	USINT	0x05	Configuration transmit PDO 2 number of entries = 5
	0x01	COBID used by PDO	rw	UDINT	0x280 + Node ID	CAN ID of the transmit PDO 2 Bit 31 = 0 → PDO is valid Bit 31 = 1 → PDO is not valid
	0x02	transmission type	rw	USINT	0x01	0x00 = synch acyclic 0x01...0xF0 = synch cyclic; values are only transmitted after „n" synch objects n = 1…240 = 0x01...0xF0 0xFC/0xFD not implemented 0xFE = asynch man. spec. event; values are immediately transferred 0xFF = asynch device profile event; values are immediately transferred
	0x03	inhibit time	rw	UINT	0	delay time in the transmission type "asynch" before the PDO is transmitted again at the earliest. (0...65535 • 100 µs)
	0x04	reserved	rw	USINT	0	reserve
	0x05	event time	rw	UINT	0	max. transfer break in the transmission type „asynch" (0...65535 ms) When this time has elapsed, the PDO is transferred even if the appl. event has not accured.

Index	S-idx	Designation	Data type		Default	Details
0x1802	0x00	Transmit PDO Communication Parameter Number of entries	ro	USINT	0x05	Configuration transmit PDO 3 number of entries = 5
	0x01	COBID used by PDO	rw	UDINT	0x380 + Node ID	CAN ID of the transmit PDO 3 Bit 31 = 0 → PDO is valid Bit 31 = 1 → PDO is not valid
	0x02	transmission type	rw	USINT	0x01	0x00 = synch acyclic 0x01...0xF0 = synch cyclic; values are only transmitted after „n" synch objects n = 1…240 = 0x01...0xF0 0xFC/0xFD not implemented 0xFE = asynch man. spec. event; values are immediately transferred 0xFF = asynch device profile event; values are immediately transferred
	0x03	inhibit time	rw	UINT	0	delay time in the transmission type "asynch" before the PDO is transmitted again at the earliest. (0...65535 • 100 µs)
	0x04	reserved	rw	USINT	0	reserve
	0x05	event time	rw	UINT	0	max. transfer break in the transmission type „asynch" (0...65535 ms) When this time has elapsed, the PDO is transferred even if the appl. event has not accured.

Index	S-idx	Designation	Data type		Default	Details
0x1803	0x00	Transmit PDO Communication Parameter Number of entries	ro	USINT	0x05	Configuration transmit PDO 4 number of entries = 5
	0x01	COBID used by PDO	rw	UDINT	0x480 + Node ID	CAN ID of the transmit PDO 4 Bit 31 = 0 → PDO is valid Bit 31 = 1 → PDO is not valid
	0x02	transmission type	rw	USINT	0x01	0x00 = synch acyclic 0x01...0xF0 = synch cyclic; values are only transmitted after „n" synch objects n = 1…240 = 0x01...0xF0 0xFC/0xFD not implemented 0xFE = asynch man. spec. event; values are immediately transferred 0xFF = asynch device profile event; values are immediately transferred
	0x03	inhibit time	rw	UINT	0	delay time in the transmission type "asynch" before the PDO is transmitted again at the earliest. (0...65535 • 100 µs)
	0x04	reserved	rw	USINT	0	reserve
	0x05	event time	rw	UINT	0	max. transfer break in the transmission type „asynch" (0...65535 ms) When this time has elapsed, the PDO is transferred even if the appl. event has not accured.

Transmit PDO mapping (index 0x1A00…0x1AFF):

Index	S-idx	Designation	Data type		Default	Details
0x1A00	0x00	Transmit PDO mapping Number of mapped objects in PDO	rw	USINT	0x04	mapping transmit PDO 01 (output current OUT00...OUT03) number of integrated application objects = 4
	0x01	PDO mapping	rw	UDINT	0x2002 0110	Index 0x2002, SubIndex 0x01 current on output OUT00
	0x02	PDO mapping	rw	UDINT	0x2002 0210	Index 0x2002, SubIndex 0x02 current on output OUT01
	0x03	PDO mapping	rw	UDINT	0x2002 0310	Index 0x2002, SubIndex 0x03 current on output OUT02
	0x04	PDO mapping	rw	UDINT	0x2002 0410	Index 0x2002, SubIndex 0x04 current on output OUT03
0x1A01	0x00	Transmit PDO mapping Number of mapped objects in PDO	rw	USINT	0x04	mapping transmit PDO 02 (output current OUT04...OUT07) number of integrated application objects = 4
	0x01	PDO mapping	rw	UDINT	0x2002 0510	Index 0x2002, SubIndex 0x05 current on output OUT04
	0x02	PDO mapping	rw	UDINT	0x2002 0610	Index 0x2002, SubIndex 0x06 current on output OUT05
	0x03	PDO mapping	rw	UDINT	0x2002 0710	Index 0x2002, SubIndex 0x07 current on output OUT06
	0x04	PDO mapping	rw	UDINT	0x2002 0810	Index 0x2002, SubIndex 0x08 current on output OUT07

Index	S-idx	Designation	Data type		Default	Details
0x1A02	0x00	Transmit PDO mapping Number of mapped objects in PDO	rw	USINT	0x05	mapping transmit PDO 3 number of integrated application objects = 5
	0x01	PDO mapping	rw	UDINT	0x2022 0108	Index 0x2022, SubIndex 0x01 outputs 00...07: flag " short circuit " (bit coded)
	0x02	PDO mapping	rw	UDINT	0x2022 0208	Index 0x2022, SubIndex 0x02 outputs 08…15: flag " short circuit " (bit coded)
	0x03	PDO mapping	rw	UDINT	0x2023 0108	Index 0x2023, SubIndex 0x01 outputs 00...07: flag " wire break " (bit coded)
	0x04	PDO mapping	rw	UDINT	0x2023 0208	Index 0x2023, SubIndex 0x02 outputs 08...015: flag " wire break " (bit coded)
	0x05	PDO mapping	rw	UDINT	0x2024 0108	Index 0x2024, SubIndex 0x01 outputs 00...07: flag " overload " (bit coded)
0x1A03	0x00	Transmit PDO mapping Number of mapped objects in PDO	rw	USINT	0x04	mapping transmit PDO 4 (system flag) number of integrated application objects = 4
	0x01	PDO mapping	rw	UDINT	0x2040 0110	Index 0x2040, SubIndex 0x01 supply voltage of the system VBBS
	0x02	PDO mapping	rw	UDINT	0x2041 0110	Index 0x2041, SubIndex 0x01 output supply voltage VBB1
	0x03	PDO mapping	rw	UDINT	0x2041 0210	Index 0x2041, SubIndex 0x02 output supply voltage VBB2
	0x04	PDO mapping	rw	UDINT	0x2050 0010	Index 0x2050, SubIndex 0x00 system temperature in °C

Manufacturer-specific objekts (index 0x2000...0x6FFF):

Index	S-idx	Designation	Data type		Default	Details	
0x2000	0x00	IO configu-ration Largest sub-index supported	ro	USINT	16	Configuration inputs/outputs largest supported Sub-index = 32	
	0x01	Configuration OUT00	rw	USINT	2	0 = 0x00 2 = 0x02 4 = 0x04 5 = 0x05 15 = 0x0F 16 = 0x10	off Output OUT00 binary plus switched PWM output current control binary plus switched with diagnosis binary plus switched with diagnosis + protection
	0x02	Configuration OUT01	rw	USINT	2	0 = 0x00 2 = 0x02 4 = 0x04 5 = 0x05 15 = 0x0F 16 = 0x10	off Output OUT01 binary plus switched PWM output current control binary plus switched with diagnosis binary plus switched with diagnosis + protection
	0x03	Configuration OUT02	rw	USINT	2	0 = 0x00 2 = 0x02 4 = 0x04 5 = 0x05 15 = 0x0F 16 = 0x10	off Output OUT02 binary plus switched PWM output current control binary plus switched with diagnosis binary plus switched with diagnosis + protection
	0x04	Configuration OUT03	rw	USINT	2	0 = 0x00 2 = 0x02 4 = 0x04 5 = 0x05 15 = 0x0F 16 = 0x10	off Output OUT03 binary plus switched PWM output current control binary plus switched with diagnosis binary plus switched with diagnosis + protection
	0x05	Configuration OUT04	rw	USINT	2	0 = 0x00 2 = 0x02 4 = 0x04 5 = 0x05 15 = 0x0F 16 = 0x10	off Output OUT04 binary plus switched PWM output current control binary plus switched with diagnosis binary plus switched with diagnosis + protection

Index	S-idx	Designation	Data type		Default	Details	
0x2000	0x06	Configuration OUT05	rw	USINT	2	0 = 0x00 2 = 0x02 4 = 0x04 5 = 0x05 15 = 0x0F 16 = 0x10	off Output OUT05 binary plus switched PWM output current control binary plus switched with diagnosis binary plus switched with diagnosis + protection
	0x07	Configuration OUT06	rw	USINT	2	0 = 0x00 2 = 0x02 4 = 0x04 5 = 0x05 15 = 0x0F 16 = 0x10	off Output OUT06 binary plus switched PWM output current control binary plus switched with diagnosis binary plus switched with diagnosis + protection
	0x08	Configuration OUT07	rw	USINT	2	0 = 0x00 2 = 0x02 4 = 0x04 5 = 0x05 15 = 0x0F 16 = 0x10	off Output OUT06 binary plus switched PWM output current control binary plus switched with diagnosis binary plus switched with diagnosis + protection
	0x09	Configuration OUT08	rw	USINT	2	0 = 0x00 2 = 0x02 4 = 0x04 15 = 0x0F	off Output OUT08 binary plus switched PWM output binary plus switched with diagnosis
	0x0A	Configuration OUT09	rw	USINT	2	0 = 0x00 2 = 0x02 4 = 0x04 15 = 0x0F	off Output OUT09 binary plus switched PWM output binary plus switched with diagnosis
	0x0B	Configuration OUT10	rw	USINT	2	0 = 0x00 2 = 0x02 4 = 0x04 15 = 0x0F	off Output OUT10 binary plus switched PWM output binary plus switched with diagnosis
	0x0C	Configuration OUT11	rw	USINT	2	0 = 0x00 2 = 0x02 4 = 0x04 15 = 0x0F	off Output OUT11 binary plus switched PWM output binary plus switched with diagnosis

Index	S-idx	Designation	Data type		Default	Details	
0x2000	0x0D	Configuration OUT12	rw	USINT	2	0 = 0x00 2 = 0x02 4 = 0x04 15 = 0x0F	off Output OUT12 binary plus switched PWM output binary plus switched with diagnosis
	0x0E	Configuration OUT13	rw	USINT	2	0 = 0x00 2 = 0x02 4 = 0x04 15 = 0x0F	off Output OUT13 binary plus switched PWM output binary plus switched with diagnosis
	0x0F	Configuration OUT14	rw	USINT	2	0 = 0x00 2 = 0x02 4 = 0x04 15 = 0x0F	off Output OUT14 binary plus switched PWM output binary plus switched with diagnosis
	0x10	Configuration OUT15	rw	USINT	2	0 = 0x00 2 = 0x02 4 = 0x04 15 = 0x0F	off Output OUT15 binary plus switched PWM output binary plus switched with diagnosis
0x2001	0x00	PWM frequency	ro	USINT	16	Largest sub-index supported	
	0x01	PWM frequency OUT00	rw	UINT	100	20…250	OUT00 PWM frequency [Hz]
	0x02	PWM frequency OUT01	rw	UINT	100	20…250	OUT01 PWM frequency [Hz]
	0x03	PWM frequency OUT02	rw	UINT	100	20…250	OUT02 PWM frequency [Hz]
	0x04	PWM frequency OUT03	rw	UINT	100	20…250	OUT03 PWM frequency [Hz]
	0x05	PWM frequency OUT04	rw	UINT	100	20…250	OUT04 PWM frequency [Hz]
	0x06	PWM frequency OUT05	rw	UINT	100	20…250	OUT05 PWM frequency [Hz]
	0x07	PWM frequency OUT06	rw	UINT	100	20…250	OUT06 PWM frequency [Hz]
	0x08	PWM frequency OUT07	rw	UINT	100	20…250	OUT07 PWM frequency [Hz]

Index	S-idx	Designation	Data type		Default	Details	
0x2001	0x09	PWM frequency OUT08	rw	UINT	100	20…250	OUT08 PWM frequency [Hz]
	0x0A	PWM frequency OUT09	rw	UINT	100	20…250	OUT09 PWM frequency [Hz]
	0x0B	PWM frequency OUT10	rw	UINT	100	20…250	OUT10 PWM frequency [Hz]
	0x0C	PWM frequency OUT11	rw	UINT	100	20…250	OUT11 PWM frequency [Hz]
	0x0D	PWM frequency OUT12	rw	UINT	100	20…250	OUT12 PWM frequency [Hz]
	0x0E	PWM frequency OUT13	rw	UINT	100	20…250	OUT13 PWM frequency [Hz]
	0x0F	PWM frequency OUT14	rw	UINT	100	20…250	OUT14 PWM frequency [Hz]
	0x10	PWM frequency OUT15	rw	UINT	100	20…250	OUT15 PWM frequency [Hz]
0x2002	0x00	Current value	ro	USINT	8	Largest sub-index supported	
	0x01	Current value OUT00	ro	UINT	0	20…4000	OUT00 output current [mA]
	0x02	Current value OUT01	ro	UINT	0	20…4000	OUT01 output current [mA]
	0x03	Current value OUT02	ro	UINT	0	20…4000	OUT02 output current [mA]
	0x04	Current value OUT03	ro	UINT	0	20…4000	OUT03 output current [mA]
	0x05	Current value OUT04	ro	UINT	0	20…2500	OUT04 output current [mA]
	0x06	Current value OUT05	ro	UINT	0	20…2500	OUT05 output current [mA]
	0x07	Current value OUT06	ro	UINT	0	20…2500	OUT06 output current [mA]
	0x08	Current value OUT07	ro	UINT	0	20…2500	OUT07 output current [mA]

Index	S-idx	Designation	Data type		Default	Details	
0x2004	0x00	P-value	ro	USINT	8	Largest sub-index supported	
	0x01	P-value OUT00	rw	USINT	30	0…255	OUT00 P-value for current control
	0x02	P-value OUT01	rw	USINT	30	0…255	OUT01 P-value for current control
	0x03	P-value OUT02	rw	USINT	30	0…255	OUT02 P-value for current control
	0x04	P-value OUT03	rw	USINT	30	0…255	OUT03 P-value for current control
	0x05	P-value OUT04	rw	USINT	30	0…255	OUT04 P-value for current control
	0x06	P-value OUT05	rw	USINT	30	0…255	OUT05 P-value for current control
	0x07	P-value OUT06	rw	USINT	30	0…255	OUT06 P-value for current control
	0x08	P-value OUT07	rw	USINT	30	0…255	OUT07 P-value for current control
0x2005	0x00	I-value	ro	USINT	8	Largest sub-index supported	
	0x01	I-value OUT00	rw	USINT	20	0…255	OUT00 I-value for current control
	0x02	I-value OUT01	rw	USINT	20	0…255	OUT01 I-value for current control
	0x03	I-value OUT02	rw	USINT	20	0…255	OUT02 I-value for current control
	0x04	I-value OUT03	rw	USINT	20	0…255	OUT03 I-value for current control
	0x05	I-value OUT04	rw	USINT	20	0…255	OUT04 I-value for current control
	0x06	I-value OUT05	rw	USINT	20	0…255	OUT05 I-value for current control
	0x07	I-value OUT06	rw	USINT	20	0…255	OUT06 I-value for current control
	0x08	I-value OUT07	rw	USINT	20	0…255	OUT07 I-value for current control
0x2006	0x00	PWM dither frequency	ro	USINT	16	Largest sub-index supported	
	0x01	PWM dither frequency OUT00	rw	UINT	0	0…PWM-freq / 2	OUT00 PWM dither frequency [Hz]
	0x02	PWM dither frequency OUT01	rw	UINT	0	0…PWM-freq / 2	OUT01 PWM dither frequency [Hz]

Index	S-idx	Designation	Data type		Default	Details	
0x2006	0x03	PWM dither frequency OUT02	rw	UINT	0	0…PWM-freq / 2	OUT02 PWM dither frequency [Hz]
	0x04	PWM dither frequency OUT03	rw	UINT	0	0…PWM-freq / 2	OUT03 PWM dither frequency [Hz]
	0x05	PWM dither frequency OUT04	rw	UINT	0	0…PWM-freq / 2	OUT04 PWM dither frequency [Hz]
	0x06	PWM dither frequency OUT05	rw	UINT	0	0…PWM-freq / 2	OUT05 PWM dither frequency [Hz]
	0x07	PWM dither frequency OUT06	rw	UINT	0	0…PWM-freq / 2	OUT06 PWM dither frequency [Hz]
	0x08	PWM dither frequency OUT07	rw	UINT	0	0…PWM-freq / 2	OUT07 PWM dither frequency [Hz]
	0x09	PWM dither frequency OUT08	rw	UINT	0	0…PWM-freq / 2	OUT08 PWM dither frequency [Hz]
	0x0A	PWM dither frequency OUT09	rw	UINT	0	0…PWM-freq / 2	OUT09 PWM dither frequency [Hz]
	0x0B	PWM dither frequency OUT10	rw	UINT	0	0…PWM-freq / 2	OUT10 PWM dither frequency [Hz]
	0x0C	PWM dither frequency OUT11	rw	UINT	0	0…PWM-freq / 2	OUT11 PWM dither frequency [Hz]
	0x0D	PWM dither frequency OUT12	rw	UINT	0	0…PWM-freq / 2	OUT12 PWM dither frequency [Hz]
	0x0E	PWM dither frequency OUT13	rw	UINT	0	0…PWM-freq / 2	OUT13 PWM dither frequency [Hz]
	0x0F	PWM dither frequency OUT14	rw	UINT	0	0…PWM-freq / 2	OUT14 PWM dither frequency [Hz]
	0x10	PWM dither frequency OUT15	rw	UINT	0	0…PWM-freq / 2	OUT15 PWM dither frequency [Hz]

Index	S-idx	Designation	Data type		Default	Details	
0x2007	0x00	PWM dither value	ro	USINT	16	Largest sub-index supported	
	0x01	PWM dither value OUT00	rw	UINT	0	0…1 000	OUT00 PWM dither value [‰]
	0x02	PWM dither value OUT01	rw	UINT	0	0…1 000	OUT01 PWM dither value [‰]
	0x03	PWM dither value OUT02	rw	UINT	0	0…1 000	OUT02 PWM dither value [‰]
	0x04	PWM dither value OUT03	rw	UINT	0	0…1 000	OUT03 PWM dither value [‰]
	0x05	PWM dither value OUT04	rw	UINT	0	0…1 000	OUT04 PWM dither value [‰]
	0x06	PWM dither value OUT05	rw	UINT	0	0…1 000	OUT05 PWM dither value [‰]
	0x07	PWM dither value OUT06	rw	UINT	0	0…1 000	OUT06 PWM dither value [‰]
	0x08	PWM dither value OUT07	rw	UINT	0	0…1 000	OUT07 PWM dither value [‰]
	0x09	PWM dither value OUT08	rw	UINT	0	0…1 000	OUT08 PWM dither value [‰]
	0x0A	PWM dither value OUT09	rw	UINT	0	0…1 000	OUT09 PWM dither value [‰]
	0x0B	PWM dither value OUT10	rw	UINT	0	0…1 000	OUT10 PWM dither value [‰]
	0x0C	PWM dither value OUT11	rw	UINT	0	0…1 000	OUT11 PWM dither value [‰]
	0x0D	PWM dither value OUT12	rw	UINT	0	0…1 000	OUT12 PWM dither value [‰]
	0x0E	PWM dither value OUT13	rw	UINT	0	0…1 000	OUT13 PWM dither value [‰]
	0x0F	PWM dither value OUT14	rw	UINT	0	0…1 000	OUT14 PWM dither value [‰]
	0x10	PWM dither value OUT15	rw	UINT	0	0…1 000	OUT15 PWM dither value [‰]

Index	S-idx	Designation	Data type		Default	Details	
0x2022	0x00	Output – short circuit	ro	USINT	2	Largest sub-index supported	
	0x01	Short circuit OUT00… OUT07	ro	USINT	0	0 = normal 1 = short circuit	channels (bit coded) 0b---- ---X = OUT00 0b---- --X- = OUT01 0b---- -X-- = OUT02 0b---- X--- = OUT03 0b---X ---- = OUT04 0b--X- ---- = OUT05 0b-X-- ---- = OUT06 0bX--- ---- = OUT07
	0x02	Short circuit OUT08… OUT15	ro	USINT	0	0 = normal 1 = short circuit	channels (bit coded) 0b---- ---X = OUT08 0b---- --X- = OUT09 0b---- -X-- = OUT10 0b---- X--- = OUT11 0b---X ---- = OUT12 0b--X- ---- = OUT13 0b-X-- ---- = OUT14 0bX--- ---- = OUT15
0x2023	0x00	Output – open circuit	ro	USINT	2	Largest sub-index supported	
	0x01	Open circuit OUT00… OUT07	ro	USINT	0	0 = normal 1 = open circuit	channels (bit coded) 0b---- ---X = OUT00 0b---- --X- = OUT01 0b---- -X-- = OUT02 0b---- X--- = OUT03 0b---X ---- = OUT04 0b--X- ---- = OUT05 0b-X-- ---- = OUT06 0bX--- ---- = OUT07
	0x02	Open circuit OUT08… OUT15	ro	USINT	0	0 = normal 1 = open circuit	channels (bit coded) 0b---- ---X = OUT08 0b---- --X- = OUT09 0b---- -X-- = OUT10 0b---- X--- = OUT11 0b---X ---- = OUT12 0b--X- ---- = OUT13 0b-X-- ---- = OUT14 0bX--- ---- = OUT15
0x2024	0x00	Output – overload	ro	USINT	1	Largest sub-index supported	
	0x01	Overload OUT00… OUT07	ro	USINT	0	0 = normal 1 = overload	channels (bit coded) 0b---- ---X = OUT00 0b---- --X- = OUT01 0b---- -X-- = OUT02 0b---- X--- = OUT03 0b---X ---- = OUT04 0b--X- ---- = OUT05 0b-X-- ---- = OUT06 0bX--- ---- = OUT07

Index	S-idx	Designation	Data type		Default	Details	
0x2040	0x00	System supply voltage VBBS	ro	USINT	1	Largest sub-index supported	
	0x01	VBBS	ro	USINT	0	VBBS voltage [mV]	
0x2041	0x00	Output supply voltage	ro	USINT	2	Largest sub-index supported	
	0x01	VBB1	ro	UINT	0	VBB1 voltage [mV]	
	0x02	VBB2	ro	UINT	0	VBB2 voltage [mV]	
0x2050		Device temperature	ro	UINT	0	temperature [°C]	
0x20F0		Node ID	rw	USINT	125	1…125	node ID [!] value(0x20F0) != value(20F1)
0x20F1		Node ID	rw	USINT	125	1…125	node ID [!] value(0x20F0) != value(20F1)
0x20F2		Baud rate	rw	USINT	3	baud rate [!] value(0x20F2) != value(20F3)	
						0	1000 kBit/s
						1	800 kBit/s
						2	500 kBit/s
						3	250 kBit/s
						4	125 kBit/s
						5	100 kBit/s
						6	50 kBit/s
						7	20 kBit/s
0x20F3		Baud rate	rw	USINT	3	baud rate [!] value(0x20F2) != value(20F3)	
0x20F4		Autostart	rw	UINT	0	not used	
0x20F5		Lock edit mode	rw	USINT	0	0 = edit mode unlocked 1 = edit mode locked	
0x20F6		CAN interface	rw	USINT	1	1...2	CAN interface [!] value(0x20F6) != value(20F7)
0x20F7		CAN interface	rw	USINT	1	1...2	CAN interface [!] value(0x20F6) != value(20F7)

Index	S-idx	Designation	Data type		Default	Details
0x6200	0x00	Binary output Largest sub-index supported	ro	USINT	2	Binary outputs Largest supported sub-index = 2
	0x01	Binary outputs OUT00 - OUT07	wo	USINT	0	Binary outputs OUT00…OUT07 0b---- ---X = OUT00 0b---- --X- = OUT01 0b---- -X-- = OUT02 0b---- X--- = OUT03 0b---X ---- = OUT04 0b--X- ---- = OUT05 0b-X-- ---- = OUT06 0bX--- ---- = OUT07
	0x02	Binary outputs OUT08 - OUT15	wo	USINT	0	Binary outputs OUT08…OUT15 0b---- ---X = OUT08 0b---- --X- = OUT09 0b---- -X-- = OUT10 0b---- X--- = OUT11 0b---X ---- = OUT12 0b--X- ---- = OUT13 0b-X-- ---- = OUT14 0bX--- ---- = OUT15

Index	S-idx	Designation	Data type		Default	Details
0x6414	0x00	PWM output Largest sub-index supported	ro	USINT	16	PWM outputs Largest supported sub-index = 16
	0x01	PWM output OUT00	wo	UINT	--	Value for PWM output OUT00
	0x02	PWM output OUT01	wo	UINT	--	Value for PWM output OUT01
	0x03	PWM output OUT02	wo	UINT	--	Value for PWM output OUT02
	0x04	PWM output OUT03	wo	UINT	--	Value for PWM output OUT03
	0x05	PWM output OUT04	wo	UINT	--	Value for PWM output OUT04
	0x06	PWM output OUT05	wo	UINT	--	Value for PWM output OUT05
	0x07	PWM output OUT06	wo	UINT	--	Value for PWM output OUT06
	0x08	PWM output OUT07	wo	UINT	--	Value for PWM output OUT07
	0x09	PWM output OUT08	wo	UINT	--	Value for PWM output OUT08
	0x0A	PWM output OUT09	wo	UINT	--	Value for PWM output OUT09
	0x0B	PWM output OUT10	wo	UINT	--	Value for PWM output OUT10
	0x0C	PWM output OUT11	wo	UINT	--	Value for PWM output OUT11
	0x0D	PWM output OUT12	wo	UINT	--	Value for PWM output OUT12
	0x0E	PWM output OUT13	wo	UINT	--	Value for PWM output OUT13
	0x0F	PWM output OUT14	wo	UINT	--	Value for PWM output OUT14
	0x10	PWM output OUT15	wo	UINT	--	Value for PWM output OUT15

12.2.3 Device-specific CR2042

Receive PDO communication parameters (index 0x1400…0x14FF):

Index	S-idx	Designation	Data type		Default	Details
0x1400	0x00	Receive PDO Communication Parameter Number of entries	ro	USINT	0x02	Receive PDO 1: binary outputs 0 - 7 number of entries = 2
	0x01	COBID used by PDO	rw	UDINT	0x200 + node ID	CAN ID of the first read PDO Bit 31 = 0 → PDO is valid Bit 31 = 1 → PDO is not valid
	0x02	transmission type	rw	USINT	0x01	0x00 = synch acyclic 0x01...0xF0 = synch cyclic; outputs are only updated after „n" synch objects n = 1…240 = 0x01...0xF0 0xFC/0xFD not implemented 0xFE = asynch man. spec. event; outputs are updated immediately 0xFF = asynch device profile event; outputs are updated immediately
0x1401	0x00	Receive PDO Communication Parameter Number of entries	ro	USINT	0x02	Receive PDO 2: PWM outputs 0 - 3 number of entries = 2
	0x01	COBID used by PDO	rw	UDINT	0x300 + node ID	CAN ID of the second read PDO Bit 31 = 0 → PDO is valid Bit 31 = 1 → PDO is not valid
	0x02	transmission type	rw	USINT	0x01	0x00 = synch acyclic 0x01...0xF0 = synch cyclic; outputs are only updated after „n" synch objects n = 1…240 = 0x01...0xF0 0xFC/0xFD not implemented 0xFE = asynch man. spec. event; outputs are updated immediately 0xFF = asynch device profile event; outputs are updated immediately

Index	S-idx	Designation	Data type		Default	Details
0x1402	0x00	Receive PDO Communication Parameter Number of entries	ro	USINT	0x02	Receive PDO 3: PWM outputs 4 - 7 number of entries = 2
	0x01	COBID used by PDO	rw	UDINT	0x400 + node ID	CAN-ID of the 3. read PDO Bit 31 = 0 → PDO is valid Bit 31 = 1 → PDO is not valid
	0x02	transmission type	rw	USINT	0x01	0x00 = synch acyclic 0x01...0xF0 = synch cyclic; outputs are only updated after „n" synch objects n = 1…240 = 0x01...0xF0 0xFC/0xFD not implemented 0xFE = asynch man. spec. event; outputs are updated immediately 0xFF = asynch device profile event; outputs are updated immediately

Receive PDO mapping (index 0x1600…0x16FF):

Index	S-idx	Designation	Data type		Default	Details
0x1600	0x00	Receive PDO mapping Number of mapped objects in PDO	rw	USINT	0x01	Mapping read PDO 1: binary outputs
	0x01	PDO mapping	ro	UDINT	0x6200 0108	1 byte in index 0x6200, SubIndex 01 Binary outputs OUT00…OUT07 0b---- ---X = OUT00 0b---- --X- = OUT01 0b---- -X-- = OUT02 0b---- X--- = OUT03 0b---X ---- = OUT04 0b--X- ---- = OUT05 0b-X-- ---- = OUT06 0bX--- ---- = OUT07

Index	S-idx	Designation	Data type		Default	Details
0x1601	0x00	Receive PDO mapping Number of mapped objects in PDO	rw	USINT	0x04	Mapping read PDO 2: PWM outputs OUT00…OUT03 number of integrated application objects = 4
	0x01	PDO mapping	rw	UDINT	0x6414 0110	PWM/current output OUT00 Index 0x6414, SubIndex 0x01 contains the preset value of the PWM output OUT00, the value is interpreted as duty cycle in ‰ or as target current value (depending on the configuration index 0x2000)
	0x02	PDO mapping	rw	UDINT	0x6414 0210	PWM/ current output OUT01 Index 0x6414, SubIndex 0x02 contains the preset value of the PWM output OUT01, the value is interpreted as duty cycle in ‰ or as target current value (depending on the configuration index 0x2000)
	0x03	PDO mapping	rw	UDINT	0x6414 0310	PWM/ current output OUT02 Index 0x6414, SubIndex 0x03 contains the preset value of the PWM output OUT02, the value is interpreted as duty cycle in ‰ or as target current value (depending on the configuration index 0x2000)
	0x04	PDO mapping	rw	UDINT	0x6414 0410	PWM/ current output OUT03 Index 0x6414, SubIndex 0x04 contains the preset value of the PWM output OUT03, the value is interpreted as duty cycle in ‰ or as target current value (depending on the configuration index 0x2000)

Index	S-idx	Designation	Data type		Default	Details
0x1602	0x00	Receive PDO mapping Number of mapped objects in PDO	rw	USINT	0x04	Mapping read PDO 3: PWM outputs OUT04…OUT07 number of integrated application objects = 4
	0x01	PDO mapping	rw	UDINT	0x6414 0510	PWM/ current output OUT04 Index 0x6414, SubIndex 0x05 contains the preset value of the PWM output OUT04, the value is interpreted as duty cycle in ‰ or as target current value (depending on the configuration index 0x2000)
	0x02	PDO mapping	rw	UDINT	0x6414 0610	PWM/ current output OUT05 Index 0x6414, SubIndex 0x06 contains the preset value of the PWM output OUT05, the value is interpreted as duty cycle in ‰ or as target current value (depending on the configuration index 0x2000)
	0x03	PDO mapping	rw	UDINT	0x6414 0710	PWM/ current output OUT06 Index 0x6414, SubIndex 0x07 contains the preset value of the PWM output OUT06, the value is interpreted as duty cycle in ‰ or as target current value (depending on the configuration index 0x2000)
	0x04	PDO mapping	rw	UDINT	0x6414 0810	PWM/ current output OUT07 Index 0x6414, SubIndex 0x08 contains the preset value of the PWM output OUT07, the value is interpreted as duty cycle in ‰ or as target current value (depending on the configuration index 0x2000)

Transmit PDO communication parameters (index 0x1800…0x18FF):

Index	S-idx	Designation	Data type		Default	Details
0x1800	0x00	Transmit PDO Communication Parameter Number of entries	ro	USINT	0x05	Configuration transmit PDO 1 number of entries = 5
	0x01	COBID used by PDO	rw	UDINT	0x180 + Node ID	CAN ID of the transmit PDO 1 Bit 31 = 0 → PDO is valid Bit 31 = 1 → PDO is not valid
	0x02	transmission type	rw	USINT	0x01	0x00 = synch acyclic 0x01...0xF0 = synch cyclic; values are only transmitted after „n" synch objects n = 1…240 = 0x01...0xF0 0xFC/0xFD not implemented 0xFE = asynch man. spec. event; values are immediately transferred 0xFF = asynch device profile event; values are immediately transferred
	0x03	inhibit time	rw	UINT	0	delay time in the transmission type "asynch" before the PDO is transmitted again at the earliest. (0...65535 • 100 µs)
	0x04	reserved	rw	USINT	0	reserve
	0x05	event time	rw	UINT	0	max. transfer break in the transmission type „asynch" (0...65535 ms) When this time has elapsed, the PDO is transferred even if the appl. event has not accured.

Index	S-idx	Designation	Data type		Default	Details
0x1801	0x00	Transmit PDO Communication Parameter Number of entries	ro	USINT	0x05	Configuration transmit PDO 2 number of entries = 5
	0x01	COBID used by PDO	rw	UDINT	0x280 + Node ID	CAN ID of the transmit PDO 2 Bit 31 = 0 → PDO is valid Bit 31 = 1 → PDO is not valid
	0x02	transmission type	rw	USINT	0x01	0x00 = synch acyclic 0x01...0xF0 = synch cyclic; values are only transmitted after „n" synch objects n = 1…240 = 0x01...0xF0 0xFC/0xFD not implemented 0xFE = asynch man. spec. event; values are immediately transferred 0xFF = asynch device profile event; values are immediately transferred
	0x03	inhibit time	rw	UINT	0	delay time in the transmission type "asynch" before the PDO is transmitted again at the earliest. (0...65535 • 100 µs)
	0x04	reserved	rw	USINT	0	reserve
	0x05	event time	rw	UINT	0	max. transfer break in the transmission type „asynch" (0...65535 ms) When this time has elapsed, the PDO is transferred even if the appl. event has not accured.

Index	S-idx	Designation	Data type		Default	Details
0x1802	0x00	Transmit PDO Communication Parameter Number of entries	ro	USINT	0x05	Configuration transmit PDO 3 number of entries = 5
	0x01	COBID used by PDO	rw	UDINT	0x380 + Node ID	CAN ID of the transmit PDO 3 Bit 31 = 0 → PDO is valid Bit 31 = 1 → PDO is not valid
	0x02	transmission type	rw	USINT	0x01	0x00 = synch acyclic 0x01...0xF0 = synch cyclic; values are only transmitted after „n" synch objects n = 1…240 = 0x01...0xF0 0xFC/0xFD not implemented 0xFE = asynch man. spec. event; values are immediately transferred 0xFF = asynch device profile event; values are immediately transferred
	0x03	inhibit time	rw	UINT	0	delay time in the transmission type "asynch" before the PDO is transmitted again at the earliest. (0...65535 • 100 µs)
	0x04	reserved	rw	USINT	0	reserve
	0x05	event time	rw	UINT	0	max. transfer break in the transmission type „asynch" (0...65535 ms) When this time has elapsed, the PDO is transferred even if the appl. event has not accured.

Index	S-idx	Designation	Data type		Default	Details
0x1803	0x00	Transmit PDO Communication Parameter Number of entries	ro	USINT	0x05	Configuration transmit PDO 4 number of entries = 5
	0x01	COBID used by PDO	rw	UDINT	0x480 + Node ID	CAN ID of the transmit PDO 4 Bit 31 = 0 → PDO is valid Bit 31 = 1 → PDO is not valid
	0x02	transmission type	rw	USINT	0x01	0x00 = synch acyclic 0x01...0xF0 = synch cyclic; values are only transmitted after „n" synch objects n = 1…240 = 0x01...0xF0 0xFC/0xFD not implemented 0xFE = asynch man. spec. event; values are immediately transferred 0xFF = asynch device profile event; values are immediately transferred
	0x03	inhibit time	rw	UINT	0	delay time in the transmission type "asynch" before the PDO is transmitted again at the earliest. (0...65535 • 100 µs)
	0x04	reserved	rw	USINT	0	reserve
	0x05	event time	rw	UINT	0	max. transfer break in the transmission type „asynch" (0...65535 ms) When this time has elapsed, the PDO is transferred even if the appl. event has not accured.

Index	S-idx	Designation	Data type		Default	Details
0x1804	0x00	Transmit PDO Communication Parameter Number of entries	ro	USINT	0x05	Configuration transmit PDO 5 number of entries = 5
	0x01	COBID used by PDO	rw	UDINT	0x181 + Node ID	CAN ID of the transmit PDO 5 Bit 31 = 0 → PDO is valid Bit 31 = 1 → PDO is not valid
	0x02	transmission type	rw	USINT	0x01	0x00 = synch acyclic 0x01...0xF0 = synch cyclic; values are only transmitted after „n" synch objects n = 1…240 = 0x01...0xF0 0xFC/0xFD not implemented 0xFE = asynch man. spec. event; values are immediately transferred 0xFF = asynch device profile event; values are immediately transferred
	0x03	inhibit time	rw	UINT	0	delay time in the transmission type "asynch" before the PDO is transmitted again at the earliest. (0...65535 • 100 µs)
	0x04	reserved	rw	USINT	0	reserve
	0x05	event time	rw	UINT	0	max. transfer break in the transmission type „asynch" (0...65535 ms) When this time has elapsed, the PDO is transferred even if the appl. event has not accured.

Index	S-idx	Designation	Data type		Default	Details
0x1805	0x00	Transmit PDO Communication Parameter Number of entries	ro	USINT	0x05	Configuration transmit PDO 6 number of entries = 5
	0x01	COBID used by PDO	rw	UDINT	0x281 + Node ID	CAN ID of the transmit PDO 6 Bit 31 = 0 → PDO is valid Bit 31 = 1 → PDO is not valid
	0x02	transmission type	rw	USINT	0x01	0x00 = synch acyclic 0x01...0xF0 = synch cyclic; values are only transmitted after „n" synch objects n = 1…240 = 0x01...0xF0 0xFC/0xFD not implemented 0xFE = asynch man. spec. event; values are immediately transferred 0xFF = asynch device profile event; values are immediately transferred
	0x03	inhibit time	rw	UINT	0	delay time in the transmission type "asynch" before the PDO is transmitted again at the earliest. (0...65535 • 100 µs)
	0x04	reserved	rw	USINT	0	reserve
	0x05	event time	rw	UINT	0	max. transfer break in the transmission type „asynch" (0...65535 ms) When this time has elapsed, the PDO is transferred even if the appl. event has not accured.

Index	S-idx	Designation	Data type		Default	Details
0x1806	0x00	Transmit PDO Communication Parameter Number of entries	ro	USINT	0x05	Configuration transmit PDO 7 number of entries = 5
	0x01	COBID used by PDO	rw	UDINT	0x381 + Node ID	CAN ID of the transmit PDO 7 Bit 31 = 0 → PDO is valid Bit 31 = 1 → PDO is not valid
	0x02	transmission type	rw	USINT	0x01	0x00 = synch acyclic 0x01...0xF0 = synch cyclic; values are only transmitted after „n" synch objects n = 1…240 = 0x01...0xF0 0xFC/0xFD not implemented 0xFE = asynch man. spec. event; values are immediately transferred 0xFF = asynch device profile event; values are immediately transferred
	0x03	inhibit time	rw	UINT	0	delay time in the transmission type "asynch" before the PDO is transmitted again at the earliest. (0...65535 • 100 µs)
	0x04	reserved	rw	USINT	0	reserve
	0x05	event time	rw	UINT	0	max. transfer break in the transmission type „asynch" (0...65535 ms) When this time has elapsed, the PDO is transferred even if the appl. event has not accured.

Index	S-idx	Designation	Data type		Default	Details
0x1807	0x00	Transmit PDO Communication Parameter Number of entries	ro	USINT	0x05	Configuration transmit PDO 8 number of entries = 5
	0x01	COBID used by PDO	rw	UDINT	0x481 + Node ID	CAN ID of the transmit PDO 8 Bit 31 = 0 → PDO is valid Bit 31 = 1 → PDO is not valid
	0x02	transmission type	rw	USINT	0x01	0x00 = synch acyclic 0x01...0xF0 = synch cyclic; values are only transmitted after „n" synch objects n = 1…240 = 0x01...0xF0 0xFC/0xFD not implemented 0xFE = asynch man. spec. event; values are immediately transferred 0xFF = asynch device profile event; values are immediately transferred
	0x03	inhibit time	rw	UINT	0	delay time in the transmission type "asynch" before the PDO is transmitted again at the earliest. (0...65535 • 100 µs)
	0x04	reserved	rw	USINT	0	reserve
	0x05	event time	rw	UINT	0	max. transfer break in the transmission type „asynch" (0...65535 ms) When this time has elapsed, the PDO is transferred even if the appl. event has not accured.

Index	S-idx	Designation	Data type		Default	Details
0x1808	0x00	Transmit PDO Communication Parameter Number of entries	ro	USINT	0x05	Configuration transmit PDO 9 number of entries = 5
	0x01	COBID used by PDO	rw	UDINT	0x182 + Node ID	CAN ID of the transmit PDO 9 Bit 31 = 0 → PDO is valid Bit 31 = 1 → PDO is not valid
	0x02	transmission type	rw	USINT	0x01	0x00 = synch acyclic 0x01...0xF0 = synch cyclic; values are only transmitted after „n" synch objects n = 1…240 = 0x01...0xF0 0xFC/0xFD not implemented 0xFE = asynch man. spec. event; values are immediately transferred 0xFF = asynch device profile event; values are immediately transferred
	0x03	inhibit time	rw	UINT	0	delay time in the transmission type "asynch" before the PDO is transmitted again at the earliest. (0...65535 • 100 µs)
	0x04	reserved	rw	USINT	0	reserve
	0x05	event time	rw	UINT	0	max. transfer break in the transmission type „asynch" (0...65535 ms) When this time has elapsed, the PDO is transferred even if the appl. event has not accured.

Index	S-idx	Designation	Data type		Default	Details
0x1809	0x00	Transmit PDO Communication Parameter Number of entries	ro	USINT	0x05	Configuration transmit PDO 10 number of entries = 5
	0x01	COBID used by PDO	rw	UDINT	0x282 + Node ID	CAN ID of the transmit PDO 10 Bit 31 = 0 → PDO is valid Bit 31 = 1 → PDO is not valid
	0x02	transmission type	rw	USINT	0x01	0x00 = synch acyclic 0x01...0xF0 = synch cyclic; values are only transmitted after „n" synch objects n = 1…240 = 0x01...0xF0 0xFC/0xFD not implemented 0xFE = asynch man. spec. event; values are immediately transferred 0xFF = asynch device profile event; values are immediately transferred
	0x03	inhibit time	rw	UINT	0	delay time in the transmission type "asynch" before the PDO is transmitted again at the earliest. (0...65535 • 100 µs)
	0x04	reserved	rw	USINT	0	reserve
	0x05	event time	rw	UINT	0	max. transfer break in the transmission type „asynch" (0...65535 ms) When this time has elapsed, the PDO is transferred even if the appl. event has not accured.

Index	S-idx	Designation	Data type		Default	Details
0x180A	0x00	Transmit PDO Communication Parameter Number of entries	ro	USINT	0x05	Configuration transmit PDO 11 number of entries = 5
	0x01	COBID used by PDO	rw	UDINT	0x382 + Node ID	CAN ID of the transmit PDO 11 Bit 31 = 0 → PDO is valid Bit 31 = 1 → PDO is not valid
	0x02	transmission type	rw	USINT	0x01	0x00 = synch acyclic 0x01...0xF0 = synch cyclic; values are only transmitted after „n" synch objects n = 1…240 = 0x01...0xF0 0xFC/0xFD not implemented 0xFE = asynch man. spec. event; values are immediately transferred 0xFF = asynch device profile event; values are immediately transferred
	0x03	inhibit time	rw	UINT	0	delay time in the transmission type "asynch" before the PDO is transmitted again at the earliest. (0...65535 • 100 µs)
	0x04	reserved	rw	USINT	0	reserve
	0x05	event time	rw	UINT	0	max. transfer break in the transmission type „asynch" (0...65535 ms) When this time has elapsed, the PDO is transferred even if the appl. event has not accured.

Transmit PDO mapping (index 0x1A00…0x1AFF):

Index	S-idx	Designation	Data type		Default	Details
0x1A00	0x00	Transmit PDO mapping Number of mapped objects in PDO	rw	USINT	0x07	mapping transmit PDO 1 number of integrated application objects = 7
	0x01	PDO mapping	rw	UDINT	0x6000 0108	Index 0x6000, SubIndex 0x01 binary inputs 00...07: actual values (bit coded)
	0x02	PDO mapping	rw	UDINT	0x2020 0108	Index 0x2020, SubIndex 0x01 binary inputs 00...07: flag "short circuit" (bit coded)
	0x03	PDO mapping	rw	UDINT	0x2021 0108	Index 0x2021, SubIndex 0x01 binary inputs 00...07: flag "wire break" (bit coded)
	0x04	PDO mapping	rw	UDINT	0x2025 0108	Index 0x2025, SubIndex 0x01 inputs 00, 01, 02 und 03: flag "overload" (bit coded)
	0x05	PDO mapping	rw	UDINT	0x2022 0108	Index 0x2022, SubIndex 0x01 outputs 00...07: flag " short circuit " (bit coded)
	0x06	PDO mapping	rw	UDINT	0x2023 0108	Index 0x2023, SubIndex 0x01 outputs 00...07: flag " wire break " (bit coded)
	0x07	PDO mapping	rw	UDINT	0x2024 0108	Index 0x2024, SubIndex 0x01 outputs 00...07: flag " overload " (bit coded)

Index	S-idx	Designation	Data type		Default	Details
0x1A01	0x00	Transmit PDO mapping Number of mapped objects in PDO	rw	USINT	0x04	mapping transmit PDO 2 (analogue inputs) number of integrated application objects = 4
	0x01	PDO mapping	rw	UDINT	0x6404 0110	Index 0x6404, SubIndex 0x01 analogue input 00: actual value (depending on the configuration 0x2000)
	0x02	PDO mapping	rw	UDINT	0x6404 0210	Index 0x6404, SubIndex 0x02 analogue input 01: actual value (depending on the configuration 0x2000))
	0x03	PDO mapping	rw	UDINT	0x6404 0310	Index 0x6404, SubIndex 0x03 analogue input 02: actual value (depending on the configuration 0x2000)
	0x04	PDO mapping	rw	UDINT	0x6404 0410	Index 0x6404, SubIndex 0x04 analogue input 03: actual value (depending on the configuration 0x2000)
0x1A02	0x00	Transmit PDO mapping Number of mapped objects in PDO	rw	USINT	0x04	mapping transmit PDO 3 number of integrated application objects = 4
	0x01	PDO mapping	rw	UDINT	0x2030 0110	Index 0x2030, SubIndex 0x01 input 04: actual resistor value
	0x02	PDO mapping	rw	UDINT	0x2030 0210	Index 0x2030, SubIndex 0x02 input 05: actual resistor value
	0x03	PDO mapping	rw	UDINT	0x2030 0310	Index 0x2030, SubIndex 0x03 input 06: actual resistor value
	0x04	PDO mapping	rw	UDINT	0x2030 0410	Index 0x2030, SubIndex 0x04 input 07: actual resistor value

Index	S-idx	Designation	Data type		Default	Details
0x1A03	0x00	Transmit PDO mapping Number of mapped objects in PDO	rw	USINT	0x02	mapping transmit PDO 4 (periode time IN00...IN01) number of integrated application objects = 2
	0x01	PDO mapping	rw	UDINT	0x2012 0120	Index 0x2012, SubIndex 0x01 frequency input IN00: periode time of the signal
	0x02	PDO mapping	rw	UDINT	0x2012 0220	Index 0x2012, SubIndex 0x02 frequency input IN01: periode time of the signal
0x1A04	0x00	Transmit PDO mapping Number of mapped objects in PDO	rw	USINT	0x02	mapping transmit PDO 5 (periode time IN02...IN03) number of integrated application objects = 2
	0x01	PDO mapping	rw	UDINT	0x2012 0320	Index 0x2012, SubIndex 0x03 frequency input IN02: periode time of the signal
	0x02	PDO mapping	rw	UDINT	0x2012 0420	Index 0x2012, SubIndex 0x04 frequency input IN03: periode time of the signal
0x1A05	0x00	Transmit PDO mapping Number of mapped objects in PDO	rw	USINT	0x04	mapping transmit PDO 6 (duty cycle of the signal on the frequency input IN00, IN01, IN02, IN03) number of integrated application objects = 4
	0x01	PDO mapping	rw	UDINT	0x2014 0110	Index 0x2014, SubIndex 0x01 frequency input IN00: duty cycle of the signal in ‰
	0x02	PDO mapping	rw	UDINT	0x2014 0210	Index 0x2014, SubIndex 0x02 frequency input IN01: duty cycle of the signal in ‰
	0x03	PDO mapping	rw	UDINT	0x2014 0310	Index 0x2014, SubIndex 0x03 frequency input IN02: duty cycle of the signal in ‰
	0x04	PDO mapping	rw	UDINT	0x2014 0410	Index 0x2014, SubIndex 0x04 frequency input IN03: duty cycle of the signal in ‰

Index	S-idx	Designation	Data type		Default	Details
0x1A06	0x00	Transmit PDO mapping Number of mapped objects in PDO	rw	USINT	0x02	mapping transmit PDO 7 (frequency on IN00...IN01) number of integrated application objects = 2
	0x01	PDO mapping	rw	UDINT	0x2015 0120	Index 0x2015, SubIndex 0x01 frequency input IN00: frequency value of the signal in Hz
	0x02	PDO mapping	rw	UDINT	0x2015 0220	Index 0x2015, SubIndex 0x02 frequency input IN01: frequency value of the signal in Hz
0x1A07	0x00	Transmit PDO mapping Number of mapped objects in PDO	rw	USINT	0x02	mapping transmit PDO 8 (frequency on IN02...IN03) number of integrated application objects = 2
	0x01	PDO mapping	rw	UDINT	0x2015 0320	Index 0x2015, SubIndex 0x03 frequency input IN02: frequency value of the signal in Hz
	0x02	PDO mapping	rw	UDINT	0x2015 0420	Index 0x2015, SubIndex 0x04 frequency input IN03: frequency value of the signal in Hz
0x1A08	0x00	Transmit PDO mapping Number of mapped objects in PDO	rw	USINT	0x04	mapping transmit PDO 9 (output current OUT00...OUT03) number of integrated application objects = 4
	0x01	PDO mapping	rw	UDINT	0x2002 0110	Index 0x2002, SubIndex 0x01 current on output OUT00
	0x02	PDO mapping	rw	UDINT	0x2002 0210	Index 0x2002, SubIndex 0x02 current on output OUT01
	0x03	PDO mapping	rw	UDINT	0x2002 0310	Index 0x2002, SubIndex 0x03 current on output OUT02
	0x04	PDO mapping	rw	UDINT	0x2002 0410	Index 0x2002, SubIndex 0x04 current on output OUT03

Index	S-idx	Designation	Data type		Default	Details
0x1A09	0x00	Transmit PDO mapping Number of mapped objects in PDO	rw	USINT	0x04	mapping transmit PDO 10 (output current OUT04...OUT07) number of integrated application objects = 4
	0x01	PDO mapping	rw	UDINT	0x2002 0510	Index 0x2002, SubIndex 0x05 current on output OUT04
	0x02	PDO mapping	rw	UDINT	0x2002 0610	Index 0x2002, SubIndex 0x06 current on output OUT05
	0x03	PDO mapping	rw	UDINT	0x2002 0710	Index 0x2002, SubIndex 0x07 current on output OUT06
	0x04	PDO mapping	rw	UDINT	0x2002 0810	Index 0x2002, SubIndex 0x08 current on output OUT07
0x1A0A	0x00	Transmit PDO mapping Number of mapped objects in PDO	rw	USINT	0x03	mapping transmit PDO 11 (system flag) number of integrated application objects = 4
	0x01	PDO mapping	rw	UDINT	0x2040 0110	Index 0x2040, SubIndex 0x01 supply voltage of the system VBBS
	0x02	PDO mapping	rw	UDINT	0x2041 0110	Index 0x2041, SubIndex 0x01 output supply voltage VBB2
	0x03	PDO mapping	rw	UDINT	0x2050 0010	Index 0x2050, SubIndex 0x00 system temperature in °C

Manufacturer-specific objekts (index 0x2000...0x6FFF):

Index	S-idx	Designation	Data type		Default	Details	
0x2000	0x00	IO configu-ration Largest sub-index supported	ro	USINT	16	Configuration inputs/outputs largest supported Sub-index = 32	
	0x01	Configuration IN00	rw	USINT	10	0 = 0x00 3 = 0x03 6 = 0x06 7 = 0x07 9 = 0x09 10 = 0x0A 11 = 0x0B 12 = 0x0C 14 = 0x0E 20 = 0x14	off Input IN00 0...10 000 mV ratiometric 0...1000 ‰ 0...20 000 µA 0...32 000 mV binary plus switched binary plus switched with diagnosis binary minus switched frequency 0…30 000 Hz period duration as ratio 0…1 000 ‰
	0x02	Configuration IN01	rw	USINT	10	0 = 0x00 3 = 0x03 6 = 0x06 7 = 0x07 9 = 0x09 10 = 0x0A 11 = 0x0B 12 = 0x0C 14 = 0x0E 20 = 0x14	off Input IN01 0...10 000 mV ratiometric 0...1000 ‰ 0...20 000 µA 0...32 000 mV binary plus switched binary plus switched with diagnosis binary minus switched frequency 0…30 000 Hz period duration as ratio 0…1 000 ‰
	0x03	Configuration IN02	rw	USINT	10	0 = 0x00 3 = 0x03 6 = 0x06 7 = 0x07 9 = 0x09 10 = 0x0A 11 = 0x0B 12 = 0x0C 14 = 0x0E 20 = 0x14	off Input IN02 0...10 000 mV ratiometric 0...1000 ‰ 0...20 000 µA 0...32 000 mV binary plus switched binary plus switched with diagnosis binary minus switched frequency 0…30 000 Hz period duration as ratio 0…1 000 ‰

Index	S-idx	Designation	Data type		Default	Details	
0x2000	0x04	Configuration IN03	rw	USINT	10	0 = 0x00 3 = 0x03 6 = 0x06 7 = 0x07 9 = 0x09 10 = 0x0A 11 = 0x0B 12 = 0x0C 14 = 0x0E 20 = 0x14	off Input IN03 0...10 000 mV ratiometric 0...1000 ‰ 0...20 000 µA 0...32 000 mV binary plus switched binary plus switched with diagnosis binary minus switched frequency 0…30 000 Hz period duration as ratio 0…1 000 ‰
	0x05	Configuration IN04	rw	USINT	10	0 = 0x00 10 = 0x0A 11 = 0x0B 18 = 0x12	off Input IN04 binary plus switched binary plus switched with diagnosis 16…30 000 Ohm
	0x06	Configuration IN05	rw	USINT	10	0 = 0x00 10 = 0x0A 11 = 0x0B 18 = 0x12	off Input IN05 binary plus switched binary plus switched with diagnosis 16…30 000 Ohm
	0x07	Configuration IN06	rw	USINT	10	0 = 0x00 10 = 0x0A 11 = 0x0B 18 = 0x12	off Input IN06 binary plus switched binary plus switched with diagnosis 16…30 000 Ohm
	0x08	Configuration IN07	rw	USINT	10	0 = 0x00 10 = 0x0A 11 = 0x0B 18 = 0x12	off Input IN07 binary plus switched binary plus switched with diagnosis 16…30 000 Ohm
	0x09	Configuration OUT00	rw	USINT	2	0 = 0x00 2 = 0x02 4 = 0x04 5 = 0x05 15 = 0x0F 16 = 0x10	off Output OUT00 binary plus switched PWM output current control binary plus switched with diagnosis binary plus switched with diagnosis + protection

Index	S-idx	Designation	Data type		Default	Details	
0x2000	0x0A	Configuration OUT01	rw	USINT	2	0 = 0x00 2 = 0x02 4 = 0x04 5 = 0x05 15 = 0x0F 16 = 0x10	off Output OUT01 binary plus switched PWM output current control binary plus switched with diagnosis binary plus switched with diagnosis + protection
	0x0B	Configuration OUT02	rw	USINT	2	0 = 0x00 2 = 0x02 4 = 0x04 5 = 0x05 15 = 0x0F 16 = 0x10	off Output OUT02 binary plus switched PWM output current control binary plus switched with diagnosis binary plus switched with diagnosis + protection
	0x0C	Configuration OUT03	rw	USINT	2	0 = 0x00 2 = 0x02 4 = 0x04 5 = 0x05 15 = 0x0F 16 = 0x10	off Output OUT03 binary plus switched PWM output current control binary plus switched with diagnosis binary plus switched with diagnosis + protection
	0x0D	Configuration OUT04	rw	USINT	2	0 = 0x00 2 = 0x02 4 = 0x04 5 = 0x05 15 = 0x0F 16 = 0x10	off Output OUT04 binary plus switched PWM output current control binary plus switched with diagnosis binary plus switched with diagnosis + protection
	0x0E	Configuration OUT05	rw	USINT	2	0 = 0x00 2 = 0x02 4 = 0x04 5 = 0x05 15 = 0x0F 16 = 0x10	off Output OUT05 binary plus switched PWM output current control binary plus switched with diagnosis binary plus switched with diagnosis + protection

Index	S-idx	Designation	Data type		Default	Details	
0x2000	0x0F	Configuration OUT06	rw	USINT	2	0 = 0x00 2 = 0x02 4 = 0x04 5 = 0x05 15 = 0x0F 16 = 0x10	off Output OUT06 binary plus switched PWM output current control binary plus switched with diagnosis binary plus switched with diagnosis + protection
	0x10	Configuration OUT07	rw	USINT	2	0 = 0x00 2 = 0x02 4 = 0x04 5 = 0x05 15 = 0x0F 16 = 0x10	off Output OUT07 binary plus switched PWM output current control binary plus switched with diagnosis binary plus switched with diagnosis + protection
0x2001	0x00	PWM frequency	ro	USINT	8	Largest sub-index supported	
	0x01	PWM frequency OUT00	rw	UINT	100	20…250	OUT00 PWM frequency [Hz]
	0x02	PWM frequency OUT01	rw	UINT	100	20…250	OUT01 PWM frequency [Hz]
	0x03	PWM frequency OUT02	rw	UINT	100	20…250	OUT02 PWM frequency [Hz]
	0x04	PWM frequency OUT03	rw	UINT	100	20…250	OUT03 PWM frequency [Hz]
	0x5	PWM frequency OUT04	rw	UINT	100	20…250	OUT04 PWM frequency [Hz]
	0x6	PWM frequency OUT05	rw	UINT	100	20…250	OUT05 PWM frequency [Hz]
	0x7	PWM frequency OUT06	rw	UINT	100	20…250	OUT06 PWM frequency [Hz]
	0x8	PWM frequency OUT07	rw	UINT	100	20…250	OUT07 PWM frequency [Hz]

Index	S-idx	Designation	Data type		Default	Details	
0x2002	0x00	Current value	ro	USINT	8	Largest sub-index supported	
	0x01	Current value OUT00	ro	UINT	0	20…4000	OUT00 output current [mA]
	0x02	Current value OUT01	ro	UINT	0	20…4000	OUT01 output current [mA]
	0x03	Current value OUT02	ro	UINT	0	20…4000	OUT02 output current [mA]
	0x04	Current value OUT03	ro	UINT	0	20…4000	OUT03 output current [mA]
	0x05	Current value OUT04	ro	UINT	0	20…2500	OUT04 output current [mA]
	0x06	Current value OUT05	ro	UINT	0	20…2500	OUT05 output current [mA]
	0x07	Current value OUT06	ro	UINT	0	20…2500	OUT06 output current [mA]
	0x08	Current value OUT07	ro	UINT	0	20…2500	OUT07 output current [mA]
0x2004	0x00	P-value	ro	USINT	8	Largest sub-index supported	
	0x01	P-value OUT00	rw	USINT	30	0…255	OUT00 P-value for current control
	0x02	P-value OUT01	rw	USINT	30	0…255	OUT01 P-value for current control
	0x03	P-value OUT02	rw	USINT	30	0…255	OUT02 P-value for current control
	0x04	P-value OUT03	rw	USINT	30	0…255	OUT03 P-value for current control
	0x05	P-value OUT04	rw	USINT	30	0…255	OUT04 P-value for current control
	0x06	P-value OUT05	rw	USINT	30	0…255	OUT05 P-value for current control
	0x07	P-value OUT06	rw	USINT	30	0…255	OUT06 P-value for current control
	0x08	P-value OUT07	rw	USINT	30	0…255	OUT07 P-value for current control

Index	S-idx	Designation	Data type		Default	Details	
0x2005	0x00	I-value	ro	USINT	8	Largest sub-index supported	
	0x01	I-value OUT00	rw	USINT	20	0…255	OUT00 I-value for current control
	0x02	I-value OUT01	rw	USINT	20	0…255	OUT01 I-value for current control
	0x03	I-value OUT02	rw	USINT	20	0…255	OUT02 I-value for current control
	0x04	I-value OUT03	rw	USINT	20	0…255	OUT03 I-value for current control
	0x05	I-value OUT04	rw	USINT	20	0…255	OUT04 I-value for current control
	0x06	I-value OUT05	rw	USINT	20	0…255	OUT05 I-value for current control
	0x07	I-value OUT06	rw	USINT	20	0…255	OUT06 I-value for current control
	0x08	I-value OUT07	rw	USINT	20	0…255	OUT07 I-value for current control
0x2006	0x00	PWM dither frequency	ro	USINT	8	Largest sub-index supported	
	0x01	PWM dither frequency OUT00	rw	UINT	0	0…PWM-freq / 2	OUT00 PWM dither frequency [Hz]
	0x02	PWM dither frequency OUT01	rw	UINT	0	0…PWM-freq / 2	OUT01 PWM dither frequency [Hz]
	0x03	PWM dither frequency OUT02	rw	UINT	0	0…PWM-freq / 2	OUT02 PWM dither frequency [Hz]
	0x04	PWM dither frequency OUT03	rw	UINT	0	0…PWM-freq / 2	OUT03 PWM dither frequency [Hz]
	0x05	PWM dither frequency OUT04	rw	UINT	0	0…PWM-freq / 2	OUT04 PWM dither frequency [Hz]
	0x06	PWM dither frequency OUT05	rw	UINT	0	0…PWM-freq / 2	OUT05 PWM dither frequency [Hz]
	0x07	PWM dither frequency OUT06	rw	UINT	0	0…PWM-freq / 2	OUT06 PWM dither frequency [Hz]
	0x08	PWM dither frequency OUT07	rw	UINT	0	0…PWM-freq / 2	OUT07 PWM dither frequency [Hz]

Index	S-idx	Designation	Data type		Default	Details	
0x2007	0x00	PWM dither value	ro	USINT	8	Largest sub-index supported	
	0x01	PWM dither value OUT00	rw	UINT	0	0…1 000	OUT00 PWM dither value [‰]
	0x02	PWM dither value OUT01	rw	UINT	0	0…1 000	OUT01 PWM dither value [‰]
	0x03	PWM dither value OUT02	rw	UINT	0	0…1 000	OUT02 PWM dither value [‰]
	0x04	PWM dither value OUT03	rw	UINT	0	0…1 000	OUT03 PWM dither value [‰]
	0x05	PWM dither value OUT04	rw	UINT	0	0…1 000	OUT04 PWM dither value [‰]
	0x06	PWM dither value OUT05	rw	UINT	0	0…1 000	OUT05 PWM dither value [‰]
	0x07	PWM dither value OUT06	rw	UINT	0	0…1 000	OUT06 PWM dither value [‰]
	0x08	PWM dither value OUT07	rw	UINT	0	0…1 000	OUT07 PWM dither value [‰]
0x2012	0x00	Period input	ro	USINT	4	Largest sub-index supported	
	0x01	Period duration IN00	ro	UDINT	0	IN00 period duration [µs]	
	0x02	Period duration IN01	ro	UDINT	0	IN01 period duration [µs]	
	0x03	Period duration IN04	ro	UDINT	0	IN04 period duration [µs]	
	0x04	Period duration IN05	ro	UDINT	0	IN05 period duration [µs]	
0x2013	0x00	Period input number of periods for average	ro	USINT	4	Largest sub-index supported	
	0x01	Number of periods IN00	rw	USINT	4	1…255	IN00 number of periods
	0x02	Number of periods IN01	rw	USINT	4	1…255	IN01 number of periods
	0x03	Number of periods IN02	rw	USINT	4	1…255	IN02 number of periods
	0x04	Number of periods IN03	rw	USINT	4	1…255	IN03 number of periods

Index	S-idx	Designation	Data type		Default	Details	
0x2014	0x00	Period input – ratio value	ro	USINT	4	Largest sub-index supported	
	0x01	Period ratio value IN00	ro	UINT	0	0…1 000	IN00 marc-to-space ratio [‰]
	0x02	Period ratio value IN01	ro	UINT	0	0…1 000	IN01 marc-to-space ratio [‰]
	0x03	Period ratio value IN02	ro	UINT	0	0…1 000	IN02 marc-to-space ratio [‰]
	0x04	Period ratio value IN03	ro	UINT	0	0…1 000	IN03 marc-to-space ratio [‰]
0x2015	0x00	Frequency input	ro	USINT	4	Largest sub-index supported	
	0x01	Frequency IN00	ro	REAL	1	0…30 000	IN00 frequency [Hz]
	0x02	Frequency IN01	ro	REAL	1	0…30 000	IN01 frequency [Hz]
	0x03	Frequency IN02	ro	REAL	1	0…30 000	IN02 frequency [Hz]
	0x04	Frequency IN03	ro	REAL	1	0…30 000	IN03 frequency [Hz]
0x2016	0x00	Timebase	ro	USINT	4	Largest sub-index supported	
	0x01	Timebase IN00	rw	UINT	50	0…2 000	IN00 timebase [ms]
	0x02	Timebase IN01	rw	UINT	50	0…2 000	IN01 timebase [ms]
	0x03	Timebase IN02	rw	UINT	50	0…2 000	IN02 timebase [ms]
	0x04	Timebase IN03	rw	UINT	50	0…2 000	IN03 timebase [ms]
0x2020	0x00	Input – short to supply voltage	ro	USINT	1	Largest sub-index supported	
	0x01	Short to supply voltage IN00...IN07	ro	USINT	0	0 = normal 1 = short circuit	channels (bit coded) 0b---- ---X = IN00 0b---- --X- = IN01 0b---- -X-- = IN02 0b---- X--- = IN03 0b---X ---- = IN04 0b--X- ---- = IN05 0b-X-- ---- = IN06 0bX--- ---- = IN07

Index	S-idx	Designation	Data type		Default	Details	
0x2021	0x00	Input – wire break	ro	USINT	1	Largest sub-index supported	
	0x01	Wire break IN00...IN07	ro	USINT	0	0 = normal 1 = wire break	channels (bit coded) 0b---- ---X = IN00 0b---- --X- = IN01 0b---- -X-- = IN02 0b---- X--- = IN03 0b---X ---- = IN04 0b--X- ---- = IN05 0b-X-- ---- = IN06 0bX--- ---- = IN07
0x2022	0x00	Output – short circuit	ro	USINT	1	Largest sub-index supported	
	0x01	Short circuit OUT00… OUT07	ro	USINT	0	0 = normal 1 = short circuit	channels (bit coded) 0b---- ---X = OUT00 0b---- --X- = OUT01 0b---- -X-- = OUT02 0b---- X--- = OUT03 0b---X ---- = OUT04 0b--X- ---- = OUT05 0b-X-- ---- = OUT06 0bX--- ---- = OUT07
0x2023	0x00	Output – open circuit	ro	USINT	1	Largest sub-index supported	
	0x01	Open circuit OUT00… OUT07	ro	USINT	0	0 = normal 1 = open circuit	channels (bit coded) 0b---- ---X = OUT00 0b---- --X- = OUT01 0b---- -X-- = OUT02 0b---- X--- = OUT03 0b---X ---- = OUT04 0b--X- ---- = OUT05 0b-X-- ---- = OUT06 0bX--- ---- = OUT07
0x2024	0x00	Output – overload	ro	USINT	1	Largest sub-index supported	
	0x01	Overload OUT00… OUT07	ro	USINT	0	0 = normal 1 = overload	channels (bit coded) 0b---- ---X = OUT00 0b---- --X- = OUT01 0b---- -X-- = OUT02 0b---- X--- = OUT03 0b---X ---- = OUT04 0b--X- ---- = OUT05 0b-X-- ---- = OUT06 0bX--- ---- = OUT07

Index	S-idx	Designation	Data type		Default	Details	
0x2025	0x00	Input analog – overcurrent	ro	USINT	1	Largest sub-index supported	
	0x01	Overcurrent IN00, IN01,IN02 und IN03	ro	USINT	0	0 = normal 1 = overcurrent	channels (bit coded) 0b---- ---X = IN00 0b---- --X- = IN01 0b---- -X-- = IN02 0b---- X--- = IN03
0x2030	0x00	Input resistor	ro	USINT	4	Largest sub-index supported	
	0x01	Resistance IN04	ro	UINT	0	0…30 000	IN04 resistance [Ohms]
	0x02	Resistance IN05	ro	UINT	0	0…30 000	IN05 resistance [Ohms]
	0x03	Resistance IN06	ro	UINT	0	0…30 000	IN06 resistance [Ohms]
	0x04	Resistance IN07	ro	UINT	0	0…30 000	IN07 resistance [Ohms]
0x2040	0x00	System supply voltage VBBS	ro	USINT	1	Largest sub-index supported	
	0x01	VBBS	ro	USINT	0	VBBS voltage [mV]	
0x2041	0x00	Output supply voltage	ro	USINT	1	Largest sub-index supported	
	0x01	VBB2	ro	UINT	0	VBB2 voltage [mV]	
0x2050		Device temperature	ro	UINT	0	temperature [°C]	
0x20F0		Node ID	rw	USINT	125	1…125	node ID [!] value(0x20F0) != value(20F1)
0x20F1		Node ID	rw	USINT	125	1…125	node ID [!] value(0x20F0) != value(20F1)
0x20F2		Baud rate	rw	USINT	3	baud rate [!] value(0x20F2) != value(20F3)	
						0	1000 kBit/s
						1	800 kBit/s
						2	500 kBit/s
						3	250 kBit/s
						4	125 kBit/s
						5	100 kBit/s
						6	50 kBit/s
						7	20 kBit/s

Index	S-idx	Designation	Data type		Default	Details	
0x20F3		Baud rate	rw	USINT	3	baud rate [!] value(0x20F2) != value(20F3)	
0x20F4		Autostart	rw	UINT	0	not used	
0x20F5		Lock edit mode	rw	USINT	0	0 = edit mode unlocked 1 = edit mode locked	
0x20F6		CAN interface	rw	USINT	1	1...2	CAN interface [!] value(0x20F6) != value(20F7)
0x20F7		CAN interface	rw	USINT	1	1...2	CAN interface [!] value(0x20F6) != value(20F7)
0x6000	0x00	Binary input Largest sub-index supported	ro	USINT	0x02	Binary inputs Largest supported sub-index = 2	
	0x01	Binary inputs IN00 - IN07	ro	USINT	0	Binary inputs IN00…IN07 0b---- ---X = IN00 0b---- --X- = IN01 0b---- -X-- = IN02 0b---- X--- = IN03 0b---X ---- = IN04 0b--X- ---- = IN05 0b-X-- ---- = IN06 0bX--- ---- = IN07	
0x6200	0x00	Binary output Largest sub-index supported	ro	USINT	0x02	Binary outputs Largest supported sub-index = 2	
	0x01	Binary outputs OUT00 - OUT07	wo	USINT	0	Binary outputs OUT00…OUT07 0b---- ---X = OUT00 0b---- --X- = OUT01 0b---- -X-- = OUT02 0b---- X--- = OUT03 0b---X ---- = OUT04 0b--X- ---- = OUT05 0b-X-- ---- = OUT06 0bX--- ---- = OUT07	

Index	S-idx	Designation	Data type		Default	Details
0x6404	0x00	Analogue input Largest sub-index supported	ro	USINT	0x04	Analogue inputs Largest supported sub-index = 4
	0x01	Analogue input IN00	ro	UINT	--	Analogue value of input IN00
	0x02	Analogue input IN01	ro	UINT	--	Analogue value of input IN01
	0x03	Analogue input IN02	ro	UINT	--	Analogue value of input IN02
	0x04	Analogue input IN03	ro	UINT	--	Analogue value of input IN03
0x6414	0x00	PWM output Largest sub-index supported	ro	USINT	0x08	PWM outputs Largest supported sub-index = 12
	0x01	PWM output OUT00	wo	UINT	--	Value for PWM output OUT00
	0x02	PWM output OUT01	wo	UINT	--	Value for PWM output OUT01
	0x03	PWM output OUT02	wo	UINT	--	Value for PWM output OUT02
	0x04	PWM output OUT03	wo	UINT	--	Value for PWM output OUT03
	0x05	PWM output OUT04	wo	UINT	--	Value for PWM output OUT04
	0x06	PWM output OUT05	wo	UINT	--	Value for PWM output OUT05
	0x07	PWM output OUT06	wo	UINT	--	Value for PWM output OUT06
	0x08	PWM output OUT07	wo	UINT	--	Value for PWM output OUT07

12.3 SDOs error messages

12.3.1 CR2040

The following messages are created in case of an error:

Index	S-idx	Designation	Data type		Default	Details	
0x1001		Error register	ro	USINT	0	Error register bit coded to profil 301 permissible values: 0b0000 0000 = no error 0b0000 0001 = generic error 0b0001 0000 = communication error 0b1000 0000 = manufacturer specific	
0x1003	0x00	Predefined error field Number of entries	rw	UDINT	0	An error list with 4 entries is supported.	
	0x01	Error history	ro	UDINT	0	Error occured; coded according to EMCY list The last error is indicated in the sub-index 1	
	0x02	Error history	ro	UDINT	0	Error occured; coded according to EMCY list	
	0x03	Error history	ro	UDINT	0	Error occured; coded according to EMCY list	
	0x04	Error history	ro	UDINT	0	Error occured; coded according to EMCY list	
	0x05	Error history	ro	UDINT	0	Error occured; coded according to EMCY list	
0x2020	0x00	Input – short to supply voltage	ro	USINT	2	Largest sub-index supported	
	0x01	Short to supply voltage IN00... IN07	ro	USINT	0	0 = normal 1 = short circuit	channels (bit coded) 0b---- ---X = IN00 0b---- --X- = IN01 0b---- -X-- = IN02 0b---- X--- = IN03 0b---X ---- = IN04 0b--X- ---- = IN05 0b-X-- ---- = IN06 0bX--- ---- = IN07
	0x02	Short to supply voltage IN08, IN10, IN12, IN14	ro	USINT	0	0 = normal 1 = short circuit	channels (bit coded) 0b---- ---X = IN08 0b---- --X- = IN10 0b---- -X-- = IN12 0b---- X--- = IN14

Index	S-idx	Designation	Data type		Default	Details	
0x2021	0x00	Input – wire break	ro	USINT	2	Largest sub-index supported	
	0x01	Wire break IN00... IN07	ro	USINT	0	0 = normal 1 = wire break	channels (bit coded) 0b---- ---X = IN00 0b---- --X- = IN01 0b---- -X-- = IN02 0b---- X--- = IN03 0b---X ---- = IN04 0b--X- ---- = IN05 0b-X-- ---- = IN06 0bX--- ---- = IN07
	0x02	Wire break IN08, IN10, IN12, IN14	ro	USINT	0	0 = normal 1 = wire break	channels (bit coded) 0b---- ---X = IN08 0b---- --X- = IN10 0b---- -X-- = IN12 0b---- X--- = IN14
0x2025	0x00	Input analog – overcurrent	ro	USINT	1	Largest sub-index supported	
	0x01	Overcurrent IN00...IN07	ro	USINT	0	0 = normal 1 = overcurrent	channels (bit coded) 0b---- ---X = IN00 0b---- --X- = IN01 0b---- -X-- = IN02 0b---- X--- = IN03 0b---X ---- = IN04 0b--X- ---- = IN05 0b-X-- ---- = IN06 0bX--- ---- = IN07

12.3.2 CR2041

The following messages are created in case of an error:

Index	S-idx	Designation	Data type		Default	Details	
0x1001		Error register	ro	USINT	0	Error register bit coded to profil 301 permissible values: 0b0000 0000 = no error 0b0000 0001 = generic error 0b0001 0000 = communication error 0b1000 0000 = manufacturer specific	
0x1003	0x00	Predefined error field Number of entries	rw	UDINT	0	An error list with 4 entries is supported.	
	0x01	Error history	ro	UDINT	0	Error occured; coded according to EMCY list The last error is indicated in the sub-index 1	
	0x02	Error history	ro	UDINT	0	Error occured; coded according to EMCY list	
	0x03	Error history	ro	UDINT	0	Error occured; coded according to EMCY list	
	0x04	Error history	ro	UDINT	0	Error occured; coded according to EMCY list	
	0x05	Error history	ro	UDINT	0	Error occured; coded according to EMCY list	
0x2022	0x00	Output – short circuit	ro	USINT	2	Largest sub-index supported	
	0x01	Short circuit OUT00…OUT07	ro	USINT	0	0 = normal 1 = short circuit	channels (bit coded) 0b---- ---X = OUT00 0b---- --X- = OUT01 0b---- -X-- = OUT02 0b---- X--- = OUT03 0b---X ---- = OUT04 0b--X- ---- = OUT05 0b-X-- ---- = OUT06 0bX--- ---- = OUT07
	0x02	Short circuit OUT08…OUT15	ro	USINT	0	0 = normal 1 = short circuit	channels (bit coded) 0b---- ---X = OUT08 0b---- --X- = OUT09 0b---- -X-- = OUT10 0b---- X--- = OUT11 0b---X ---- = OUT12 0b--X- ---- = OUT13 0b-X-- ---- = OUT14 0bX--- ---- = OUT15

Index	S-idx	Designation	Data type		Default	Details	
0x2023	0x00	Output – open circuit	ro	USINT	2	Largest sub-index supported	
	0x01	Open circuit OUT00…OUT07	ro	USINT	0	0 = normal 1 = open circuit	channels (bit coded) 0b---- ---X = OUT00 0b---- --X- = OUT01 0b---- -X-- = OUT02 0b---- X--- = OUT03 0b---X ---- = OUT04 0b--X- ---- = OUT05 0b-X-- ---- = OUT06 0bX--- ---- = OUT07
	0x02	Open circuit OUT08…OUT15	ro	USINT	0	0 = normal 1 = open circuit	channels (bit coded) 0b---- ---X = OUT08 0b---- --X- = OUT09 0b---- -X-- = OUT10 0b---- X--- = OUT11 0b---X ---- = OUT12 0b--X- ---- = OUT13 0b-X-- ---- = OUT14 0bX--- ---- = OUT15
0x2024	0x00	Output – overload	ro	USINT	1	Largest sub-index supported	
	0x01	Overload OUT00…OUT07	ro	USINT	0	0 = normal 1 = overload	channels (bit coded) 0b---- ---X = OUT00 0b---- --X- = OUT01 0b---- -X-- = OUT02 0b---- X--- = OUT03 0b---X ---- = OUT04 0b--X- ---- = OUT05 0b-X-- ---- = OUT06 0bX--- ---- = OUT07

12.3.3 CR2042

The following messages are created in case of an error:

Index	S-idx	Designation	Data type		Default	Details	
0x1001		Error register	ro	USINT	0	Error register bit coded to profil 301 permissible values: 0b0000 0000 = no error 0b0000 0001 = generic error 0b0001 0000 = communication error 0b1000 0000 = manufacturer specific	
0x1003	0x00	Predefined error field Number of entries	rw	UDINT	0	An error list with 4 entries is supported.	
	0x01	Error history	ro	UDINT	0	Error occured; coded according to EMCY list The last error is indicated in the sub-index 1	
	0x02	Error history	ro	UDINT	0	Error occured; coded according to EMCY list	
	0x03	Error history	ro	UDINT	0	Error occured; coded according to EMCY list	
	0x04	Error history	ro	UDINT	0	Error occured; coded according to EMCY list	
	0x05	Error history	ro	UDINT	0	Error occured; coded according to EMCY list	
0x2020	0x00	Input – short to supply voltage	ro	USINT	1	Largest sub-index supported	
	0x01	Short to supply voltage IN00...IN07	ro	USINT	0	0 = normal 1 = short circuit	channels (bit coded) 0b---- ---X = IN00 0b---- --X- = IN01 0b---- -X-- = IN02 0b---- X--- = IN03 0b---X ---- = IN04 0b--X- ---- = IN05 0b-X-- ---- = IN06 0bX--- ---- = IN07
0x2021	0x00	Input – wire break	ro	USINT	1	Largest sub-index supported	
	0x01	Wire break IN00... IN07	ro	USINT	0	0 = normal 1 = wire break	channels (bit coded) 0b---- ---X = IN00 0b---- --X- = IN01 0b---- -X-- = IN02 0b---- X--- = IN03 0b---X ---- = IN04 0b--X- ---- = IN05 0b-X-- ---- = IN06 0bX--- ---- = IN07

Index	S-idx	Designation	Data type		Default	Details	
0x2022	0x00	Output – short circuit	ro	USINT	1	Largest sub-index supported	
	0x01	Short circuit OUT00…OUT07	ro	USINT	0	0 = normal 1 = short circuit	channels (bit coded) 0b---- ---X = OUT00 0b---- --X- = OUT01 0b---- -X-- = OUT02 0b---- X--- = OUT03 0b---X ---- = OUT04 0b--X- ---- = OUT05 0b-X-- ---- = OUT06 0bX--- ---- = OUT07
0x2023	0x00	Output – open circuit	ro	USINT	1	Largest sub-index supported	
	0x01	Open circuit OUT00…OUT07	ro	USINT	0	0 = normal 1 = open circuit	channels (bit coded) 0b---- ---X = OUT00 0b---- --X- = OUT01 0b---- -X-- = OUT02 0b---- X--- = OUT03 0b---X ---- = OUT04 0b--X- ---- = OUT05 0b-X-- ---- = OUT06 0bX--- ---- = OUT07
0x2024	0x00	Output – overload	ro	USINT	1	Largest sub-index supported	
	0x01	Overload OUT00…OUT07	ro	USINT	0	0 = normal 1 = overload	channels (bit coded) 0b---- ---X = OUT00 0b---- --X- = OUT01 0b---- -X-- = OUT02 0b---- X--- = OUT03 0b---X ---- = OUT04 0b--X- ---- = OUT05 0b-X-- ---- = OUT06 0bX--- ---- = OUT07
0x2025	0x00	Input analog – overcurrent	ro	USINT	1	Largest sub-index supported	
	0x01	Overcurrent IN00, IN01, IN02 und IN03	ro	USINT	0	0 = normal 1 = overcurrent	channels (bit coded) 0b---- ---X = IN00 0b---- --X- = IN01 0b---- -X-- = IN02 0b---- X--- = IN03