Patient Monitoring System

HJ-500/HC-530

Module

Service Manual

- Before setting up/maintenance, please read this service manual carefully.
- Keep this manual where it can be always referred to.

FUKUDA DENSHI

Copyright © 2006 by Fukuda Denshi Co., Ltd.
No part of this document may be copied or transmitted in any form without the prior written permission of Fukuda Denshi Co., Ltd.

Printed in Japan

Safety Messages

The following safety messages are used throughout this manual. These notices have different meanings as described below. Read this section carefully and become familiar with their meaning.

⚠WARNING	Failure to follow this message may result in death or serious injury to the patient or operator.
⚠CAUTION	Failure to follow this message may cause injury to the patient or operator, or may cause damage to the equipment.
NOTE	A note is not related to product safety. A note provides information about the proper use and operating methods to prevent incorrect operation and trouble with the unit.

Symbol

Symbol	Description
	This symbol on the unit indicates that some hazard might be present. Relevant information is supplied in this operation manual.
	Defibrillation-Proof Type CF Equipment This indicates that this system is Defibrillation-Proof Type CF Equipment.

Precautions for safe operation of medical electrical equipment

⚠CAUTION

Precautions for safe operation of medical electrical equipment

To operate the device correctly, read the following precautions carefully.

- **Before using this system, become familiar with its operation.**
- **On the installation and storage of the system:**
  - Do not install or store in an area where there is splashing water or excessive humidity.
  - Do not install or store in an area where the environmental conditions, such as atmospheric pressure, temperature, sunlight, dust, sodium, sulfur, will adversely affect the system.
  - Do not install or store in an area that is subject to excessive vibration, shock or where the instrument may fall.
  - Do not install or store in an area where there are chemicals or gasses stored.
  - When using this device near devices generating high-frequency interference, such as mobile phones and electrosurgical knives, verify the recorder operation is normal.
  - Verify the power voltage and frequency before connecting to the AC power source.
  - Verify the power source can provide adequate current as indicated on the power rating label on the device.
- **Before operating the system, verify the following items:**
  - Ensure all cables are connected firmly and the system works correctly.
  - Make sure the power system has adequate Earth ground. If necessary, use the accessory ground cable and connect it to the ground terminal.
  - Pay special attention when the device is used in conjunction with other equipment.
  - Ensure any patient connections are connected properly and securely.
- **During operation of the system, verify the following items:**
  - The system and patient should be continuously monitored to ensure safe and proper operation.
  - If a malfunction occurs, adequate measures should be immediately taken to cease operation in the safest way for the patient.
  - Do not allow the patient to touch the equipment.
- **After use of the system, verify the following items:**
  - Unplug all cables from patient before turning the power OFF.
  - When unplugging any of the cables connected to the device, do not pull on the cable itself. Always remove any cables by pulling on the connector.
  - Always clean the unit and cables, if necessary to prepare for the next use.
- **If the equipment is broken and in need of repair, do not attempt service. Label the unit "OUT OF ORDER" and contact Fukuda Denshi for service.**
- **Do not remodel the equipment.**
- **Maintenance checks.**
  - Make sure to periodically check the equipment and parts.
  - Before reusing a device which has been left unused for a while, make sure that the device works normally and safely.
- **When use electrosurgical knives or defibrillator while using device, verify the followings so that patient may not burn.**
  - For electrosurgical knives, verify antipole board loading and ECG electrode modes.
  - For defibrillator, verify paste volume and output energy. In addition, make sure each device is firmly grounded.

●Precautions about the Pacemakers

⚠WARNING

Minute ventilation rate-adaptive implantable pacemakers can occasionally interact with certain cardiac monitoring and diagnostic equipment, causing the pacemakers to pace at their maximum programmed rate. The cardiac monitoring and diagnostic equipment may possibly send wrong information. If such event occurs, please disconnect the cardiac monitoring and diagnostic equipment, or follow the procedures described in the operation manual of the pacemaker. For more details, contact Fukuda Denshi personnel, your institution's professionals or your pacemaker distributors.

➲Reference

"Minute Ventilation Rate-Adaptive Pacemakers"
FDA alerts health professionals that minute ventilation rate-adaptive implantable pacemakers can occasionally interact with certain cardiac monitoring and diagnostic equipment, causing pacemakers to pace at their maximum programmed rate.
[October 14, 1998(Letter:www.fda.gov/cdrh/safety.html)-FDA]

●Precautions about the device

⚠DANGER

- **When connect this device to another device, contact Fukuda Denshi for service.**
  Electric shock or some dangerous consequence may result to patient and operator.
- **To avoid the risk of explosion, do not use in the presence of combustible of flammable material such as flammable anesthetic gas, hydrogen.**
  Explosion or fire may result.
- **When using multiple devices together, make sure they are properly grounded to achieve an equipotential ground.**
  Electric shock may result if proper grounding is not observed.

⚠WARNING

- **Do not connect to I/O connectors except with devices or wires authorized by Fukuda Denshi.**
  If use unauthorized devices and wires, either of function and safety cannot be ensured and damage may result to devices.
- **If use this device under insufficient condition, either of function and safety cannot be ensured and damage may result to device.**
- **Electrosurgical knives can not be used simultaneously with the HJ-500. When using the electrosurgical knives, disconnect the cables from the HJ-500.**
  High radio frequency energy generated by electrosurgical knives may cause a burn injury at the electrode sites, or may cause damage to the device. There is also a danger of electric shock.
- **Do not touch this device during defibrillation.**
  Electric shock or some dangerous consequence may result to patient and operator.
- **Do not dismantle/remodel the equipment.**
  Electric shock may result.

⚠WARNING

- **Do not cover the vent holes on the front panel.**
  The temperature rise inside the equipment may cause damage or malfunction of the equipment.
- **If device gets wet with water or medicament, stop monitoring and unplug power cable.**
  Before starting up the device again, make sure of its safety.
- **Set the pacemaker used/unused information correctly in the patient admit/discharge setup.**
  This affects the measurement accuracy of QRS detection and arrhythmia analysis.
- **Arrhythmia detection is sometimes affected by excessive changes in waveform, artifact, or lack of pattern recognition, which may cause an error in the detection. Final decision should be made by the physician.**
- **Cable connection of analog signal output should be performed only by trained personnel.**
  Electric shock hazard may occur to the user, or a malfunction of the device may occur.
- **Analog signal of this device is output in delayed time.**
  The delay time of the waveform and QRS synchronized signal may vary depending on the waveform shape and presence of artifact.
- **Inside the calibration gas cylinder is applied pressure. Do not puncture. Do not use or store in the presence of heat or open flame. If exposed to the temperature above 54°C, leakage or explosion may result. Never discard the cylinder into the fire or incinerator. (Printed on the gas cylinder.)**

⚠WARNING

- **Long-term hyperthermia may blister skin. Also, when producing local hyperaemia by means of hyperthermia, a certain risk of applying a heat exposure that is harmful to the skin is always present. For special patients, e.g. patients in shock, patients with low blood pressure, and patients with vascular constrictions, particular care should be taken whenever hyperthermia is produced.**
- **During monitoring, electrodes need to be replaced at least every 4 hours to avoid burn on patient's skin.**

⚠CAUTION

- This device is not intended for use with the IB-7006 of the polygraph system (MCS-7000 System). Do not use polygraph system modules with the DS-5000 System. The device can be damaged and/or safety cannot be ensured.
- This device is not intended for use outside the hospital (including in ambulance), under MRI environment, inside a hyperbaric chamber or in the presence of flammable anesthetic gas.
- For quality improvement, specifications are subject to change without prior notice.
- Upgrading of the program, maintenance test, module install (upgrade), and demonstration functions should be performed only by Fukuda Denshi authorized personnel. Users should not attempt to perform any of these operations. Malfunction may occur to the device.
- Do not open the external case of this device.
- Lead cables and amplifiers are galvanically isolated from other parts of the equipment, but if the electrodes are touching other metal parts or patient's limbs, the galvanic isolation will not function. Electric shock may occur even if the equipment is grounded.
- If the power cables for several equipments are connected to the same outlet, the leakage current will increase and may cause hazardous condition to the patient.

12ECG/RESP Monitoring

- When using the HJ-500 and the HS-500 simultaneously, the measurements by the HJ-500 will be given priority. Waveforms and measurements measured by the HS-500 will not be displayed.
- The HJ-500 is a CF type equipment, but is not intended for use directly to the heart.
- Be especially cautious when monitoring ECG of a patient with pacemaker or other electrical equipment connected.
- For stable monitoring, use the specified electrodes and leads.
- When applying ECG electrodes to the patient, follow the instruction of the physician.
- If ECG electrodes are located at the same place for a long time period, some patients may experience a rash. Check the electrodes periodically and change the placement if necessary.
- When using a defibrillator during ECG monitoring, the high-voltage discharge will generate a polarization potential in the electrode, and may interrupt monitoring for a few seconds.
- A pacemaker pulse is detected by hardware. Stable detection may not be acquired if the pacemaker pulse signal gets small depending on the pacemaker type, output pulse voltage, pulse width, electrode lead type (unipolar, bipolar), and lead position.
- If there is a device generating noise near the patient, this noise can be erroneously detected and displayed as a pacemaker pulse.
- When a pacemaker pulse wave resembles the QRS wave, QRS detection (heart rate counting) may not be performed.

⚠CAUTION

- Sometimes automatic QRS detection may not be performed, even though the QRS amplitude value is above the threshold level.
- Automatic QRS detection may not be performed when the QRS amplitude is extremely low and wide, or when noise is interfering.
- Manual QRS detection is always performed on the absolute level and may cause erroneous detection in cases where there is excessive baseline drift of the ECG waveform. 180ms after the detection of the peak of the R-wave will be a T-Wave Lock Out Time to prevent detecting the T-wave as QRS (double counting).
- When turning on the AC filter or when Monitor Mode is selected, the amplitude of the ECG waveform might become small or distorted.
- If "LEAD OFF" condition continues when automatic lead switching is set to ON, the ECG lead will automatically switch to another lead, and when "LEAD OFF" condition is resolved, it will return to the original lead.
- For using the HJ-500, proper setting on the DS-5300 bedside monitor is necessary. Set the "HJ-500" to ON for the "MODULE CONFIG." in the preset menu. (Refer to the DS-5300 operation manual.)
- When monitoring with the 3-electrode lead, proper setting on the DS-5300 bedside monitor is necessary. Set the "HJ-500 3LEAD" to ON in the ECG configuration menu. (Refer to the DS-5300 operation manual.)
- Manual respiration detection is always performed on the absolute level and may cause erroneous detection in cases where there is excessive baseline drift.

$TcpO_2/pO_2$ Monitoring

- Use electrodes and accessories specified by Fukuda Denshi. If not, the unit may not perform its function fully and may result in skin burns.
- Improper cleaning of the electrodes adversely affects the calibration value.
- Electrodes need to be calibrated. Perform calibration correctly.
- Set the calibrated value, temperature of electrodes and monitoring time on the monitor in advance. For the setting procedure, refer to the operation manual for the patient monitor.
- If electrodes are not removed from the socket within 30 minutes after the Ready LED turns ON, electrode heating stops automatically (Ready LED turns OFF) to prevent drying of the electrolyte. Electrodes will need to be recalibrated.
- TcpO2 and $tcpCO_2$ monitoring should be used as an auxiliary for measuring pCO_2 in the artery. Do not use for patients with critical blood circulation.
- If electrodes are not removed from the socket within 30 minutes after calibration, electrode heating stops automatically to prevent drying of the electrolyte. When used later for measurement, electrodes need to be recalibrated.
- The electrode may be rejected because of an incorrect preset calibration value.

Maintenance

- Do not allow alcohol or other liquids to enter the equipment and connectors.
- Do not use organic solvents, thinner, toluene and benzene to avoid damaging the resin cabinet.
- Do not polish the case with abrasive or chemical cleaner.
- When sterilizing the entire room by using a spray, be cautious not to allow chemicals to enter the device or the connector.
- Use only the accessories specified for this equipment. Failure to use the specified accessories may result in improper function or operation.

●Disposing of Equipment, Accessories, or Components

⚠	**When disposing of the equipment, accessories, or components, use an industrial waste distributor. Do not dispose of as an ordinary waste.**

Safety

Only persons familiar with the operational procedure for monitoring 12ECG/RESP and tcpO_2/CO_2 measurements should be authorized to use this equipment.

●Design and Construction

These modules are designed to be classified as IEC 60601-1 type CF.

●Preventive Maintenance

The purpose of preventive maintenance is to eliminate potential problems and to keep the instrument in a condition providing completely safe, satisfactory operation.
Preventive maintenance should be carried out at least once a year as prescribed in the Service Manual for these modules.
Before using the instrument, always ensure that the unit shows no signs of damage.
Immediate maintenance has to be carried out:

- If the instrument was subject to extreme mechanical stress, e.g. after a heavy fall.
- If the instrument was subject to spill of liquids.
- If the function of the instrument seems to be interrupted or disturbed.
- If parts of the enclosure of the instrument are cracked, removed, or lost.
- If any connector or cord shows signs of deterioration.

●Leakage Current

The system is designed to meet the standards for safe electrical current per IEC 601-1.

●Non-explosion Proof

These modules are not designed to for operation in areas in which there is a risk of explosion.

●Cleaning and Disinfection

Cables

For disinfection, the cables should be rubbed with a swab or cloth moistened with a formaldehyde solution, such as Cidex 5%.

Module

The instrument cabinet may be cleaned and disinfected in the following manner,

Cleaning:

Rub the unit with a cleaning cloth moistened with water to which an ordinary household cleaning agent can be added if necessary. Never use ether or benzene.

Disinfection:

Thoroughly spray the cabinet with 5% Cidex or a similar product.

Notes to Users

This operation manual gives a description of the fully-provided system. Therefore, read this manual thoroughly to understand those items related to your system composition.

●Paper Handling Precautions

Since the system recorder used for documentation uses highly-sensitive thermal paper, take the following precautions:

- Do not expose to direct sunlight or leave in a high temperature environment.
- Do not keep it under fluorescent lighting for a long period of time.
- Do not use PVC film for storage.
- If the recorded paper is stored for a long period of time while in contact with another recorded paper, the waveforms may be copied onto each other.

●Repairs and Modifications

As a manufacturer of electromedical instruments, we, FUKUDA DENSHI, can only assume responsibility for the safety features of the instrument in those cases in which maintenance, repairs and modifications have been carried out by us or agencies expressly authorized by us and in which components affecting the safety of the instrument have been replaced by original spare parts in the event of failure.
Furthermore, when such work is carried out, we advise you to get a certificate from the persons carrying out the work indicating the type and extent of the work, including details about any changes in the rated data or operating range.
The certificate should specify the date when the work was carried out and the name of the firm and include a signature.

CAUTION
Federal law restricts this device to sale by or on the order of a physician.

This page is only for the USA.

Contents

Safety Messages ····· i
Precautions for safe operation of medical electrical equipment ····· ii
Safety ····· vii
Notes to Users ····· ix

Chapter 1 Introduction ····· **1—1**
Features ····· **1—1**

Chapter 2 Controls and Functions ····· **2—1**
HJ-500 ····· **2—1**
Front View ····· 2—1
Rear View ····· 2—2
HC-530 ····· **2—3**
Front View ····· 2—3
Rear View ····· 2—4

Chapter 3 Accessories ····· **3—1**
Accessories ····· **3—1**
HJ-500 ····· 3—1
HC-530 ····· 3—1
Optional Accessories ····· **3—1**
HJ-500 ····· 3—1
HC-530 ····· 3—1

Chapter 4 Preparation ····· **4—1**
Connection to the Main Monitor ····· **4—1**
Installation into the Input Box ····· 4—2
Removal from the Input Box ····· 4—2
Precaution about the HJ-500 ····· **4—3**

Chapter 5 Maintenance ····· **5—1**
Cautions ····· **5—1**
After using the Equipment ····· 5—1
Cleaning ····· 5—1
Storage ····· 5—1
Maintenance Check ····· 5—1
Cleaning ····· **5—2**
Maintenance for Transcutaneous Electrode(HC-530) ····· 5—2
Maintenance Check ····· **5—2**
Daily Check ····· 5—3
Periodical Check ····· 5—3

Chapter 6 Troubleshooting ····· **6—1**
12ECG·RESP（HJ-500） ····· **6—1**
$TcpO_2$/pCO_2（HC-530） ····· **6—4**

Chapter 7 Specifications ····· **7—1**

Chapter 8 Circuit Description ····· **8—1**
BLOCK DIAGRAM(HJ-500) ····· **8—1**
Circuit Description(HJ-500) ····· **8—6**
HJ-500 Theory of Operation ····· 8—6
HJAMP Theory of Operation ····· 8—7
HJRESP Theory of Operation ····· 8—8
HJCPU Theory of Operation ····· 8—9
HJPWR Theory of Operation ····· 8—11
BLOCK DIAGRAM(HC-530) ····· **8—12**
Circuit Description(HC-530) ····· **8—13**
HC-530 Theory of Operation ····· 8—13
PCB-6619 TCP Board ····· 8—14
PCB-6597 I/F Board ····· 8—16
Electrode Error Processing(HC-530) ····· 8—18

Chapter 9 Parts Lists ····· **9—1**
HJ-500 ····· **9—1**
HC-530 ····· **9—9**

Chapter 10 Circuit Diagrams ····· **10—1**
HJ-500 ····· **10—1**
HJAMP ····· 10—1
HJRESP ····· 10—12
HJCPU ····· 10—20
HJPWR ····· 10—31
HC-530 ····· **10—35**
IF Board PCB-6597 523-2184 ····· 10—35
TCP Board PCB-6619 523-2233 ····· 10—46

Chapter 11 Assembly Diagram ····· **11—1**
HJ-500 ····· **11—1**
HJAMP ····· 11—1
HJRESP ····· 11—4
HJCPU ····· 11—7
HJPWR ····· 11—10
HC-530 ····· **11—13**
IF Board PCB-6597 434-5394 ····· 11—13
TCP Board PCB-6619 433-5516 ····· 11—15

Chapter 12 Secondary Process Diagram ····· **12—1**
HJ-500 ····· **12—1**
HJRESP ····· 12—1
HJCPU ····· 12—1
HC-530 ····· **12—3**
IF Board PCB-6597 434-5395 ····· 12—3
TCP Board PCB-6619 433-5531 ····· 12—4

Chapter 13 Structural Diagram ····· **13—1**
HJ-500 ····· **13—1**
ECG Cable Assembly ····· 13—1
PACEMAKER Cable Assembly ····· 13—2
RESP Cable Assembly ····· 13—3
Fan Interface Assembly ····· 13—4
AMP/RESP Board assembly ····· 13—5
CPU Board Assembly ····· 13—7
Power Board Assembly ····· 13—8
Fan Cable Assembly 434-5528 ····· 13—9
Analog Out Connector Cable Assembly 324-4208 ····· 13—10
PWB Assembly 424-4246 ····· 13—11
General Assembly (1) 423-4375 ····· 13—12
General Assembly (2) 424-4376 ····· 13—13
General Assembly (3) 423-4377 ····· 13—14
HC-530 ····· **13—15**
Input Connector Cable Assembly 434-5505 ····· 13—15
Micro Switch Cable Assembly 434-5506 ····· 13—16
General Assembly (1) 423-4379 ····· 13—17
General Assembly (2) 424-4380 ····· 13—18

Blank Page

Chapter 1

Introduction

Features 1-1

Chapter 1 Introduction

The HJ-500 12 ECG･RESP Module is a parameter module for monitoring 12-lead ECG and impedance respiration. It can only be used by installing into the input box of the DS-5000 series patient monitor. Vital sign data from the patient are received into this module to perform data filtering and processing. The data display and interactive operations are performed through the main patient monitor.

The HC-530 $tcpO_2/pCO_2$ module is a parameter module to measure a patient's pO_2 and pCO_2 non invasively by inserting the HC-530 into the DS-5000 series input box. The HC-530 retrieves various biological signals from patients, filters those data, and analyzes measurements. The data display and interactive operations are performed on the monitor to which the HC-530 is connected.

Features

HJ-500

- Monitoring Parameters
  - 12-Lead ECG
  - Impedance Respiration
- Includes built-in analog signal output connector
- 12-lead waveform can be recorded on the AU-5500N 8-Channel Recorder connected to the network.
- Utilizes a low noise, high performance 10-lead patient cable. Separate lead cable sets can be used for the chest and limbs.
- Depending on the extent of the patient's condition, the number of leads can be decreased from 10 to 5(3).
- Compact in size, the HJ-500 occupies only 2 slots of DS-5000 series input box.

HC-530

- The electrodes, basic hardware, and algorithm for $tcpO_2/pCO_2$ measurements by Radiometer are used.
- The device compact in size and uses two module slots in the DS-5000 series input box.
- The temperature and monitoring time of the electrode can be set.
- The calibration value and metabolic correction factor, and correct $tcpCO_2$ reading to $PsCO_2$ (37°C) can be set.

Common

・A built-in CPU in the module increases accuracy and measurement speed.
・The module can be upgraded for future technology through an IC card in-stalled in the DS-5000 patient monitor.

⚠CAUTION

- **This device is not intended for use with the IB-7006 of the polygraph system (MCS-7000 System). Do not use the polygraph system module with the DS-5000 System. The device can be damaged and/or safe operation can not be ensured.**
- **This device is not intended for use outside the hospital (including in ambulance), under MRI environment, inside hyperbaric chamber or in the presence of flammable anesthetic gas.**

HJ-500

- **Electrosurgical knives can not be used simultaneously with the HJ-500. When using the electrosurgical knives, disconnect the cables from the HJ-500.**
  High radio frequency energy generated by electrosurgical knives may cause a burn injury at the electrode sites, or may cause damage to the device. There is also a danger of electric shock.
- **When using the HJ-500 and the HS-500 simultaneously, the measurements by the HJ-500 will be given priority. Waveforms and measurements measured by the HS-500 will not be displayed.**
- **For using the HJ-500, proper setting on the DS-5300 bedside monitor is necessary. Set the "HJ-500" to ON for the "MODULE CONFIG." in the pre-set menu. (Refer to the DS-5300 operation manual.)**

Chapter 2

Controls and Functions

HJ-500 ..... **2-1**
Front View 2-1
Rear View 2-2

HC-530 ..... **2-3**
Front View 2-3
Rear View 2-4

Chapter 2 Controls and Functions

HJ-500

●Front View

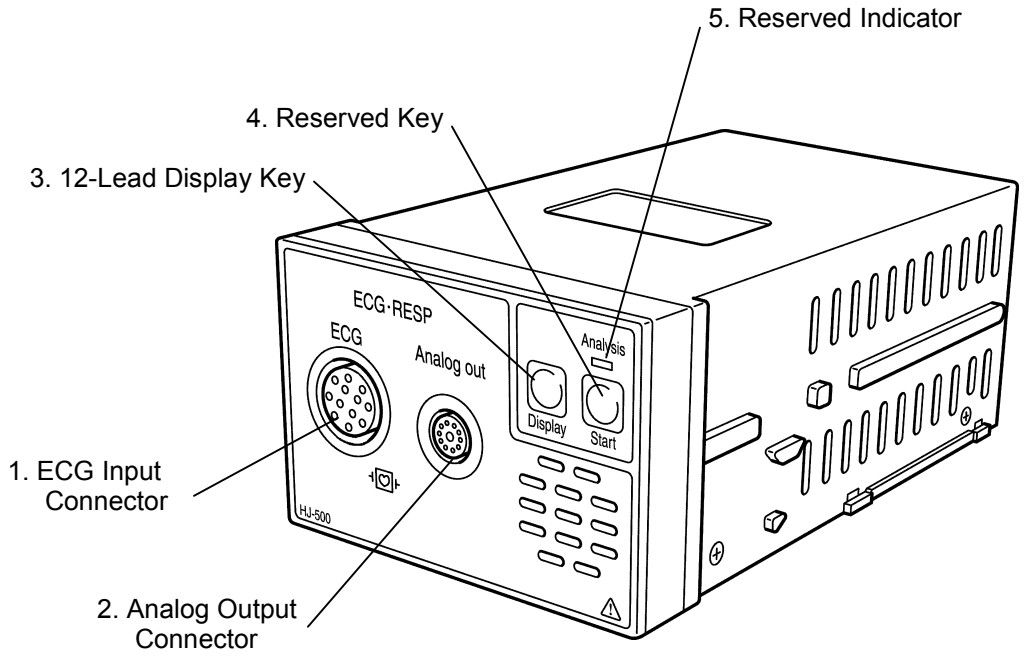

1. ECG Input Connector

Connects the ECG patient cable.

2. Analog Output Connector

Outputs ECG and QRS synchronized pulse.

3. Display :12-Lead Display Key

Pressing this key will show the 12-lead display on the main monitor.

4. Start :Reserved Key

For future use in expanded function.

5. Reserved Indicator

For future use in expanded function.

●Rear View

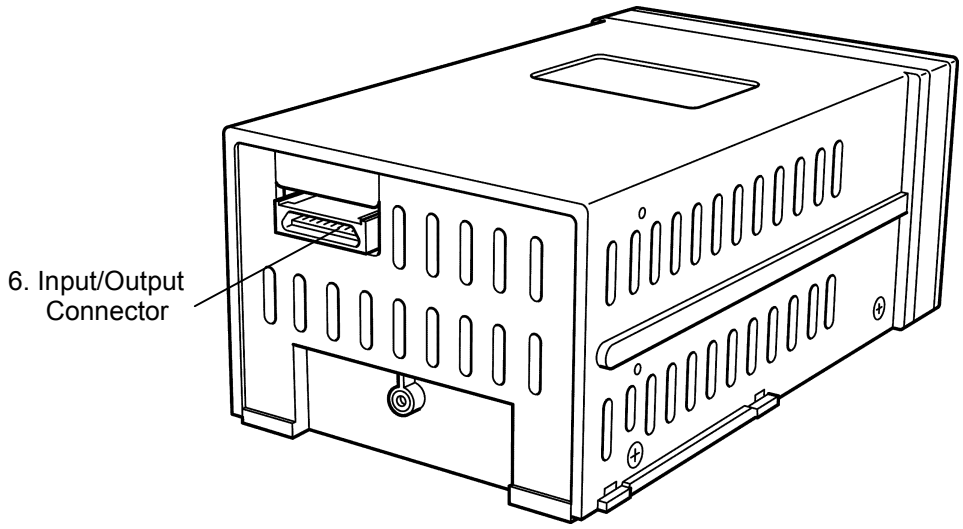

6. Input/Output Connector

Connects to the input box.

HC-530

●Front View

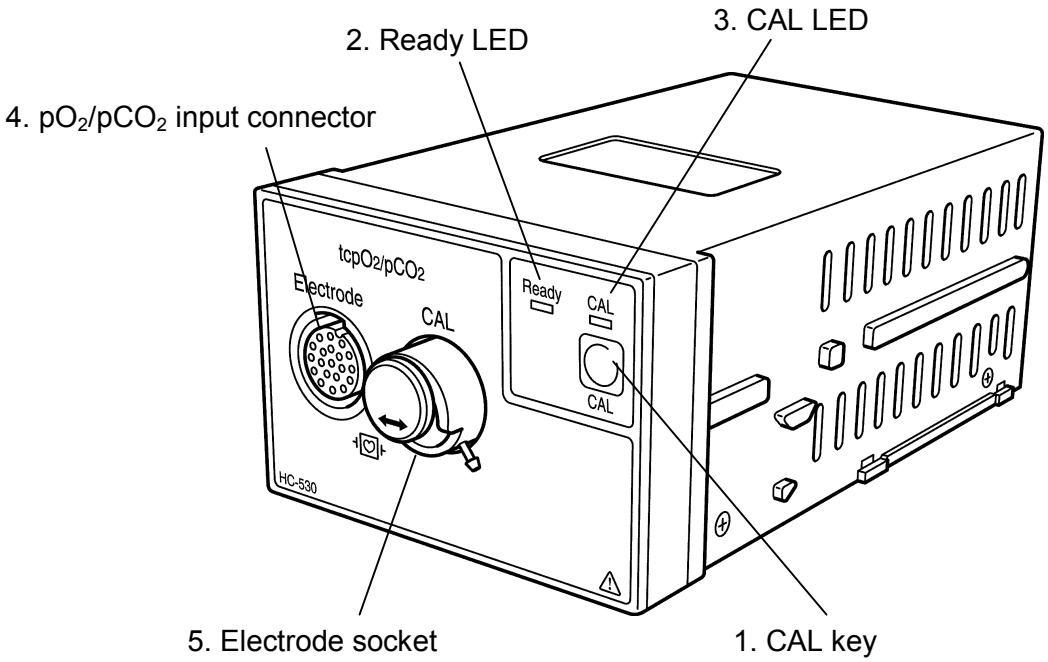

1. CAL : Calibration Key

Push to start calibration of the electrode.

2. Ready LED

Lamp is ON when calibration is completed and ready for the measurement.

3. Calibration LED

Ready for calibration : Lamp is flashing
During calibration : Lamp is ON

4. pO_2/pCO_2 Input connector

Connector for the pO_2/pCO_2 electrode.

5. Electrode Socket

Connect the electrode when performing calibration. Use when connecting the nylon calibration tube to the pipe stub on the TCC3 Calibration Unit.

●Rear View

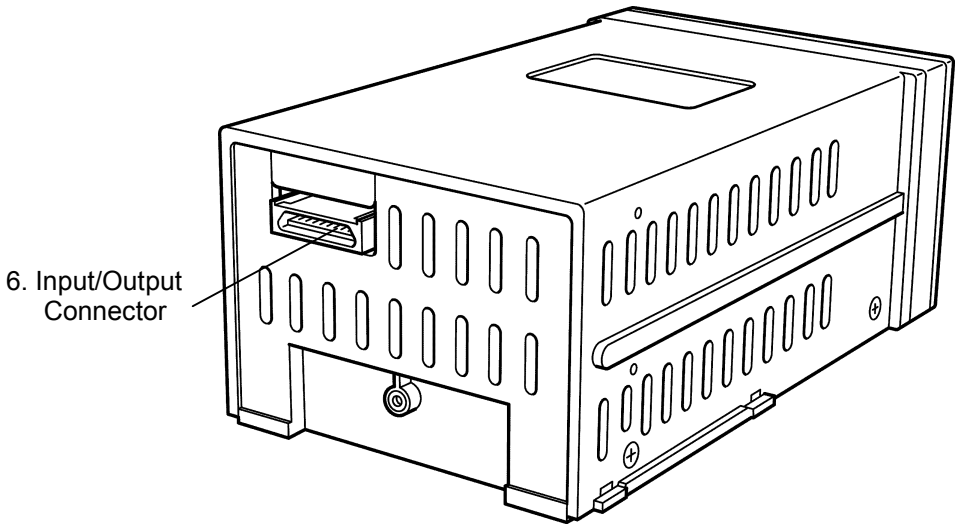

6. Input/Output Connector

Connects to the input box.

Chapter 3

Accessories

Accessories 3-1
HJ-500 3-1
HC-530 3-1

Optional Accessories 3-1
HJ-500 3-1
HC-530 3-1

Chapter 3 Accessories

Accessories

The following accessories are supplied for the HJ-500/HC-530.

HJ-500

・This Operation Manual

HC-530

・The Operation Manual

⚠CAUTION
Specifications are subject to change for quality improvement without prior notice.

Optional Accessories

The following optional accessories are available for purchase.

HJ-500

・10-Lead Relay Cable : # 3499.3414.11 (for other than USA)
3499.3464.11 (for USA only)
・Chest Lead Cable : # 3380.0623.11 (for other than USA)
3380.0673.11 (for USA only)
・Limb Lead Cable : # 3380.0612.17 (for other than USA)
3380.0661.15 (for USA only)
・Interface Cable : CJ-285

HC-530

・Combined tcpO_2/pCO_2 Electrode :E5280
・Membraning Kit :D280
・Fixation Kit :D282
・Calibration Unit :TCC3
・Calibration Gas (20.9%O_2, 5%CO_2)

⚠CAUTION
● **Use only the accessories specified for this equipment. Failure to use the specified accessories may result in improper function or operation.** ● **Specifications are subject to change for quality improvement without prior notice.**

Blank Page

Chapter 4

Preparation

Connection to the Main Monitor 4-1
Installation into the Input Box 4-2
Removal from the Input Box 4-2

Precaution about the HJ-500 4-3

Chapter 4 Preparation

This section describes the procedure to connect the HJ-500/HC-530 to the main patient monitor. For attachment of the patient cable, refer to the corresponding section of this manual.

Connection to the Main Monitor

The HJ-500/HC-530 is used by inserting into the input box connected to the main monitor.
Any 2 slots of the input box can be used for the HJ-500. For each patient monitor, only one HJ-500 /HC-530 can be used.

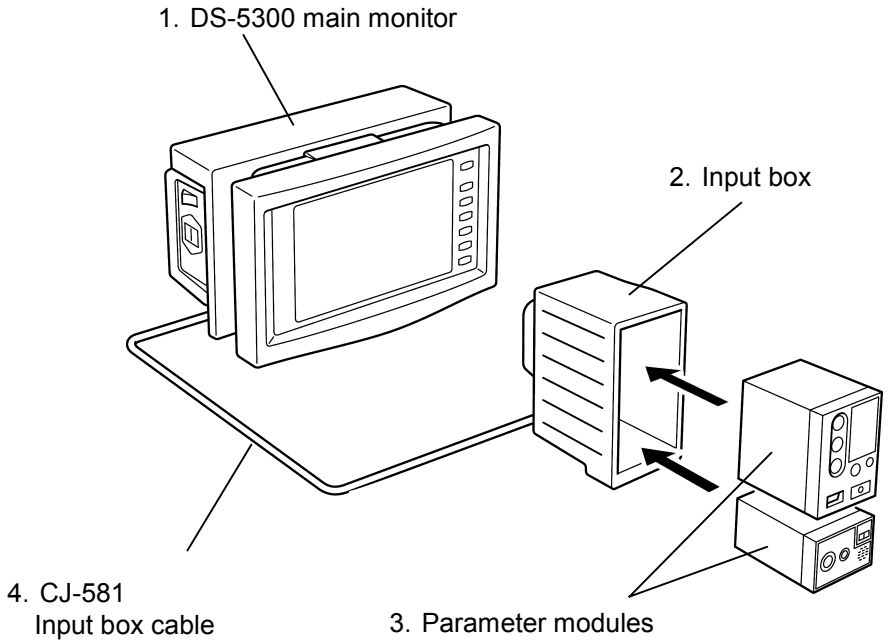

(Example for the use with the DS-5300)

●Installation into the Input Box

1. Insert the HJ-500/HC-530 into the input box in the direction of the arrow as shown below. Push in until a “click” sound is heard. This indicates that it has locked into place.

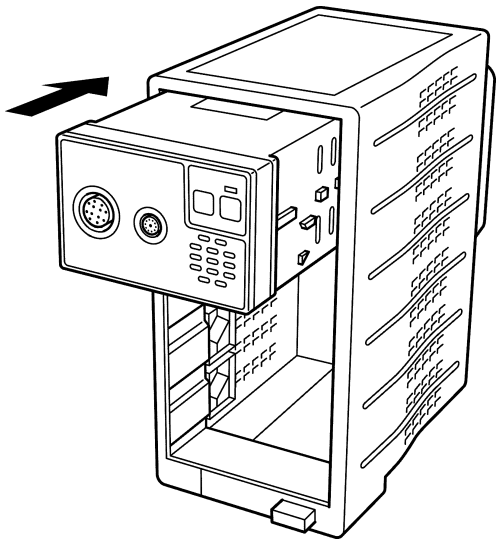

●Removal from the Input Box

1. Press the release button on the input box to release the module lock.
2. Pull out the HJ-500/HC-530 slightly until it stops.
3. Push back in until a lock release sound is heard, and then pull it out completely.

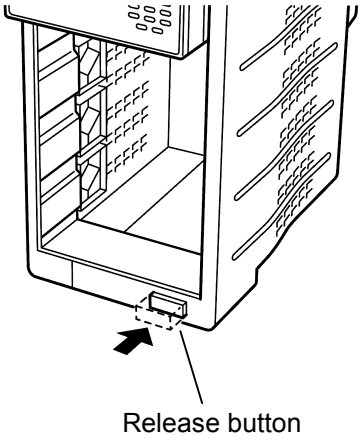

Remove as shown in steps 1, 2, 3.

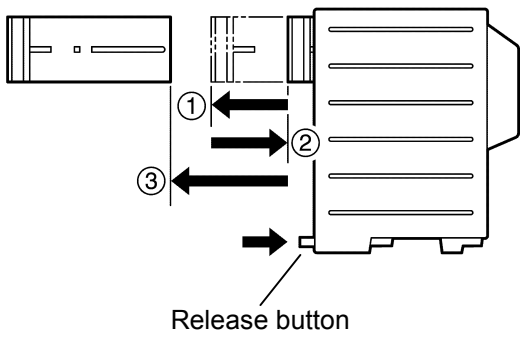

Precaution about the HJ-500

The Before using the HJ-500, proper setting on the DS-5300 bedside monitor is necessary. Set the “HJ-500” to ON for the “MODULE CONFIG.” in the preset menu. If this is set to OFF, the HJ-500 can not be recognized.

In addition, please note that two other parameters should be set to OFF in order to set the HJ-500 to ON. These two parameters can not be monitored when using the HJ-500.

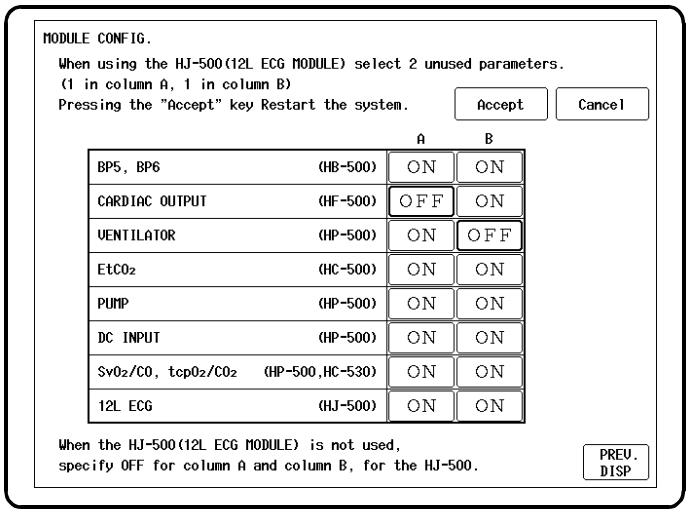

For procedures, please refer to the DS-5300 Operation Manual.
→ “19. System Configuration ▮ Pre-Set Function ● HJ-500 (Unused Parameters)”

Blank Page

Chapter 5

Maintenance

Cautions 5-1
After Using the Equipment 5-1
Cleaning 5-1
Storage 5-1
Maintenance Check 5-1

Cleaning 5-2
Maintenance for transcutaneous Electrode(HC-530) 5-2

Maintenance Check 5-2
Daily Check 5-3
Periodic Check 5-3

Chapter 5 Maintenance

Cautions

●After Using the Equipment

- Unplug the cables carefully. Do not apply excessive force on the cable by pulling on the cord.
- Equipment, accessories, cords should be cleaned and stored together.
- When accessories such as ECG electrodes, cables, membranes or electrode installing kits need to be supplied, please contact your Fukuda Denshi representative.

●Cleaning

- To ensure safety, turn off the power and unplug the power cable before cleaning.
- If the equipment is not cleaned for a while, it will be difficult to remove stains. It is recommended to clean the equipment frequently.
- To prevent injury, we recommend wearing gloves when cleaning.
- Do not allow chemicals to enter the equipment or the connectors.
- Do not immerse in water or detergent.
- Only neutral detergent should be used to clean the cabinet. Do not use chemical cloth, scrub brush, abrasive, polishing powder, hot water, volatile solvent and chemicals such as cleanser, thinner, benzene, synthetic detergent for house and furniture, or a sharp-edged tool. The surface resin coating may be damaged, resulting in discoloration, scratches, and may cause other problems.

●Storage

- Store the equipment away from splashing water.
- Store the equipment where it will not be adversely affected by pressure, humidity, temperature, sunlight, dust, or air containing salt or sulfur.
- Store the equipment at a stable place where there is no inclination, vibration or shock. (including during transportation)

●Maintenance Check

- Periodic maintenance must be performed to ensure proper and safe operation of the equipment.
- If the equipment was left unused for a while, it must be verified that proper and safe operation can be attained before using.

Cleaning

Use a gauze or absorbent cotton cloth dampened with alcohol or neutral detergent to clean the equipment and cables.

⚠CAUTION
When sterilizing the entire room by spraying, do not allow chemicals to enter the equipment or connectors.

●Maintenance for Transcutaneous Electrodes（HC-530）

・Cleaning
Gently wipe the plastic cover of the electrode head and the patient cable using a cloth soaked in alcohol or propyl alcohol. Do not wipe the part which contacts the patient's skin.

・Sterilization
Soak the patient cable in active giardhyde e.g. CIDEX® 2～3% solution.
Do not soak the electrode connector.
Do not sterilize the device using autoclave and ethylene oxide methods.

・Storage
Place the electrode into the protection cap filled with a small amount of electrolyte.

Maintenance Check

The following are the maintenance items that must be carried out for the HJ-500/HC-530.
For maintaining safe and reliable operation of this equipment, the "Daily Check" and "Periodic Check" discussed below must be carried out.
Please note that we are not liable for any damage caused by the lack of maintenance.

⚠CAUTION
● **Do not open the cabinet.** ● **Do not allow liquid such as alcohol to enter the equipment.**

●Daily Check

The daily check must be performed according to the “Daily Check List”.

●Periodic Check

A periodic check of medical electronic equipment is mandatory to prevent failures and accidents and to ensure safety and reliability.

Periodic maintenance may be performed by each medical institution or by a third party by concluding a “Maintenance Contract”.

For further details, please contact Fukuda Denshi.

Daily Check List

No._____

Date_____ Checker_____ Location_____

Device HJ-500 S/No._____ Date of Purchase_____

Item	Details	Criteria	Judgement
Appearance	Visually check for any damage, cracks, deformity, rust, etc on the exterior surface.	There should be no abnormality.	OK/NG
Installation	Verify that the device is installed in a stable place.	There should be no inclination, vibration, or shock.	OK/NG
	Verify that the device is installed in a place free from any adverse environmental effect.	It should satisfy the required condition of pressure, temperature and humidity. It should be placed away from splashing water.	OK/NG
Function	Turn on the monitor and check that it functions properly.	ECG waveform is properly displayed by connecting the lead cable and relay cable.	OK/NG
		12-Lead Display should appear when the **Display** key is pressed.	OK/NG
Cables	Visually check for any damage.	There should be no damage.	OK/NG
Periodic Check	Check the last date when the periodic check was performed.	It should be within 1 year.	OK/NG

Comments

Daily Check List

No. _____

Check date _____ Checker _____ Installation location _____

Device name: HC-530 S/No. _____ Purchase date _____

Item	Details of the check	Criteria	Judgment
Appearance	Visually check for any damage, cracks, deformity, rust, etc. on the outer enclosure.	No abnormality.	☐OK / ☐NG
Installation	Check that the device is installed in a safe place.	The place is free from inclination, vibration or impact, etc.	☐OK / ☐NG
	Check that the device is installed in a place free from any adverse environmental effect.	The installation satisfies the specifications for atmospheric pressure, temperature, humidity, etc. The installation place is away from splashing water.	☐OK / ☐NG
Function	Turn on the power and check to make sure operation is normal.	Prepare for calibration. Pressing the CAL key starts calibration.	☐OK / ☐NG
		While Ready LED is ON, monitoring can be started when the electrode is removed from the socket.	☐OK / ☐NG
Power cord	Visually check for any damage.	No damage should be found.	☐OK / ☐NG
Periodic check	Check the date of previously performed periodic check.	Should be within the last 3 years.	☐OK / ☐NG

Comments

Periodical Check

No._____.

Item		Inspection Method & Criteria	Judgment	Remarks (Need Repairing)
Visual Check				
Cords, Accessories	1. Interface Cable	Check visually and conduct wiring test.	☐OK / ☐NG	
	2. Electrodes	Check storage conditions.	☐OK / ☐NG	
	3. Operation Manual	Must be kept as specified.	☐OK / ☐NG	
Appearance	1. Flaws, Cracks, Deformation and Rust	Must be free from damage.	☐OK / ☐NG	
	2. Panel and Label	Must not be damaged, scratched or erased.	☐OK / ☐NG	
	3. Key, LED, etc.	Must be free from damage.	☐OK / ☐NG	
Mechanical Check				
Module	1. Key	Must operate property.	☐OK / ☐NG	
	2. Input Connector	Must perform normally.	☐OK / ☐NG	
Installation into the Input Box	1. Lock	Must perform normally.	☐OK / ☐NG	
Electrical Check				
Function	1. Sensitivity, ECG	The accuracy must be within ±10% at 10mm/mV.	☐OK / ☐NG	
	2. Time Constant	Must be 0.3s and over at Monitor 2 mode.	☐OK / ☐NG	
	3. Sensitivity of Analog ECG Signal	The accuracy must be within ±10% at 1V/mV.	☐OK / ☐NG	
	4. QRS Synchronized Signal	Must be output of TTL Level.	☐OK / ☐NG	
	5. Sensitivity, Respiration	The accuracy must be within ±20% at 1mm/Ω.	☐OK / ☐NG	
Safety Check				
Leakage Current	1. Enclosure Leakage Current (N.C.)	Less than 0.1mA	☐OK / ☐NG	
	2. Enclosure Leakage Current (S.F.C.)	Less than 0.5mA	☐OK / ☐NG	
	3. Patient Leakage Current I (N.C)	Less than 0.01mA	☐OK / ☐NG	
	4. Patient Leakage Current I (S.F.C.)	Less than 0.05mA	☐OK / ☐NG	
	5. Patient Leakage Current III (S.F.C.)	Less than 0.05mA	☐OK / ☐NG	
	6. Patient Auxiliary Current (N.C)	Less than 0.01mA	☐OK / ☐NG	
	7. Patient Auxiliary Current (S.F.C.)	Less than 0.05mA	☐OK / ☐NG	
Withstanding Voltage	1. Between Isolated Applied Part and Primary	AC 4kV/1min	☐OK / ☐NG	
	2. Between Isolated Applied Part and Enclosure	AC 1.5kV/1min	☐OK / ☐NG	
Total Judgment			☐OK / ☐NG	

Unit Name	12ECG･RESP Module	Model No.	HJ－500	Serial No.	
Installation Location			Date of Purchase		
Check Date		Inspected by		Approved by	

Periodical Check

No._____.

Item		Inspection Method & Criteria	Judgment	Remarks (Need Repairing)
Visual Check				
Cords, Accessories	1. tcp Electrode	No damage should be found.	☐OK / ☐NG	
	2. Accessories for Electrode	Check storage conditions.	☐OK / ☐NG	
	3. Operation Manual	Must be kept as specified.	☐OK / ☐NG	
Appearance	1. Flaws, Cracks, Deformation and Rust	Must be free from damage.	☐OK / ☐NG	
	2. Panel and Label	Must not be damaged, scratched or erased.	☐OK / ☐NG	
	3. Key, LED and Other	Must be free from damage.	☐OK / ☐NG	
Mechanical Check				
Module	1. Key	Must operate property.	☐OK / ☐NG	
	2. Input Connector	Must perform normally.	☐OK / ☐NG	
Installation into the Input Box	1. Lock	Must perform normally.	☐OK / ☐NG	
Electrical Check				
Function	1. CAL LED	Must light when the cable is connected and electrode is attached to the socket.	☐OK / ☐NG	
	2. Calibration	The calibration must be properly performed by pressing the CAL key on the HC-530.	☐OK / ☐NG	
	3. Electrode Attachment Time	After calibration, remove the electrode from the socket and set the electrode site time to 30 min. "SITE TIME OVER" must be displayed when 30 minutes have elapsed.	☐OK / ☐NG	
	4. Electrode Heating Control	The accuracy must be within ±0.1°C.	☐OK / ☐NG	
	5. Cable Detection	The data must disappear when the cable is unplugged.	☐OK / ☐NG	
Safety Check				
Leakage Current	1. Enclosure Leakage Current (N.C.)	Less than 0.1mA	☐OK / ☐NG	
	2. Enclosure Leakage Current (S.F.C.)	Less than 0.5mA	☐OK / ☐NG	
	3. Patient Leakage Current I (N.C.)	Less than 0.01mA	☐OK / ☐NG	
	4. Patient Leakage Current I (S.F.C.)	Less than 0.05mA	☐OK / ☐NG	
	5. Patient Leakage Current III (S.F.C.)	Less than 0.05mA	☐OK / ☐NG	
Withstanding Voltage	1. Between Isolated Applied Part and Primary	AC 4kV/1min	☐OK / ☐NG	
	2. Between Isolated Applied Part and Enclosure	AC 1.5kV/1min	☐OK / ☐NG	
Total Judgment			☐OK / ☐NG	

Unit Name	$tcpO_2/pCO_2$ Module	Model No.	HC－530	Serial No.	
Installation Location			Date of Purchase		
Check Date		Inspected by		Approved by	

Blank Page

Chapter 6

Troubleshooting

12ECG·RESP(HJ-500) 6-1

$TcpO_2$/pCO_2(HC-530) 6-4

Chapter 6 Troubleshooting

Following are some of the troubles that may occur when using this equipment. There might also be other troubles related to the patient monitor. In all cases, please reference the operation manual for the patient monitor.

⚠CAUTION
If any damage occurs to the system, do not attempt repair. Label the unit "OUT OF ORDER".

12ECG /RESP (HJ-500)

Waveforms and numeric values are not displayed.

Cause : On the DS-5300, HJ-500 is set to OFF for the "MODULE CONFIG." in the preset menu.
Solution : Set HJ-500 to ON for the "MODULE CONFIG." in the preset menu of the DS-5300. For procedures, refer to the operation manual for the DS-5300

ECG waveforms and numeric values are not displayed when 3-lead cable is connected.

Problem : A baseline and a "LEAD OFF" message is displayed.
Cause : 5 or 10-lead cable is set for the lead cable type.
Solution : On the DS-5300, set the "HJ-500 3LEAD" to ON in the ECG configuration menu.

⚠CAUTION
When selecting 10 or 5-lead cable again, set the "HJ-500 3LEAD" to OFF. Otherwise waveforms for 10 or 5-lead cable can not be monitored.

Chest lead is not displayed when 5(10)-lead is connected.

Problem : On the 12-lead display, ECG waveform is displayed for only 1 lead from lead I, II, or III.
Cause : 3-lead cable is set for the lead cable type.
Solution : On the DS-5300, set the "HJ-500 3LEAD" to OFF in the ECG configuration menu.

Artifacts are interfering with the ECG waveform.

Problem : AC noise is interfering.
Cause : Electrodes are not attached properly. Electric blankets or other noise generating factor is used near the patient.
Solution : Attach the electrodes properly. Verify that lead cables are not damaged. Keep noise generating factors away from the patient. Turn on the AC filter if necessary.

⚠CAUTION
Turning on the AC filter may reduce or distort the QRS amplitude.

Problem : Electromyogram is interfering.
Cause : Electromyogram may interfere depending on the electrode placement.
Solution : Relocate the electrodes where the electromyogram will not interfere. Set the waveform mode to monitor mode if necessary.

⚠CAUTION
When in the monitor mode, QRS amplitude may be reduced or distorted.

Heart rate is not counted.

Problem : Heart rate is not counted.
Cause : ECG amplitude is too low to detect QRS.
Solution : Relocate the electrodes, or use the manual QRS detection to adjust the threshold level. When using automatic QRS detection, the threshold level can be reduced if the waveform size is increased on the patient monitor.

⚠CAUTION
Manual QRS detection is effective for low amplitude, but erroneous detection is likely to occur in presence of excessive artifacts. It is recommended to relocate the electrodes and increase the amplitude instead.

Problem : "LEAD OFF" is displayed.
Cause : Electrodes have fallen off, or not making good contact on the skin.
Solution : Make sure the electrodes are properly attached. Change the electrode position if necessary. Verify that the lead cable is not defective.

⚠CAUTION
If the automatic lead switching function is ON, the lead will automatically switch to another lead when a "LEAD OFF" condition continues, and will return to the original lead when the "LEAD OFF" condition is resolved.

"CVA" is displayed.

Problem : The ECG waveform is superimposed on the respiration waveform. Heart rate is equal to the respiration rate.
Cause : ECG artifact is interfering.
Solution : Change the electrode position where it will not be affected by ECG artifact.

"RESP LOW" is displayed.

Problem : The amplitude of the respiration waveform is low.
Cause : The amplitude of the respiration waveform is below 0.2Ω.
Solution : Change the electrode position so the amplitude will increase.

Respiration is not counted.

Problem : "0" is displayed for the respiration rate.
Cause : The amplitude of the respiration waveform is below the range of the automatic respiration detection threshold.
Solution : Change the electrode position, or adjust the threshold level on the manual respiration detection. For automatic detection, the threshold level can be lowered by increasing the waveform size on the patient monitor.

⚠CAUTION

- **Manual QRS detection is effective for low amplitude, but erroneous detection is likely to occur in the presence of excessive artifacts. It is recommended to relocate the electrodes and increase the waveform amplitude before using the Manual QRS detection method.**
- **As respiration detection by impedance method uses the same electrodes used for ECG, respiration rate may not be properly detected if a "LEAD OFF" message is displayed or if an electrode condition is unstable.**

$TcpO_2$/ pCO_2 (HC-530)

Cannot install the software to the module.

Condition : I/F Board dip switch SW 1~4 are normally OFF and turned ON when trying to install the software.

With SW 1~4ON, boot program install can be performed, return to OFF after installation.
With SW 1~4 OFF check the following.

Condition : Software install cannot be performed.
Cause 1 : I/F Board is defective.
Solution : Check I/F Board, replace if necessary.

Cause 2 : IB-5006 mother board is defective.
Solution : Check IB-5006 mother board, replace if necessary.

Cause 3 : CJ-581 cable is defective.
Solution : Reconnect the CJ-581, replace if necessary.

Numeric values are not displayed.

Cause : On the DS-5300, HC-530 is set to OFF for the "MODULE CONFIG." in the preset menu.
Solution : Set HJ-500 to ON for the "MODULE CONFIG." in the preset menu of the DS-5300. For procedures, refer to the operation manual for the DS-5300

Readings drift constantly without any physiological causes when electrodes are applied to the patient.

Cause : Improper attachment of the electrode.
Solution : Detach the electrodes and ensure correct application.

Readings not stable or out of limits 20 minutes after application.

Cause1 : Patient status unstable.
Solution : Check patient's condition.

Cause 2 : Inadequate vasodilatation.
Solution : See the condition of the patient.

Cause 3 : Improper attachment of the electrode.
Solution : Reattach the electrode.

Readings change suddenly without any physiological cause.

Cause : Artifact due to patient movement.
Solution : Recalibrate and reapply electrode to the skin, possibly, selecting a new measuring site.

Noise appears on the readout.

Cause : Interference from nearby equipment.
Solution : Increase the distance from the interfering equipment.

Monitor not operational. No display.

Cause 1 : Monitor defective.
Solution : Contact service.

Cause 2 : Electrode not properly connected.
Solution : Check the connection.

pO_2 or pCO_2 measured value is not displayed.

Cause : Parameter pO_2 or pCO_2 has been rejected in calibration.
Solution : Continue as a single parameter electrode. Check calibration values and gas supply. Re-membrane and change electrode.

"WARM UP ERROR" is displayed.

Cause 1 : The electrode has not reached the preset temperature within 3 minutes.
Solution : Recalibrate. If the monitor still rejects the electrode, replace it with a new one.

Cause 2 : Defective electrode.
Solution : Replace the electrode.

"SIGNAL RANGE ERROR" is displayed.

Cause 1 : The electrode signal range not acceptable.
Solution : Recalibrate. If error persists, re-membrane and recalibrate.

Cause 2 : Setting of calibration value is incorrect .
Solution : Check the value and recalibrate.

Cause 3 : Membrane has not been changed regularly.
Solution : Re-membrane and recalibrate.

Cause 4 : Unsuccessful memebraning.
Solution : Re-membrane.

Cause 5 : Poor supply of calibration gas.
Solution : Check the gas source and connection.

Cause 6 : Defective electrode
Solution : Replace the electrode.

"STABILITY ERROR" is displayed.

Cause 1 : Electrode stability not acceptable.
Solution : Recalibrate. If error persists, re-membrane and recalibrate.

Cause 2 : Membrane has not been changed regularly.
Solution : Re-membrane and recalibrate.

Cause 3 : Unsuccessful membraning.
Solution : Re-membrane.

Cause 4 : Poor supply of calibration gas.
Solution : Check the gas source and connection.

Cause 5 : Defective electrode.
Solution : Replace the electrode.

"MEMBRANE ERROR" is displayed.

Cause : After the calibration, no change in CO_2 signal is detected when the electrode is removed from the socket.
Solution : Recalibrate. Change electrode.

"POWER ERROR" is displayed.

Cause 1 : Power consumption of the electrode has exceeded 600mW for more than 2 minutes due to the low ambient temperature.
Solution : Raise the ambient temperature and recalibrate.

Cause 2 : Defective electrode
Solution : Replace the electrode.

"TEMP ERROR HARD" is displayed.

Cause : Defective electrode
Solution : Replace the electrode.

“TEMP RANGE ERROR” is displayed.

Cause 1 : The temperature of the electrode is below 5°C due to the low ambient temperature.
Solution : Raise the ambient temperature and recalibrate.

Cause 2 : Defective electrode
Solution : Replace the electrode.

“HEAT ERROR” is displayed.

Cause : Defective module.
Solution : Inform service.

“TEMP DIFF ERROR” is displayed.

Cause : Defective electrode
Solution : Replace the electrode.

The red lamp flashes and the unit “beeps”.

Cause : Low batteries.
Solution : Calibration can still be carried out. Replace the batteries.

The red lamp is lit for 3 seconds and the unit “beeps”.

Cause : Batteries are exhausted.
Solution : Change batteries.

No light when the ▶ button is pressed.

Cause : Batteries are not installed.
Solution : Install batteries.

Blank Page

Chapter 7

Specifications

Chapter 7 Specifications

⚠CAUTION
For quality improvement, specifications are subject to change without prior notice.

Size（mm）

60.0(H)×90.0(W)×150.0(D)
✳ not including the protrusions.

Weight

HJ-500 0.4kg
HC-530 0.3kg

Module Slots

2 slots（contained in IB-5006 Input Box）

Environmental Condition

Operating Temperature	:	10～40℃
Operating Humidity	:	30～85%（no dew condensation）
Storage Temperature	:	－10～60℃
Storage Humidity	:	10～95%（at 60℃）

Safety

Standards	:	JIS T 1001 (General Requirements for Safety of Medical Electrical Equipment) IEC60601-1 (Medical Electrical Equipment, Part 1 General Requirements for Safety)
Electrical Shock Protection	:	Class Ⅰ, Type CF (in combination of DS-5300 and IB-5006)

Input Box Interface

Connection	:	CJ-581 Exclusive Cable
Communication	:	Baud Rate 1Mbps Protocol HDLC
Power Voltage	:	DC24V±10%
Power Consumption	:	HJ-500 10VA（max.） HC-530 30VA(max.)

Monitoring Parameters

HJ-500
ECG（12ch）
Respiration

HC-530
TcpO2
TcpCO2
Electrode Heat
Electrode Temperature

Analysis (HJ-500)

Parameter Measurements
Arrhythmia Analysis
ST Measurement

Operation Keys

HJ-500

Display (12-Lead Display)

Start (Reserved key for extended use.)

HC-530

CAL (Calibration)

Functions

Host Program Boot Function (from monitor to flash memory)

ECG (HJ-500)

Input Impedance	:	above 10MΩ
Polarization Voltage	:	±300mV
HR Measurement Range	:	12 ~ 300bpm (Adult/Child) 30 ~ 300bpm (Neonate)
Lead Selections	:	12 leads : 10 electrodes （I, II, III, aVR, aVL, aVF, V1, V2, V3, V4, V5, V6） 7 leads : 5 electrodes （I, II, III, aVR, aVL, aVF, V）
Frequency Characteristics	:	0.05 ~ 100Hz 0.05 ~ 40Hz 0.5 ~ 40Hz

Respiration (HJ-500)

Measurement Method	:	Impedance Method
Maximum Input	:	above 3Ω
RR Measurement Range	:	4 ~ 150Bpm
Frequency Characteristics	:	0.15 ~ 2.5Hz (Child) 0.15 ~ 1.5Hz (Adult)

Monitor pO_2 Channel（HC-530）

Measurement Range	: 0 ~ 800mmHg (0 ~ 100kPa)
Precision	: ±2mmHg (±0.3kPa) (0 ~ 200mmHg, except electrode)
Polarization Voltage	: －680mV

Monitor pCO_2 Channel（HC-530）

Measurement Range	: 5 ~ 200mmHg (0.7 ~ 26kPa)
Precision	: ±2mmHg (±0.3kPa) (5 ~ 100mmHg, except electrode)

Electrode Heat（HC-530）

Range	: 0 ~ 650mW
Accuracy	: ±10% of reading

Electrode Temperature（HC-530）

Setting	: 37.0°C, 41.0°C ~ 45.0°C (0.5°C intervals)
Accuracy	: ±0.1°C
Wearing Time Range	: 30 minutes ~ 8 hours (30 minutes intervals)

Blank Page

Chapter 8

Circuit Description

BLOCK DIAGRM（HJ-500） 8-1

Circuit Description（HJ-500） 8-6
HJ-500Theory of Operation 8-6
HJAMP Theory of Operation 8-7
HJRESP Theory of Operation 8-8
HJCPU Theory of Operation 8-9
HJPWR Theory of Operation 8-11

BLOCK DIAGRM（HC-530） 8-12

Circuit Description（HC-530） 8-13
HJ-500Theory of Operation 8-13
PCB-6619 TCP Board 8-14
PCB-6597 I/F Board 8-16
Electrode Error Processing（HC-530） 8-18

Chapter 8 Circuit Description

BLOCK DIAGRAM（HJ-500）

●HJ-500

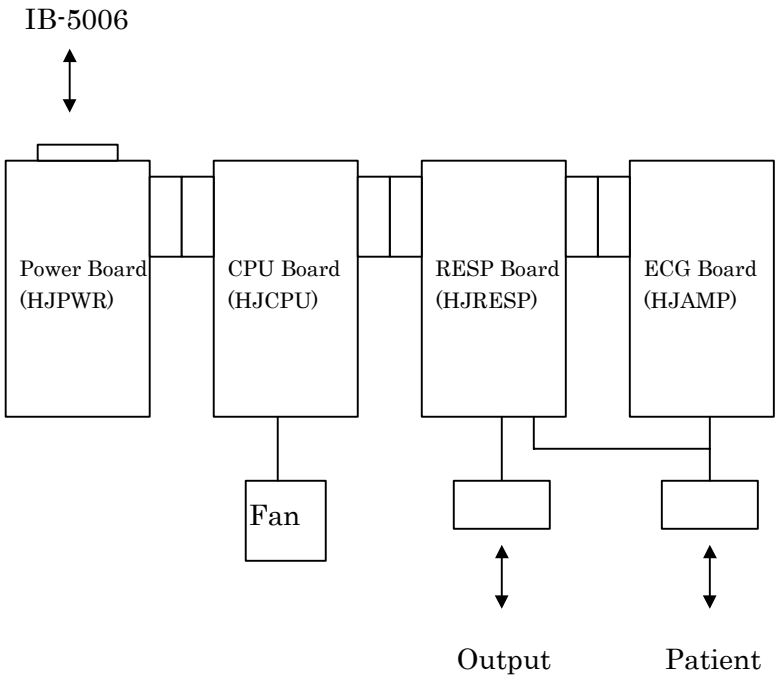

●HJAMP

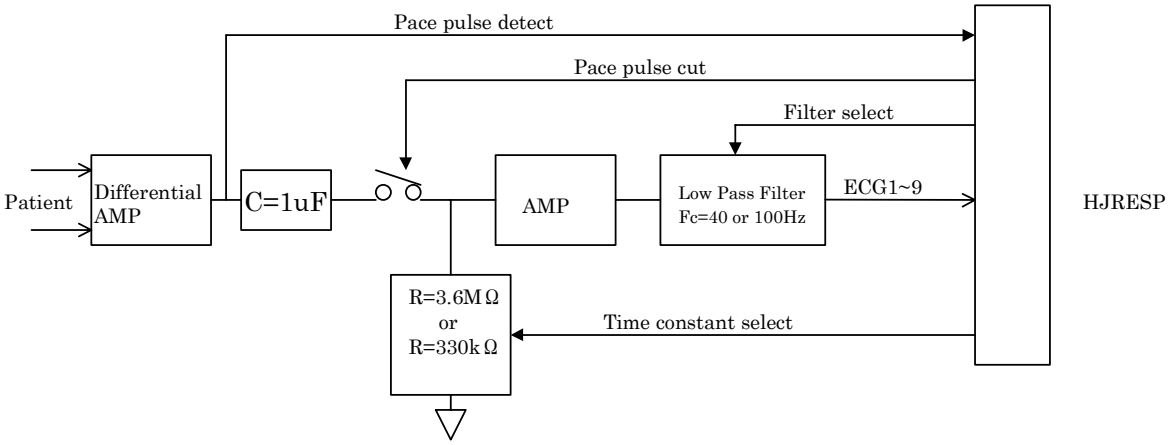

Note: The above circuit is provided for each of nine leads: I, II, III, V1, V2, V3, V4, V5, and V6.

●HJRESP

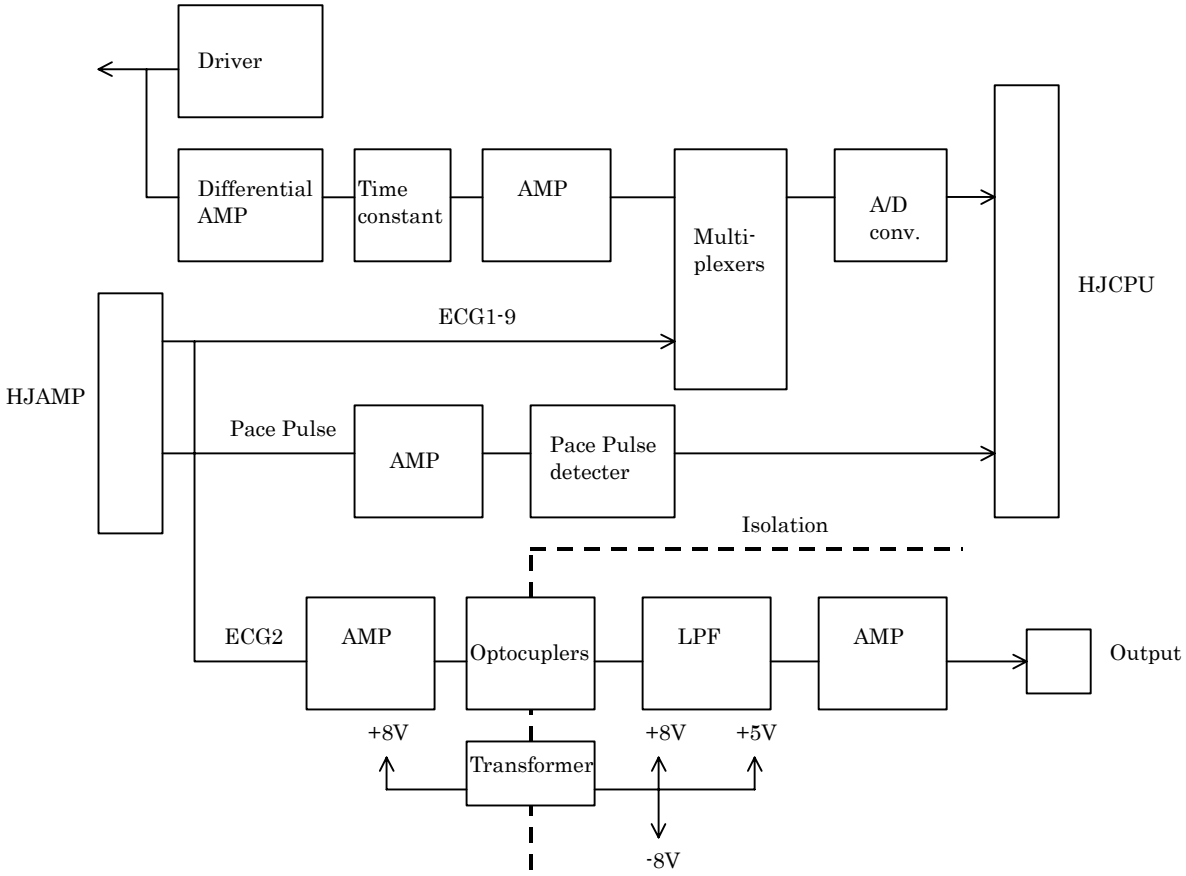
Driver
Differential AMP
Time constant
AMP
Multi-plexers
A/D conv.
HJCPU
ECG1-9
HJAMP
Pace Pulse
AMP
Pace Pulse detecter
Isolation
ECG2
AMP
Optocuplers
LPF
AMP
Output
+8V
+8V
+5V
Transformer
-8V

●HJCPU

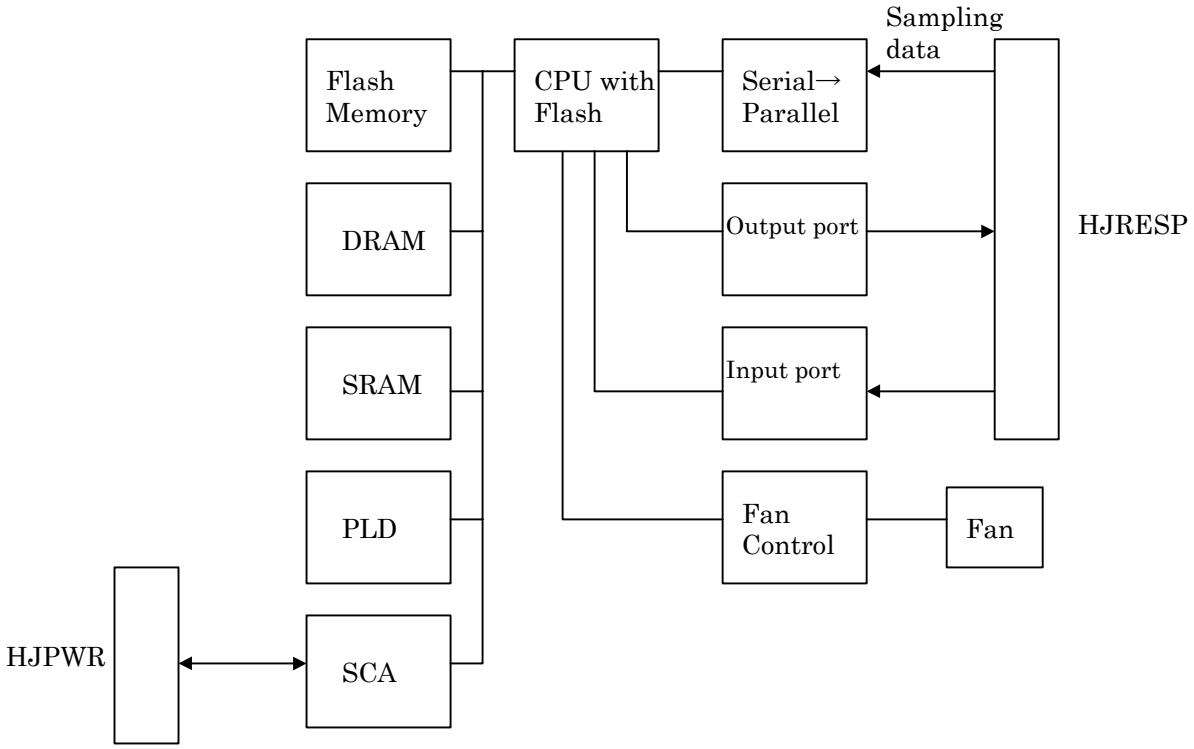
Sampling
data
Flash
Memory
CPU with
Flash
Serial→
Parallel
DRAM
Output port
HJRESP
SRAM
Input port
PLD
Fan
Control
Fan
HJPWR
SCA

●HJPWR

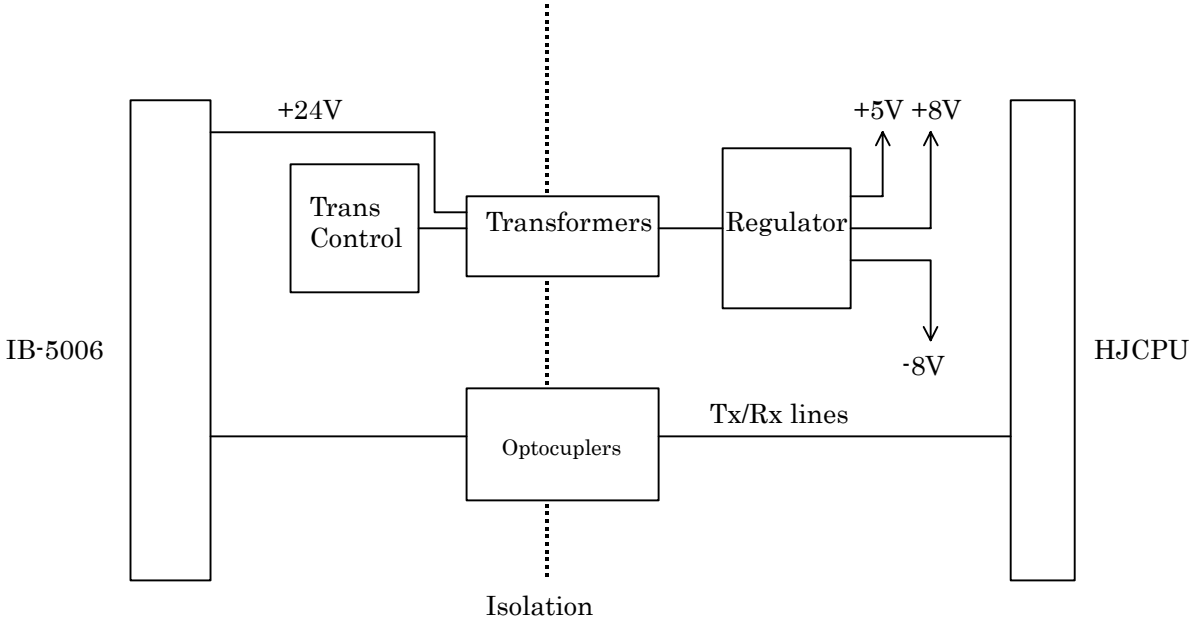
+24V
+5V +8V
Trans
Control
Transformers
Regulator
IB-5006
-8V
HJCPU
Tx/Rx lines
Optocuplers
Isolation

Circuit Description（HJ-500）

●HJ-500 Theory of Operation

The HJ-500 is a 12-lead electrocardiograph module operating with the DS-5000 series monitor system.
The HJ-500 is a parameter module installed in the IB-5006 to monitor the 12-lead electrocardiograph and impedance respiration.
The HJ-500 receives biological signals from the patient to perform data filtering and measurements. The monitor displays the monitoring results and permits various controls to be performed.

The HJ-500 incorporates a CPU and its peripheral circuits.
Analog signals are amplified and converted to digital signals, and the digital signals are processed by the CPU.
Both analog and digital filters are provided to filter parameters.
The module performs numeric measurements of the measured parameters.

The CPU in the HJ-500 performs the following processes:
- ･Measurement of heart rate and respiration
- ･Processing of augmented vector waveforms (aVR, aVL, and aVF leads)
- ･Processing of 12-lead-ST measurement results and average ST waveform
- ･Detection of disconnected electrodes
- ･LED illumination

The monitor performs the following processes:
- ･ Alarm process
- ･ Arrhythmia process

Communication for numeric data and waveform data is performed using HDLC protocol at a transmission speed of 1 Mbps.
The monitoring condition (filters, time constant, etc.) is received from the monitor to the HJ-500 using the same HDLC protocol and speed.

The module contains FLASH memory and can be upgraded through the monitor from data stored on an IC card.

Isolation is contained on the HJ-500 HJPWR Board.

The HJ-500 has one key and one LED on the front panel. These are for 12-lead display.

●HJAMP Theory of Operation

The HJAMP incorporates ECG amplifiers.

(HJAMP Circuit Diagram (Page 1))
CN1 is an interface connector for the HJRESP.
CN2 and CN5 are interface connectors for leads.
CN3 is an interface connector for RESP.

(HJAMP Circuit Diagram (Page 2))
This circuit includes the ECG input buffer and RF drive buffer.
This circuit does not amplify the signals.

(HJAMP Circuit Diagram (Page 3))
This circuit includes the differential amplifiers for leads I, II, and III. The amplification factor is 5. If a pacing pulse is detected in the waveform that has passed the differential amplifiers, it is suppressed for 10 ms. This circuit performs switching for the use of three-electrode leads.
The LEAD_SEL signal is used for switching as follows:
0h: 3-electrode lead III
1h: 3-electrode lead II
2h: 3-electrode lead I
3h: 10-electrode or 5-electrode lead

(HJAPMP Circuit Diagram (Page 4))
This circuit includes the differential amplifiers for leads V1, V2, and V3. The amplification factor is 5. If a pacing pulse is detected in the waveform that has passed the differential amplifiers, it is suppressed for 10 ms.

(HJAMP Circuit Diagram (Page 5))
This circuit includes the differential amplifiers for leads V4, V5, and V6. The amplification factor is 5. If a pacing pulse is detected in the waveform that has passed the differential amplifiers, it is suppressed for 10 ms.

(HJAMP Circuit Diagram (Page 6))
This circuit amplifies the waveform of each lead by a factor of 40.

(HJAMP Circuit Diagram (Page 7))
This circuit switches between time constants. The time constant is set to 3.2 s when HPF005H is high and 330 ms when HPF005H is low. This circuit controls the INST signal. INST is selected when one of INST1 to INST9 is low.

(HJAMP Circuit Diagram (Page 8)
This is a secondary low pass filter (LPF). The pass frequency is 40 Hz when LPF40H is high and 100 Hz when it is low.

(HJAMP Circuit Diagram (Page 9))
This circuit switches between electrodes subject to detection of high impedance or electrode disconnect. The associated electrode is selected according to the value of LD_CNT0-3 as follows:
0h: RA 1h: LA 2h: LF 3h: C1 4h: C2
5h: C3 6h: C4 7h: C5 8h: C6

(HJAMP Circuit Diagram (Page 10))
This diagram shows how unused gates are dealt with.

●HJRESP Theory of Operation

The HJRES incorporates the RESP detection circuit, pacing pulse detection circuit, A/D switching MPX, and external output circuit.

(HJRESP Circuit Diagram (Page 1))
CN302 is an interface connector for the HJCPU.
CN304 is an interface connector for the HJAPM.

(HJRESP Circuit Diagram (Page 2))
This is an RESP detection circuit.
The drive frequency is 65.5 kHz. The drive current is 50 μA.
This circuit amplifies the signal to be 200 mV/Ω at TP301.
The analog circuit has a frequency characteristic of about 3.5 Hz. The time constant is 1.5 s. RESP is installed when RESP INST goes low.

(HJRESP Circuit Diagram (Page 3))
This is a pacing pulse detection circuit. The frequency characteristic is 200 Hz to 20 kHz. The amplification factor is 80. The detection range is ±200 mV.

(HJRESP Circuit Diagram (Page 4))
This is an MPX circuit for A/D switching.
The AD_MPX0 to AD_MPX3 signals are set as follows:
0h: I 1h: II 2h: III 3h: V1 4h: V2 5h: V3
6h: V4 7h: V5 8h: V6 9h: RESP Ah: Disconnected electrode

(HJRESP Circuit Diagram (Page 5))
This circuit consists of an LTC1418CS (A/D converter).
The LTC1418CS is a 14-bit A/D converter. The resolution is 3.125 μV (for ECG); 3.125 mΩ (for RESP). The sampling speed is 2 ms.

(HJRESP Circuit Diagram (Page 6))
This is an external output circuit.
The output pins are isolated and the dielectric withstand strength is 4 kV.
The output signals are the positive and negative logic signals of lead II and RSNC.
The ECG output level is 1 V/mV and the output passes through the quintic LPF (fc = 20 Hz).
Both positive and negative logic of RSYNC are TTL-level outputs with a width of 100 ms.

(HJRESP Circuit Diagram (Page 7))
This diagram shows how unused gates are dealt with.

●HJCPU Theory of Operation

The HJCPU board incorporates a CPU, an SCA, memory, and so on.

(HJCPU Circuit Diagram (Page 1))
CN504 is an interface connector for the HJRESP board.
CN507 is an interface connector for the HJPWR board.
CN502 is an interface connector for the panel switches.
CN505 is a connector for test and debugging.

(HJCPU Circuit Diagram (Page 2))
A Hitachi single-chip RISC microcomputer SH7045 (HD64F7045) is used as the CPU.
Mode 2 (built-in ROM enabled) is selected as the operation mode.
The CPU receives an 8 MHz clock input and internally converts the clock frequency to 16 MHz.
The CPU internal modules include:

(1) Timer output
ch0: RESP drive clock = 131.147 kHz

(2) I/O
USER_MODEL: Goes low when writing data into the built-in flash memory. (Normally high)
PACE_INST: Opens the ECG signal line. (Not used at present)
LED1 to 4: LED's for debugging
LPF40H: Switches between LPF frequencies 40 Hz (high) and 100 Hz (low).
HPF005H: Switches between time constants 3.2 s (high) and 330 ms (low).
PACE_OFF1, 2: Disables detection of a pacing pulse when high.
RSYNC: An external output of RSYNC (negative logic output with a width of 100 ms).
WDTINL: Turns off WDT. (Not used at present)
WDTCLK: A clock input to WDT. (Turned on every 500 ms to output a trigger signal).

DIPSW:
1: Application/debugging mode switching (ON: Debugging; OFF: Application)
2: Installation/Normal operation mode switching (ON: Installation; OFF: Normal operation)
3: For Fukuda Denshi/For Datascorp mode switching (ON: Datascorp; OFF: Fukuda Denshi)
4: WDT disable/enable (ON: Disable; OFF: Enable)

PACE_PLS1, 2: Detects pacing pulses when high.
ADD: Provides an interface with DS-5300. (Not used at present.)
TMP_CONT: An internal temperature warning flag. (Goes high when the temperature reaches 73℃.)
AD_MPX0 to 3: A/D switching signals.
0h: I 1h: II 2h: III 3h:V1 4h: V2 5h: V3
6h: V4 7h: V5 8h: V6 9h: RESP Ah: Disconnected electrode
P_SW1, 2: Enables panel switch monitoring. (Enables panel switch monitoring when low.)
P_LED1, 2: Turns on/off a panel LED. (Turns on a panel LED when low; turns it off when high.)

(1) External interruption
IRQ0: End of A/D conversion
IRQ1: SCA send/receive interruption

(2) Serial interface
ch1:
Communication system: Start-stop
Baud rate: 19200 bps
Data bits: 8 bits
Stop bits: 1 bit
Parity: None
Flow control: None

Reset IC (MB3773)
Power-on reset: 1000 ms
Watchdog timer clock: 1000 ms
Watchdog timer reset: 160 ms

HJCPU Circuit Diagram (Page 3)
This circuit uses an MBM29F800BC-70PFTN (1 MB) device for the application area, and an HY5118160CJC-60 (2MB) device for the work area.

HJCPU Circuit Diagram (Page 4)
This circuit uses a pair of TC55100CFT-70L devices (128 bytes each) for the work area for HDLC communication.

HJCPU Circuit Diagram (Page 5)
This circuit uses an ispLSI2064LT100 (PLD) device as the SCA interface control and I/O circuit.
IO
INST1 to 9: Installs ECG when low.
RESPINST: Installs RESP when low.
LD_CNT0-3: Switch between electrodes subject to detection of disconnect.
0h: RA 1h: LA 2h: LF 3h: C1 4h: C2 5h: C3 6h: C4
7h: C5 8h: C6
LEAD_SEL0, 1: Switch between leads according to the number of electrodes.
0h: 3-electrode lead III
1h: 3-electrode lead II
2h: 3-electrode lead I
3h: 10-electrode or 5-electrode lead

HJCPU Circuit Diagram (Page 6)
This circuit uses an HD64570F (SCA) device as a serial communication IC for HDLC communication.

HJCPU Circuit Diagram (Page 7)
This circuit converts the serial data (from the A/D converter) to 16-bit parallel data. Start of A/D conversion is delayed 75 us after issue of the S/W instruction.

HJCPU Circuit Diagram (Page 8)
This circuit detects pacing pulses and changes them to 10-ms pulses.

HJCPU Circuit Diagram (Page 9)
This circuit controls fan operation. Goes high to turn on the fan when the temperature rises to 66℃; goes low to turn off the fan when the temperature falls to 63℃.

HJCPU Circuit Diagram (Page 10)
This diagram shows how unused gates are dealt with.

●HJPWR Theory of Operation

The HJPWR incorporates the power supply and isolation circuits.

HJPWR Circuit Diagram (Page 1)
This circuit isolates the IB-5006 signals from HDLC communication signals.
CN702 is an interface connector for the IB-5006.
CN701 is an interface connector for the HJCPU.

HJPWR Circuit Diagram (Page 2)
This is the primary side switching circuit for the power supply circuit. The dielectric strength for isolation is 4 kV.

HJPWR Circuit Diagram (Page 3)
This is a switching power supply circuit for +5, +8V, and -8V.
The LTC1376 supplies +5 V, the LTC1372 supplies +8 V, and the MAX765 supplies -8 V.

BLOCK DIAGRAM（HC-530）

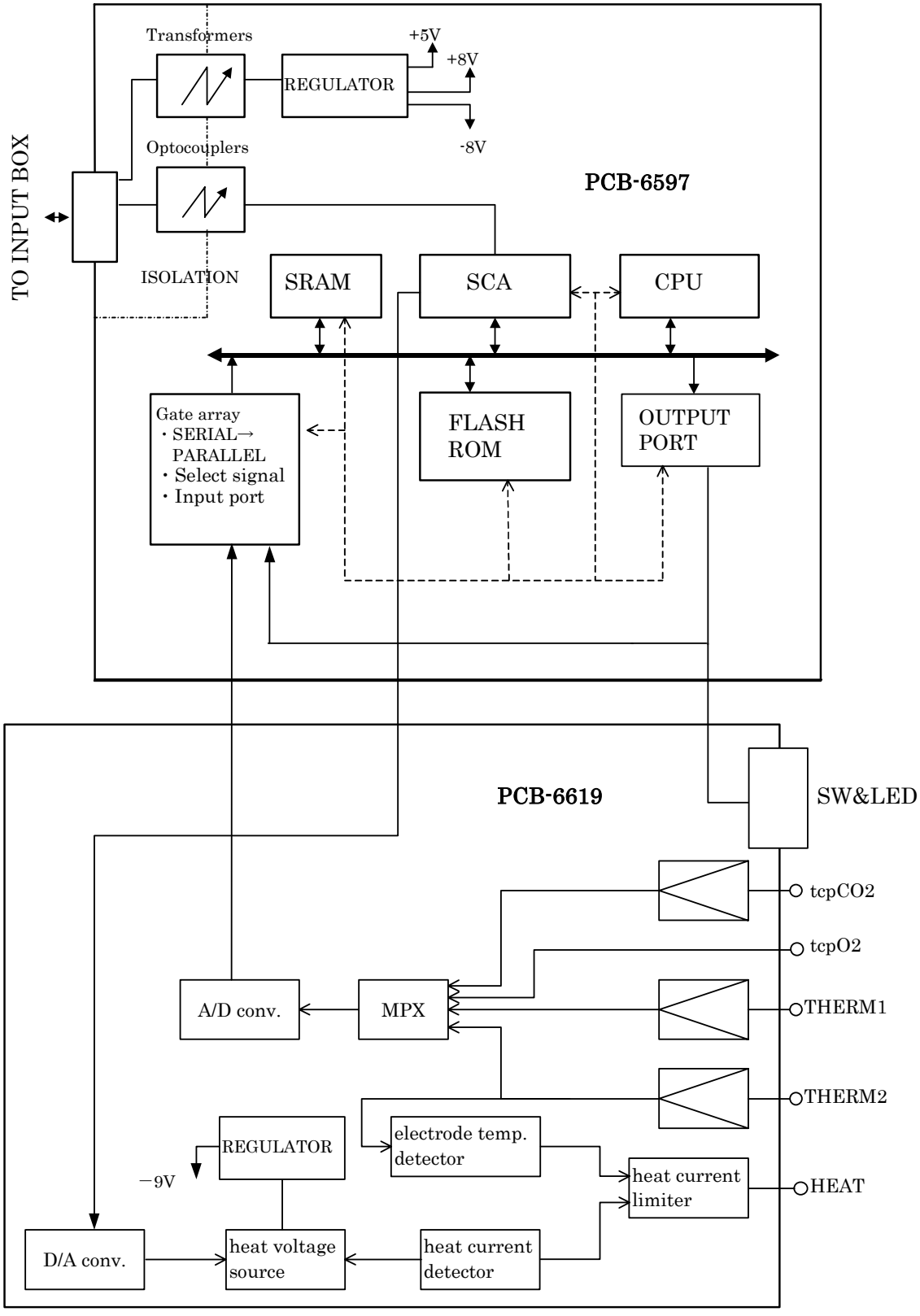

Circuit Description（HC-530）

●HC-530 Theory of Operation

The HC-530 is a transcutaneous oxide/carbon dioxide partial pressure (tcpO2/pCO2) module that operates with the DS-5000 series monitor system. The HC-530 module must be inserted into the IB-5006 for operation. Only one HC-530 module can be installed into a system. The HC-530 module consists of an I/F board (PCB-6597) common to other modules and a dedicated TCP board (PCB-6619).

The HC-530 module incorporates a CPU and its peripheral circuits. Analog signals are converted to digital signals and the converted signals are processed by the CPU. The module performs numeric measurements and calculations of parameters.

The CPU in the HC-530 performs the following processes:
- Measurement and calculation of pO2 and pCO2
- Measurement of the temperature and power consumption of electrodes
- Measurement of the time during which electrodes are put on the patient
- Electrode error detection and processing
- Electrode heating control
- Electrode calibration
- Detection of disconnected probes

The monitor performs the following process:
- Alarm issue/stop

Communication for numeric data is performed using HDLC protocol at a transmission speed of 1 Mbps. The monitoring condition (electrode temperature, electrode attachment time, calibration, etc.) is received from the monitor to the HC-530 using the same HDLC protocol and speed.

The module contains FLASH memory and can be upgraded through the monitor from data stored on an IC card.

This isolation is contained on the HC-530 I/F Board.

The HC-530 has one key on the front panel. This is for tcpO2/CO2 calibration.

●PCB-6619（TCP BOARD）

The TCP board is dedicated to the HC-530 module. The board contains an input amplifier, a multiplexer and A/D converter circuit, an overheat detector, a heater current limiter, a heater voltage controller, and a heating controller.

Input Amplifier

The input amplifier amplifies the input signals from the input connector and sends the amplified signals to the multiplexer.

Multiplexer and A/D Converter

The multiplexer and A/D converter circuit receives the amplified signals from the input amplifier and multiplexes them using the 8-channel multiplexer (IC20).

Signals input to the multiplexer are summarized as follows:

Channel number	Signal name	Description	Input level	Input range
0	pCO2	pCO2 input	$-14.7V_{pCO2}-0.669$	5～200mmHg
1	pO2	pO2 input	V_{pO2}	0～800mmHg
2	-680mV	Monitoring of pO2 electrode polarization voltage	-680mV	
3	Therm2	Electrode temperature (for safety circuit)	-0.1(T－10)	5～57℃
4	GND	Ground (for A/D adjustment)	0V	
5	therm1	Electrode temperature (for heater control)	-0.5(T－37)	36.5～47.0℃
6	Vheat	Heater voltage	$-0.3(V_{LOAD}+20I_{LOAD})$	-11.8～-14.7V
7	Iheat	Heater current	$-20I_{LOAD}$	0～53mA

This circuit then converts the multiplexed signal to digital signals using the 16-bit A/D converter (IC16). The sampling time is 1 kHz. The converted signals are sent as serial data to the I/F board through CN2.

Overheat Detector

The overheat detector compares the therm2 signal using the comparator (IC14A). When the temperature exceeds 45.6 ^{0}C, this circuit outputs an overheat signal to shut down the power supply to the electrodes.
This circuit also sends the overheat signal to the I/F board via CN3, so the signal is applied to INPORT2 and used for error processing.

Heater Current Limiter

The heater current limiter controls the transistor (Q4) to limit the maximum current flowing to the electrode heaters to 53 mA.

Heater Voltage Controller

The heater voltage controller contains the DC/DC converter (IC9) that converts the +5 V input voltage to a voltage within a range between -15 V and -10 V. When the electrodes are not heated, this circuit regulates the heater voltage to -10 V. When the electrodes are heated, this circuit controls the heater voltage within a range between -15 V and -12 V according to the electrode temperature. To control the heater voltage, the CPU calculates the data value to be set in the D/A converter (IC18) from the measured electrode temperatures and sets the calculated value in the D/A converter.
The shunt regulator (IC19) reduces the heater voltage to -9 V for use as a power supply for the analog circuits.

Heating Controller

The heating controller uses the signal (/HEAT_EN) sent from the OUT PORT1 pin of the I/F board.
When the /HEAT_EN signal goes low, the FPGA (IC6) and its peripheral circuit turn on the power switch (Q6) for the electrodes, so the electrodes are powered and heated.
This circuit incorporates a heating watchdog timer. The timer IC (IC5) sends 208-ms signals to the counter consisting of FPGA, and the counter counts the signals. This counter is reset when the /HEAT_EN signal goes high. During heating of the electrodes, the /HEAT_EN signal goes high at certain intervals to reset the counter. Should the /HEAT_EN signal stay low for 26.6 seconds or longer due to any problem, the /HEAT_ERR signal goes low. This signal is sent to the I/F board through CN3 and is applied to the INPORT3 pin to trigger error processing. At the same time, this circuit turns off the power switch for the electrodes in order to shut down the power supply to the electrodes and stop heating of the electrodes.

●PCB-6597 （I/F BOARD）

The I/F Board has an A/D converter and creates measurement values for the monitor.
Waveform measurement data are sent to the monitor through HDLC protocol at 1 Mbps.

For control of all of the functions, the following devices are required:
CPU HD6417032F20
Clock: 8 MHz
Peripheral Devices: SCA
EPROM (256 kB)
FLASH Memory (512 kB)
SRAM (256 kB, 2 hours back up)
Gate Array

1.CPU

The CPU buss uses a 22 bit address signal, and a 16 bit data signal.
A two channel serial communication interface is used. Channel 1 is used for the LED display. Channel 2 is not used.
I/O ports PB3 to PB7 are used for OUTPORT1 to OUTPORT5 signals. The signal assignment is shown in the following table:

I/O port	Outport	value	description
PB3	OUTPORT1	0	Enable power supply to heater
		1	Disable power supply to heater
PB4	OUTPORT2	0	Enable DAC access
		1	Disable DAC access
PB5	OUTPORT3		N/A
PB6	OUTPORT4		N/A
PB7	OUTPORT5		N/A

I/O ports PC4～PC7 are for DIP SW functions. The DIP SW is used for FLASH memory boot software programming. If the four switches are turned on, the system performs mandatory installation of boot application software.

2.SCA

The SCA is a Serial Communication Controller IC with a two-channel serial communication port. Channel 1 is used for communication between the module and the monitor. This is HDLC communication at 1 Mbps. Channel 2 is not used.

3.EPROM

Erasable Programmable Read Only Memory (EPROM) is used for installation of the FLASH memory boot program. Normally this EPROM IC is not installed in the HC-530. It is only used when necessary by manufacturing.

4.Flash Memory

The flash memory is where the application program for the HC-530 resides. The program area is divided into a boot program area and application program area. The boot program area is write protected through hardware.

5.WDT (Watch Dog Timer): Reset IC

The I/F Board contains a reset IC that includes watch dog timer function. This monitors power voltage, and various software operations. If 1.6 seconds pass without proper communication to the WDT, this IC outputs a reset signal. The CPU power voltage cannot drop below 4.65 VDC or the WDT will reset.

6.SRAM

The I/F Board has 256K of SRAM. This memory in the SRAM is backed up for 2 hours. The SRAM memory contains the measurement conditions. The power for back up of the memory is stored by capacitor. thermistor

7.Gate Array.

The gate array contains the following functions:

- Output chip select signal for peripheral devices
- Create the clock for peripheral devices.
- A/D converter control
- A/D data serial to parallel control
- 8 channel Input port as outlined in the table below.

bit	Input	value	description
7	INPORT4	0	Combined electrode
		1	pO2 electrode
6	INPORT3	0	Heating operation error
		1	Normal operation
5	INPORT2	0	Heating error
		1	Normal operation
4	INPORT1	0	Heating in progress
		1	Heating stopped
3	KEY2	0	CAL SW ON
		1	CAL SW OFF
2	KEY1		N/A
1	PROBE2*	0	Electrode is installed in electrode chamber.
		1	Electrode is not installed in electrode chamber.
0	PROBE1*	0	Electrode probe is disconnected.
		1	Electrode probe is held connected.

●Electrode Error Processing（HC-530）

The HC-530 module has a variety of electrode checking functions.
If any error other than the TEMP error occurs, this module stops heating of the electrodes, clears the measurement values on the monitor, and displays an error message on the monitor. This module also issues an alarm sound when any one of the following errors occur: TEMP ERROR HARD, POWER ERROR, SITE TIME OVER, HEAT ERROR, TEMP DIFF ERROR, TEMP RANGE ERROR, and MEMBRANE ERROR.

The following table summarizes the errors with probable causes:

ERROR	FACTOR
TEMP	・This error occurs when the difference between the set electrode temperature and the measured electrode temperature exceeds ±0.3℃. ・This error may occur in the measurement wait state or measurement state. ・This is the only error that does not stop heating of the electrodes.
TEMP ERROR HARD	・This error occurs when the overheat limiter (hardware) detects overheating and the INPORT2 signal goes low. ・This error may occur in a state other than the standby state or error state. This error is not caused by the TEMP error.
POWER ERROR	・This error occurs when the electrode consumption power exceeds 600 mW for 2 minutes or longer. ・This error may occur in the calibration state, measurement wait state, or measurement state.
SITE TIME OVER	・This error occurs when the electrode application time counter reaches 0 minute of 0 hour. ・This error may occur in the measurement state.
HEAT ERROR	・This error occurs when the overheat watchdog timer (hardware) detects an error and the INPORT3 signal goes low or when the hardware is in the heating state whereas the software is not in the heating state.
WARM UP ERROR	・his error occurs when the measured electrode temperature does not reach the set electrode temperature 3 minutes after heating started during calibration. ・This error may occur in the calibration state.

ERROR	FACTOR
SIGNAL RANGE ERROR	▪ This error occurs when neither the pO2 or pCO2 signal comes into the specified signal range within 1 minute after completion of heating check during calibration. ▪ This error does not occur if either the pO2 or pCO2 signal comes into the specified signal range. In this case, the measurement value of the parameter outside the specified signal range is not displayed. ▪ This error may occur in the calibration state.
STABILITY ERROR	▪ This error occurs when neither the pO2 or pCO2 signal satisfies the condition that "the difference between the signal value measured 1 minute before and that measured 30 seconds before is within 1%" within 15 minutes after completion of electrode signal range checking during calibration. ▪ This error does not occur if either the pO2 or pCO2 signal comes into the specified range. In this case, the measurement value of the parameter outside the specified signal range is not displayed. ▪ This error may occur in the calibration state.
TEMP DIFF ERROR	▪ This error occurs when the measured temperature of either thermistor 1 or 2 exceeds 36.0℃and the difference between the measured temperatures of thermistor 1 and thermistor 2 exceeds 0.6℃. ▪ This error may occur in the measurement wait state or measurement state, after the completion of heating check performed in the measurement state.
TEMP RANGE ERROR	▪ This error occurs when the measured temperature of an electrode is 5.0℃ or lower or 46.0℃ or higher. ▪ This error may occur in a state other than the standby state where no error exists. This error is not caused by the TEMP error.
MEMBRANE ERROR	▪ This error occurs when the pCO2 signal does not change ±2 mV for more 10 seconds after the measurement state started.

Blank Page

Chapter 9

Parts Lists

HJ-500 9-1

HC-530 9-9

Chapter 9 Parts Lists

HJ-500

●HJAMP

Location		Description		Q'ty
C	19	GRM40CH330J50	33pF	1
C	20	GRM40CH331J50	330pF	1
C	53,54,55,56,57,58,59,61,62, 63,64,76,77,78,79,80,81,82, 84,85,86,87,94,95,96,97, 113	GRM40CH471J50	470pF	27
C	21	GRM40CH561J50	560pF	1
C	99	GRM40B222K50	2200pF	1
C	24,25,28,29,39,40,43,105, 118	GRM40B332K50	3300pF	9
C	65,68,71,90,93,101,115, 130,133	GRM40B103K50	0.01uF	9
C	3,4,26,27,30,31,44,45,46, 49,50,51,52,66,67,72,91,92, 102,104,106,107,108,109, 110,111,112,119,120,121, 122,125,126,127,131,132	GRM40B223K50	0.022uF	36
C	1,10,34,35,36,37,38,41,42, 47,48,60,69,70,73,74,75, 83,88,89,98,103,114,116, 117,123,124,128,129	GRM40F104Z25	0.1uF	29
C	100	GRM42-6B105K16	1uF	1
C	5,6,7,13,14,15,18	ECKD2H102KB5	1000pF	7
C	2,8,9,16,17,22,23,32,33	ECQV1H105JL	1uF	9
C	11,12	10SL22M	22uF	2
CN	1	FX2CA-40S-1.27DSAL		1
D	1,2,3,7,9,10,14,18,19	1SS226		9
D	6,8,11,12,13,15,16,17,20, 21,22,23,24	MA198		13
D	4,5	02CZ4.7Y		2
IC	4,8,20,22,29,30	uPC4064G2		6
IC	3,19,21	LF444CM		3
IC	5,6,7,11,12,13,16,17,24,25	OP490GS		10
IC	9	TC4051BF		1
IC	23,34	TC4052BF		2
IC	10,15,27	TC4053BF		3
IC	31	TC4W53F		1
IC	1,2,14,18,26,28,32,33,35	DG211BDY		9
R	1	MCR03EZHJ000	0Ω	1
R	79,91,99,110,122,162,167, 197,209	MCR03EZHJ302	3kΩ	9
R	19,20,21,29,30,31,37,38,45	MCR03EZHJ123	12kΩ	9
R	75,76,77,78,100,101,102, 103,126,127,130	MCR03EZHJ223	22kΩ	11
R	161	MCR03EZHJ473	47kΩ	1
R	3	MCR03EZHJ823	82kΩ	1
R	2,71,72,73,74,123,124,125, 210,211,212,213	MCR03EZHJ104	100kΩ	12
R	58,59,61,144,145,146,174, 175,177	MCR03EZHJ364	360kΩ	9
R	128,129	MCR03EZHJ105	1MΩ	2

Location		Description		Q'ty
R	56,57,60,142,143,147,172, 173,176	MCR03EZHJ365	3.6MΩ	9
R	6,7,62,138,139,148,168, 169,178	MCR03EZHF1001	1kΩ	9
R	46,47,48,49,157,158,159, 160,187,188,189,190	MCR03EZHF2202	22kΩ	12
R	65,66,67,68,69,70,150,151, 152,153,154,155,180,181, 182,183,184,185	MCR03EZHF2402	24kΩ	18
R	54,55,63,140,141,149,170, 171,179	MCR03EZHF3902	39kΩ	9
R	8,9,39,40,50,51,64,156,186	MCR03EZHF1203	120kΩ	9
R	87,94,106,107,118,134,193, 194,205	MCR10EZHF4992	49.9kΩ	9
R	5,16,17,18,27,28,35,36,44	HC2A100MΩJ	100MΩ	9
R	80,81,82,83,84,85,86,88,89, 90,92,93,95,96,97,98,104, 105,108,109,111,112,113, 114,115,116,117,119,120, 121,131,132,133,135,136, 137,163,164,165,166,191, 192,195,196,198,199,200, 201,202,203,204,206,207, 208	RN73C2ATD100KB		54
R	4,11,13,15,23,25,32,34,41	RD50U912J	9.1kΩ	9
R	42,43,52,53	RD50U103J	10kΩ	4
R	10,12,14,22,24,26,33	RD50U223J	22kΩ	7
TP	1	LC-3-S(Black)		1

●HJRESP

Location		Description		Q'ty
C	361,362	GRM40CH100D50	10pF	2
C	305,357,358,359,360	GRM40CH220J50	22pF	5
C	376,377	GRM40CH330J50	33pF	2
C	314,329,330	GRM40CH101J50	100pF	3
C	337,380,381	GRM40CH121J50	120pF	3
C	327,328,372,373	GRM40CH151J50	150pF	4
C	382,383,384,385	GRM40CH181J50	180pF	4
C	349	GRM40CH471J50	470pF	1
C	346,350	GRM40CH102J50	1000pF	2
C	321,325,326	GRM40B472K50	4700pF	3
C	343,375	GRM40B103K50	0.01uF	2
C	319	GRM40B123K50	0.012uF	1
C	370	GRM40B153K50	0.015uF	1
C	317,369	GRM40B223K50	0.022uF	2
C	367	GRM40B473K50	0.047uF	1
C	303,304,320,323,324,336, 338,339,344,347,348,351, 352,353,355,356,371,374, 386,387,388,389,390,391, 393,394,395,397,398,399, 400,401	GRM40F104Z25	0.1uF	32
C	342,364,378,379	GRM42-6B104K50	0.1uF	4
C	335	GRM42-6B154K50	0.15uF	1
C	365	GRM42-6B334K50	0.33uF	1
C	363	GRM42-6B105K16	1uF	1

Location		Description		Q'ty
C	340,341,345,354,392	GRM42-6F105Z25	1uF	5
C	315,316,322,331	EEVHA1C100R	10uF	4
C	301,306,307,313,333,334	EEVHA1C220R	22uF	6
C	302	ECA1CHG101	100uF	1
C	308,309	ECKD2H221KB5	220pF	2
C	310,311	ECKD2H102KB5	1000pF	2
C	312,318	ECQV1H105JL	1uF	2
C	332	DE0910SL470J6K	47pF	1
C	366,368	MCR10EZHJ000	0Ω	2
CN	305	DF3A-2P-2DSA(01)		1
CN	301	DF11-4DP-2DSA(01)		1
CN	304	FX2CA1-40P-1.27DSAL		1
CN	302	FX2CA-52S-1.27DSAL		1
D	302,311,312,318,319	1SS226		5
D	303,304,309,310,315,316	1SS294		6
D	301	D1FL20U		1
D	305,306,307,308,313,314, 317	MA198		7
IC	313	HCPL-7840		1
IC	321	TLP621		1
IC	301	HEF4047BT-T		1
IC	325	LTC1418CG		1
IC	330	TA78DS05AF		1
IC	329,332	TA78L05S		2
IC	307	TA79L005P		1
IC	310	LF444CM		1
IC	304,312,315	TL064CPW		3
IC	317,318	uPC393G2		2
IC	302,305,308,328	uPC812G2		4
IC	314,316,322	uPC4062G2		3
IC	306	TC4013BF		1
IC	323,324	TC4051BFT		2
IC	303	TC4052BFT		1
IC	309	TC4053BFT		1
IC	311	TC4W53F		1
IC	319,320,331	TC7S04F		3
IC	327	SN74LS07NS		1
JP	301	DSP03-003-432G		1
L	301	EL0606SKI-680K		1
L	302,303,304,305	LQH3C220K04T1		4
R	313,314,401	MCR03EZHJ000	0Ω	3
R	312,337,338,381,411,414, 422,427	MCR03EZHJ101	100Ω	8
R	340	MCR03EZHJ221	220Ω	1
R	351,370,373,430	MCR03EZHJ102	1kΩ	4
R	342	MCR03EZHJ122	1.2kΩ	1
R	426	MCR03EZHJ152	1.5kΩ	1
R	301,353,412,413,415,416, 417	MCR03EZHJ222	2.2kΩ	7
R	343,356	MCR03EZHJ472	4.7kΩ	2
R	316,423	MCR03EZHJ512	5.1kΩ	2
R	425	MCR03EZHJ752	7.5kΩ	1
R	317,357,360,361,388,390	MCR03EZHJ103	10kΩ	6
R	348	MCR03EZHJ123	12kΩ	1

Location		Description		Q'ty
R	355	MCR03EZHJ203	20kΩ	1
R	344,396,402	MCR03EZHJ223	22kΩ	3
R	347	MCR03EZHJ363	36kΩ	1
R	341,372	MCR03EZHJ393	39kΩ	2
R	375	MCR03EZHJ473	47kΩ	1
R	364,365	MCR03EZHJ513	51kΩ	2
R	315	MCR03EZHJ623	62kΩ	1
R	318	MCR03EZHJ753	75kΩ	1
R	311,326,327,339,349,350, 352,359,429	MCR03EZHJ104	100kΩ	9
R	428	MCR03EZHJ154	150kΩ	1
R	383,384,405,406	MCR03EZHJ274	270kΩ	4
R	371,403,404	MCR03EZHJ474	470kΩ	3
R	376,377,378,379,380,382, 385	MCR03EZHJ514	510kΩ	7
R	362,363,374,418,419,420 421	MCR03EZHJ105	1MΩ	7
R	358,369	MCR03EZHJ335	3.3MΩ	2
R	368	MCR03EZHF3001	3kΩ	1
R	331,332,408	MCR03EZHF8201	8.2kΩ	3
R	319,320,321,322,323,325, 328,330,345,346,410	MCR03EZHF1002	10kΩ	11
R	324,329	MCR03EZHF1202	12kΩ	2
R	333,334,335,336,354,366, 367	MCR03EZHF2002	20kΩ	7
R	394,395,398,399	MCR03EZHF2202	22kΩ	4
R	302	MCR03EZHF3002	30kΩ	1
R	307,308,309,310,407	MCR03EZHF1003	100kΩ	5
R	387,389	MCR03EZHF2203	220kΩ	2
R	392,393,397,400	MCR03EZHF5103	510kΩ	4
R	409	MCR10EZHF3602	36kΩ	1
R	386,391	MCR10EZHF1503	150kΩ	2
R	303,304	RD50U512J	5.1kΩ	2
R	305,306	RD50U223J	22kΩ	2
T	301	FT-2155		1
TP	301,302	RCUOC		2
TP	303	LC-3-S(Black)		1
TR	301	RT1N141M-T11		1
TR	302	2SC4541		1
TR	303	2SC2589-Y		1
TR	304	2SA1182-Y		1
VR	306	RVG3A08-102VM		1
VR	301	RVG3A08-502VM		1
VR	303	RVG3A08-103VM		1
VR	302	RVG3A08-203VM		1
VR	304,305	RVG3A08-503VM		2
XJP	301	DSP01-002-430G-9		1

●HJCPU

Location		Description		Q'ty
C	515,516	GRM40CH220J50	22pF	2
C	521	GRM40CH470J50	47pF	1
C	544	GRM40CH101J50	100pF	1
C	520	GRM40CH471J50	470pF	1
C	508,510	GRM40CH102J50	1000pF	2
C	552	GRM40B103K50	0.01uF	1
C	509,513,514,517,518,519, 522,523,524,525,526,527, 528,529,530,531,532,533, 534,535,536,537,538,539, 540,541,542,543,545,546, 547,548,550,551,553	GRM40F104Z25	0.1uF	35
C	511,512,549,554	GRM42-6B104K50	0.1uF	4
C	505	GRM42-6F105Z25	1uF	1
C	506	EEVHA1E100R	10uF	1
C	501,502	EEVHA1C220R	22uF	2
C	503,504,507	10SL22M	22uF	3
CN	502	FH10A-7S-1SH		1
CN	503	DF3A-2P-2DSA		1
CN	505	DF11-8DP-2DSA		1
CN	506	DF11-10DP-2DSA		1
CN	507	FX2CA-20S-1.27DSAL		1
CN	504	FX2CA1-50P-1.27DSAL		1
D	501	1SS226		1
D	502	D1FS6		1
FL	501,502,503,504,505	VFM41R01C222N16-27B1		5
IC	502	HD64570F16		1
IC	501	HD64F7045F28		1
IC	504	HY5118160CJC-60		1
IC	515	IspLSI2064-80LT		1
IC	508	MBM29F800BA-70PFTN		1
IC	513,516	TC551001CFT-70L		2
IC	522	MB3773PF		1
IC	523,524	UPC358G2		2
IC	506,507,512,525	SN74LS07NS		4
IC	505,514	TC74HC04AF		2
IC	519	TC74HC32AF		1
IC	526	TC74HC74AF		1
IC	518,520,527	TC74HC123AF		3
IC	521,528	TC74HC7094AF		2
IC	509	TC7S04F		1
IC	503,510	TC7S08F		2
IC	517	TC7S32F		1
JP	501	DSP03-003-432G		1
JP	502	DSP03-003-431G		1
L	501	LQH3C220K04T1		1
LED	501,502,503,504	PY1101W-TR		4
R	503,518,519,526,558,596	MCR03EZHJ101	100Ω	6
R	523,529	MCR03EZHJ221	220Ω	2
R	501,502,504,578	MCR03EZHJ102	1kΩ	4
R	515,559,564,590,591,605 606,612	MCR03EZHJ222	2.2kΩ	8

Location		Description		Q'ty
R	525	MCR03EZHJ332	3.3kΩ	1
R	616	MCR03EZHJ472	4.7kΩ	1
R	506,508,535,550,551,552, 553,554,555,556,576,577 579,581,593,594,615	MCR03EZHJ103	10kΩ	17
R	617	MCR03EZHJ753	75kΩ	1
R	509,516,517,521,522,530, 531,534,536,537,549,557, 565,566,567,568,569,570, 571,582,583,595,597,598, 599,604,607,608,609,610, 611,613,614,618,619,620, 621	MCR03EZHJ104	100kΩ	37
R	520,524,527,528,532,533, 539,540,541,542,543,544, 545,546,547,548,560,572, 573,574,575,592	MCR03EZHJ105	1MΩ	22
R	584,588	MCR10EZHF1201	1.2kΩ	2
R	585,586	MCR10EZHF2001	2kΩ	2
R	587	MCR10EZHF1002	10kΩ	1
R	589	MCR10EZHF1202	12kΩ	1
R	562	MCR03EZHF2002	20kΩ	1
R	563	MCR03EZHF2402	24kΩ	1
R	505,561	MCR03EZHF3002	30kΩ	2
RT	501	D5-3540		1
S	501	KHS04C		1
TP	501	LC-3-S(Black)		1
TR	501,502	RT1N41MT11		2
TR	503	2SC2712-Y		1
TR	504	2SC4541		1
X	501	HC-49/U-S 8MHz		1
XJP	501,502	DSP01-002-430G-9		2
XX	501	JXO(stand)		1

●HJPWR

Location		Description		Q'ty
C	720	GRM40CH102J50	1000pF	1
C	724	GRM40B332K50	3300pF	1
C	722	GRM40B472K50	4700pF	1
C	718,719,727,728,738,739, 744,745	GRM40B103K50	0.01uF	8
C	721	GRM40B473K50	0.047uF	1
C	705,707,709,714,715,716, 717,723,726,729,732,734, 736,737,740,741	GRM40F104Z25	0.1uF	16
C	730	GRM42-6F105Z25	1uF	1
C	706,708,710	EEVHA1E100R	10uF	3
C	701,702,703,704,711,712, 713,735	EEVHA1C220R	22uF	8
C	731,746,747	ECA1HHG220	22uF	3
C	725,733,742	ECA1CHG101	100uF	3
C	743	DE0910B101K6K	100uF	1

Location		Description		Q'ty
CN	701	FX2CA1−20P−1.27DSL		1
CN	702	FX2−20P−1.27DSL		1
D	701,702,703,704,705,709, 713	1SS226		7
D	707	1SS294		1
D	718	RD33F		1
D	714	RD4.7E-B		1
D	706	RD6.2E-B		1
D	708,710,711,712,715,716, 717	SFPB-74		7
F	701	EYP05BE102		1
F	702	230.5		1
IC	703,704,706	HCNW2611-300		3
IC	710	LT1372CS8		1
IC	709	LT1376CS8		1
IC	711	MAX765CSA		1
IC	701,702	TC7S04F		2
IC	707	TC7W125FU		1
IC	705	TLP621		1
IC	712	UPC4062G2		1
IC	708	UPC494G		1
JP	1	JP-3		1
L	703,705	CDRH104-220		2
L	704	CDRH73-470MC		1
L	701,702	EL0606SKI-680K		2
L	706	SN3-200		1
R	704,723,726,734,735,753, 760,761,764	MCR03EZHJ000	0Ω	9
R	705,707,709	MCR03EZHJ220	22Ω	3
R	713,716,718	MCR03EZHJ510	51Ω	3
R	701,702,706,708,710,715, 756	MCR03EZHJ471	470Ω	7
R	711,712,747	MCR03EZHJ102	1kΩ	3
R	728	MCR03EZHJ202	2kΩ	1
R	721,722,724,725,750,752, 754,755	MCR03EZHJ472	4.7kΩ	8
R	744,746	MCR03EZHJ752	7.5kΩ	2
R	703,727	MCR03EZHJ103	10kΩ	2
R	714,717	MCR03EZHJ223	22kΩ	2
R	745	MCR03EZHJ393	39kΩ	1
R	719,720,736,737,748,749, 762,763	MCR03EZHJ513	51kΩ	8
R	743	MCR10EZHJ683	68kΩ	1
R	731,732	MCR03EZHF2001	2kΩ	2
R	730	MCR03EZHF5101	5.1kΩ	1
R	733	MCR10EZHF3741	3.74kΩ	1
R	729	MCR10EZHF2742	27.4kΩ	1
R	758	MCR10EZHF1003	100kΩ	1
R	757	MCR10EZHF1303	130kΩ	1
R	759	MCR10EZHF4023	402kΩ	1

Location		Description		Q'ty
T	701,702	FT-30		2
TP	701	LC-3-S(Black)		1
TP	702,703,704	LC-3-S(White)		3
TR	702,703,707,708,712,713, 717,718	2SA1182-Y		8
TR	704,705,709,710,714,715, 719,720	2SC2859-Y		8
TR	706,716	SI9945AEY		2
TR	701,711	SI9948AEY		2

●9E3555 Assembled components HJ-530 674-15014

Parts No.	Location		Description		Q'ty
1G9414			Switch panel HJ-500	684-3413	1

●9D2842 Wiring component HJ-500 674-15016

Parts No.	Location		Description		Q'ty
1M0899			Fan cable	434-5528	1
1M0900			Output cable	324-4208	1

HC-530

●9G6295 6597SAS SMD 674-13604

Parts No.	Location		Description		Q'ty
1H6597A			PCB-6597A	324-4137	1
1A4978	R	59	RK73H1JF	10Ω	1
1A4902	R	6,8,10,20,56	RK73H1JF	22Ω	5
1A4890	R	12,43,103,104,105,121, 122,123,124,125	RK73H1JF	51Ω	10
1A4903	R	31,35,36,37,40	RK73H1JF	100Ω	5
1A4836	R	11,45,53,54	RK73H1JF	750Ω	4
1A4904	R	1,5,7,9,52,55	RK73H1JF	1kΩ	6
1A4937	R	19	RK73H1JF	2kΩ	1
1A5015	R	48,50	RK73H1JF	3.6kΩ	2
1A4940	R	44,205	RK73H1JF	5.1kΩ	2
1A4906	R	4	RK73H1JF	6.8kΩ	1
1A4907	R	21	RK73H1JF	10kΩ	1
1A4957	R	22,49,51,120	RK73H1JF	22kΩ	4
1A4909	R	16,41,42,58,62,131,132, 206	RK73H1JF	22kΩ	8
1A4958	R	3	RK73H1JF	36kΩ	1
1A4912	R	28,29,30,32,33,34,38,39	RK73H1JF	51kΩ	8
1A4916	R	2	RK73H1JF	68kΩ	1
1A4914	R	13,14,25,60,61	RK73H1JF	100kΩ	5
1A4921	R	23	RK73H1JF	130kΩ	1
1A4922	R	26	RK73H1JF	150kΩ	1
1A4932	R	57	RK73H1JF	560kΩ	1
1A4970	R	15,17,106,126,128,129, 130,134	RK73Z1J	0Ω	8
1A4970	JP	1	RK73Z1J	0Ω	1
1A4909	JP	2	RK73H1JF	22kΩ	1
1B5267	C	2	ECHU 1H 102J	0.001uF	1
1B5810	C	47	ECHU 1H 332J	0.0033uF	1
1B5261	C	102	ECWU 1C 224J	0.22uF	1
1B0107	C	3	UUV 1H 010MFR	1uF/50V	1
1B0206	C	10,12,20	UUV 1C 100MFR	10uF/16V	3
1B0161	C	5	UUV 1H 3R3MFR	3.3uF/50V	1
1B0604	C	15,17	UUV 1V 220MFR	22uF/35V	2
1B7425	C	9,11,19	GRM42-6F105Z25	1uF	3
1B5518A	C	101,105,110,113	GRM39CH560J50	56pF	4
1B5524A	C	104	GRM39CH101J50	100pF	1
1B5543	C	33	GRM39B102J50	0.001uF	1
1B5461	C	41,42,43,44,45,92	GRM39B103K50	0.01uF	6
1B5568	C	21,23,25,26,27,29,31,32, 35,37,48,52,54,55,56,58, 59,60,61,62,63,64,65,66, 69,90,103,114,115,116, 117,118,119,120,121,122,1 23,124,125,126,127	GRM39F104Z25	0.1uF	41
1B5014	C	8	MCH325F474Z	0.47uF	1
1B5528	C	107,111,112	GRM39CH151J50	150pF	3
1D0980	Q	3	2SC2412K-BR		1
1D3883	D	3,4,5,6,7,30	MA160		6
1D3878	D	1,11,12,14,15,16,17	MA726		7

Parts No.	Location		Description		Q'ty
1D3204	D	8,9,10,26,28	SFPB-74		5
1D4292	D	2	RD-6.2FMB		1
1D4504	D	27,29	RD-11FMB		2
1D2363	Q	5,6	2SK2201(SM)		2
1D2416	Q	1	Si9945DY		1
1D2418	Q	2	Si9948DY		1
1D7638	IC	33	K50-CS1-SE 16MHz		1
1D4994	Z	1,2	ERZSF2MK 330		2
1D1755	Q	4	2SJ166-L		1
1E1910	IC	31	HD6417032F20		1
1E2956	IC	9	HD64570F16		1
1E5097	IC	25	E28F400B5-B60		1
1E4747A	IC	26,27	HM628128ALT-5SL		2
1E1497	IC	35	FDM04108		1
1E7036	IC	19,20	LM2594M-ADJ		2
1E7032	IC	23	LT1376CS8-5		1
1E9225	IC	10	MAX705CSA		1
1E0619	IC	34	μPD5555G		1
1E3131	IC	21,22	HD74BC245AT		2
1E3179	IC	38	TC74VHC00FS		1
1E3161	IC	28	TC74VHC04FS		1
1E3167	IC	37	TC74VHC08FS		1
1E3180	IC	1	TC74VHC125FS		1
1E3178	IC	7	TC74VHC541FS		1
1E5635	IC	6	TC74AC174FS		1
1E0715	IC	15	μPC494GS		1
1E6235	IC	24	NJM78L05UA		1
1E8972A	IC	2,3,4,17	HCNW2611 #300		4
1E8973	IC	16	PS2562L-1		1
1E9121	IC	8	IC160-0324-200		1
1E6802	IC	36,39,40	TC7SH04FU		3
1E5540	IC	30	TC7W00FU		1
1E5552	IC	18	TC7W04FU		1
1E5554	IC	29	TC7W14FU		1
1F2903	CN	2	FX2-20S-1.27SV		1
1F2818	CN	5	DF13-10P-1.25H		1
1G2850	SW	1	CHS-04B		1
1K1815	TP	1,4,5	HK-5-5(ORANGE)		3
1K1816	TP	2,3	HK-5-S(BLACK)		2
1T6374	L	7,8	CDPH73-221		2
1T6373	L	6	CDRH104-220		1
1T6337	L	2,3,4,5	BLM31A601S		4
1L4556	NF	1,2	VFM41R01C222N16-27		2
1L4607	F	1	460001		1
1R5602	RM	14,21	EXB V8V 510J	51Ω	2
1R5606	RM	1,2,3,4,7,8,9,13,17,18,19	EXB V8V 223J	22kΩ	11
1R5604	RM	12	EXB V8V 104J	100kΩ	1

●9G6296 6597SAS THD 674-13605

Parts No.	Location		Description		Q'ty
1B9079	C	28	EEC-S5R5H224	0.22uF	1
1K0059	JP	4	PM-1(2P)		1
1F1910	CN	3	FX2CA1-32P-1.27DSAL		1
1F1448	CN	4	FX2-20P-1.27DSL		1
1T6130A	T	1	FT-30		1
1T6016A	T	2	FT-2155		1

Parts No.	Location		Description		Q'ty
1T6285	L	1	SN-3-200		1
1B0580	C	7	UPV1V560MGH	56uF/35V	1
1B8424	C	13,16,18	16SL15M	15uF/16V	3
1B8430	C	14,128	10SL22M	22uF/10V	2

●9G6462 6619 SMD HC-530 674-14809

Parts No.	Location		Description		Q'ty
1A4903	R	60,74,75	RK73H1J TD 100 F	100Ω	3
1A4888	R	38,40	RK73H1J TD 200 F	200Ω	2
1A4891	R	1,9,94	RK73H1J TD 510 F	510Ω	3
1A4969	R	67,105	RK73H1J TD 1.5k F	1.5kΩ	2
1A5073	R	42	RK73H1J TD 2.74k F	2.74kΩ	1
1A4896	R	57	RK73H1J TD 3.0k F	3.0kΩ	1
1A4944	R	95	RK73H1J TD 4.7k F	4.7kΩ	1
1A4945	R	13,66	RK73H1J TD 5.6k F	5.6kΩ	2
1A5075	R	31	RK73H1J TD 7.68k F	7.68kΩ	1
1A5025	R	41	RK73H1J TD 11k F	11kΩ	1
1A4956	R	49	RK73H1J TD 18k F	18kΩ	1
1A4957	R	102	RK73H1J TD 20k F	20kΩ	1
1A4909	R	12,59,62	RK73H1J TD 22k F	22kΩ	3
1A5000	R	44	RK73H1J TD 27k F	27kΩ	1
1A4910	R	39	RK73H1J TD 33k F	33kΩ	1
1A4912	R	20,88	RK73H1J TD 51k F	51kΩ	2
1A4982	R	19	RK73H1J TD 105k F	105kΩ	1
1A4983	R	103	RK73H1J TD 232k F	232kΩ	1
1A4936	R	30	RK73H1J TD 1M F	1MΩ	1
1A9427	R	3,4,5,6,7,8,17,35,37,58,61,80,83	RN73C2A TD 1.0k B	1.0kΩ	13
1A6045	R	34	RN73F2A TD 2.87k B	2.87kΩ	1
1A9373	R	51	RN73F2A TD 4.87k B	4.87kΩ	1
1A6051	R	29,54	RN73F2A TD 5.1k D	5.1kΩ	2
1A6062	R	14	RN73F2A TD 6.8k B	6.8kΩ	1
1A6072	R	69	RN73F2A TD 7.15k B	7.15kΩ	1
1A6011	R	2,26,27,36,52,68,76,77,79,82	RN73F2A TD 10k D	10kΩ	10
1A6046	R	18	RN73F2A TD 14.7k B	14.7kΩ	1
1A9380	R	32,33,50,53	RN73F2A TD 16k B	16kΩ	4
1A6034	R	45	RN73F2A TD 30k B	30kΩ	1
1A6047	R	63	RN73F2A TD 32.4k B	32.4kΩ	1
1A6040	R	15	RN73F2A TD 49.9k D	49.9kΩ	1
1A9387	R	64	RN73F2A TD 75k B	75kΩ	1
1A9398	R	10,11,28,56,70,71,96,99,100	RN73F2A TD 100k B	100kΩ	9
1B1586	C	42	ECST1VY474R	0.47uF/35V	1
1B1703	C	76,80,90	ECST1CY225	2.2uF/16V	3
1B0206	C	70,71,73,75,79,82,85	UUV1C100MFR	10uF/16V	7
1B5509	C	28	GRM39CH220J50	22pF	1
1B5524A	C	3,6,19,20,32,33,48	GRM39CH101J50	100pF	7
1B5543	C	1,17,22,34,47,51,58,67,68	GRM39B102J50	0.001uF	9
1B5461	C	5,21,36	GRM39B103K50	0.01uF	3

Parts No.	Location		Description		Q'ty
1B5568	C	2,4,7,8,9,10,11,12,13,14,15, 16,18,23,24,29,30,31,35,37, 38,39,40,41,43,44,45,46,49, 50,52,53,54,55,56,57,59,60, 61,62,63,64,65,83,84,86,89	GRM39F104Z25	0.1uF	47
1C0762	VR	5	ST-4B 5k		1
1C0847	VR	1	ST-7B 10K		1
1C1003	VR	2,6	ST-7B 100K		2
1C0835	VR	3	ST-5W 5K		1
1D3214	D	1,2,3,4,5,6,7,8,9,10,11,17, 18,19,25	MA198		15
1D3802	D	13,14,20	MA174		3
1D3856	D	12,24	MA160A		2
1D3878	D	26	MA726		1
1D3204	D	22	SFPB-74		1
1D4467	D	16	RD10M B		1
1D4661	D	15	RD18FM B		1
1D0919	Q	4,8	2SC4540		2
1D0117	Q	5,10	2SA1162Y		2
1D1732	Q	1,2	UN2212		2
1D2343	Q	6,9	2SK1079		2
1D2402	Q	7	2SJ377(SMD)		1
1E0823	IC	7,10	OP297GS		2
1E0833	IC	8	OPA177GS		1
1E0824	IC	17	OP42GS		1
1E0333	IC	13	uPC811G		1
1E0266	IC	12	uPC358G2		1
1E2464	IC	14	uPC393G		1
1E2686	IC	20	DG408DY		1
1E1232	IC	9	MAX630CSA		1
1E1123	IC	18	DAC7800KU		1
1E5552	IC	4	TC7W04FU		1
1E5554	IC	1	TC7W14FU		1
1E5558	IC	3	TC7W32FU		1
1E5564	IC	2,22	TC7W125FU		2
1E8850A	IC	6	EPM7032QC44-15 (P6619006A) HC-530		1
1E0619	IC	5	uPD5555G		1
1E6177	IC	15	PQ20VZ51		1
1E7413	IC	19	NJM79M09DLA		1
1E7004	IC	11,21	MAX875BCSA		2
1E1135A	IC	16	ADS7809U		1
1F1904	CN	2	FX2-32S-1.27SV		1
1F0663	CN	4	FH10A-7S-1SH		1
1L5321	L	1,3,4,5,6,10,11,12,13,14,17, 19	BLM21A102S		12
1L5320	L	2,7,8,9,16	BLM41A800S		5
1T8021	L	18,20,21,22,23	PLM3216K281SJ2		5
1T8017	L	15	CDRH125 39uH		1
1L5336	NF	1,4,5,6,7	NFM60R30T222		5
1K1815	TP	1,2,4,5,6,7,8,9,10,11	HK-5-S(Orange)		10
1K1816	TP	3	HK-5-S(Black)		1
1R5703	RM	1	EXB-M16P 22kΩ		1
1L1353B	LED	1	SLM-1251MW		1
1H6619A			PCB-6619A		1

●9G6463 6619 THD HC-530 674-14810

Parts No.	Location		Description		Q'ty
1A5313A	R	93	SN14C2E 20 F	20Ω	1
1A5329	R	92	SN14C2E 28 F	28Ω	1
1A4394B	R	97	SN14C2C 100 F	100Ω	1
1A4422A	R	84,85	SN14C2C 182 F	182Ω	2
1A4526B	R	91	SN14C2C 1.5k F	1.5kΩ	1
1A4565B	R	90	SN14C2C 3.3k F	3.3kΩ	1
1A4679B	R	89	SN14C2C 33k F	33kΩ	1
1A5911	R	47	SN14C2E 2.2MD	2.2MΩ	1
1B4167A	C	74	ECQ-V1H104JL	0.1uF	1
1B4365	C	72,77,78	ECQ-V1H224JL	0.22uF	3
1B4712	C	69	ECQ-V1H105JL	1uF	1
1B8429	C	88	16SC10M	10uF/16V	1
1B8512	C	81,87	25SC47M	47uF/25V	2
1B8614	C	26	16SH150M	150uF/16V	1
1D6417	D	21	MA2B027QB		1
1F2902	CN	3	FX2-C1-20P-1.27DSAL		1
1F2856	CN	5	DF3-9P-2DSA(01)		1
1F8411	CN	6	DF3-8P-2DSA(01)		1
1F8310	CN	7	DF3-2P-2DSA(01)		1
1F0156	JP	1	PS-2PF-D4TI-PKL1		1
1F0155	JP	1	PS-2SH4-1		1

●9E3518 Assembled components HC-530 674-14806

Parts No.	Location		Description		Q'ty
1G9415			Switch panel HC-530	684-3243	1

●9D2805 Wiring component HC-530 674-14807

Parts No.	Location		Description		Q'ty
1M0853			Input connector cable	434-5505	1
1M0854			Micro-switch cable	434-5506	1

Blank Page

Chapter 10

Circuit Diagrams

HJ-500 10-1
HJAMP 10-1
HJRESP 10-12
HJCPU 10-20
HJPWR 10-31

HC-530 10-35
IF Board PCB-6597 523-2184 10-35
TCP Board PCB-6619 523-2233 10-46

CONTENTS

HJAMP1
1| CONNECTER

HJAMP2
2| INPUT BUF

HJAMP3
3| SAMP1

HJAMP4
4| SAMP2

HJAMP5
5| SAMP3

HJAMP6
6| INST MONI CONTROL1

HJAMP7
7| INST MONI CONTROL2

HJAMP8
8| FILTER

HJAMP9
9| LEAD OFF

HJAMP10
10| OPEN

TITLE		DRAWING NO.
HJAMP CONNECTOR **0/10**		
MODEL NO. **HJ-500**	ASSEMBLY NO.	DATE

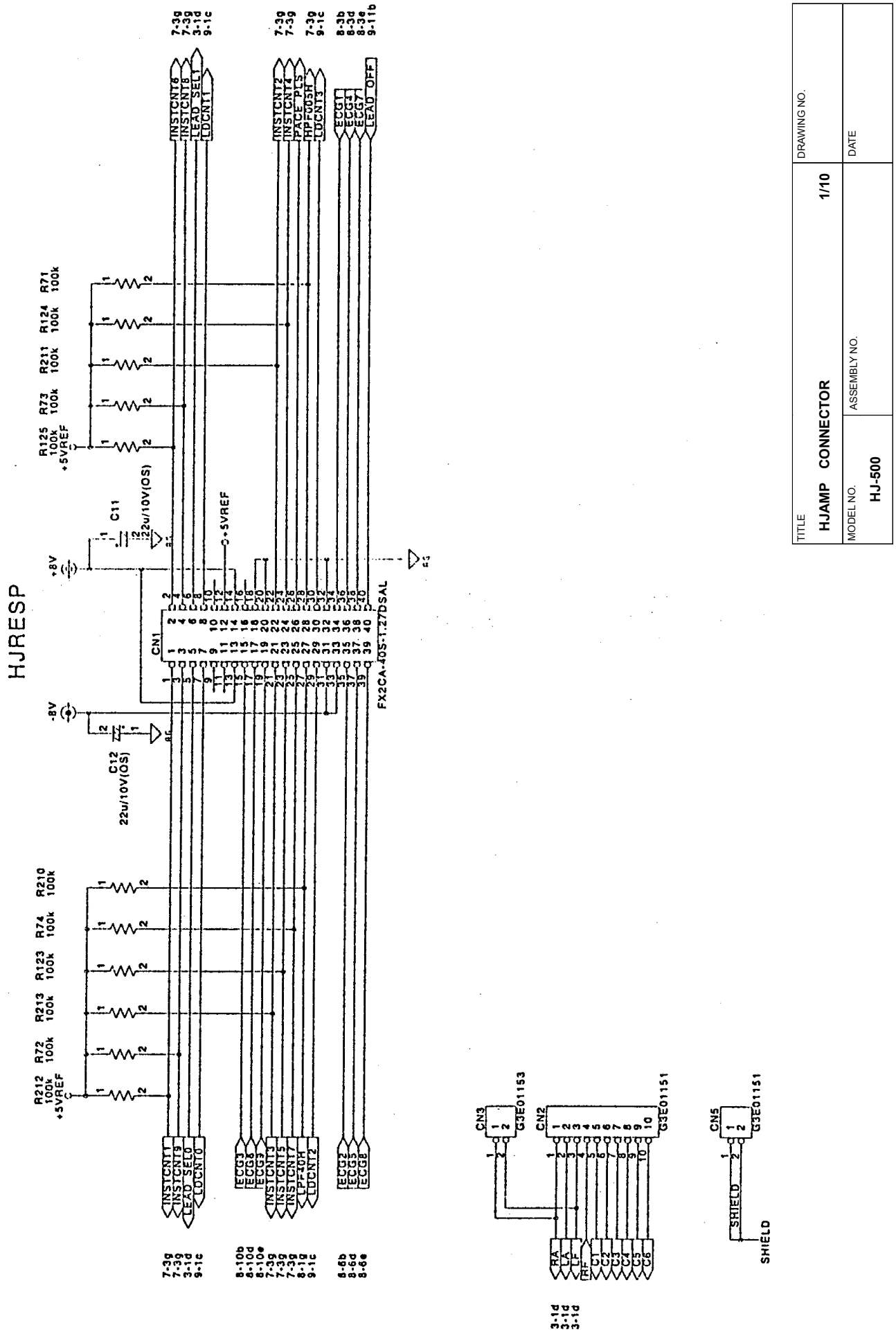

TITLE: HJAMP CONNECTOR 1/10		DRAWING NO.
MODEL NO.: HJ-500	ASSEMBLY NO.	DATE

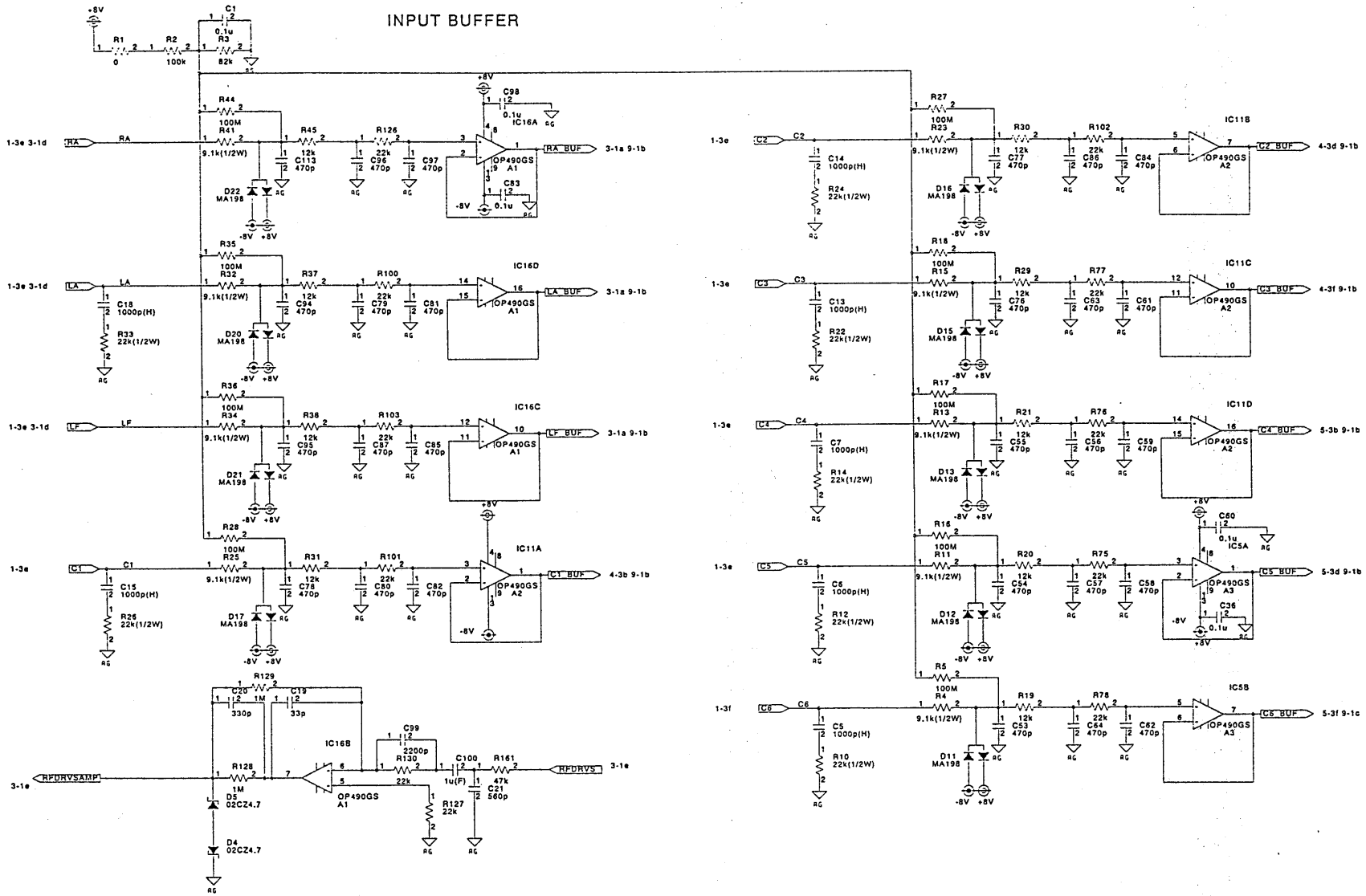

TITLE		DRAWING NO.
HJAMP INPUT BUF **2/10**		
MODEL NO. **HJ-500**	ASSEMBLY NO.	DATE

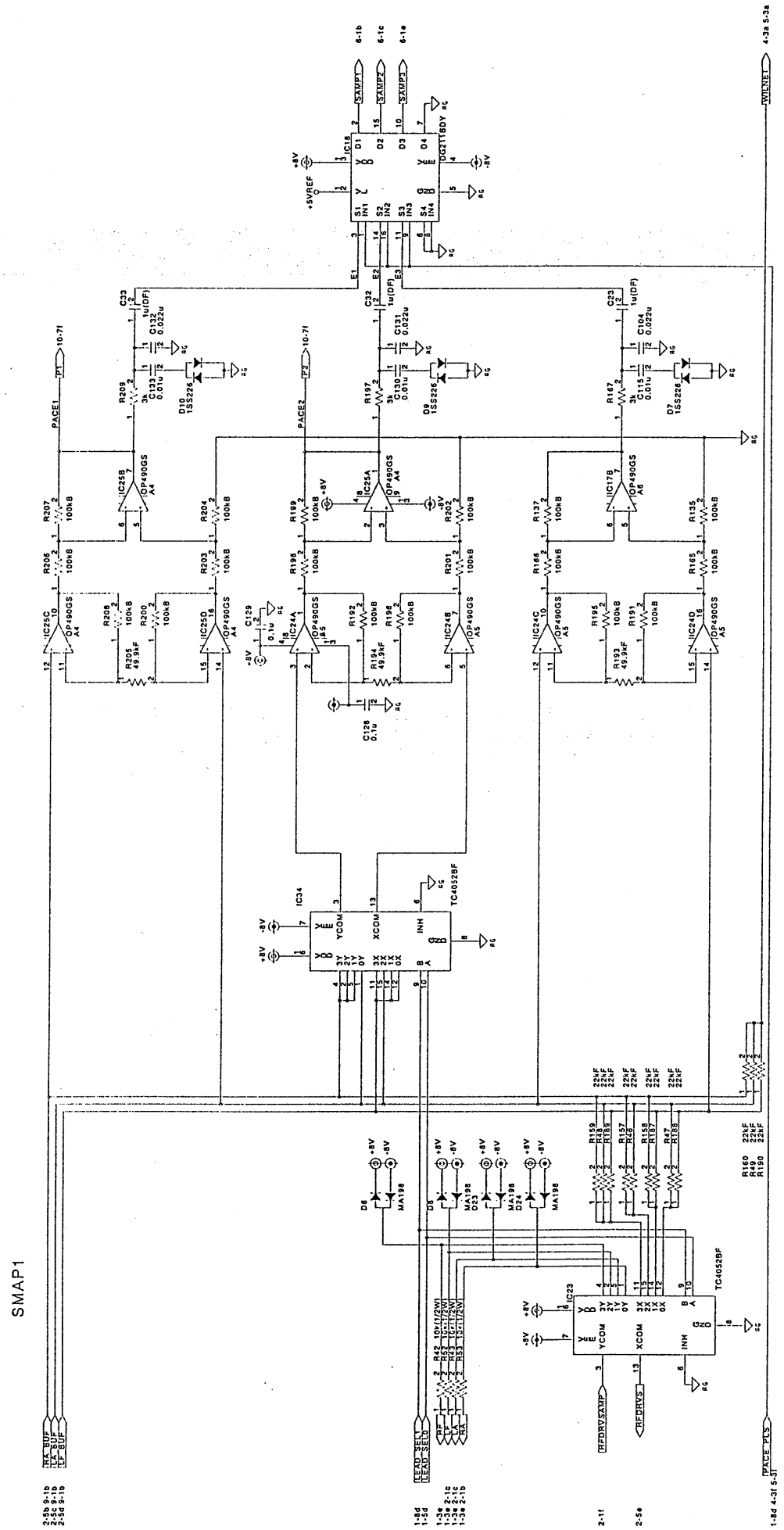
SMAP1
TITLE
HJAMP SAMP1
3/10
DRAWING NO.
MODEL NO.
HJ-500
ASSEMBLY NO.
DATE

SAMP2

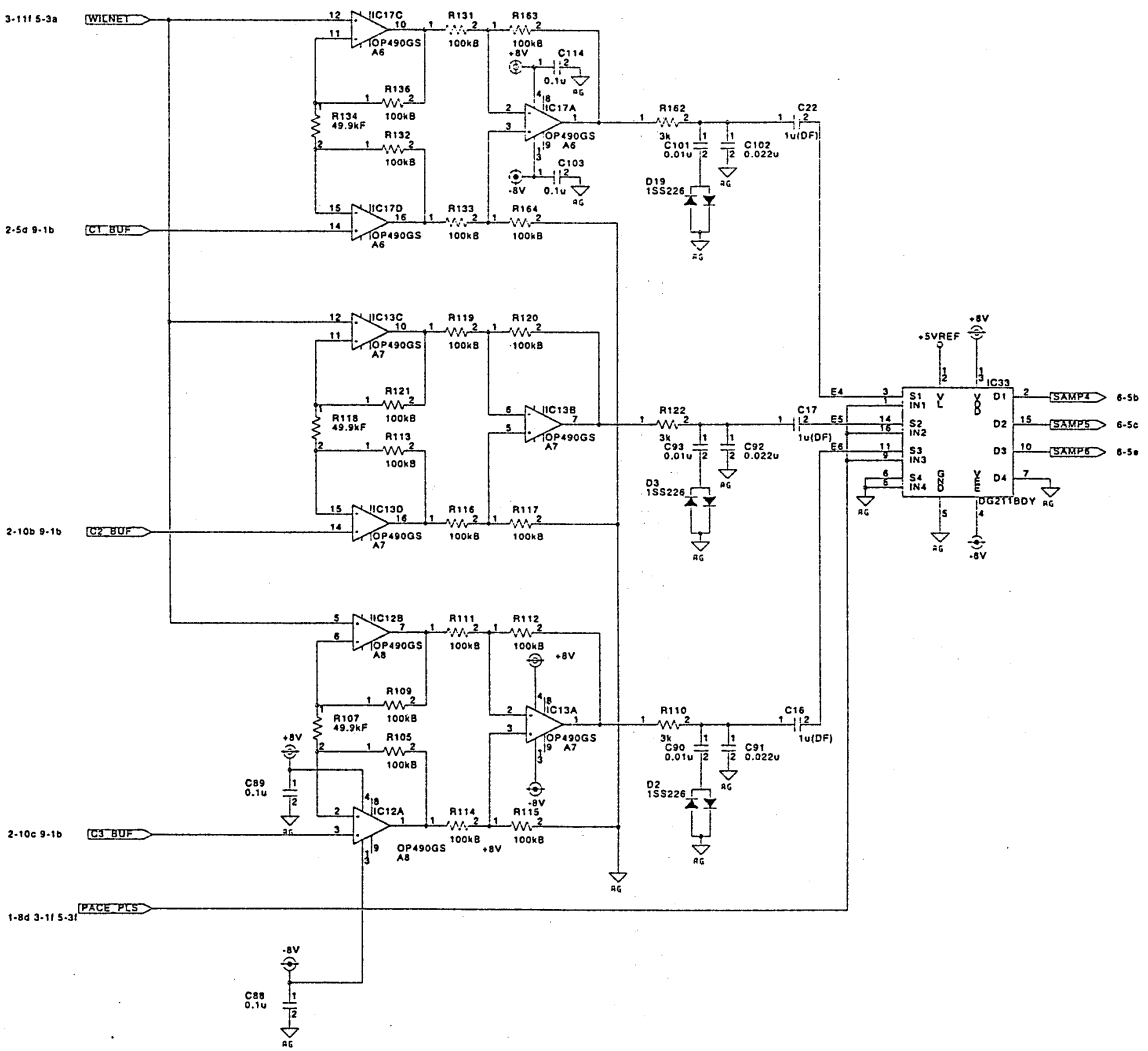

TITLE		DRAWING NO.
HJAMP SAMP2 **4/10**		
MODEL NO. **HJ-500**	ASSEMBLY NO.	DATE

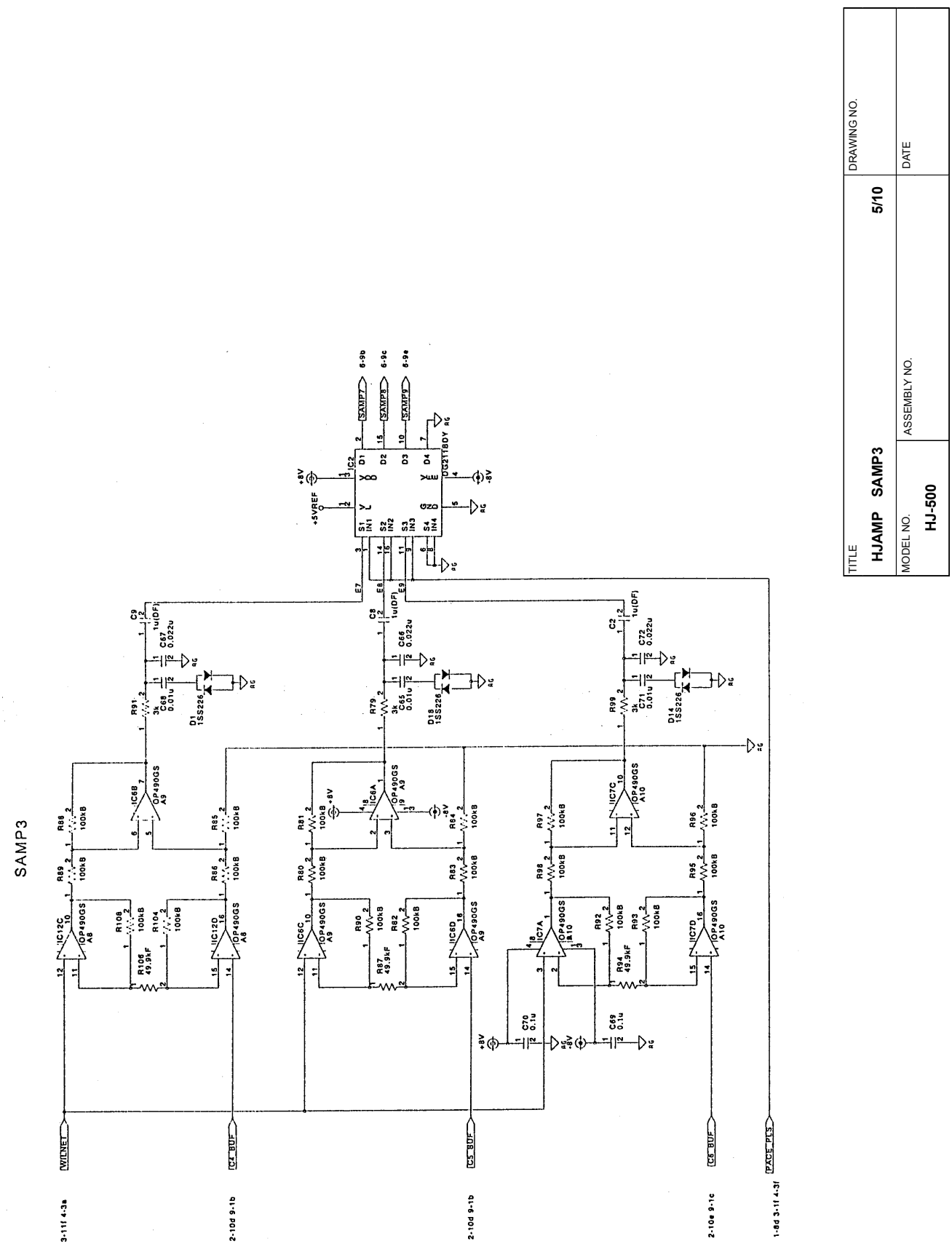
SAMP3
TITLE
HJAMP SAMP3
5/10
DRAWING NO.
MODEL NO.
HJ-500
ASSEMBLY NO.
DATE

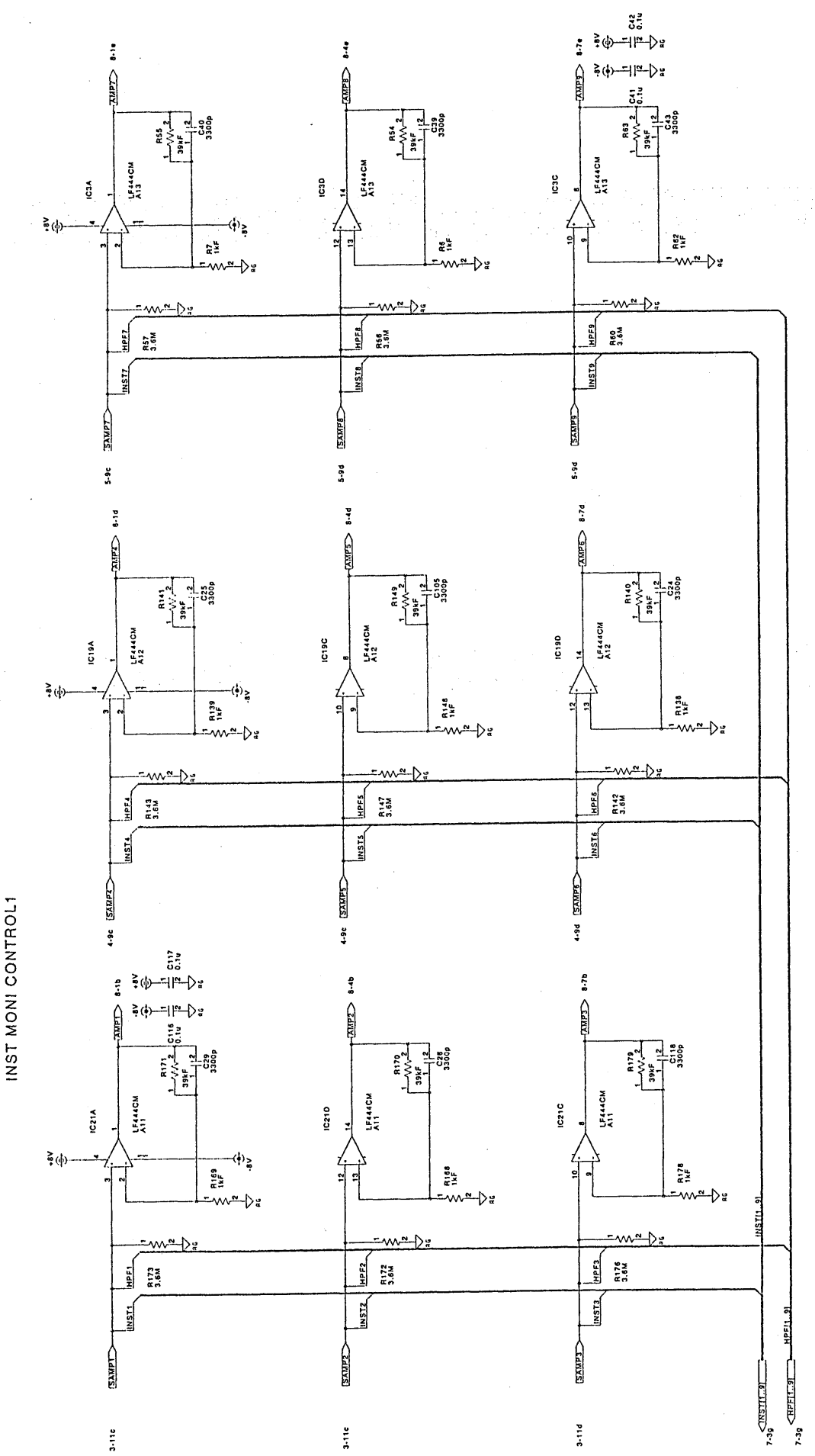

TITLE	DRAWING NO.
HJAMP INST MONI CONTROL1 **6/10**	
MODEL NO. **HJ-500**	ASSEMBLY NO.
	DATE

INST MONI CONTROL2

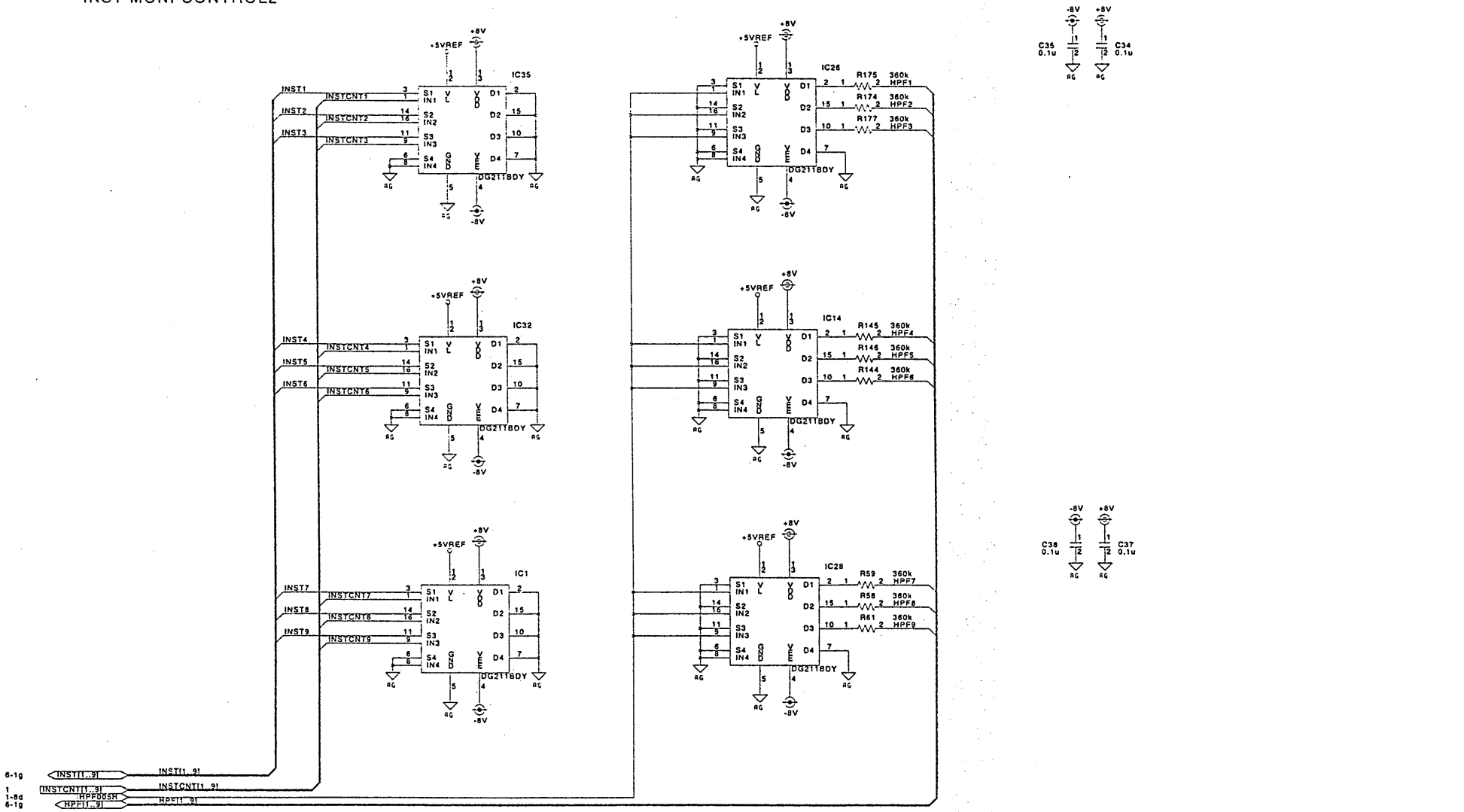

TITLE		DRAWING NO.
HJAMP INST MONI CONTROL2 7/10		
MODEL NO. **HJ-500**	ASSEMBLY NO.	DATE

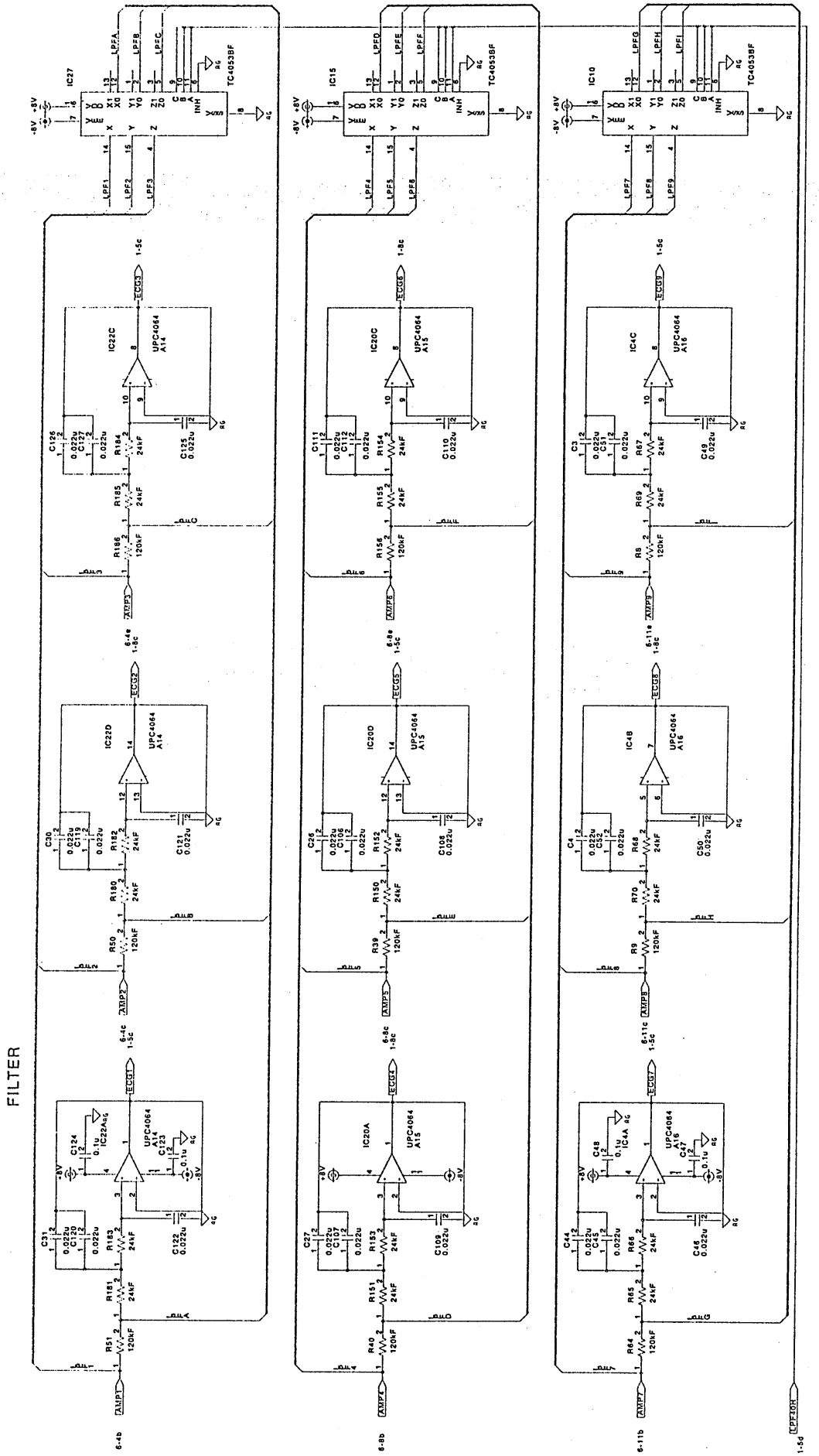

TITLE	DRAWING NO.
HJAMP FILTER	**8/10**
MODEL NO.	ASSEMBLY NO.
HJ-500	DATE

LEAD OFF

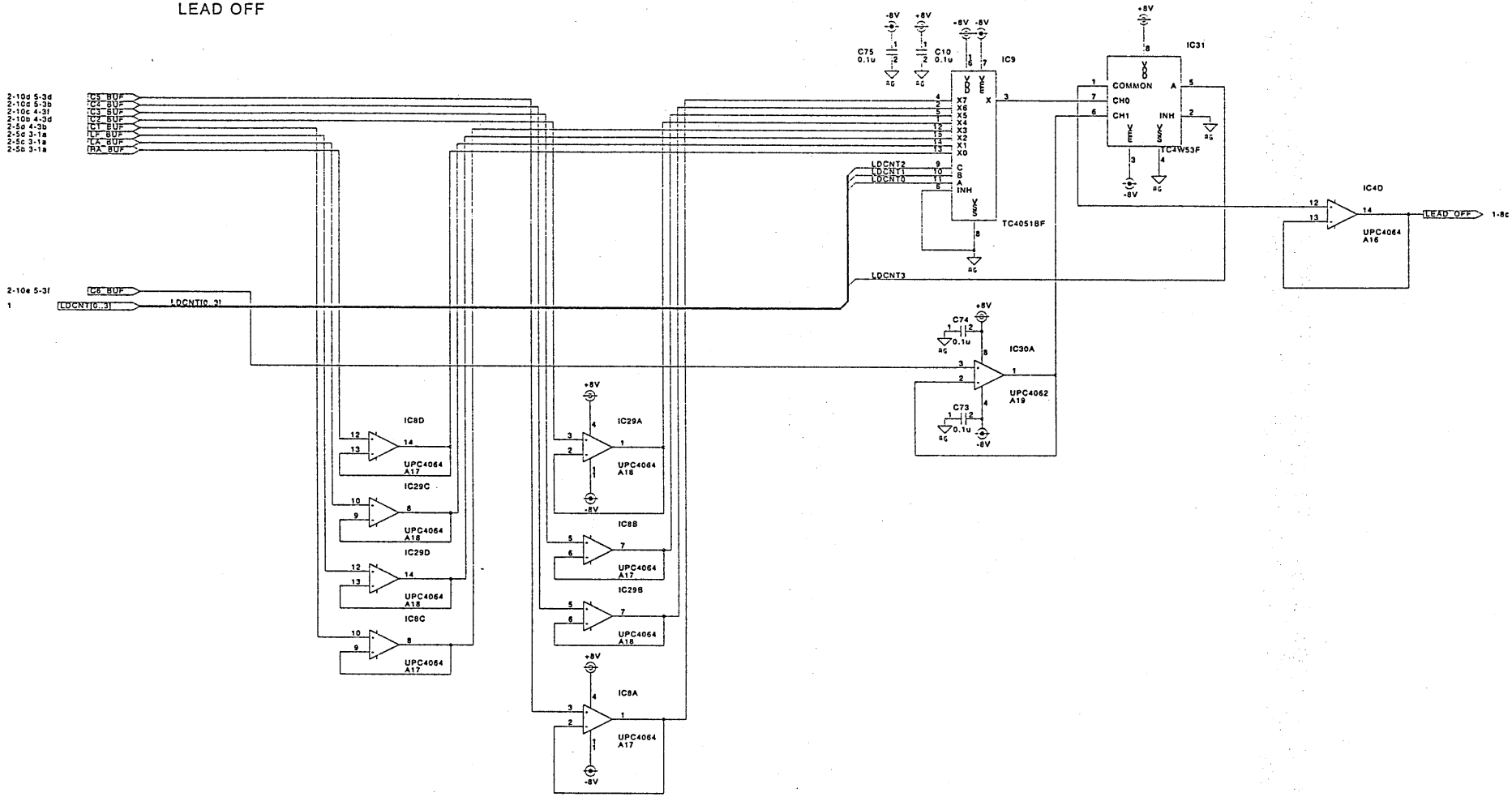

TITLE		DRAWING NO.
HJAMP LEAD OFF **9/10**		
MODEL NO. **HJ-500**	ASSEMBLY NO.	DATE

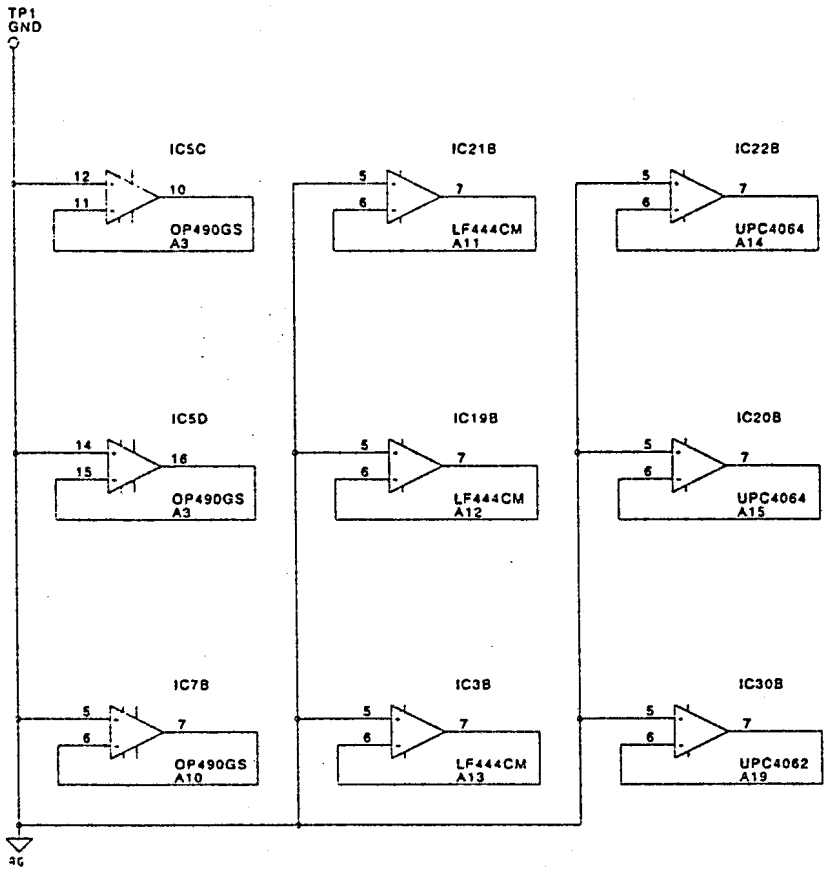

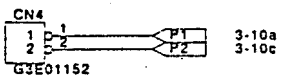

TITLE		DRAWING NO.
HJAMP OPEN 10/10		
MODEL NO. HJ-500	ASSEMBLY NO.	DATE

CONTENTS

HJRESP1
1 CONNECT
HJRESP2
2 RESP
HJRESP3
3 PACE PLS
HJRESP4
4 MPX
HJRESP5
5 A/D
HJRESP6
6 EXTRA OUT
HJRESP7
7 OPEN

TITLE		DRAWING NO.
HJRESP **0/7**		
MODEL NO. **HJ-500**	ASSEMBLY NO.	DATE

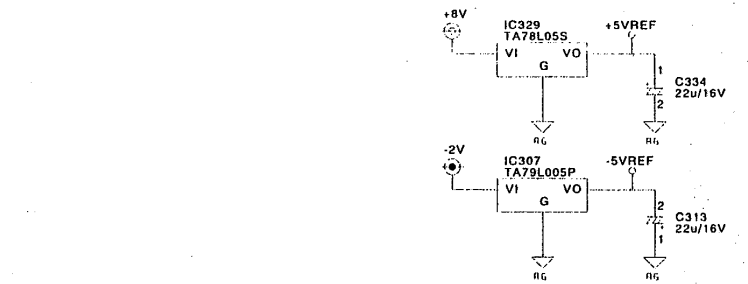

HJAMP

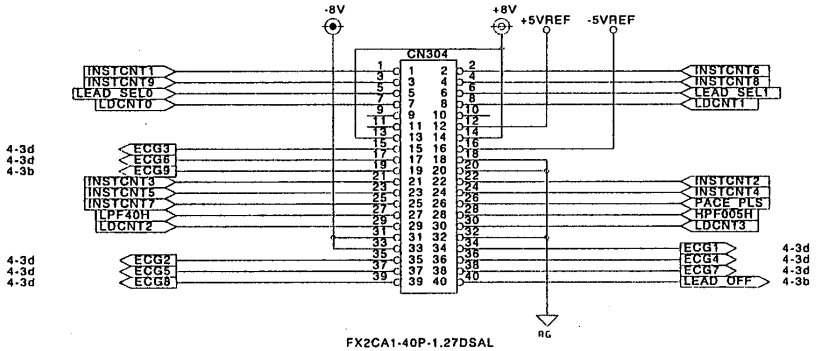

FX2CA1-40P-1.27DSAL

HJCPU

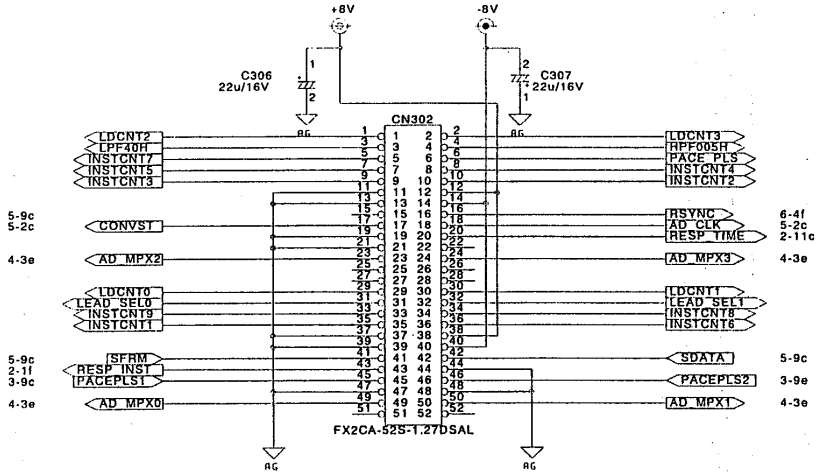

FX2CA-52S-1.27DSAL

TITLE		DRAWING NO.
HJRESP CONNECT 1/7		
MODEL NO. **HJ-500**	ASSEMBLY NO.	DATE

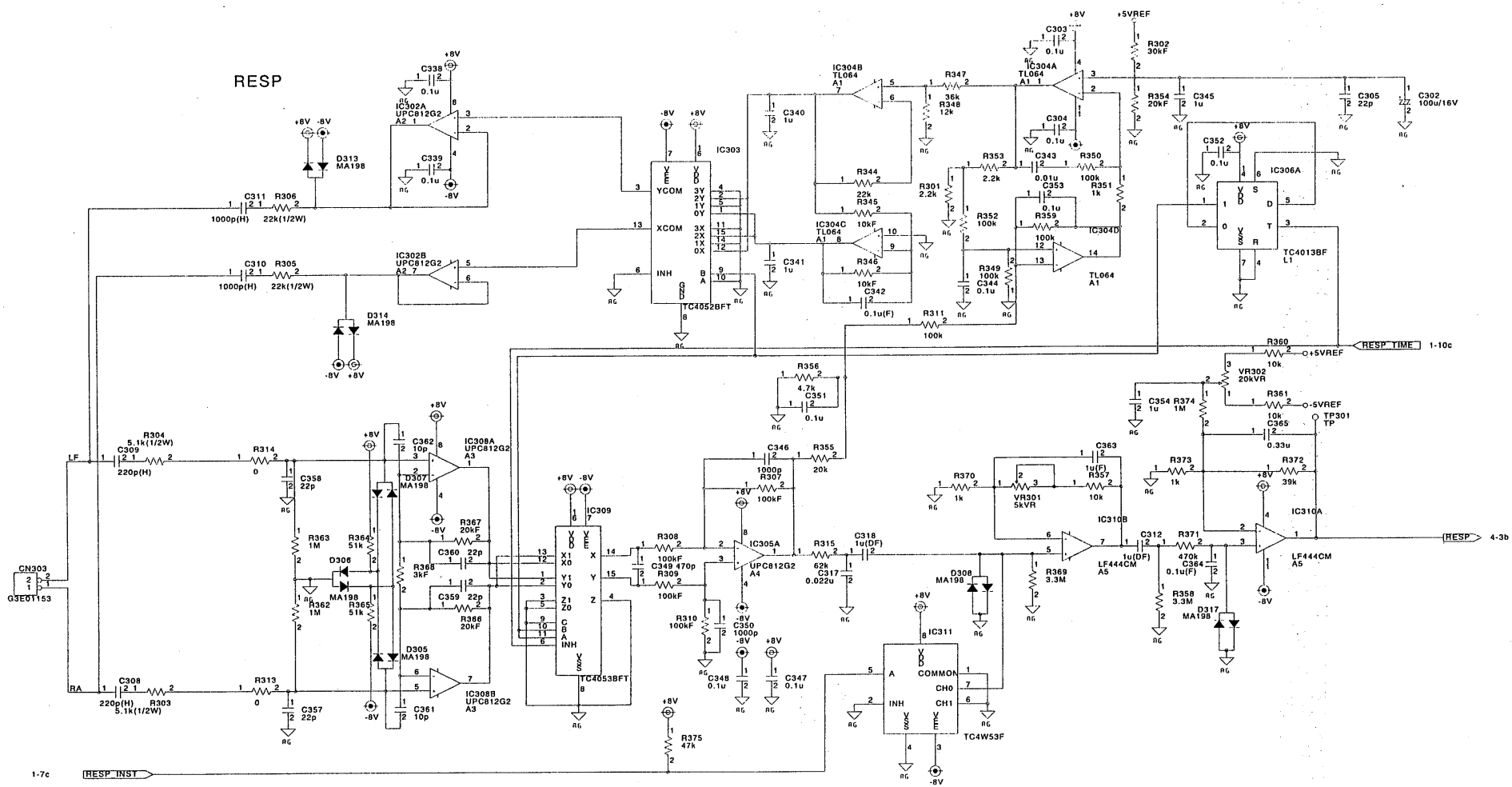

TITLE		DRAWING NO.
HJRESP RESP	2/7	
MODEL NO.	ASSEMBLY NO.	DATE
HJ-500		

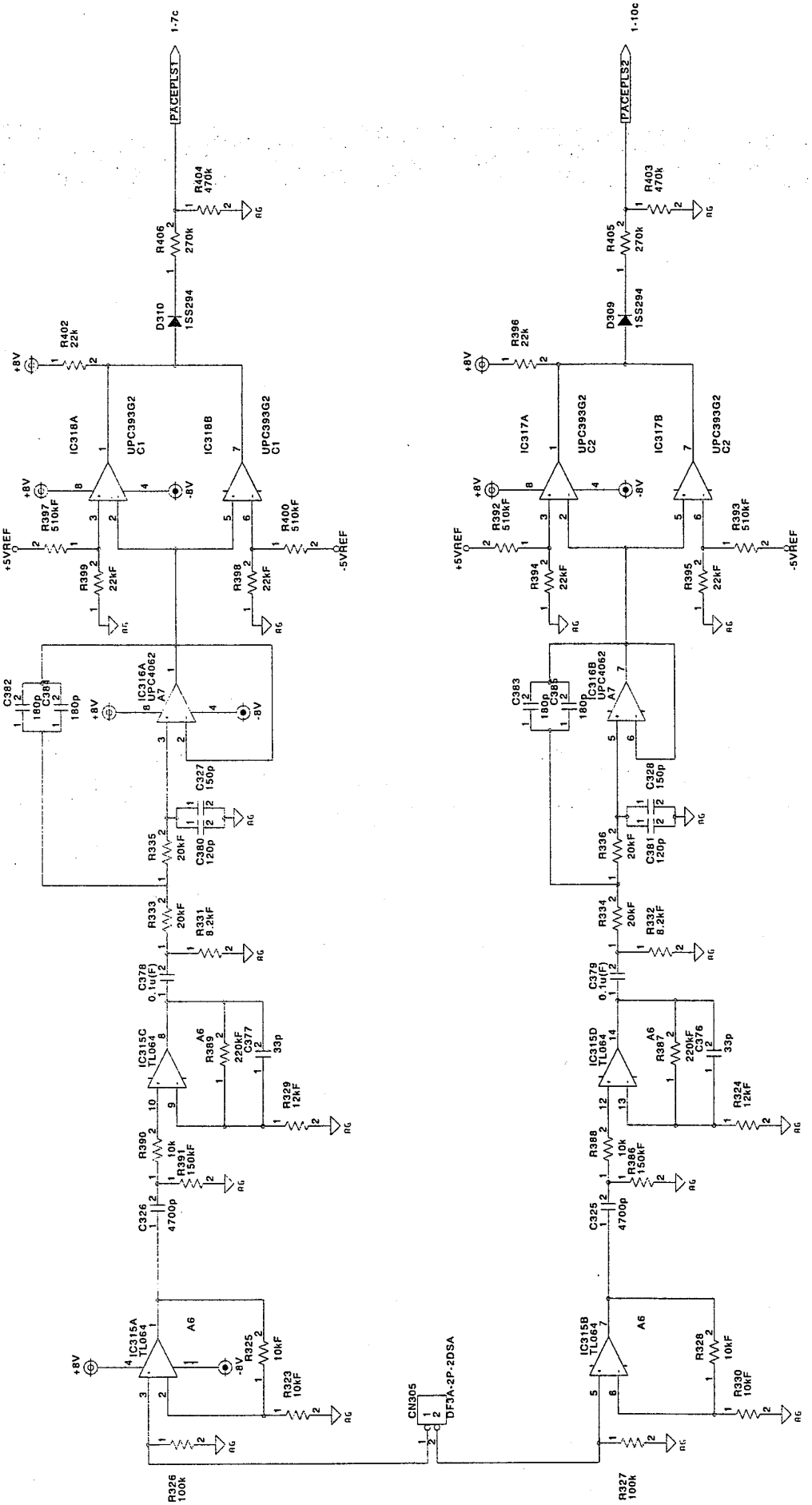

TITLE		DRAWING NO.
HJRESP PACE PLS	**3/7**	
MODEL NO.	ASSEMBLY NO.	DATE
HJ-500		

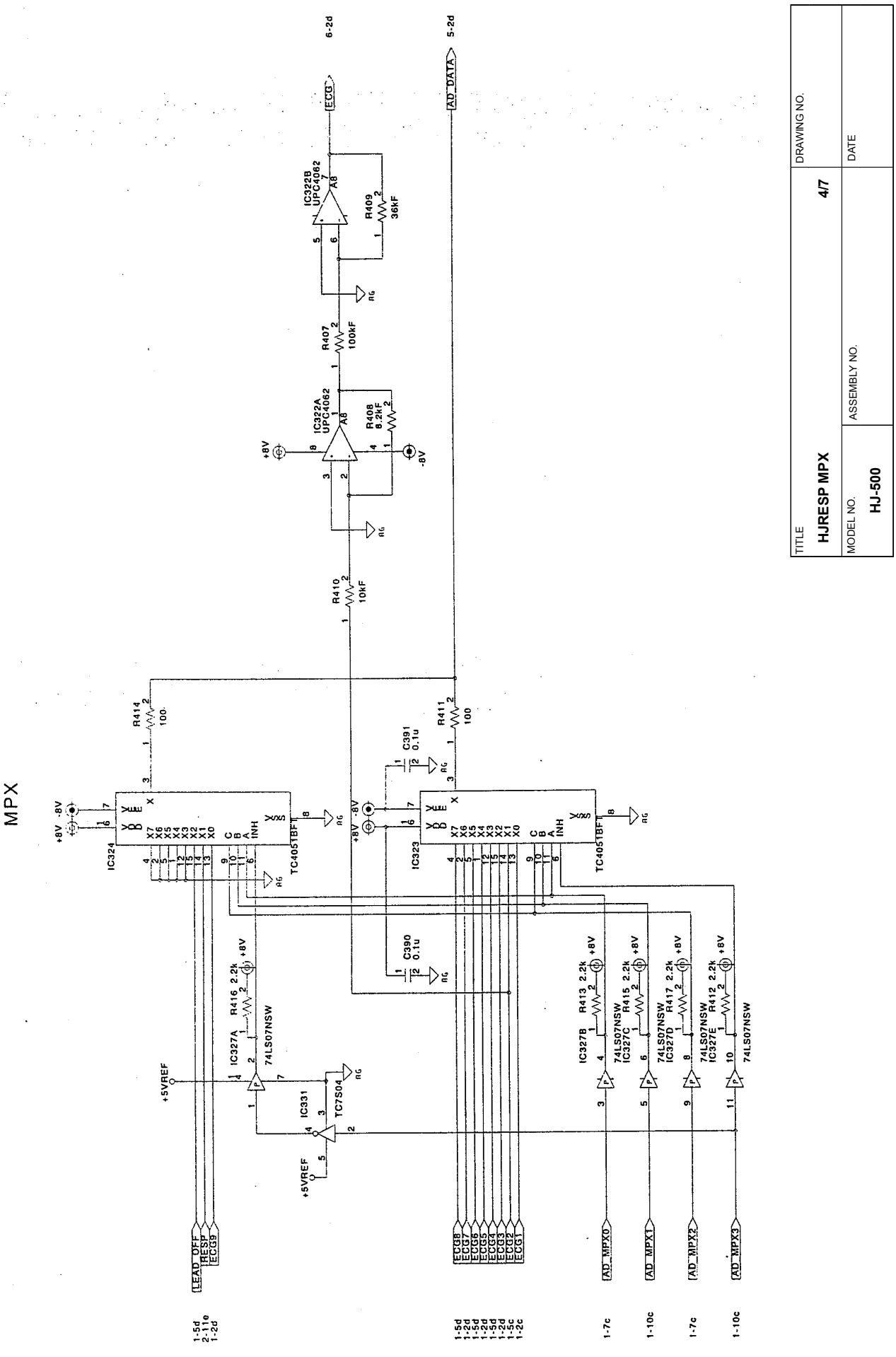
MPX
TITLE
HJRESP MPX
4/7
DRAWING NO.
MODEL NO.
HJ-500
ASSEMBLY NO.
DATE
ECG
AD_DATA
IC322B UPC4062
IC322A UPC4062
R409 36kF
R407 100kF
R408 8.2kF
R410 10kF
R411 100
R414 100
C391 0.1u
C390 0.1u
IC324
IC323
TC4051BF
IC327A 74LS07NSW
IC327B 74LS07NSW
IC327C 74LS07NSW
IC327D 74LS07NSW
IC327E 74LS07NSW
R413 2.2k
R415 2.2k
R417 2.2k
R412 2.2k
R416 2.2k
IC331 TC7S04
+5VREF
+8V
-8V
LEAD_OFF
RESP
ECG9
ECG8
ECG7
ECG6
ECG5
ECG4
ECG3
ECG2
ECG1
AD_MPX0
AD_MPX1
AD_MPX2
AD_MPX3

A/D

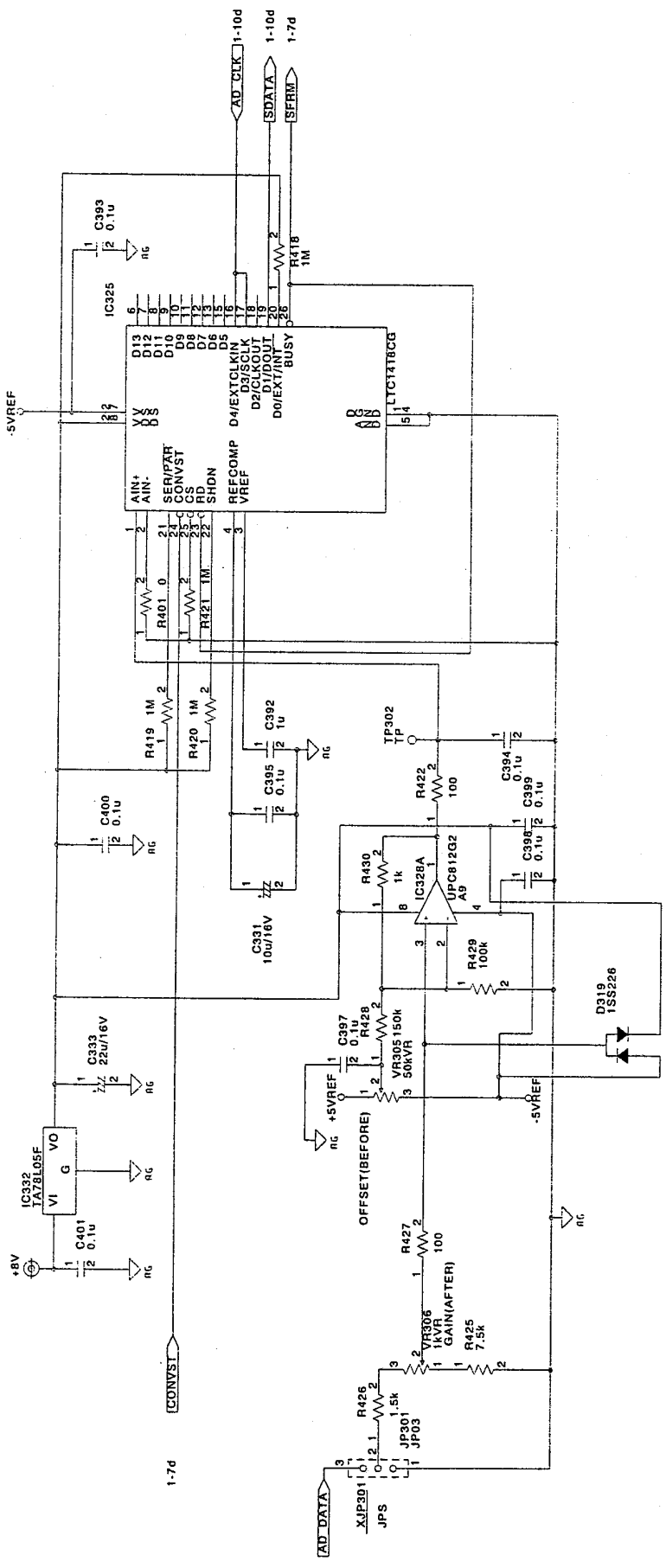

TITLE **HJRESP A/D**	**5/7**	DRAWING NO.
MODEL NO. **HJ-500**	ASSEMBLY NO.	DATE

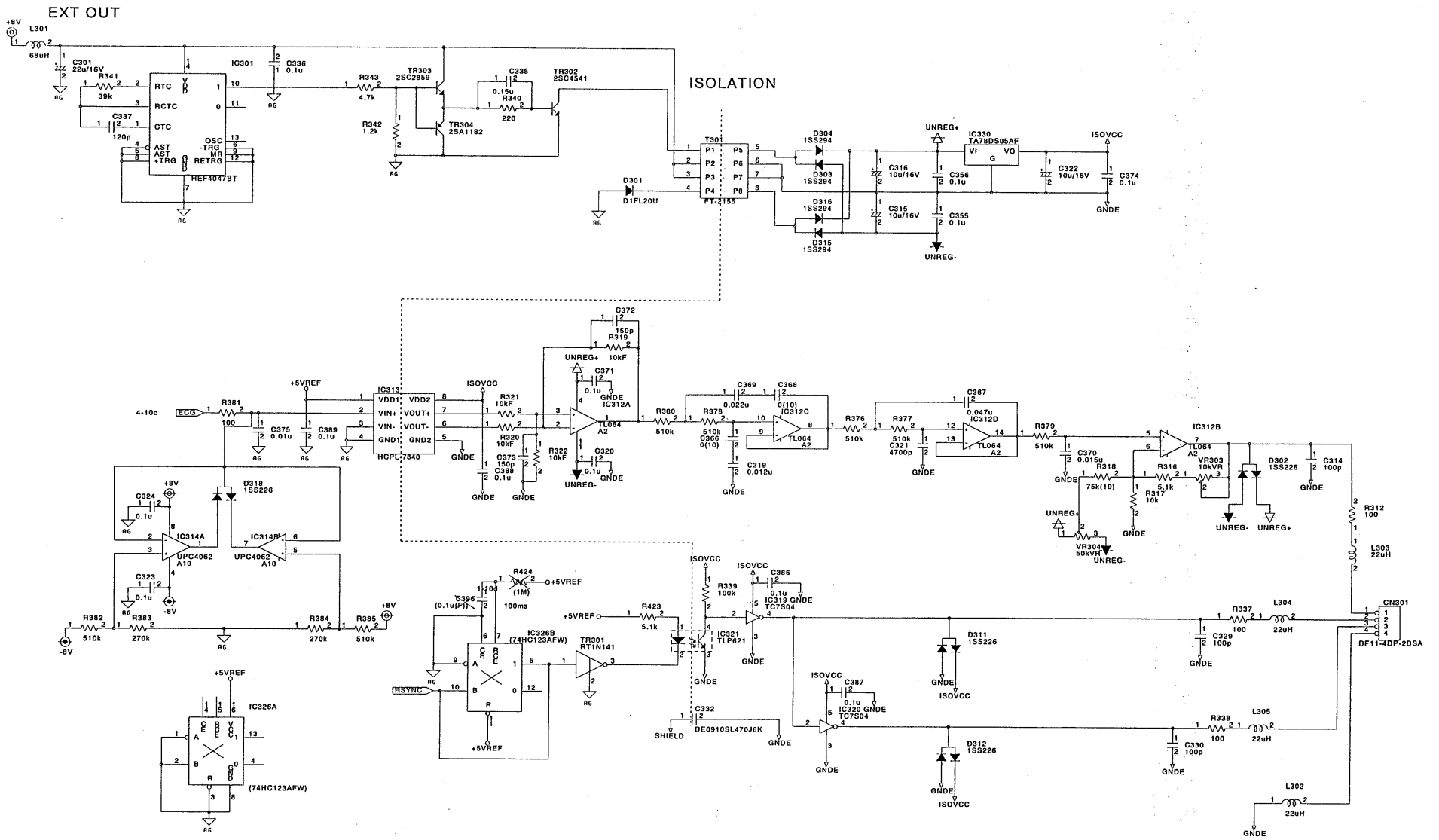

TITLE		DRAWING NO.
HJRESP EXTRA OUT **6/7**		
MODEL NO. **HJ-500**	ASSEMBLY NO.	DATE

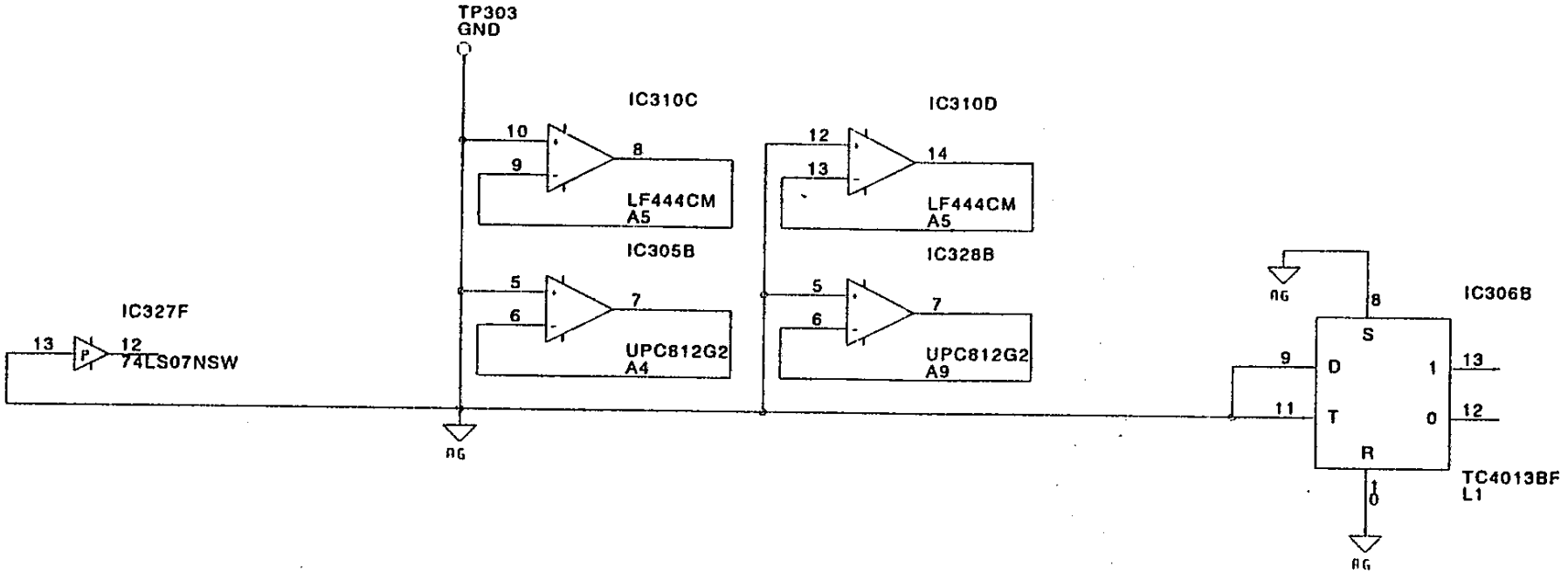

TITLE		DRAWING NO.
HJRESP OPEN 7/7		
MODEL NO. HJ-500	ASSEMBLY NO.	DATE

CONTENTS

HJCPU1
1 CONNECTER
HJCPU2
2 MPU
HJCPU3
3 FLASH,DRAM
HJCPU4
4 SRAM
HJCPU5
5 PLD
HJCPU6
6 HDLC
HJCPU7
7 A/D CONTROL
HJCPU8
8 PACE
HJCPU9
9 TEMP CONTROL
HJCPU10
10 OPEN

TITLE		DRAWING NO.
HJCPU **0/10**		
MODEL NO. **HJ-500**	ASSEMBLY NO.	DATE

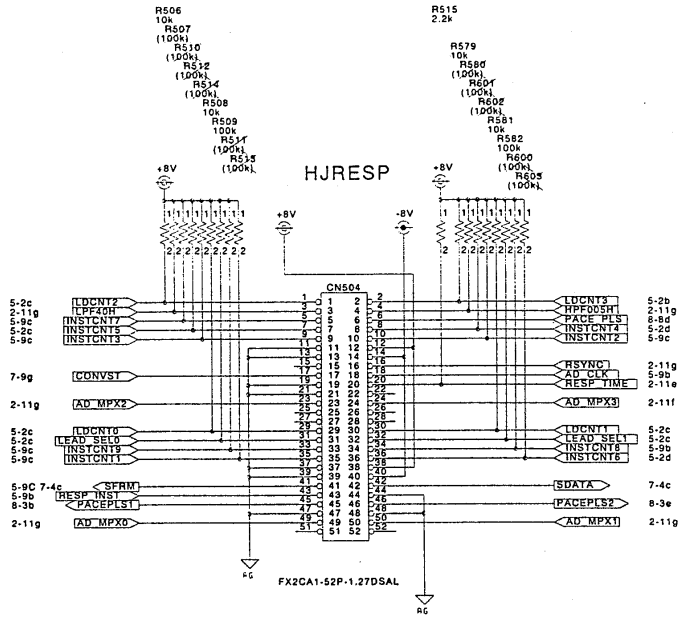

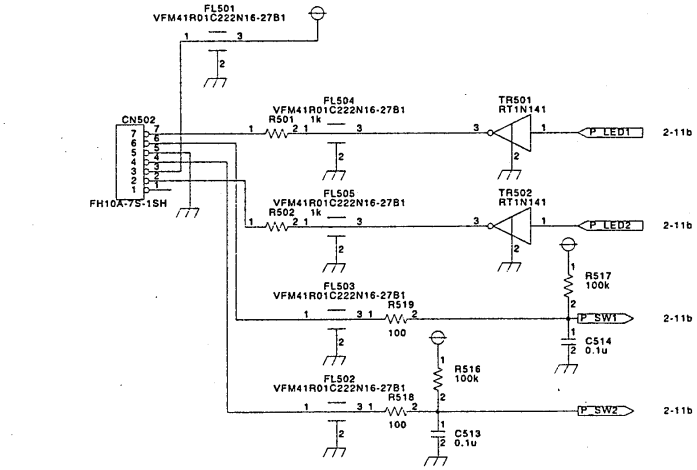

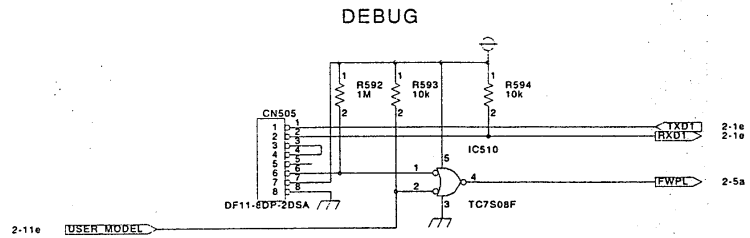

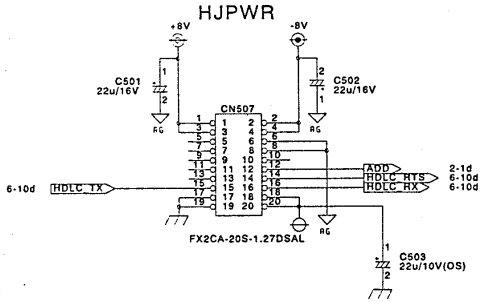

TITLE		DRAWING NO.
HJCPU CONNECTOR **1/10**		
MODEL NO. **HJ-500**	ASSEMBLY NO.	DATE

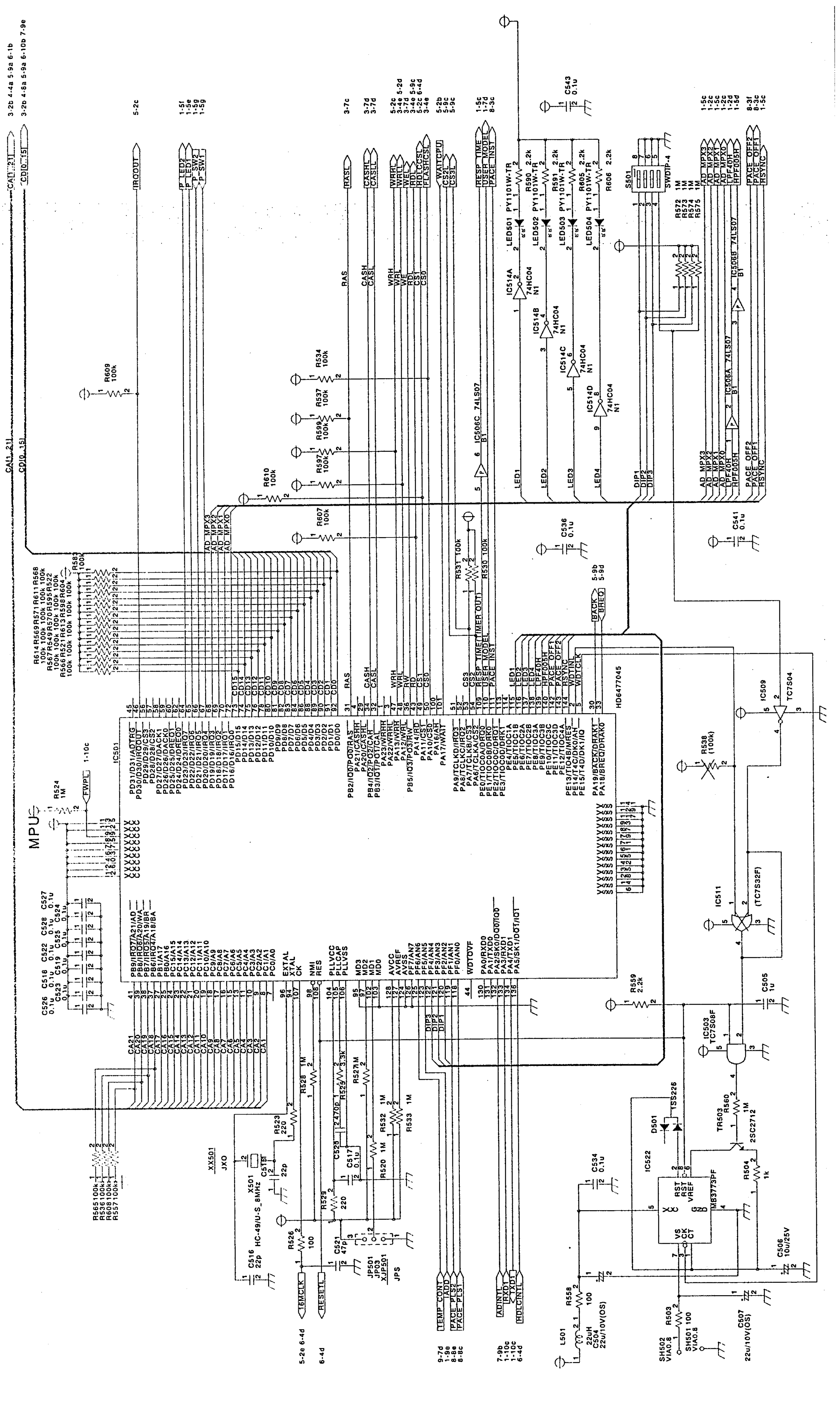

TITLE		DRAWING NO.
HJCPU MPU		**2/10**
MODEL NO.	ASSEMBLY NO.	DATE
HJ-500		

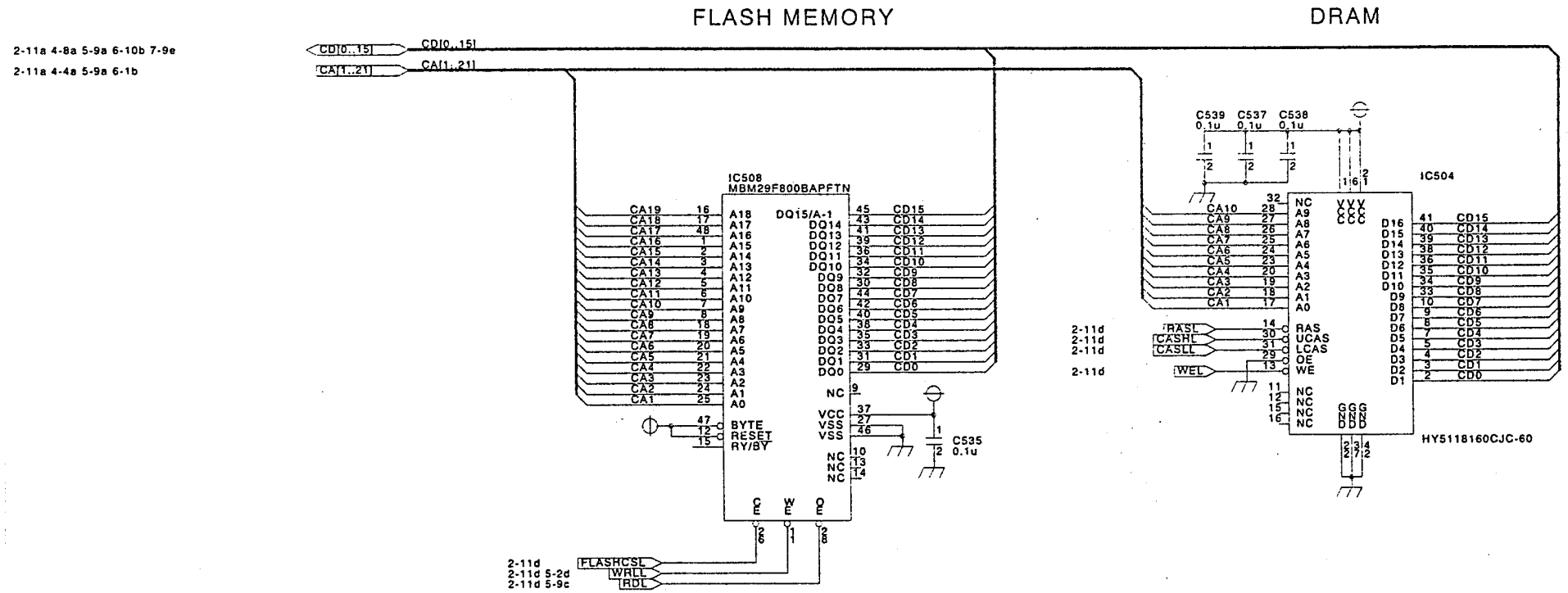

TITLE		DRAWING NO.
HJCPU FLASH,DRAM 3/10		
MODEL NO. HJ-500	ASSEMBLY NO.	DATE

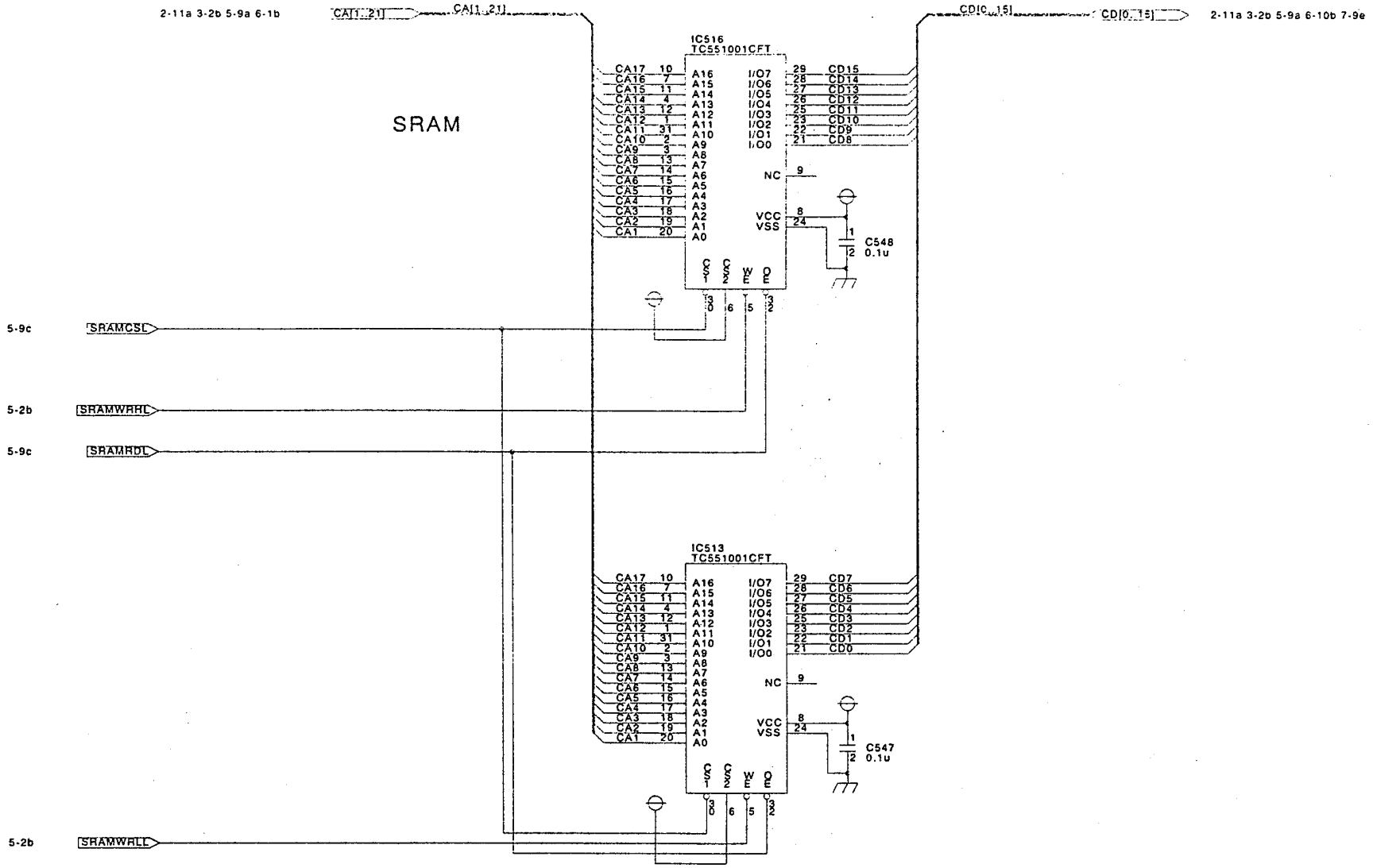

TITLE		DRAWING NO.
HJCPU SRAM 4/10		
MODEL NO. HJ-500	ASSEMBLY NO.	DATE

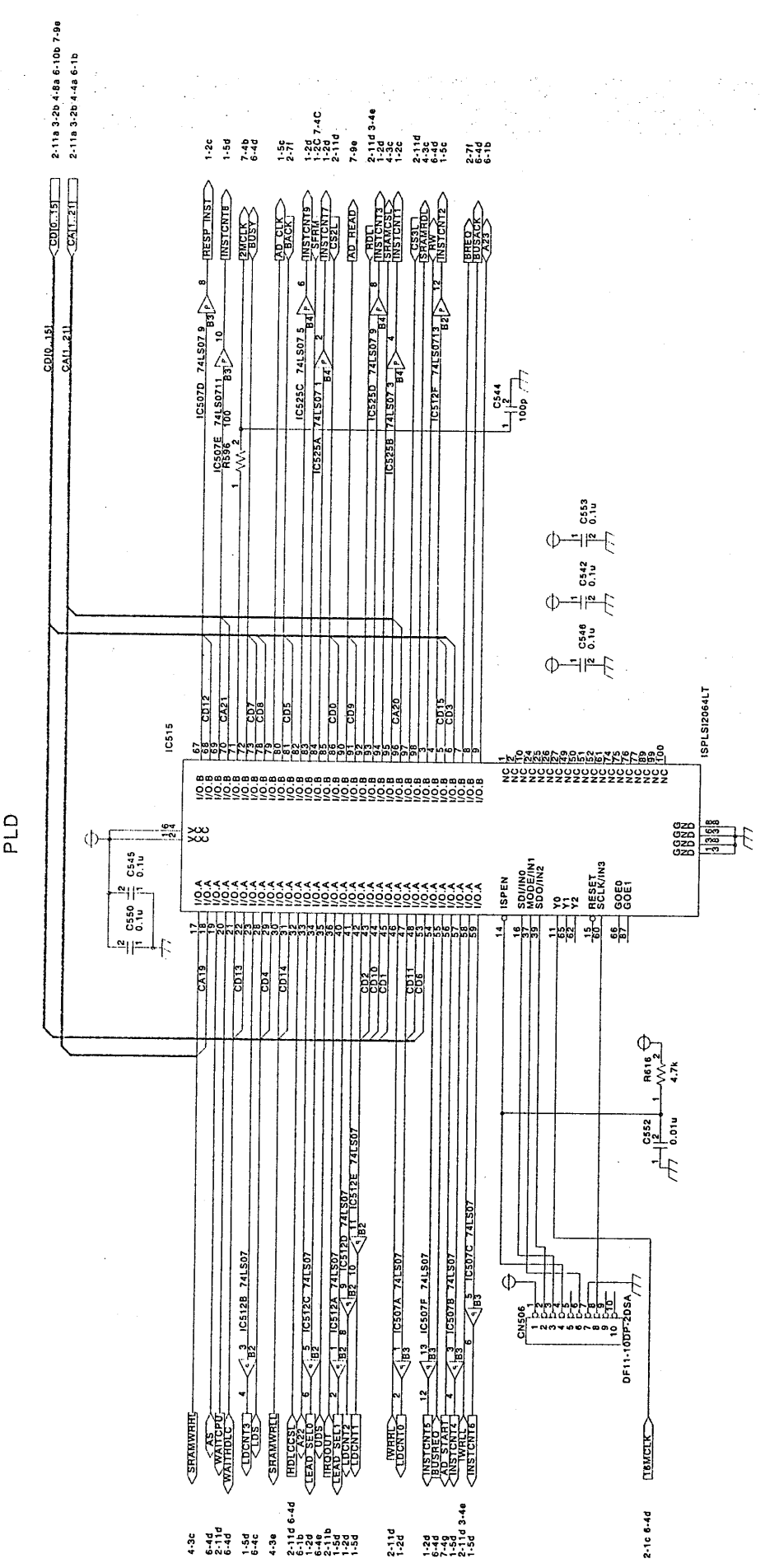

TITLE: **HJCPU PLD**	**5/10**	DRAWING NO.
MODEL NO.: **HJ-500**	ASSEMBLY NO.	DATE

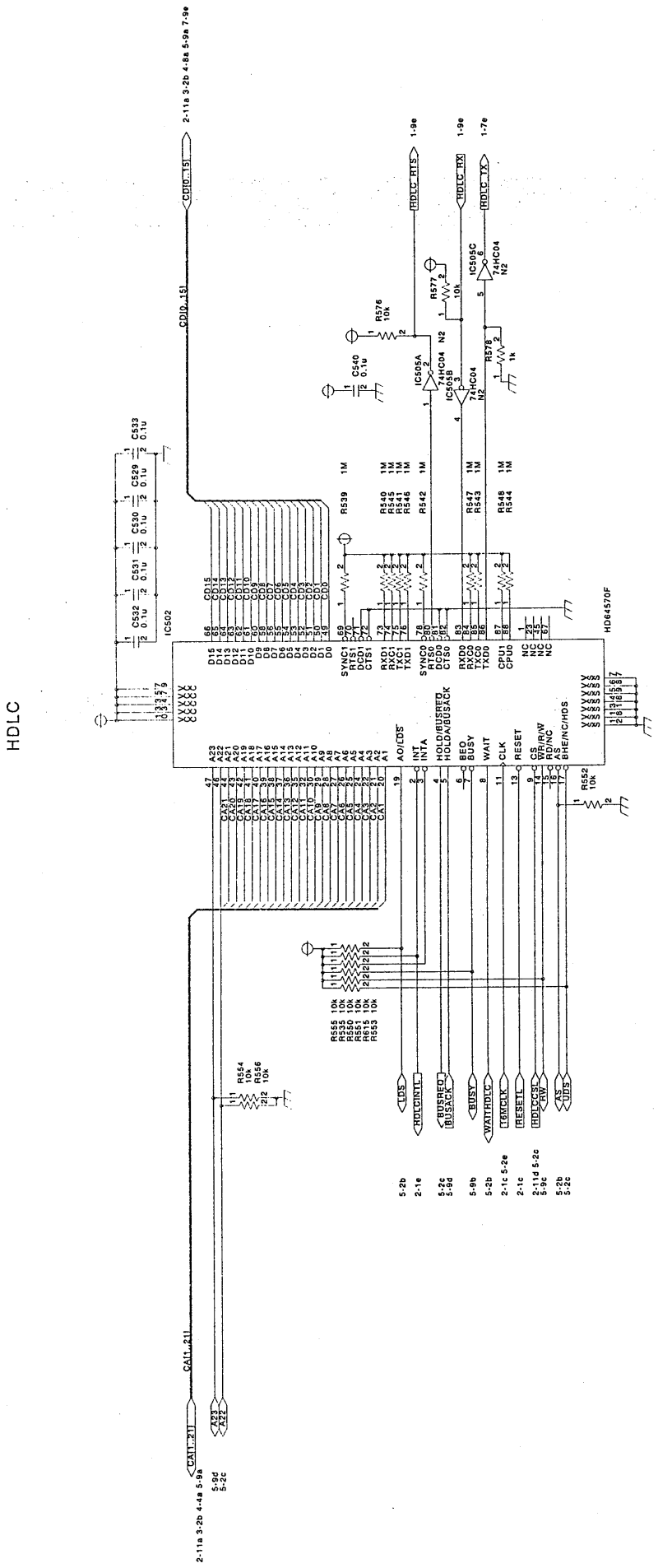

TITLE **HJCPU HDLC**	**6/10**	DRAWING NO.
MODEL NO. **HJ-500**	ASSEMBLY NO.	DATE

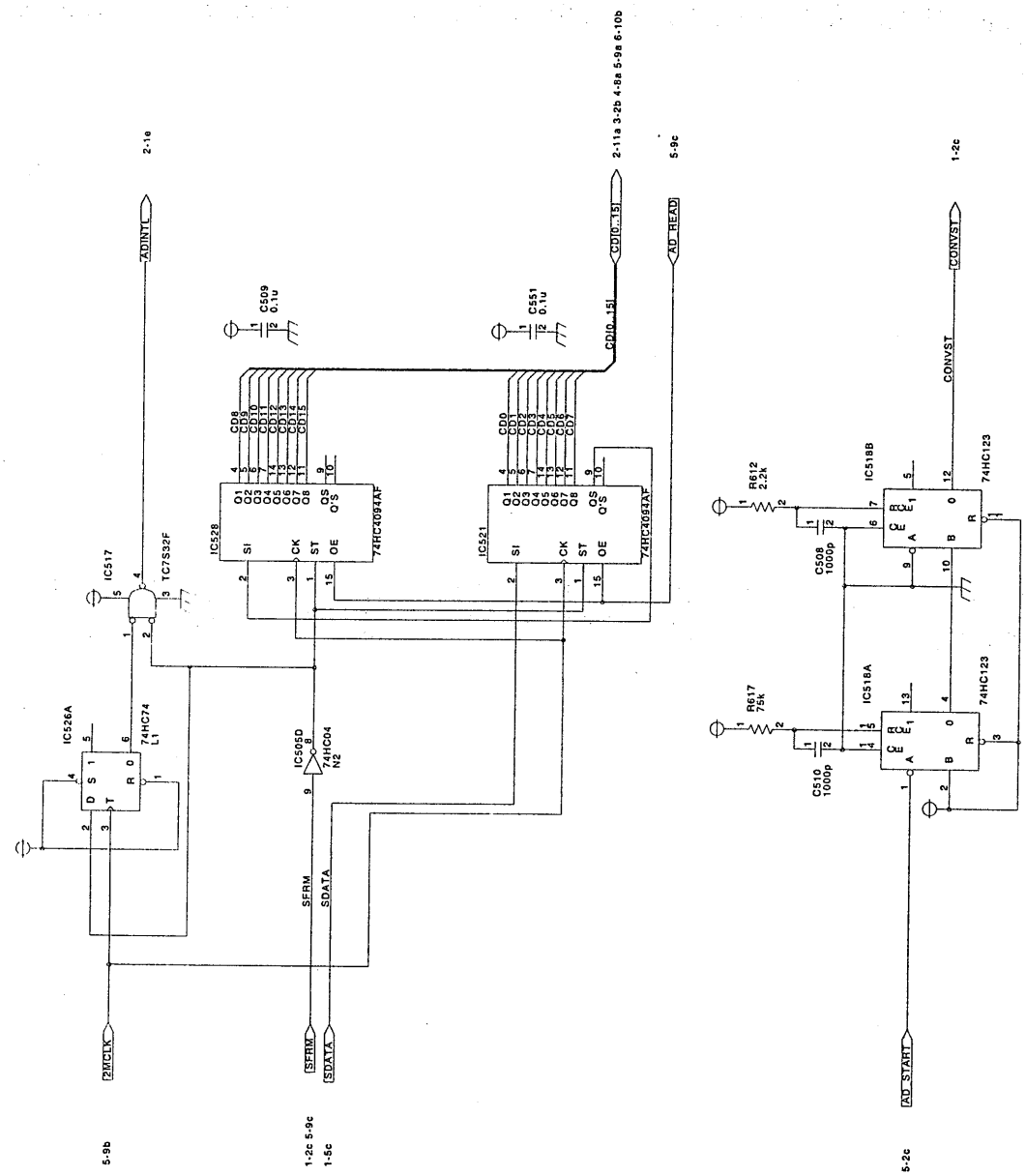

TITLE **HJCPU A/D CONTROL**	**7/10**	DRAWING NO.
MODEL NO. **HJ-500**	ASSEMBLY NO.	DATE

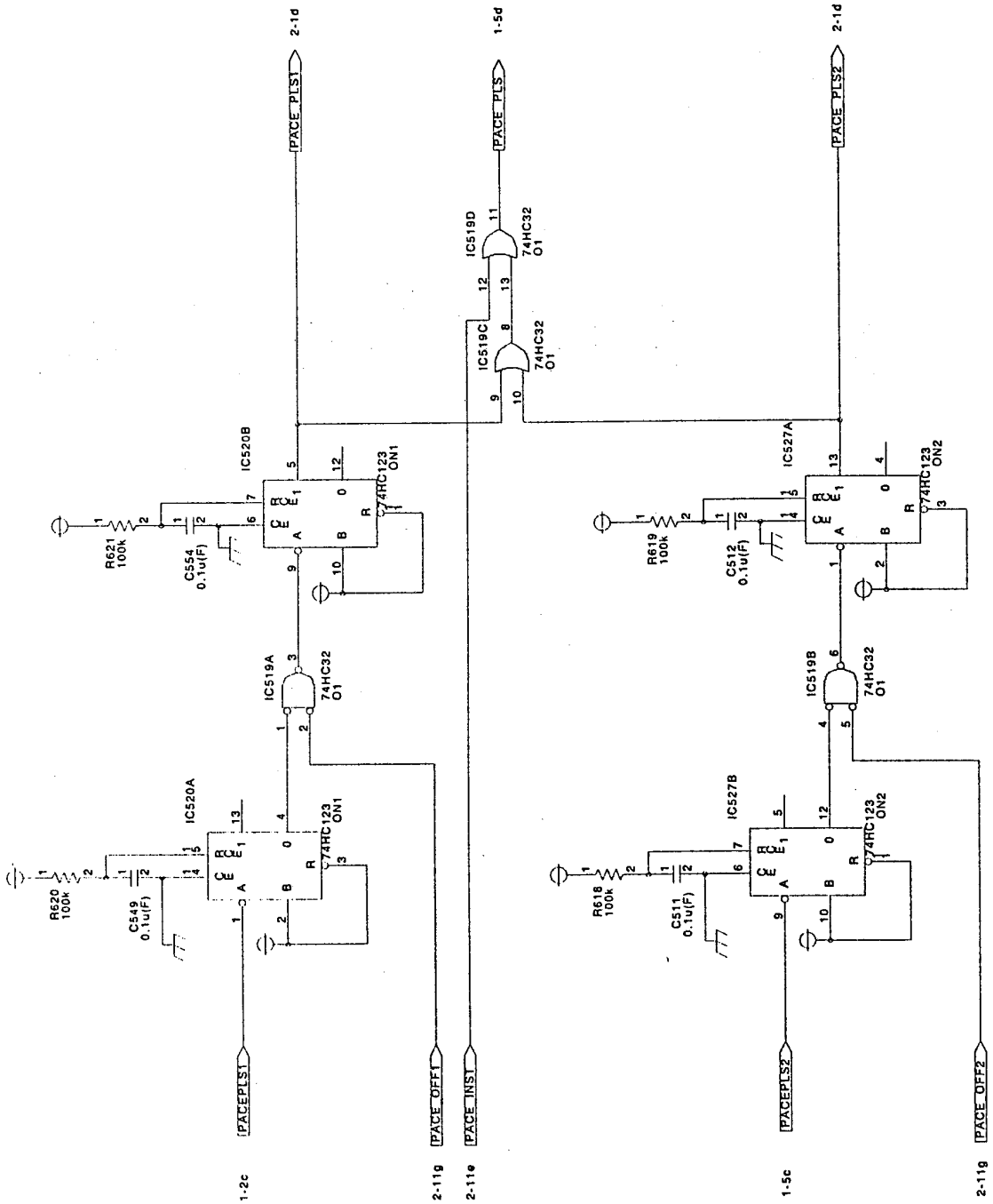

TITLE		DRAWING NO.
HJCPU PACE	8/10	
MODEL NO.	ASSEMBLY NO.	DATE
HJ-500		

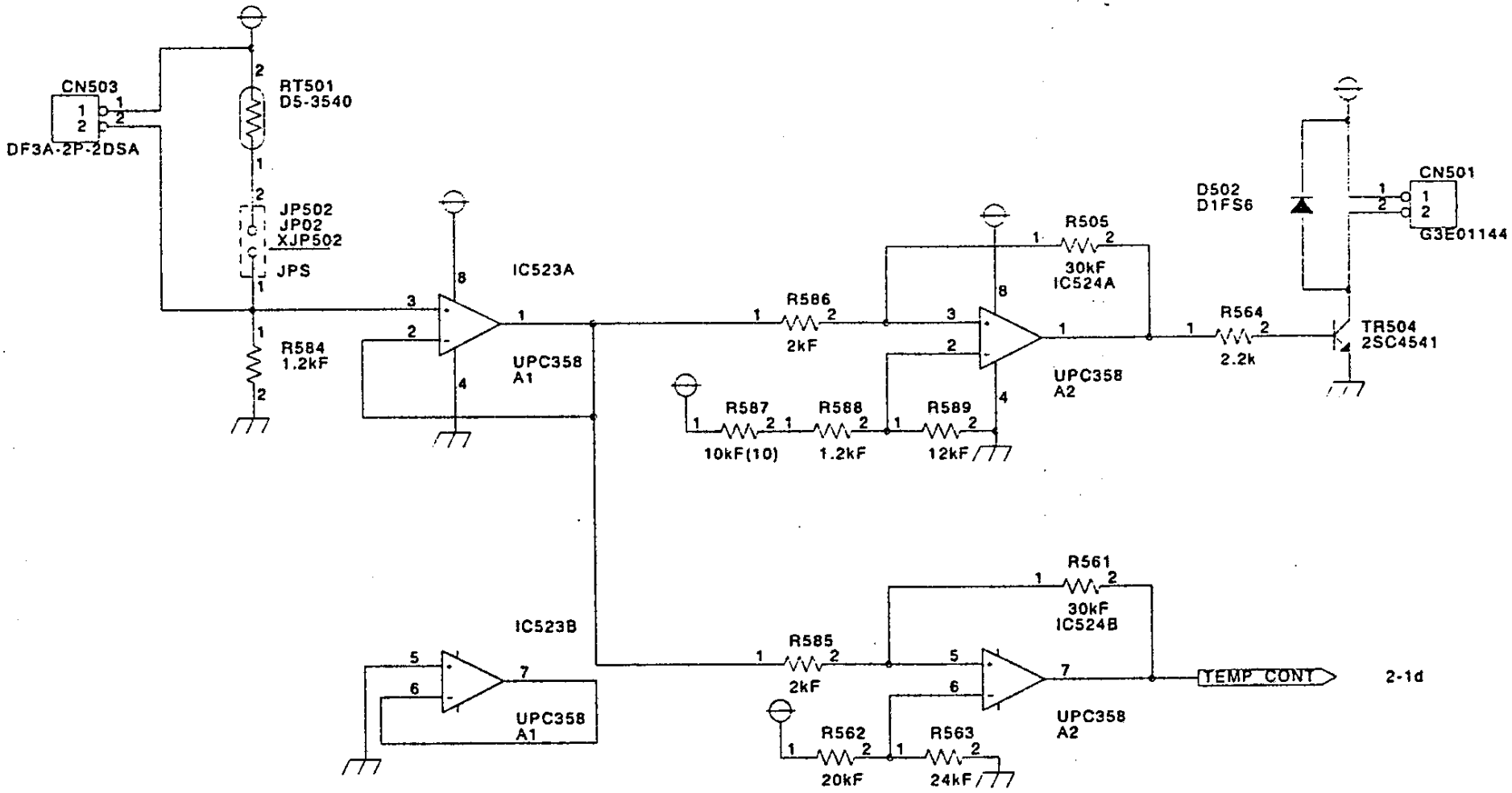

TITLE		DRAWING NO.
HJCPU TEMP CONTROL 9/10		
MODEL NO. HJ-500	ASSEMBLY NO.	DATE

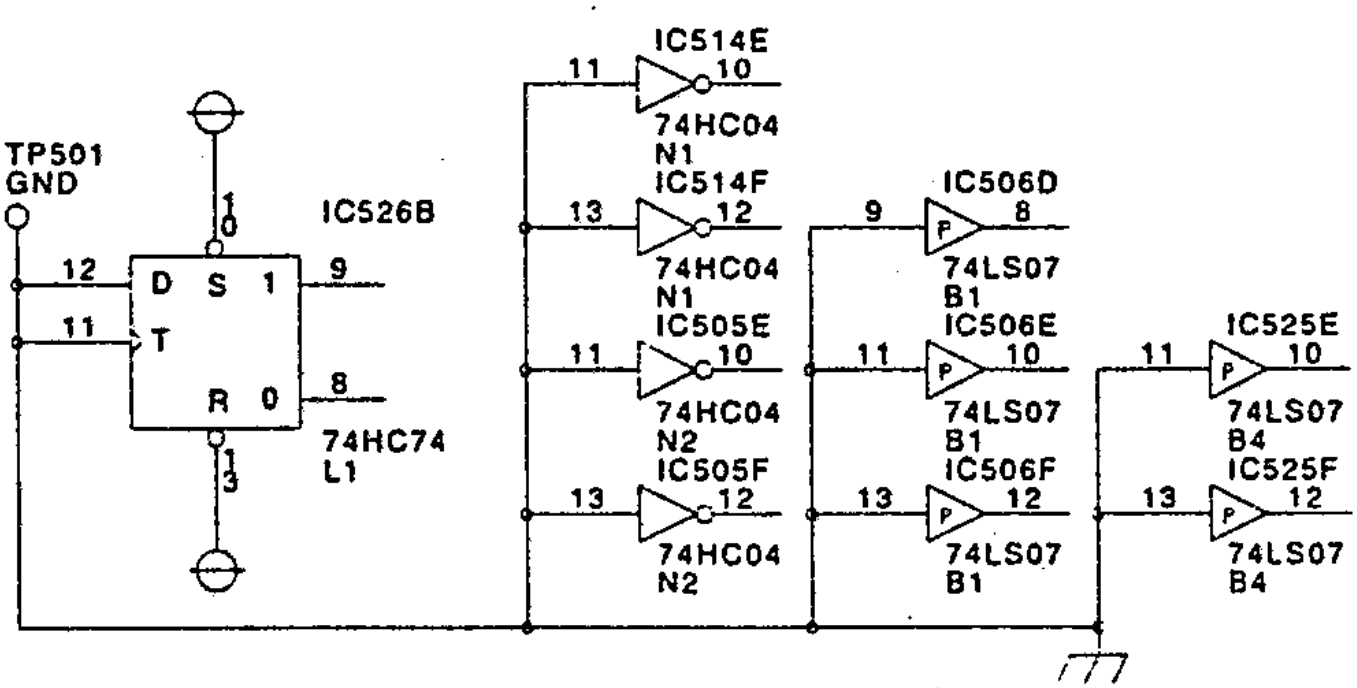

TITLE		DRAWING NO.
HJCPU OPEN 10/10		
MODEL NO. HJ-500	ASSEMBLY NO.	DATE

CONTENTS

HJPWR1
1. CONNECTER
HJPWR2
2. POWER1
HJPWR3
3. POWER2

TITLE		DRAWING NO.
HJPWR **0/3**		
MODEL NO. **HJ-500**	ASSEMBLY NO.	DATE

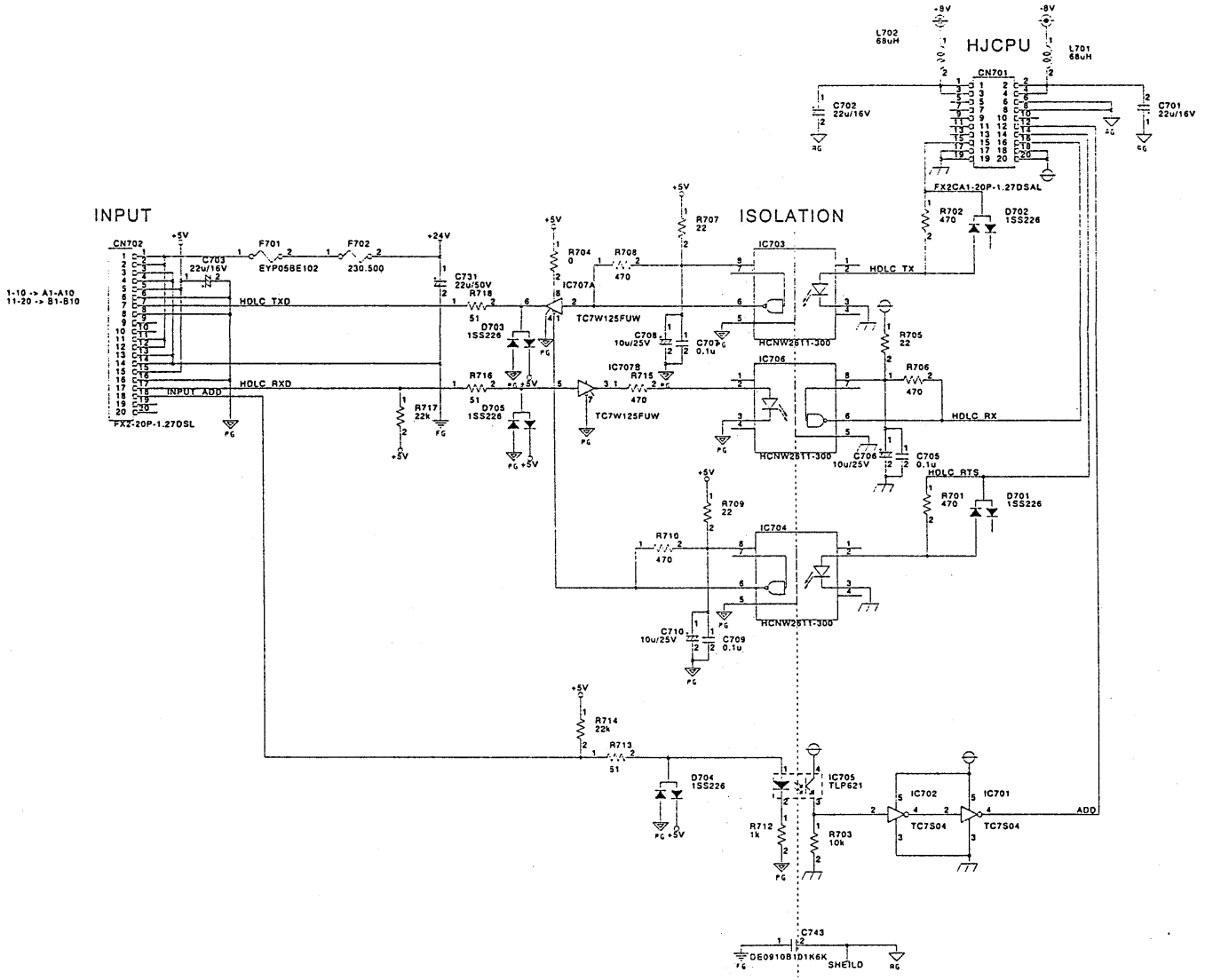

TITLE		DRAWING NO.
HJPWR CONNECTOR 1/3		
MODEL NO. **HJ-500**	ASSEMBLY NO.	DATE

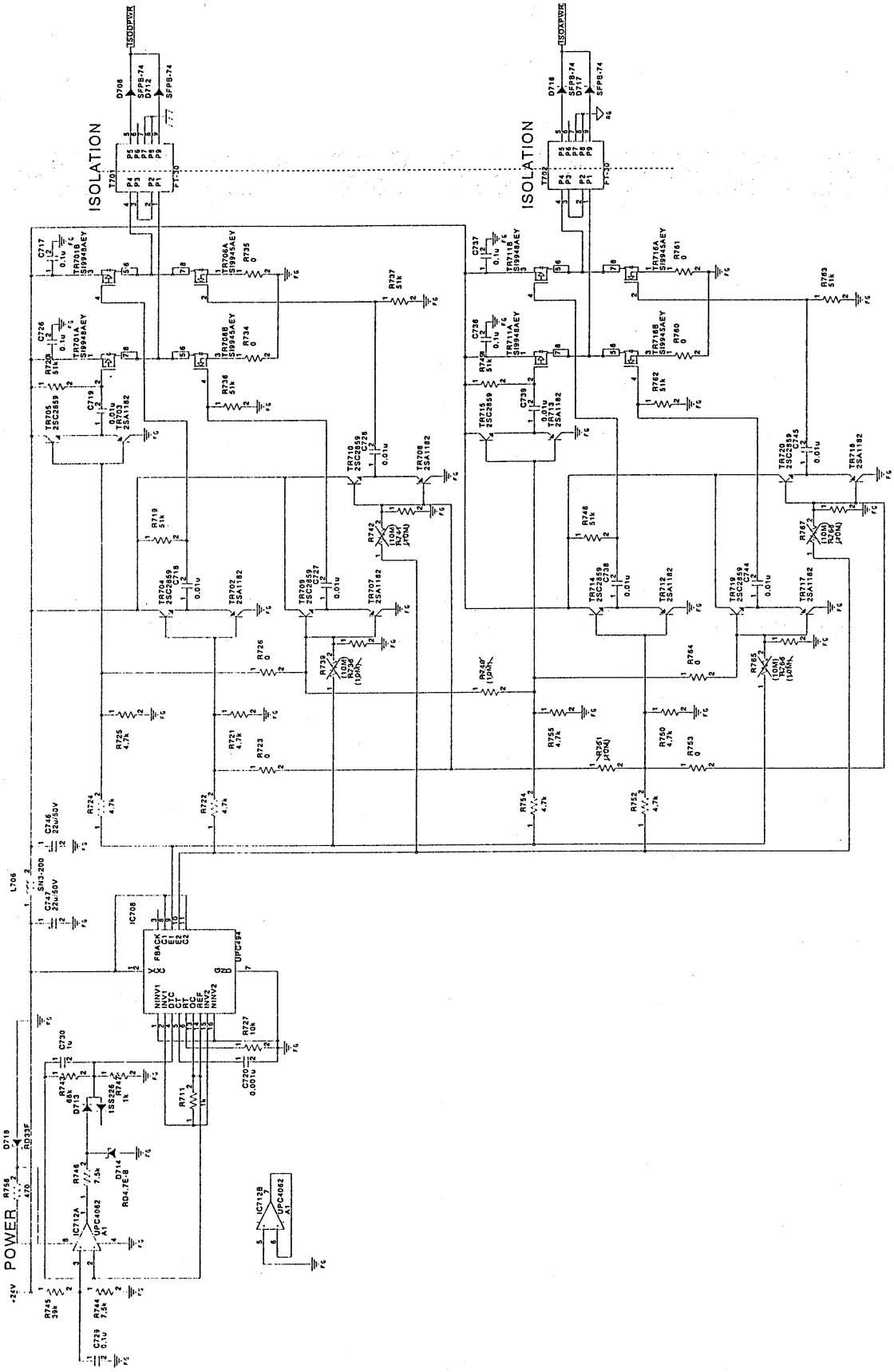

TITLE		DRAWING NO.
HJPWR POWER1	2/3	
MODEL NO.	ASSEMBLY NO.	DATE
HJ-500		

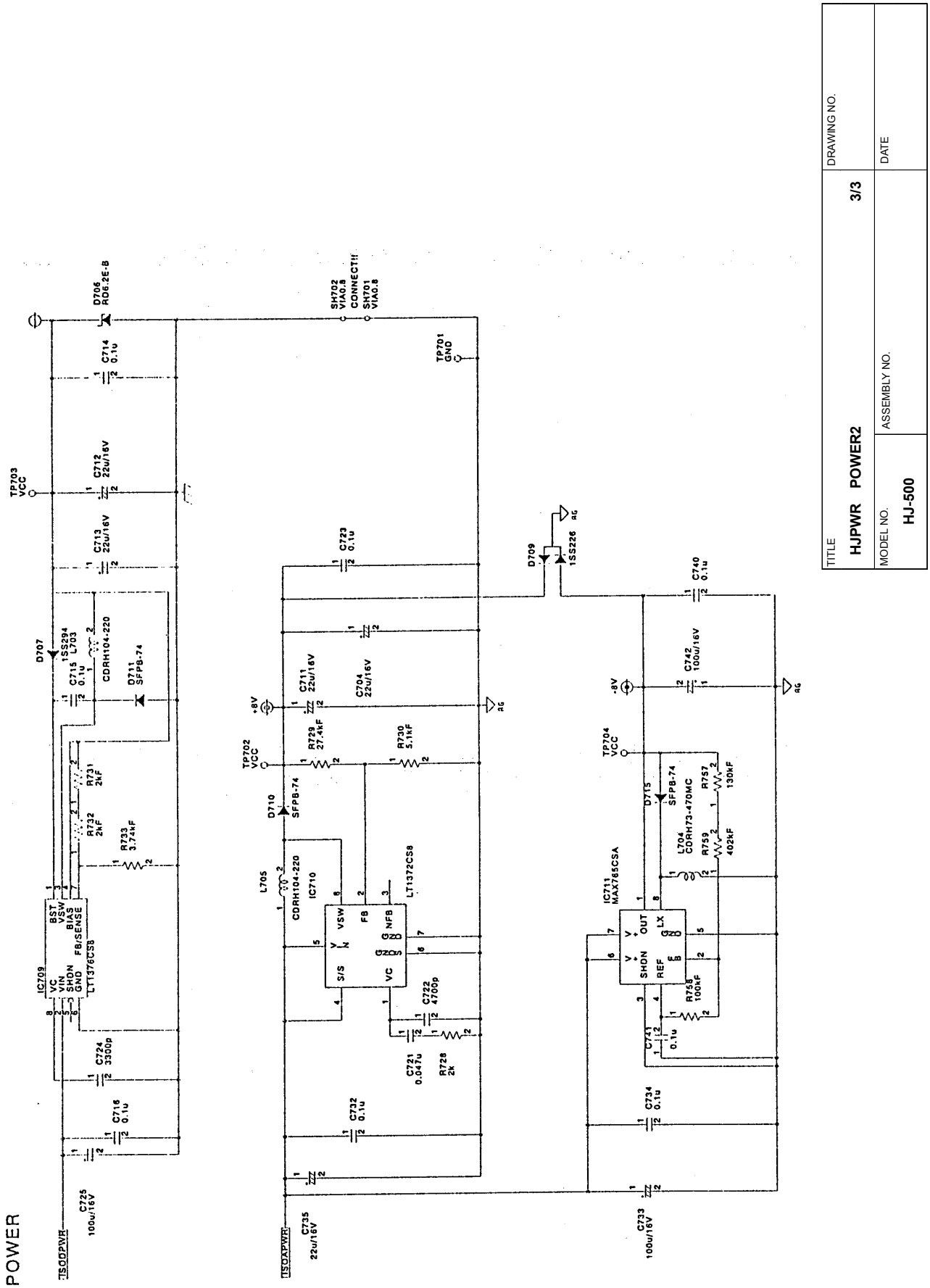
POWER
TITLE
HJPWR POWER2
3/3
DRAWING NO.
MODEL NO.
HJ-500
ASSEMBLY NO.
DATE
TP703 VCC
D706 RD6.2E-B
SH702 VIA0.8
CONNECT!!
SH701 VIA0.8
TP701 GND
C714 0.1u
C712 22u/16V
C713 22u/16V
D707 1SS294
C715 0.1u
L703 CDRH104-220
D711 SFPB-74
R731 2kF
R732 2kF
R733 3.74kF
IC709 LT1372CS8
BST
VSW
BIAS
FB/SENSE
VC
VIN
SHDN
GND
C724 3300p
C716 0.1u
C725 100u/16V
TSOOPWR
C723 0.1u
D709 1SS226
AG
C740 0.1u
C742 100u/16V
+8V
C711 22u/16V
C704 22u/16V
R728 27.4kF
R730 5.1kF
TP702 VCC
D710 SFPB-74
L705 CDRH104-220
IC710 LT1372CS8
VSW
FB
NFB
S/S
VC
GND
C722 4700p
C721 0.047u
R728 2k
C732 0.1u
C735 22u/16V
TSOAPWR
-8V
TP704 VCC
D715 SFPB-74
L704 CDRH73-470MC
R757 130kF
R759 402kF
IC711 MAX765CSA
OUT
LX
SHDN
REF
R758 100kF
C741 0.1u
C734 0.1u
C733 100u/16V

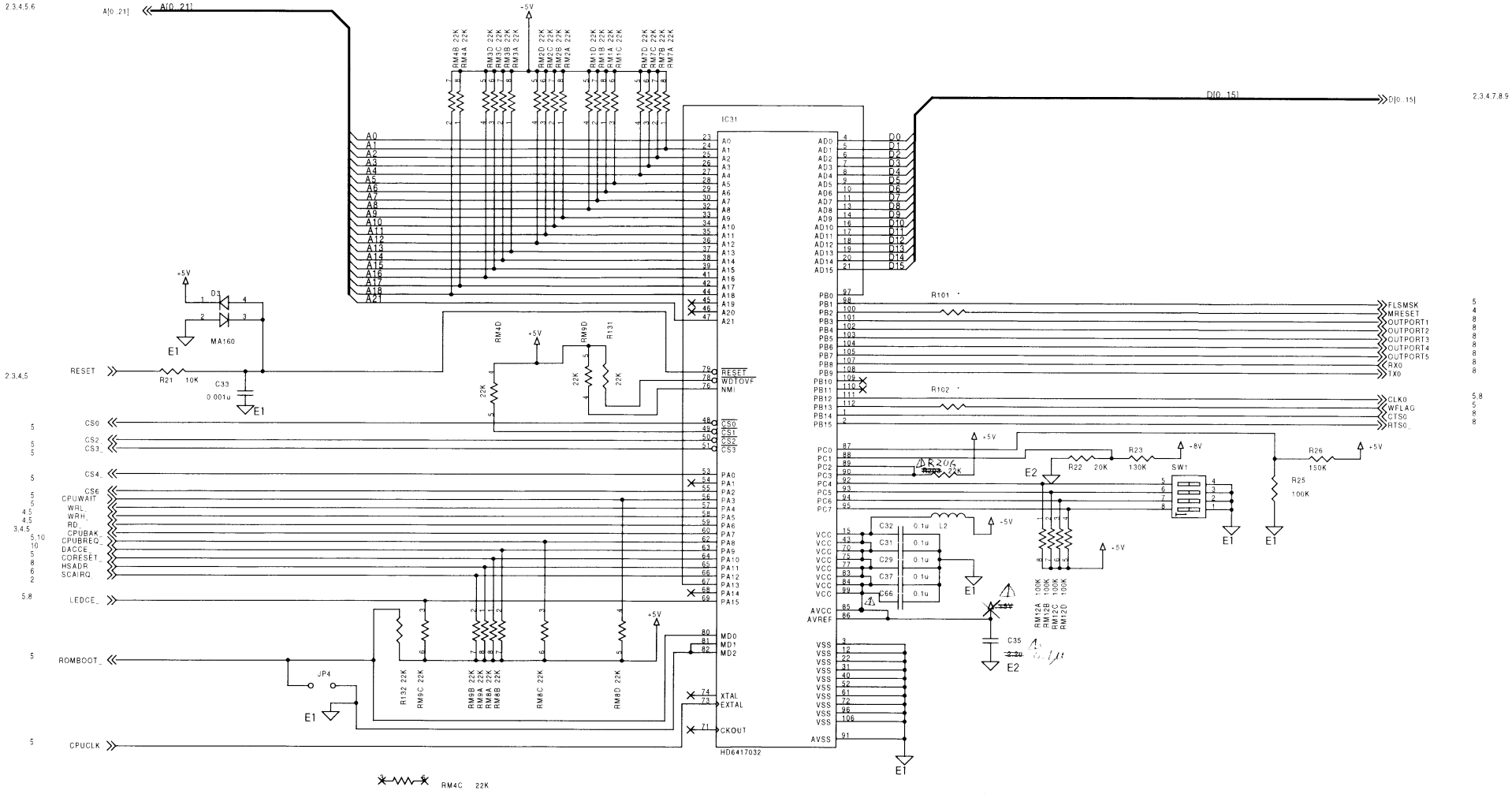

TITLE		DRAWING NO.
I/F BOARD CPU 1/11		523-2184
MODEL NO. HC-530	ASSEMBLY NO. PCB-6597A	DATE

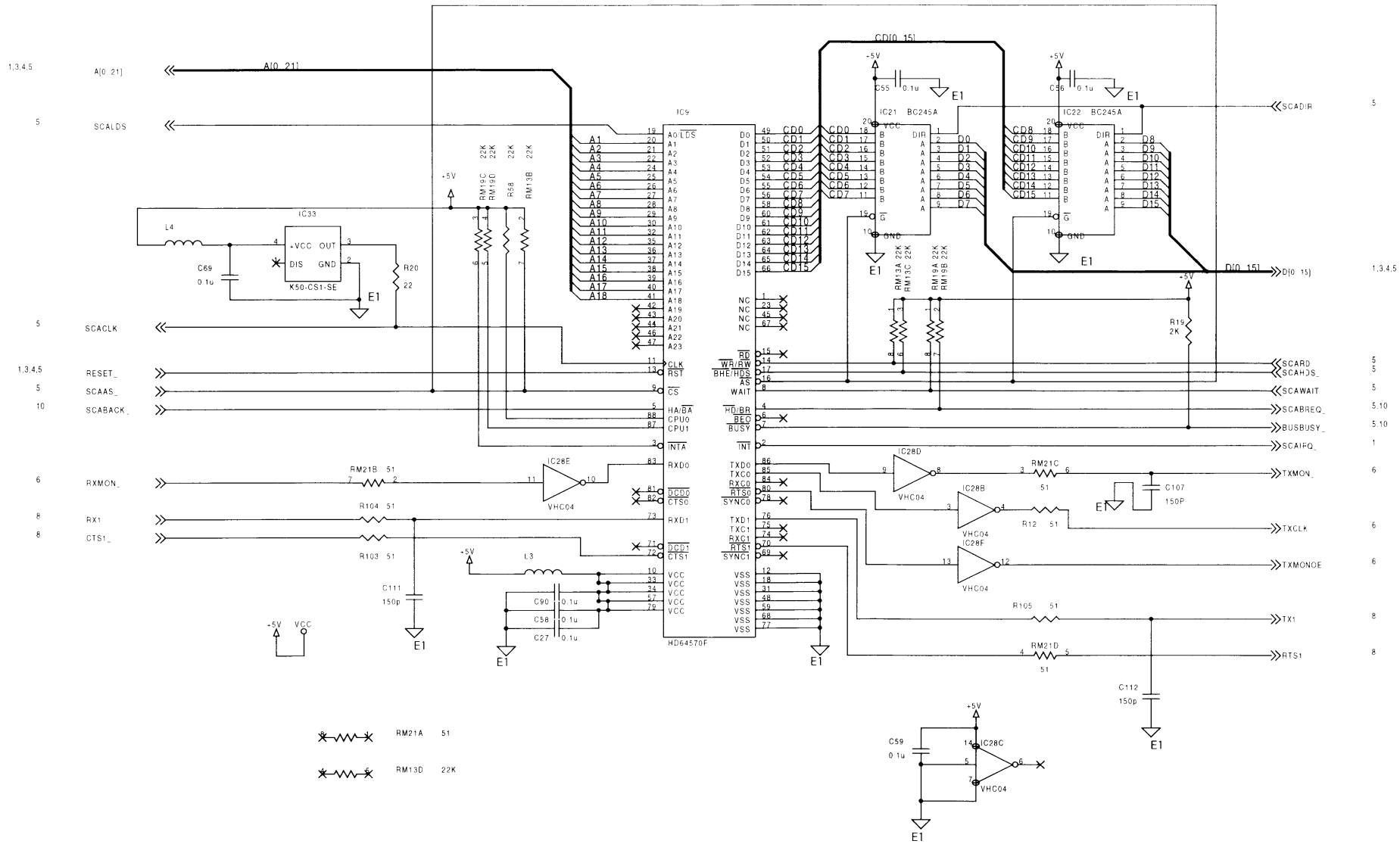

TITLE		DRAWING NO.
I/F BOARD SCA 2/11		**523-2184**
MODEL NO. **HC-530**	ASSEMBLY NO. **PCB-6597A**	DATE

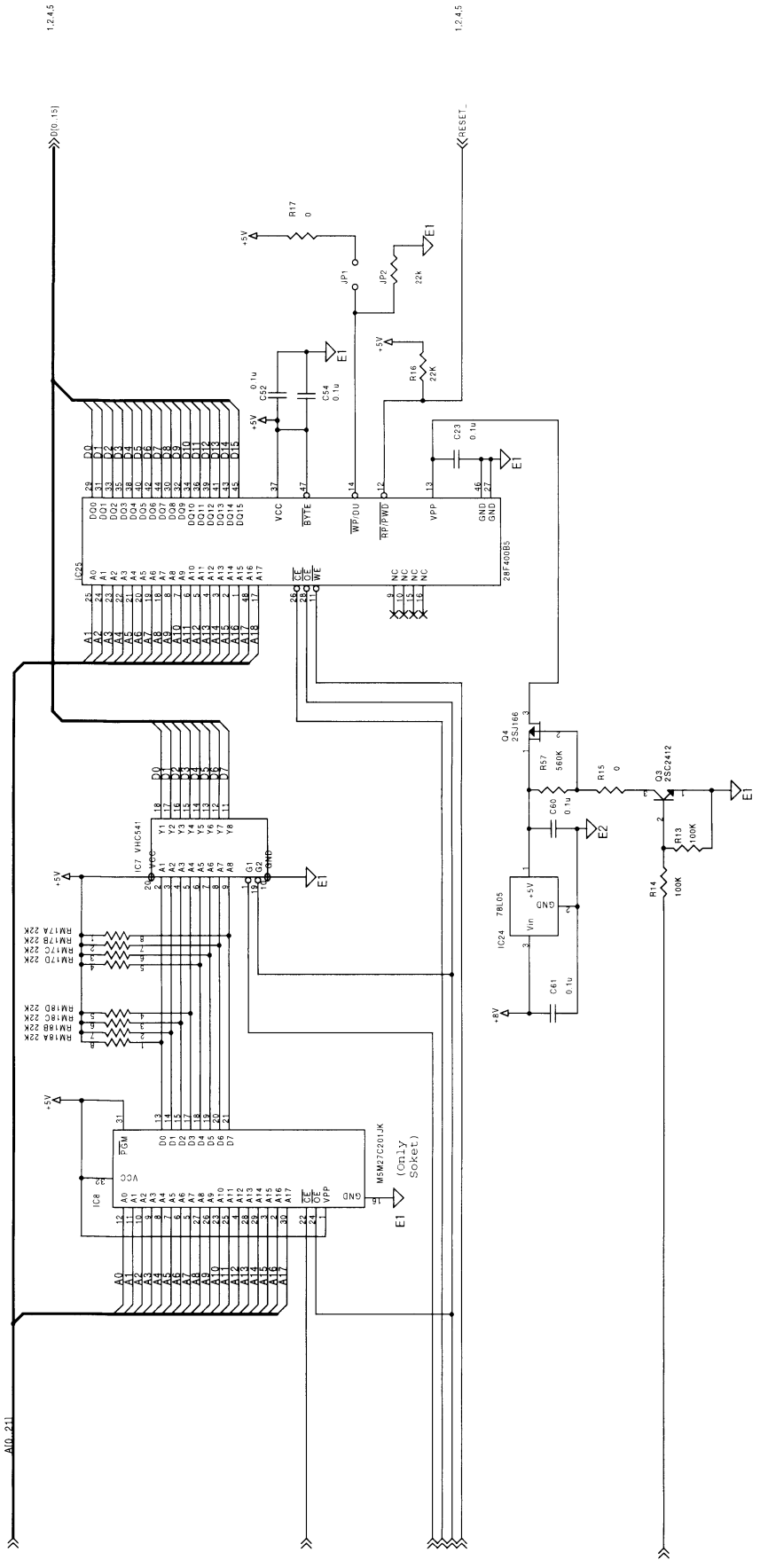

TITLE	I/F BOARD ROM/FROM	3/11	DRAWING NO. 523-2184
MODEL NO.	HC-530	ASSEMBLY NO. PCB-6597A	DATE

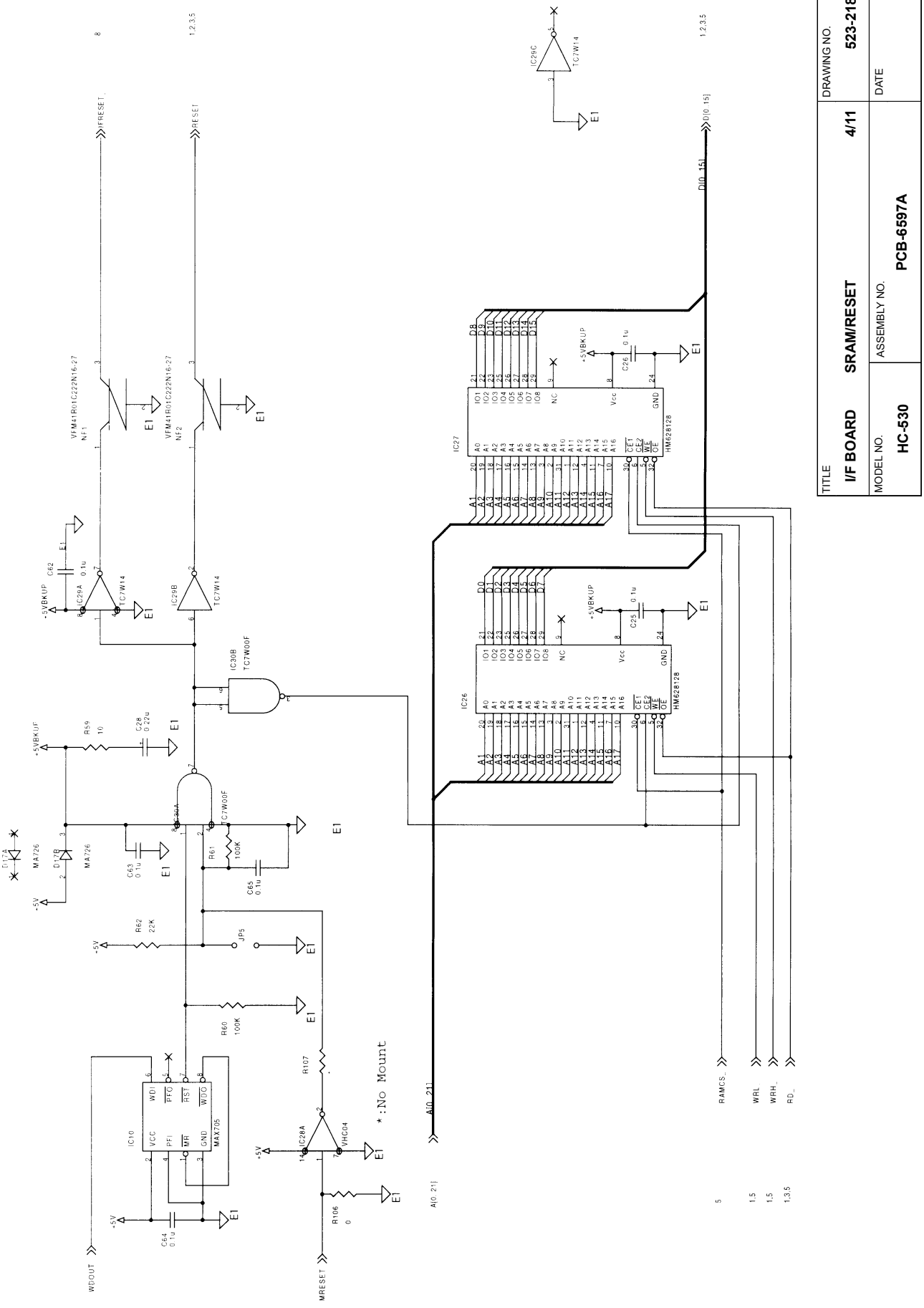
TITLE
I/F BOARD SRAM/RESET 4/11
DRAWING NO.
523-2184
MODEL NO.
HC-530
ASSEMBLY NO.
PCB-6597A
DATE
*:No Mount

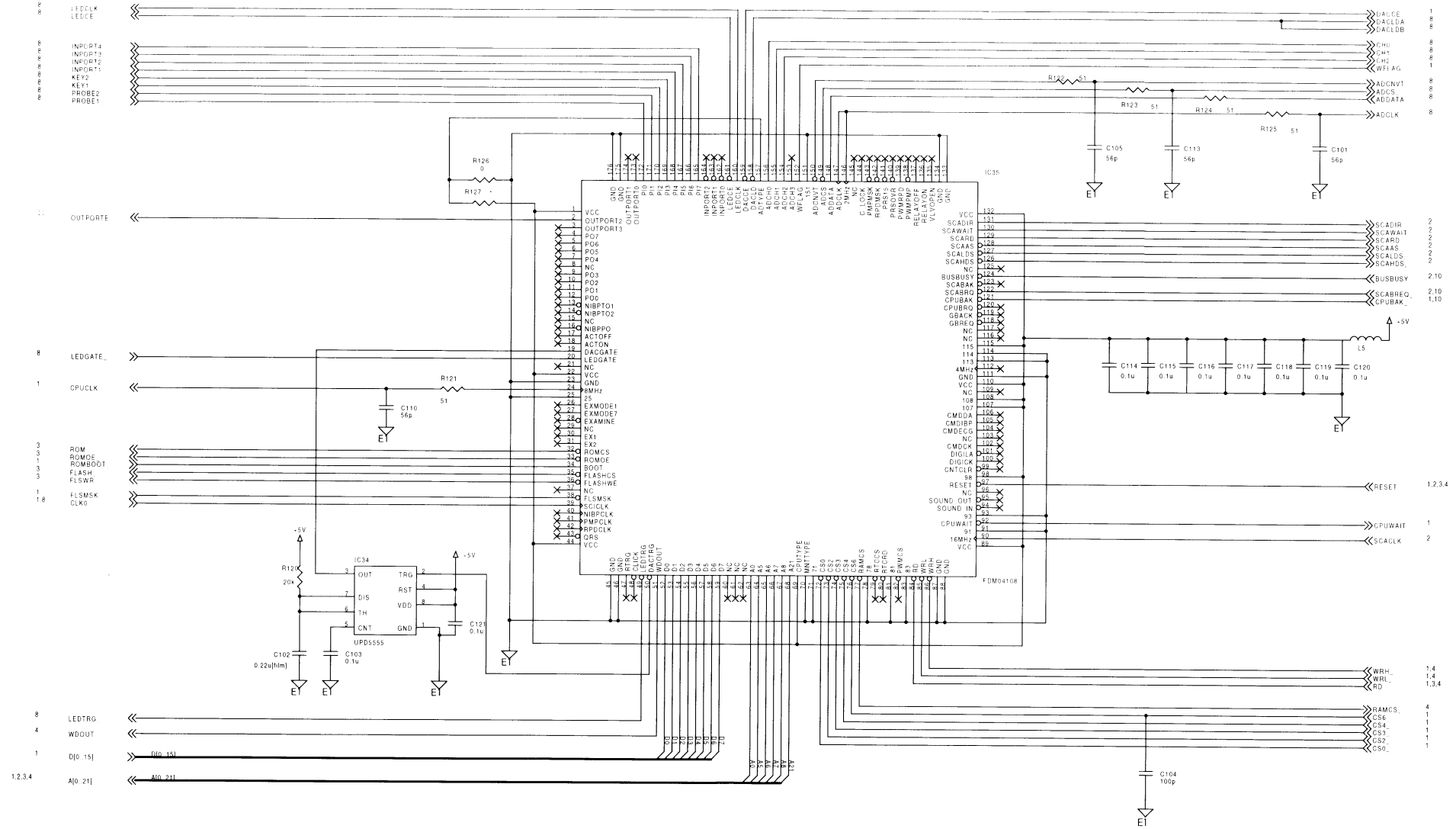

TITLE			DRAWING NO.
I/F BOARD	GATE ARRAY	5/11	523-2184
MODEL NO.	ASSEMBLY NO.		DATE
HC-530	PCB-6597A		

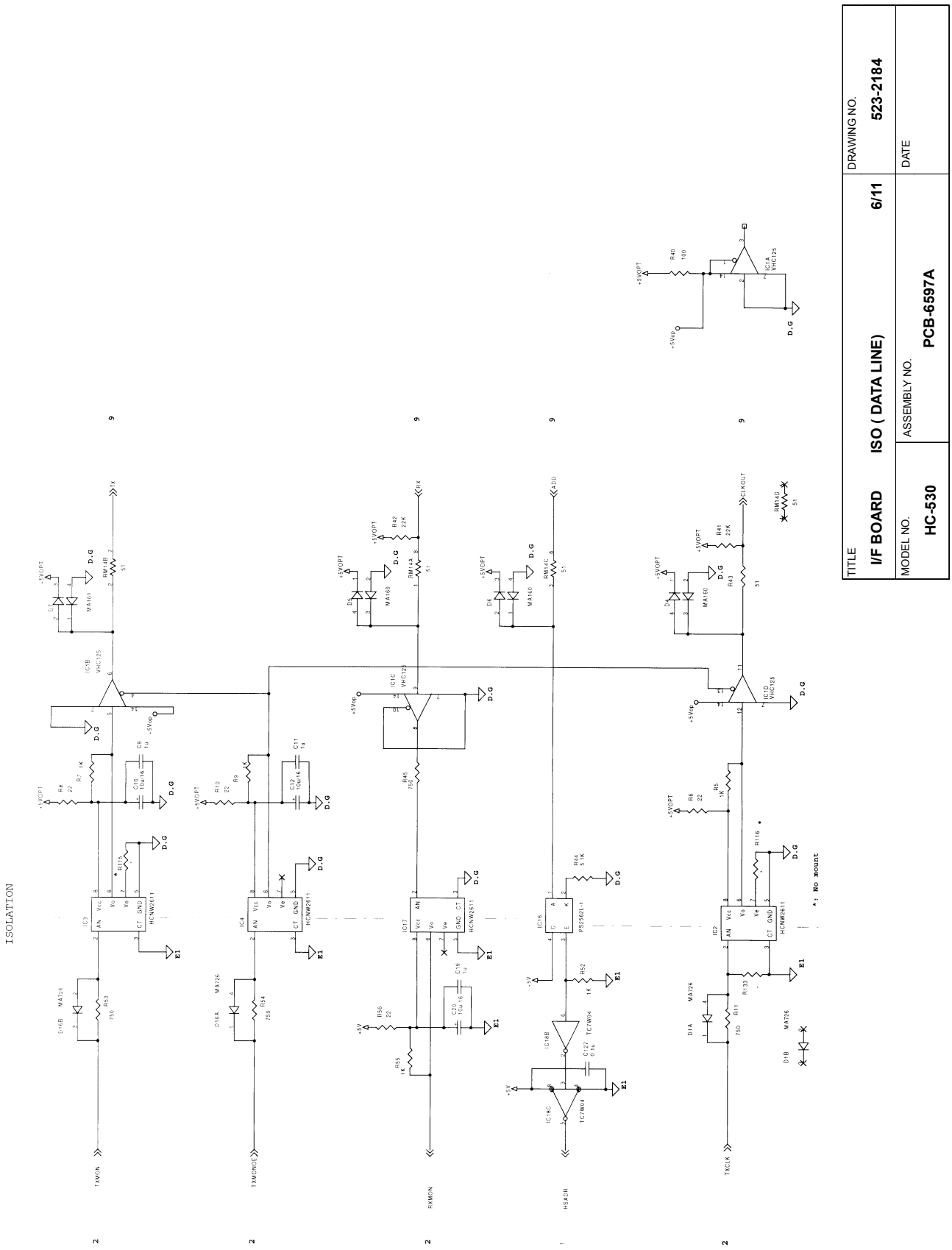

TITLE			DRAWING NO.
I/F BOARD	ISO (DATA LINE)	6/11	523-2184
MODEL NO.	ASSEMBLY NO.		DATE
HC-530	PCB-6597A		

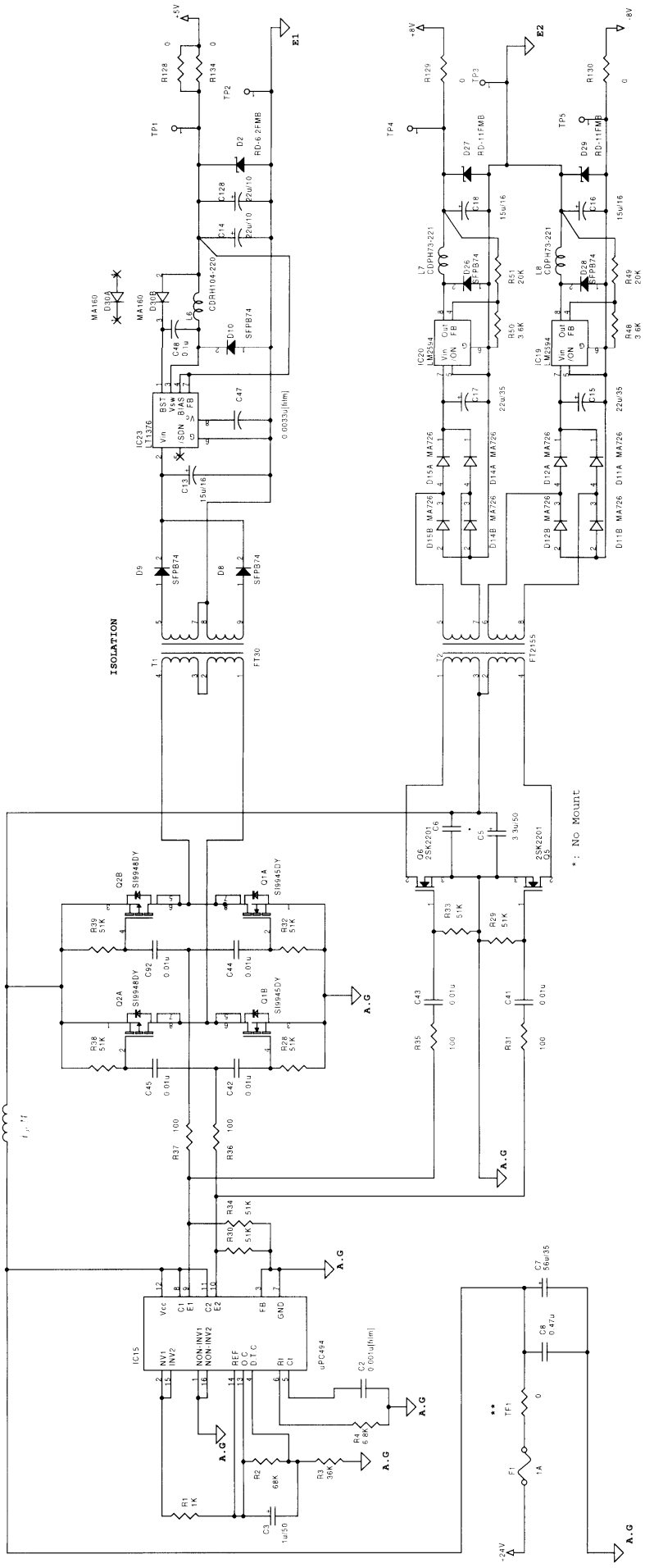

TITLE			DRAWING NO.
I/F BOARD	**POWER**	**7/11**	**523-2184**
MODEL NO.	ASSEMBLY NO.		DATE
HC-530	**PCB-6597A**		

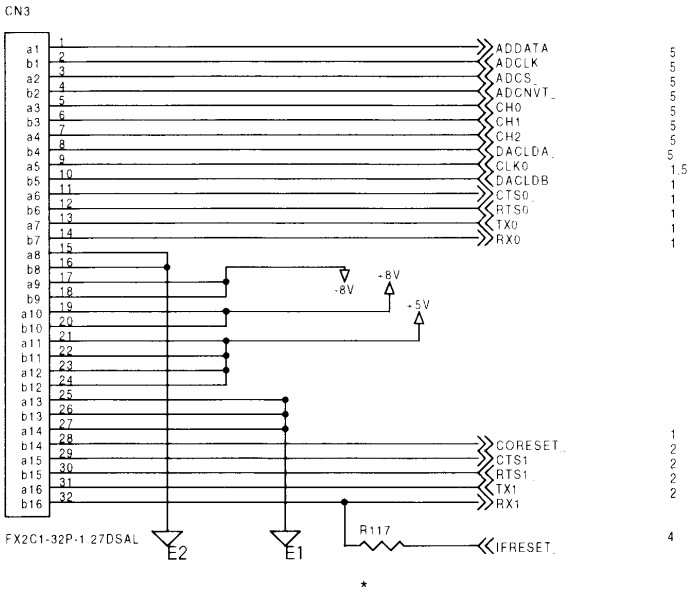

*: No Mount

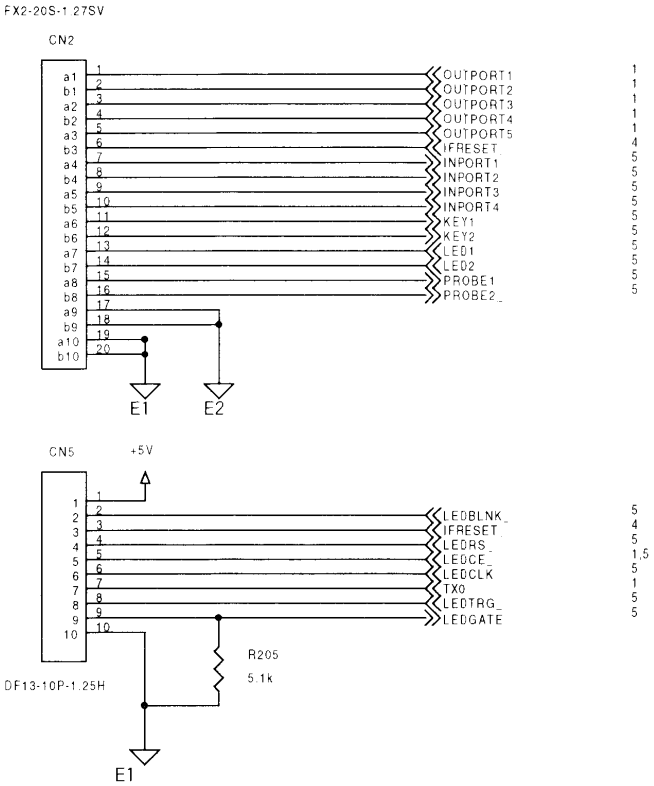

TITLE			DRAWING NO.
I/F BOARD	INTERFACE (ANALOG)	8/11	523-2184
MODEL NO.	ASSEMBLY NO.		DATE
HC-530	PCB-6597A		

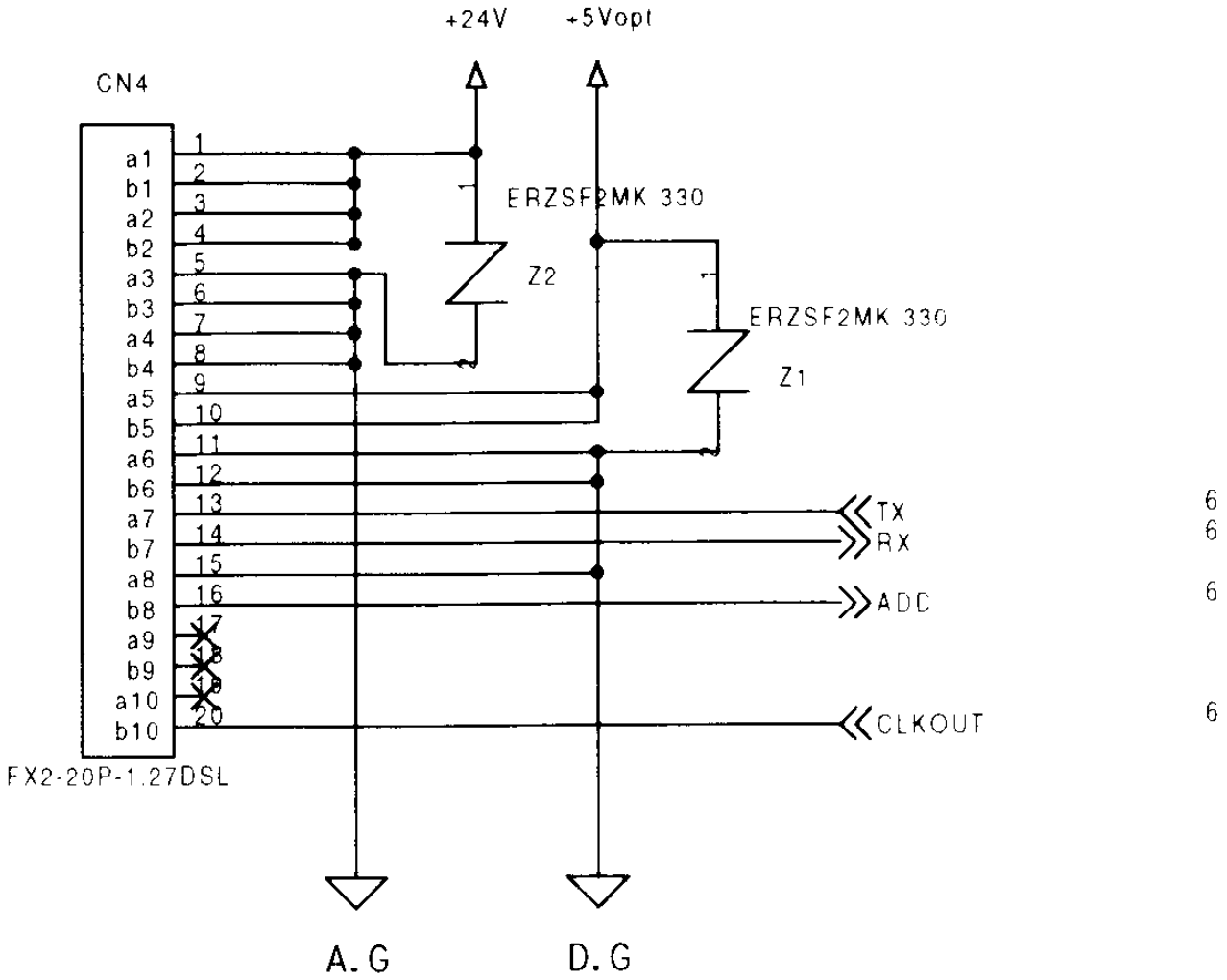

TITLE			DRAWING NO.
I/F BOARD	INTERFACE (IB)	9/11	523-2184
MODEL NO.	ASSEMBLY NO.		DATE
HC-530	PCB-6597A		

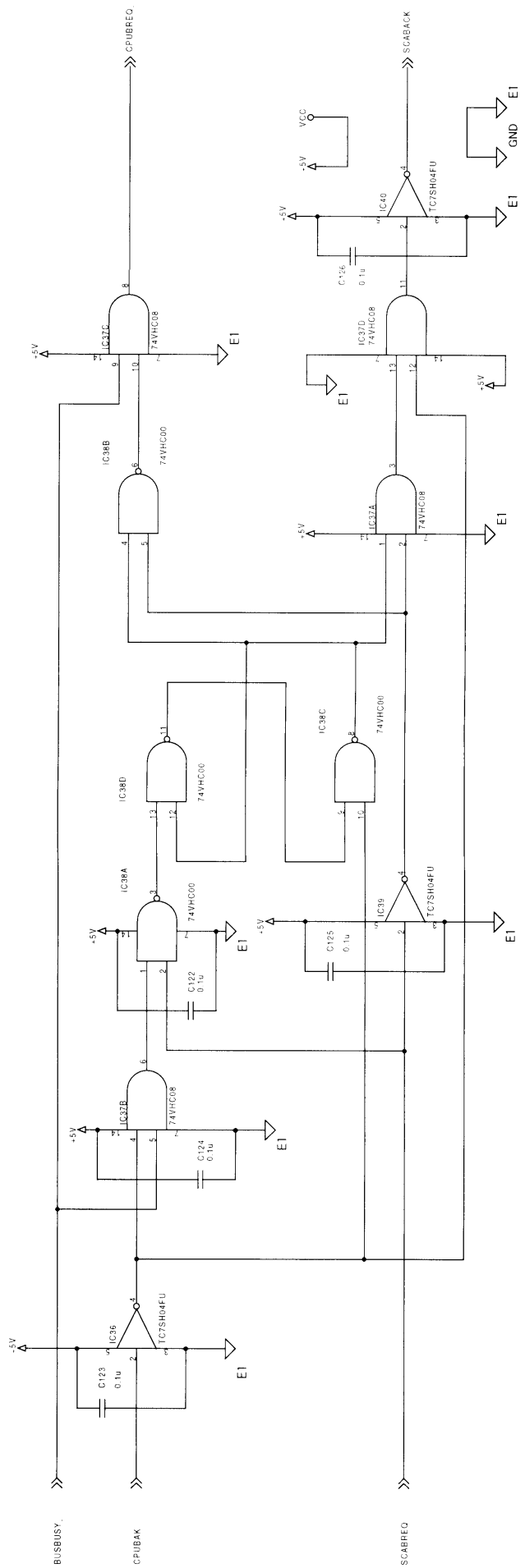

TITLE			DRAWING NO.
I/F BOARD	**BUS ARBITOR**	**10/11**	**523-2184**
MODEL NO.	ASSEMBLY NO.		DATE
HC-530	**PCB-6597A**		

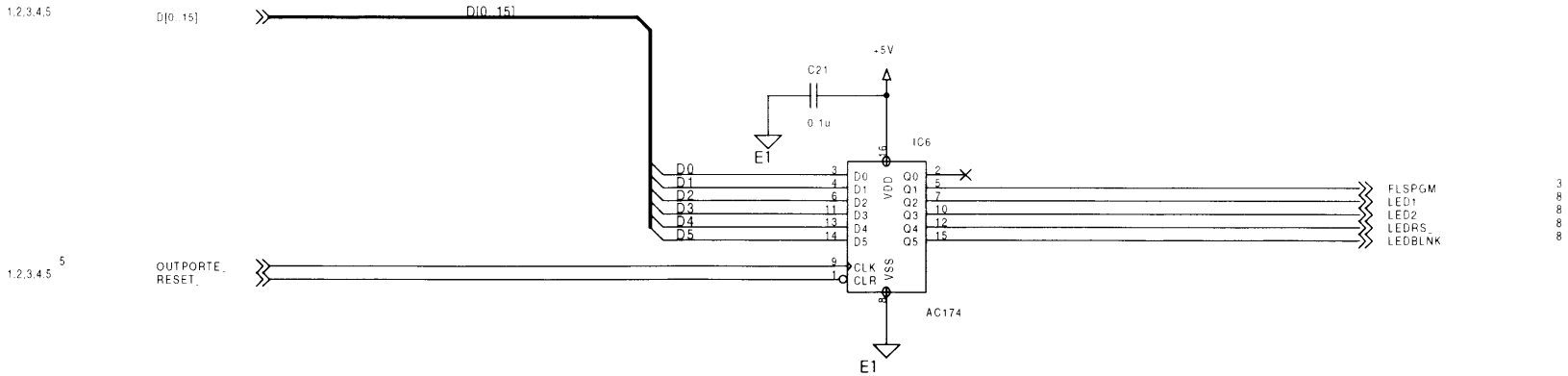

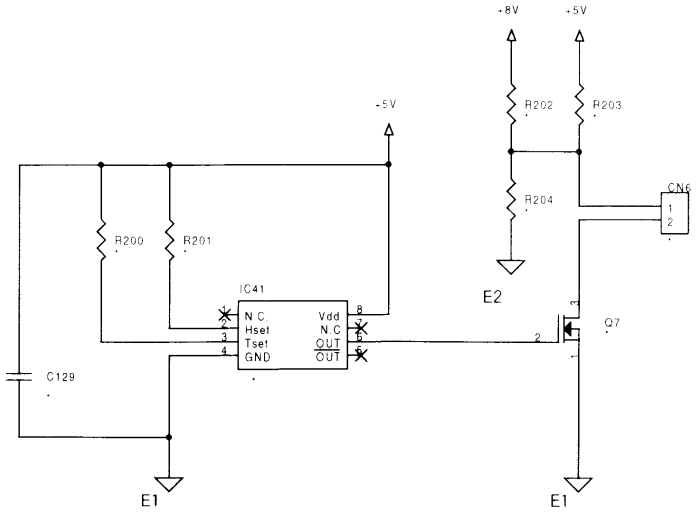

*:NO MOUNT

TITLE			DRAWING NO.
I/F BOARD	OUT PORT	11/11	523-2184
MODEL NO.	ASSEMBLY NO.		DATE
HC-530	PCB-6597A		

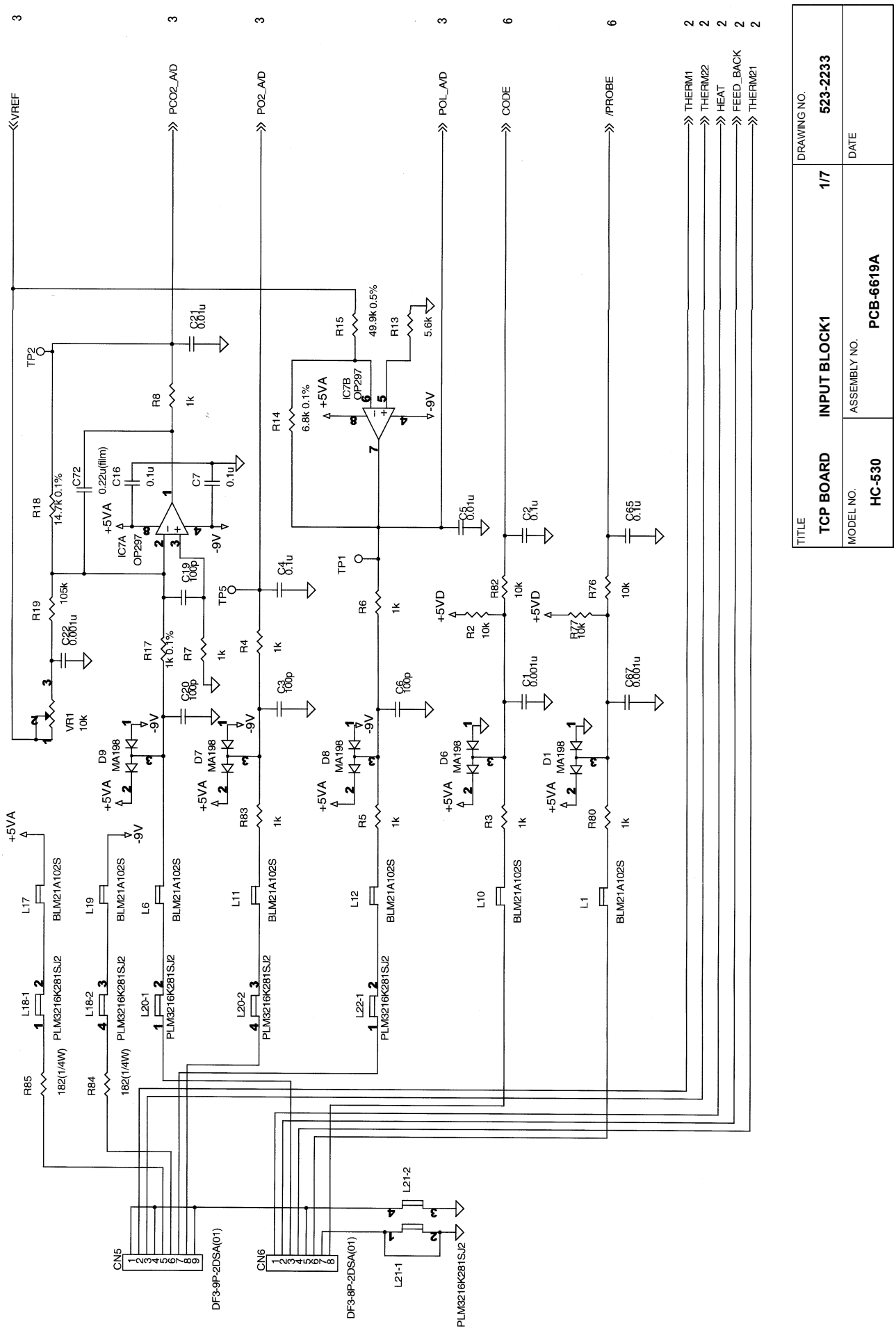

TITLE			DRAWING NO.
TCP BOARD	INPUT BLOCK1	1/7	523-2233
MODEL NO.	ASSEMBLY NO.		DATE
HC-530	PCB-6619A		

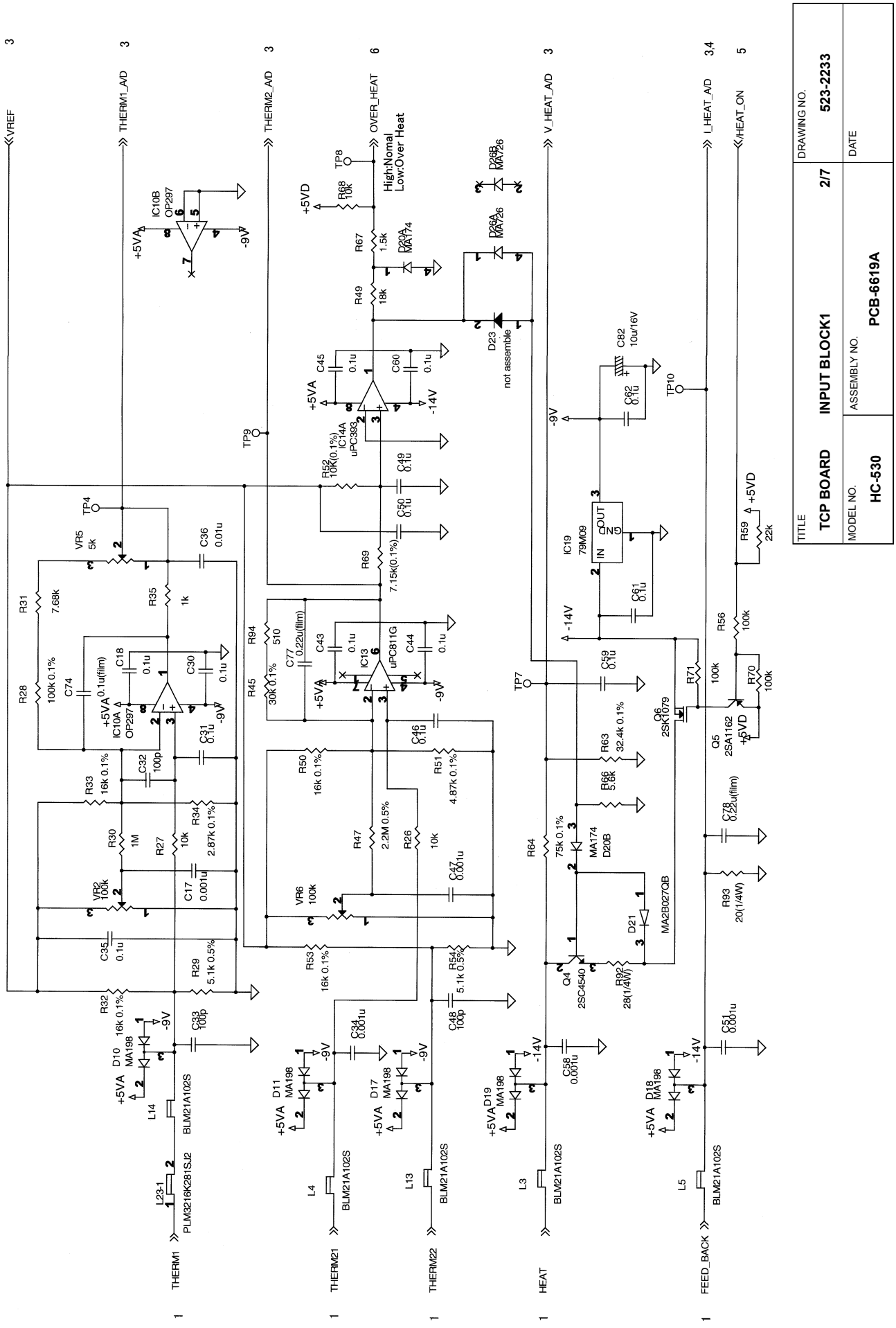
TITLE
TCP BOARD
INPUT BLOCK1
2/7
DRAWING NO.
523-2233
MODEL NO.
HC-530
ASSEMBLY NO.
PCB-6619A
DATE
VREF
THERM1_A/D
THERM2_A/D
OVER_HEAT
V_HEAT_A/D
I_HEAT_A/D
/HEAT_ON
High:Nomal
Low:Over Heat
not assemble
THERM1
THERM21
THERM22
HEAT
FEED_BACK

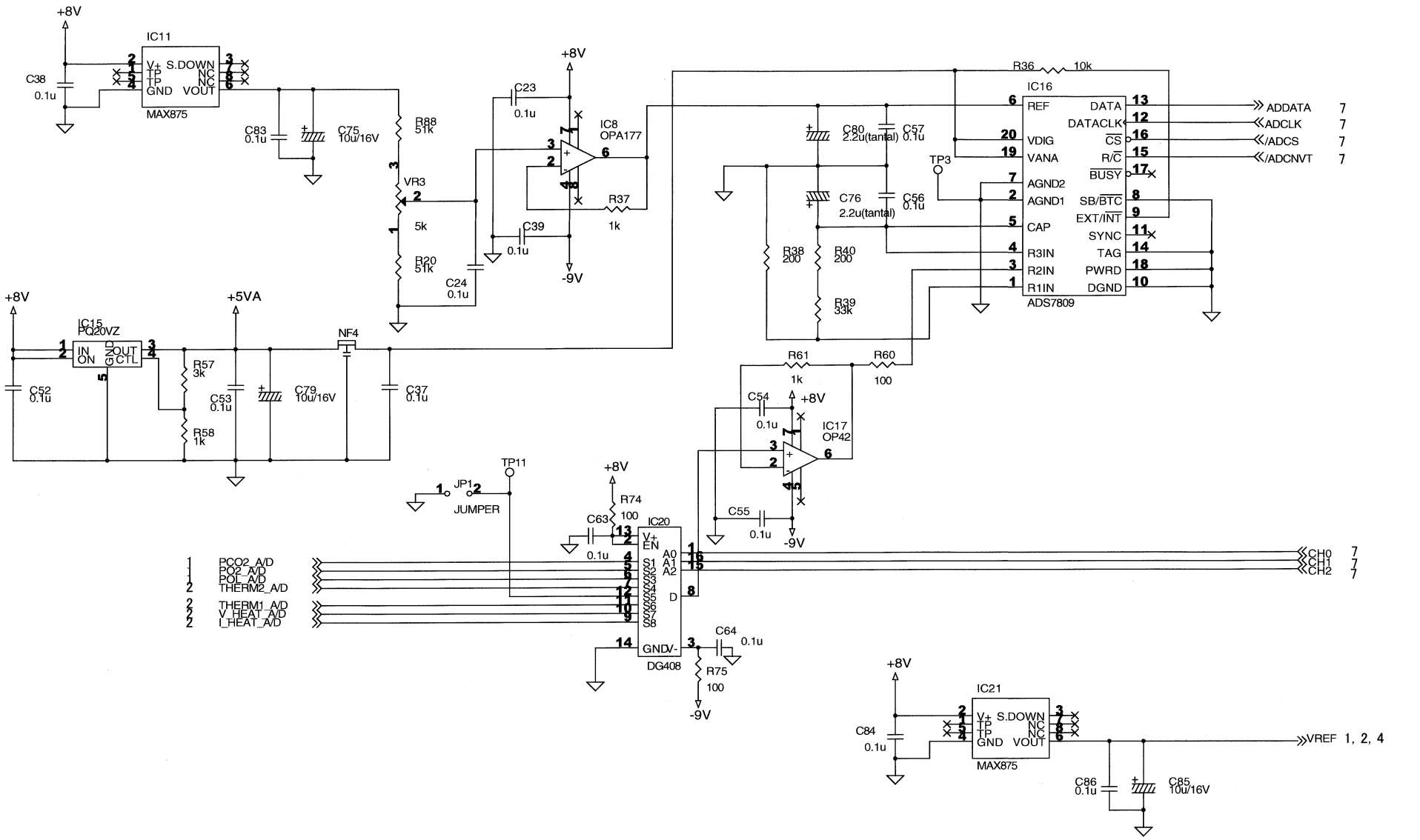

TITLE			DRAWING NO.
TCP BOARD	A/D BLOCK	3/7	523-2233
MODEL NO.	ASSEMBLY NO.		DATE
HC-530	PCB-6619A		

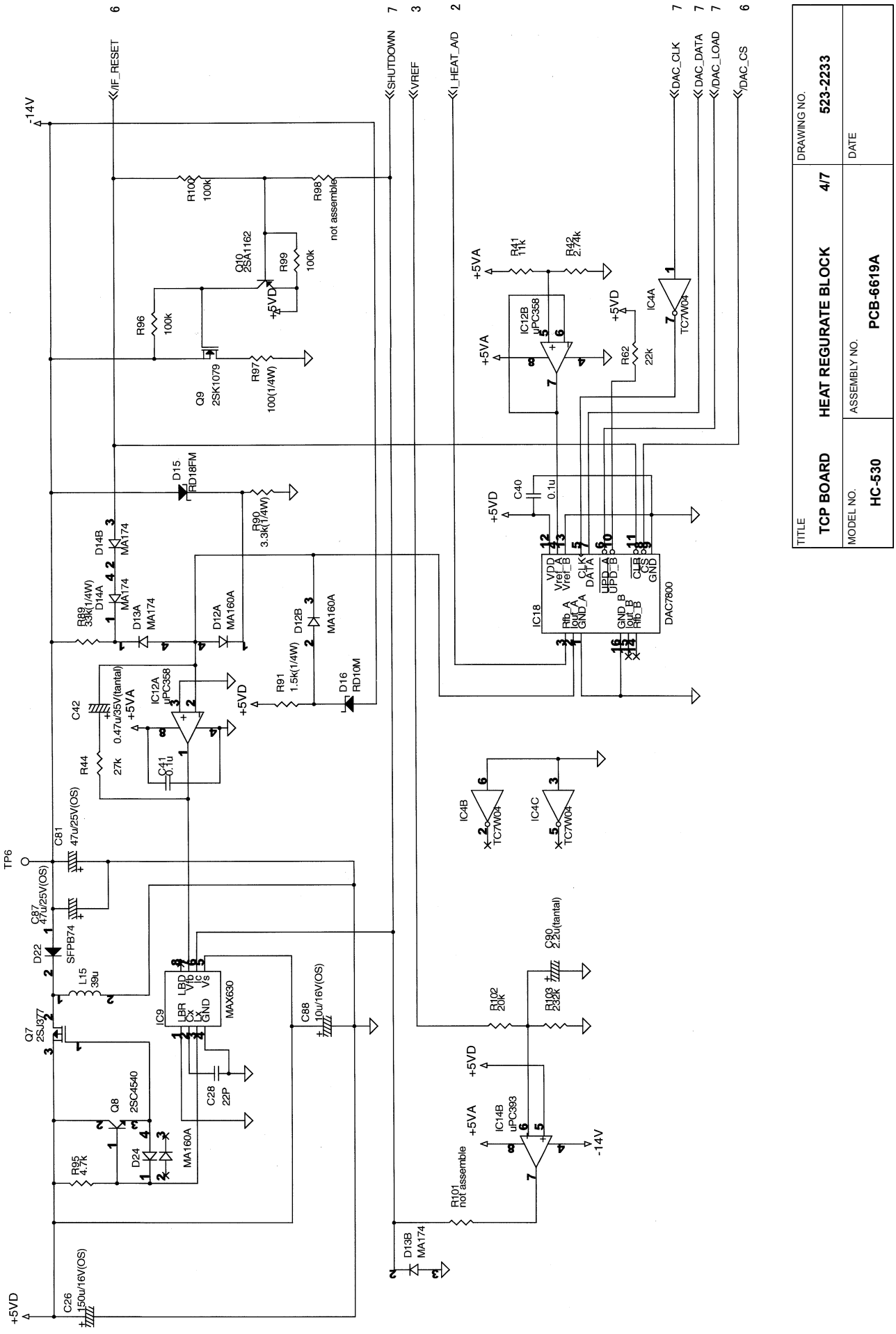
TITLE
TCP BOARD
HEAT REGURATE BLOCK
4/7
DRAWING NO.
523-2233
MODEL NO.
HC-530
ASSEMBLY NO.
PCB-6619A
DATE
-14V
+5VD
+5VA
/IF_RESET
/SHUTDOWN
VREF
I_HEAT_A/D
/DAC_CLK
/DAC_DATA
/DAC_LOAD
/DAC_CS
TP6
C81 47u/25V(OS)
C87 47u/25V(OS)
D22 SFPB74
L15 39u
Q7 2SJ377
Q8 2SC4540
D24 MA160A
R95 4.7k
IC9 MAX630
C28 22P
C88 10u/16V(OS)
C26 150u/16V(OS)
C42 0.47u/35V(tantal)
R44 27k
C41 0.1u
IC12A uPC358
R89 33k(1/4W)
D14A MA174
D13A MA174
D12A MA160A
D14B MA174
D15 RD18FM
R90 3.3k(1/4W)
R91 1.5k(1/4W)
D12B MA160A
D16 RD10M
R96 100k
R97 100(1/4W)
Q9 2SK1079
R99 100k
Q10 2SA1162
R100 100k
R98 not assemble
IC18 DAC7800
C40 0.1u
R41 11k
R42 2.74k
IC12B uPC358
R62 22k
IC4A TC7W04
IC4B TC7W04
IC4C TC7W04
C90 2.2u(tantal)
R102 20k
R103 232k
IC14B uPC393
R101 not assemble
D13B MA174

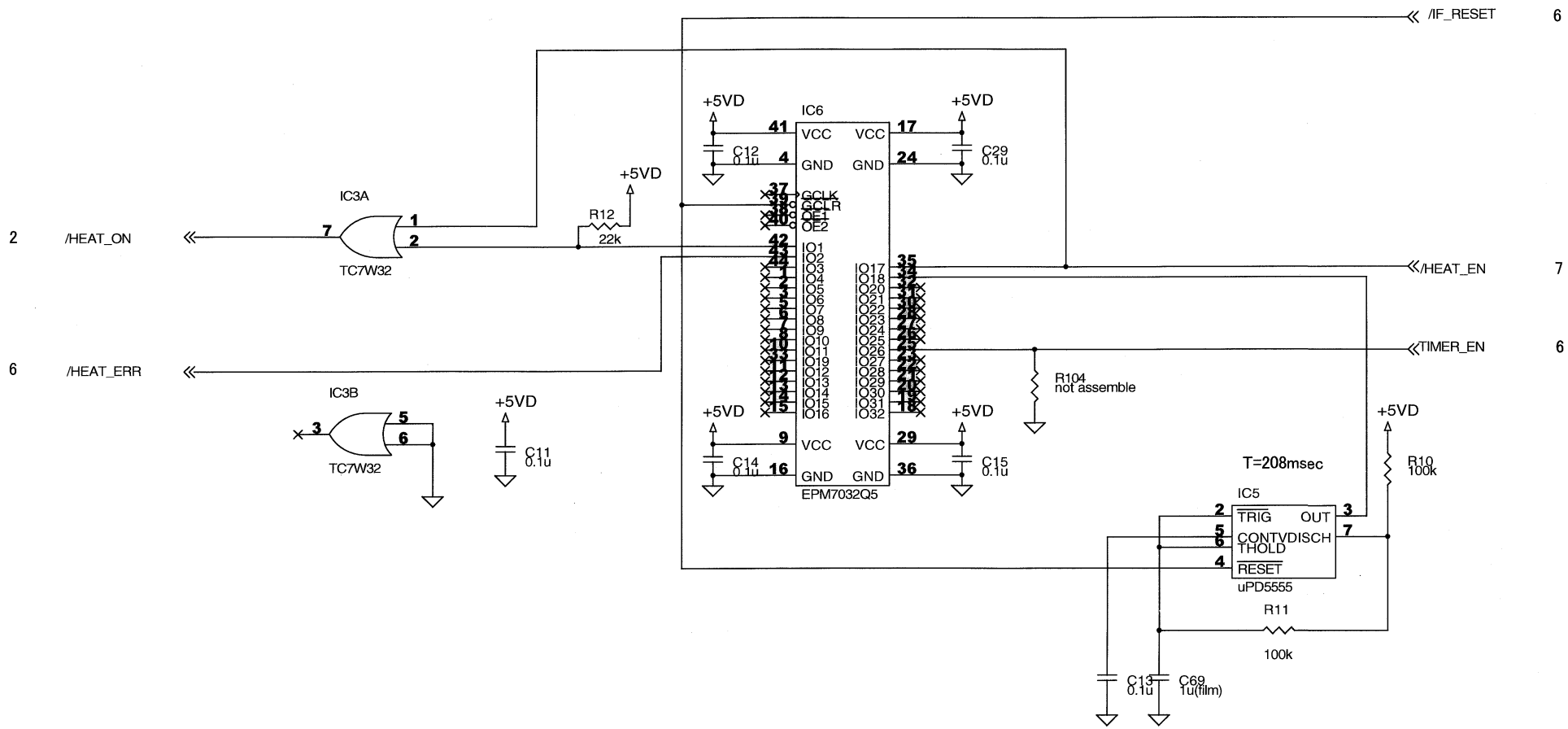

TITLE			DRAWING NO.
TCP BOARD	HEAT SEQUENCE BLOCK	5/7	523-2233
MODEL NO.	ASSEMBLY NO.		DATE
HC-530	PCB-6619A		

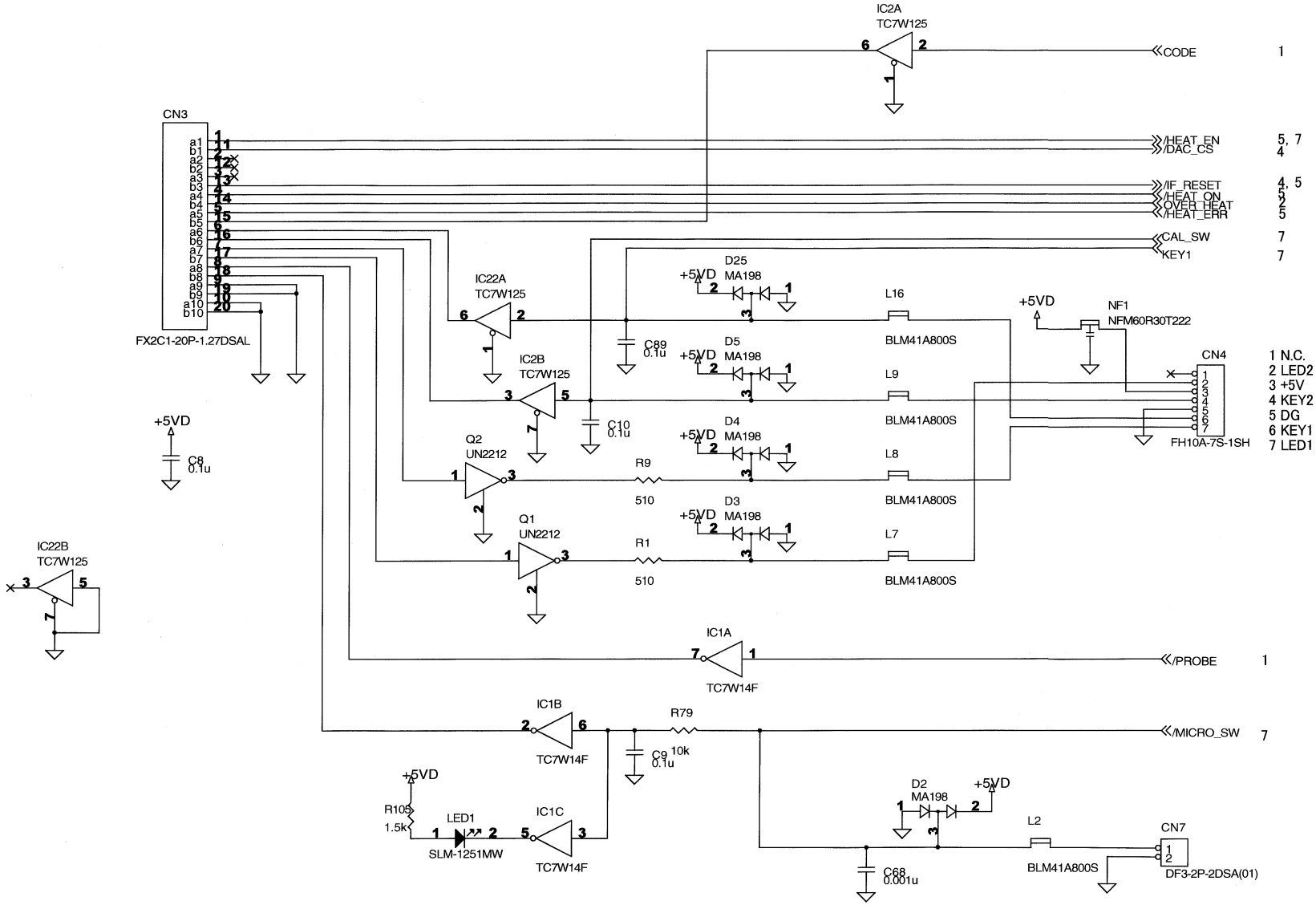

TITLE			DRAWING NO.
TCP BOARD	CONNECTOR BLOCK1	6/7	523-2233
MODEL NO.	ASSEMBLY NO.		DATE
HC-530	PCB-6619A		

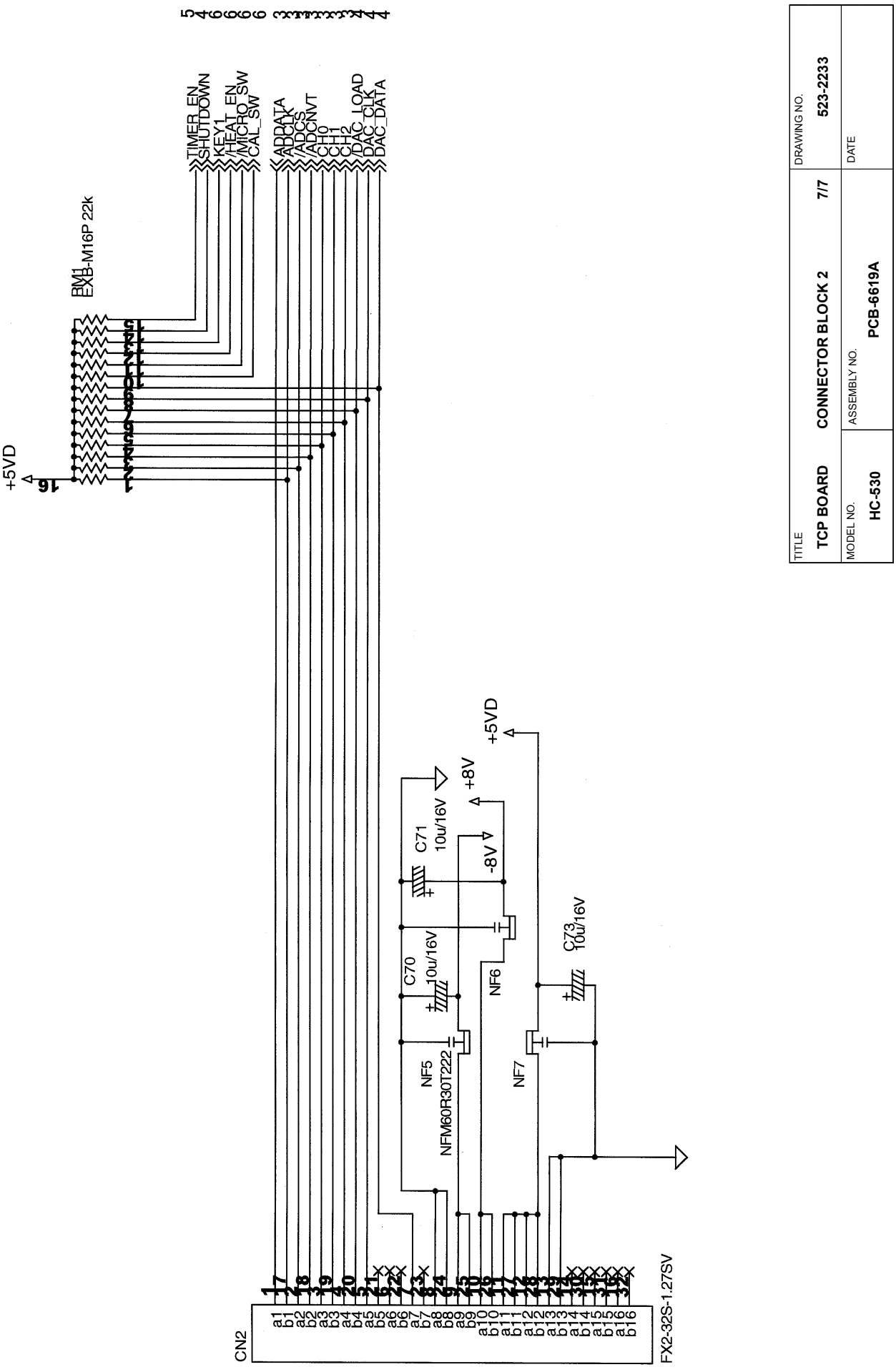
TIMER_EN
SHUTDOWN
KEY1
/HEAT_EN
/MICRO_SW
CAL_SW
ADDATA
ADCLK
/ADCS
/ADCNVT
CH0
CH1
CH2
DAC_LOAD
DAC_CLK
DAC_DATA
+5VD
RM1
EXB-M16P 22k
CN2
FX2-32S-1.27SV
C71
10u/16V
C70
10u/16V
C73
10u/16V
+8V
-8V
+5VD
NF5
NFM60R30T222
NF6
NF7
TITLE
TCP BOARD
CONNECTOR BLOCK 2
7/7
DRAWING NO.
523-2233
MODEL NO.
HC-530
ASSEMBLY NO.
PCB-6619A
DATE

Chapter 11

Assembly Diagram

HJ-500 11-1
HJAMP 11-1
HJRESP 11-4
HJCPU 11-7
HJPWR 11-10

HC-530 11-13
IF Board PCB-6597 434-5394 11-13
TCP Board PCB-6619 433-5516 11-15

Precautions

1.Notes on installation

(1)The height of the parts on surface C must not exceed 10.0 mm and the height of the parts on surface S must not exceed 4.0 mm (excluding the connector).

(2)The lead length must be 1.5 mm or shorter (excluding the connector).

2.Cleansing

Cleanse the parts to be prepared for moisture -proof treatment.

3.Notes on product labels

The product label for the product number ② must be affixed to position A in the orientation shown in Figure 1.

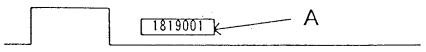

Figure 1 Orientation of product label
Note: The serial number in the above figure is an example.

4.Installing C2, C8, C9, C16, C17, C22, C23, C32, and C33 (capacitor, covers)

Place product ③ on the leads and install the capacitor covers over IC2, IC6, IC7, IC13, IC17, IC18, IC24, and IC25 as shown in Figure 2.

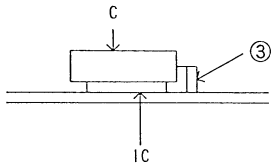

Figure 2 Installing capacitor, covers

5.Installing the G3E01151

Solder product ④ -2 to CN2 and ④ -3 to CN5 as shown in Figure 3.

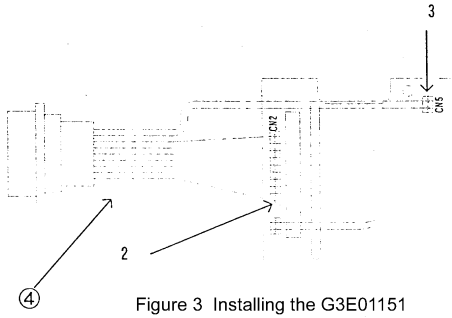

Figure 3 Installing the G3E01151

6.Installing the G3E01152

Solder product ⑤ -1 to CN4 as shown in Figure 4.

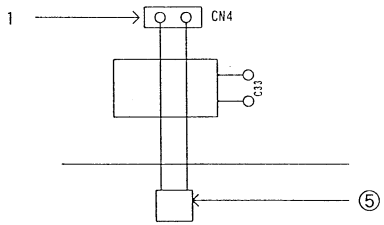

Figure 4 Installing the G3E01152

7.Moisture-proof treatment

After completion of adjustments, apply product ⑥ over the entire surfaces of C and S planes for moisture proofing.

Apply product ⑥ in such a manner that C2, C8, C9, C16, C22, C23, C32, and C33 are secured.

Q'ty	Key No.	Description
1	①	CCP1556B(HJAMP)
1	②	Prodution seal (5×20mm)
18	③	Blue tube φ1×4mm
1	④	G3E01151
1	⑤	G3E01152
	⑥	KR-112

TITLE		DRAWING NO.
HJAMP 1/3		
MODEL NO. **HJ-500**	ASSEMBLY NO.	DATE

Component Side

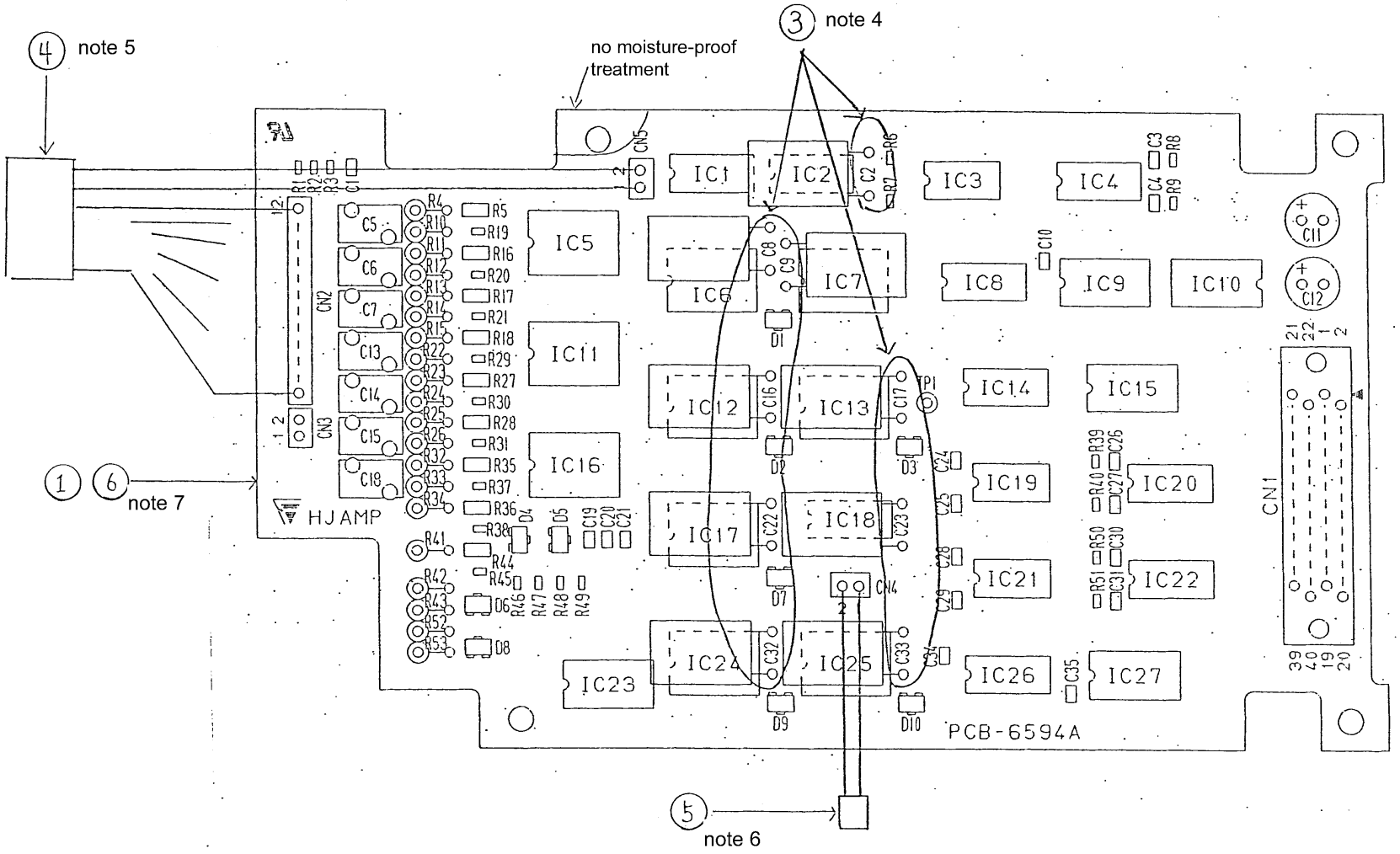

TITLE		DRAWING NO.
HJAMP 2/3		
MODEL NO. **HJ-500**	ASSEMBLY NO.	DATE

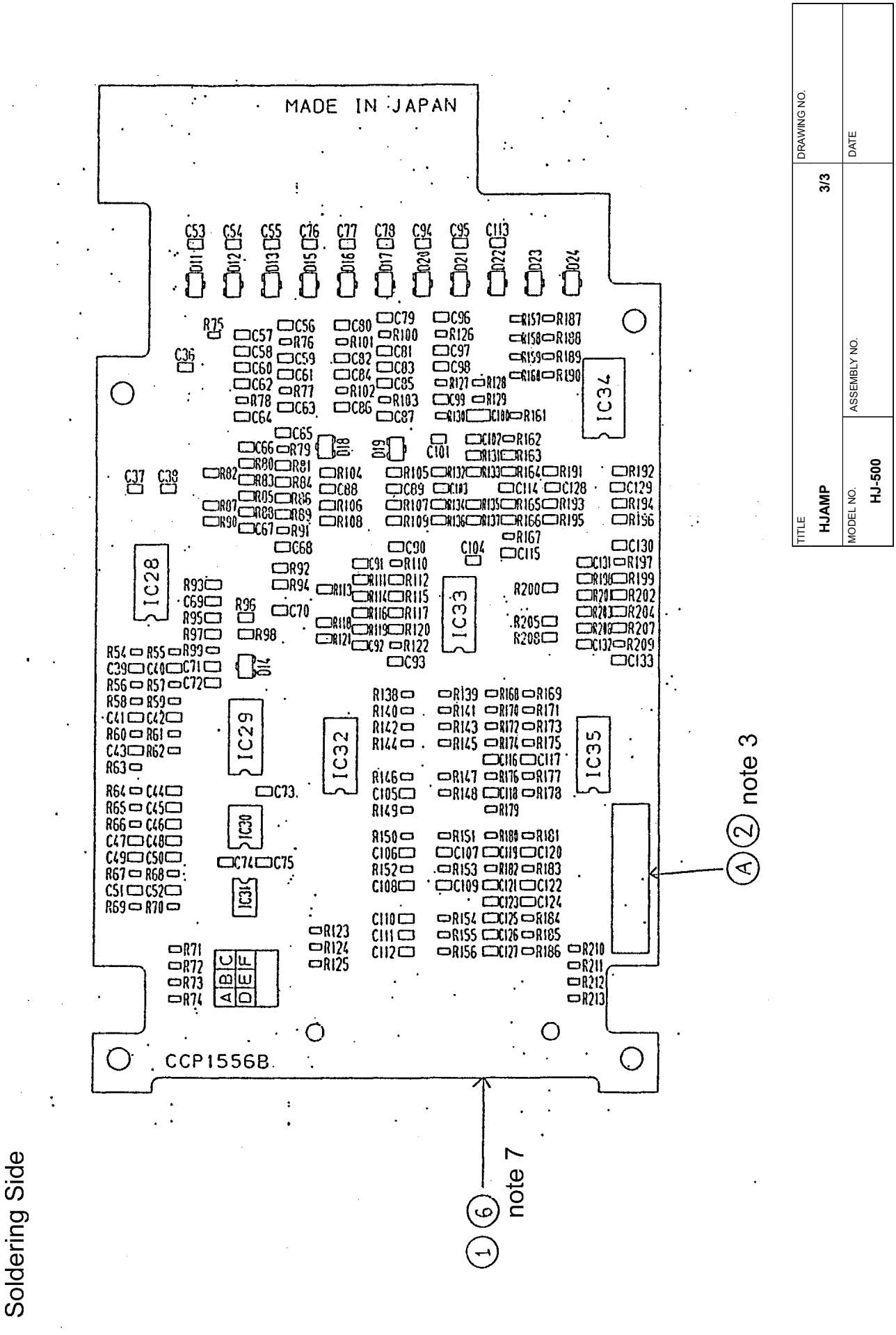
Soldering Side
MADE IN JAPAN
CCP1556B
IC28
IC29
IC30
IC31
IC32
IC33
IC34
IC35
note 3
note 7
TITLE
HJAMP
DRAWING NO.
3/3
MODEL NO.
HJ-500
ASSEMBLY NO.
DATE

Precautions

1.Notes on installation

(1)The height of the parts on surface C must not exceed 10.0 mm and the height of the parts on surface S must not exceed 4.0 mm (excluding the connector).

(2)The lead length must be 1.5 mm or shorter (excluding the connector).

2.Cleansing

Cleanse the parts to be prepared for moisture-proof treatment.

3.Notes on product labels

The product label for the product number ② must be affixed to position A in the orientation shown in Figure 1.

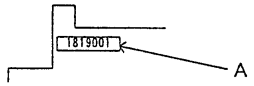

Figure 1 Orientation of product label

Note: The serial number in the above figure is an example.

4.Installing C302

Place product ③ on the leads and install the capacitor covers over IC303, IC304 as shown in Figure 2.

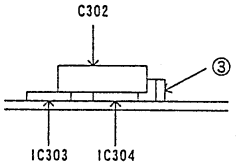

Figure 2 Installing C302

5.Installing C312, C318

Place product ③ on the leads and install the capacitor covers over IC306, IC310 as shown in Figure 3.

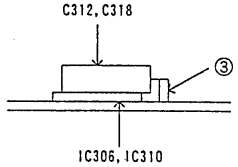

Figure 3 Installing C318

6.Installing XJP301

Install the XJP301 between JP301-1 and JP301-2.

7.Moisture-proof treatment

After completion of adjustments, apply product ④ in the specified areas of surfaces on the C and S planes for moisture proofing. Do not apply product ④ to VR301, VR302, and VR306.

Apply product ④ in such a manner that C302, C316, and C318 are secured.

Q'ty	Key No.	Description
1	①	CCP1555B (HJRESP)
1	②	Prodution seal (5 × 20mm)
6	③	Blue tube φ1×4mm
	④	KR112

TITLE		DRAWING NO.
HJRESP 1/3		
MODEL NO. **HJ-500**	ASSEMBLY NO.	DATE

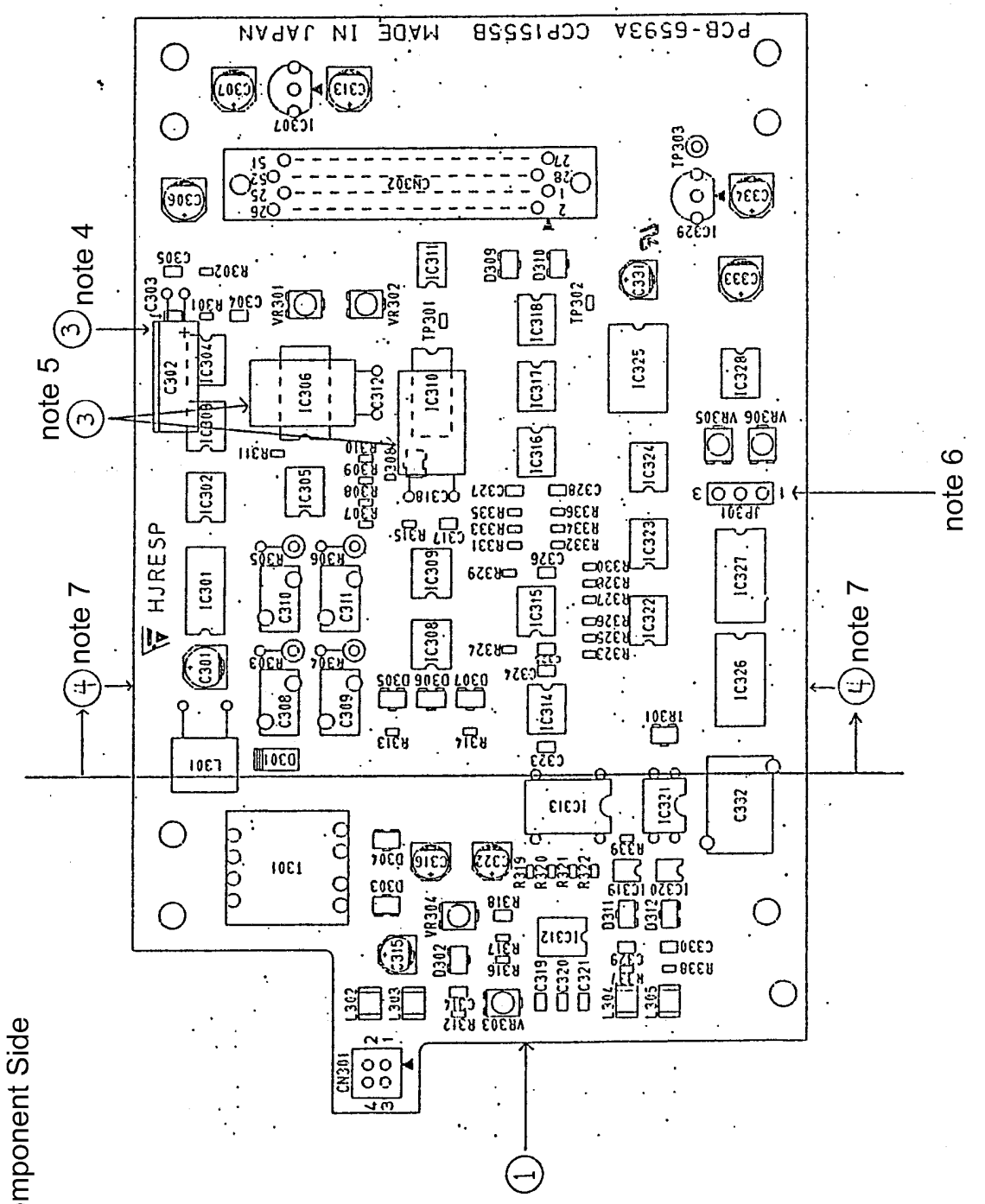

Component Side

TITLE			DRAWING NO.
HJRESP	2/3		
MODEL NO.		ASSEMBLY NO.	DATE
HJ-500			

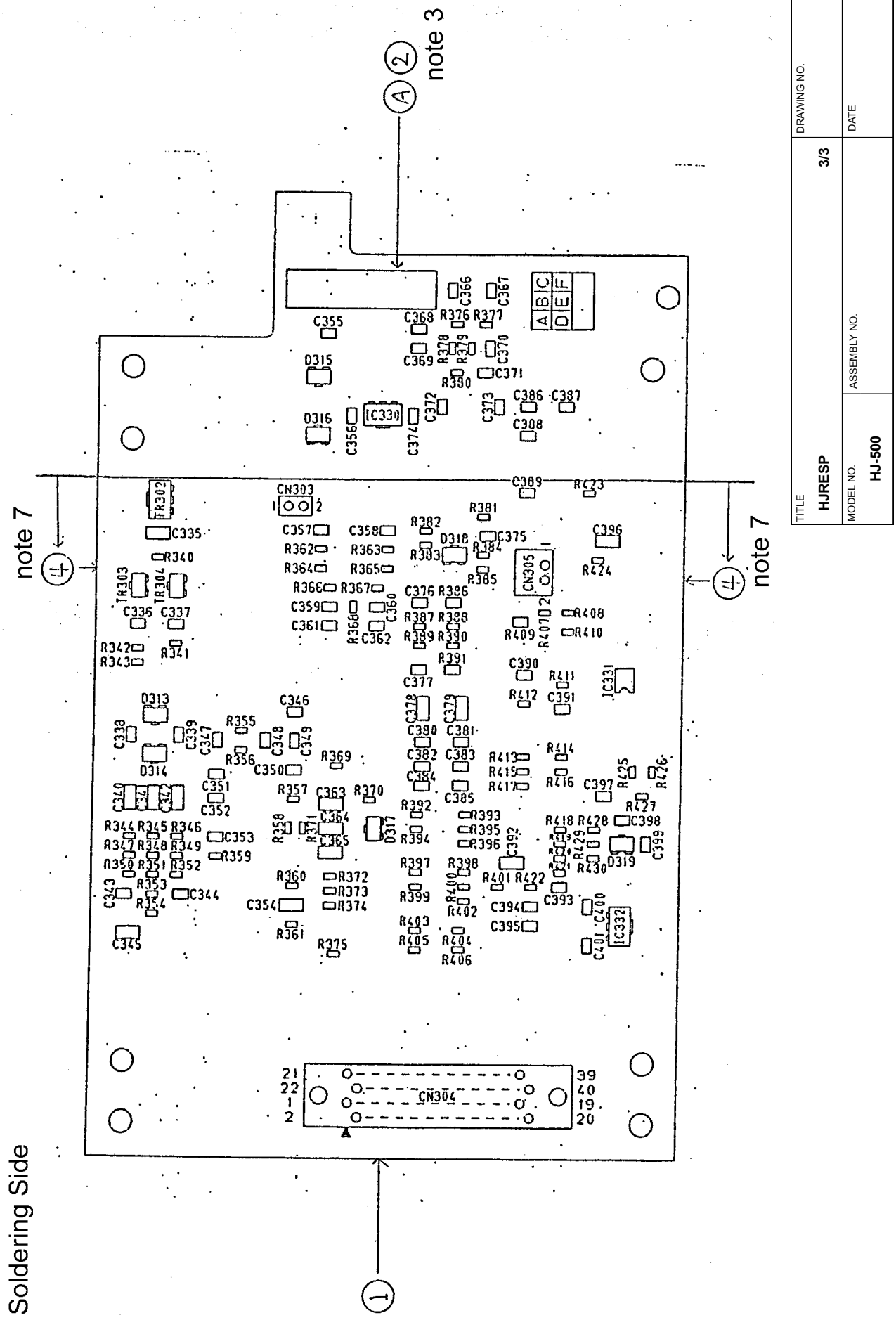
note 3
note 7
note 7
Soldering Side
CN303
CN304
CN305
IC330
IC331
IC332
TITLE
HJRESP
DRAWING NO.
3/3
MODEL NO.
HJ-500
ASSEMBLY NO.
DATE

Precautions

1.Notes on installation

(1)The height of the parts on surface C must not exceed 10.0 mm and the height of the parts on surface S must not exceed 4.0 mm (excluding the connector).

(2)The lead length must be 1.5 mm or shorter (excluding the connector).

2.Cleansing

Cleansing is not required.

3.Notes on product labels

The product label for the product number ② must be affixed to position A in the orientation shown in Figure 1.

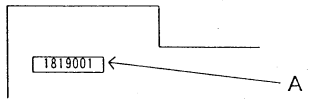

Figure 1 Orientation of product label
Note: The serial number in the above figure is an example.

4.Installing the RT501 (thermistor)

Place product ③ on the leads and install the capacitor covers over as shown in Figure 2.

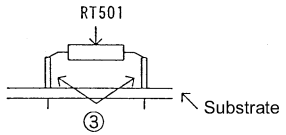

Figure 2 Installing RT501

5. Installing the X501 (crystal element)

Install the XX-501 (crystal socket) as shown in Figure 3.

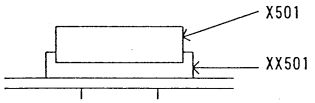

Figure 3 Installing X501

6. Installing XJP501 and XJP502

(1)Install the XJP501 between JP501-1 and JP501-2.

(2)Install the XJP502 between JP502-1 and JP502-2.

7.Installing G3E01144

Solder product ④ -2 to CN501 as shown in Figure 4.

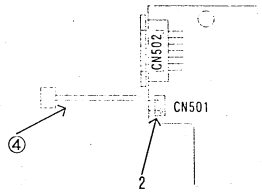

Figure 4 Installing G3E01144

Q'ty	Key No.	Description
1	①	CCP1554B (HJCPU)
1	②	Prodution seal (5×20mm)
2	③	Blue tube φ1×4mm
1	④	G3E01144

TITLE		DRAWING NO.
HJCPU **1/3**		
MODEL NO. **HJ-500**	ASSEMBLY NO.	DATE

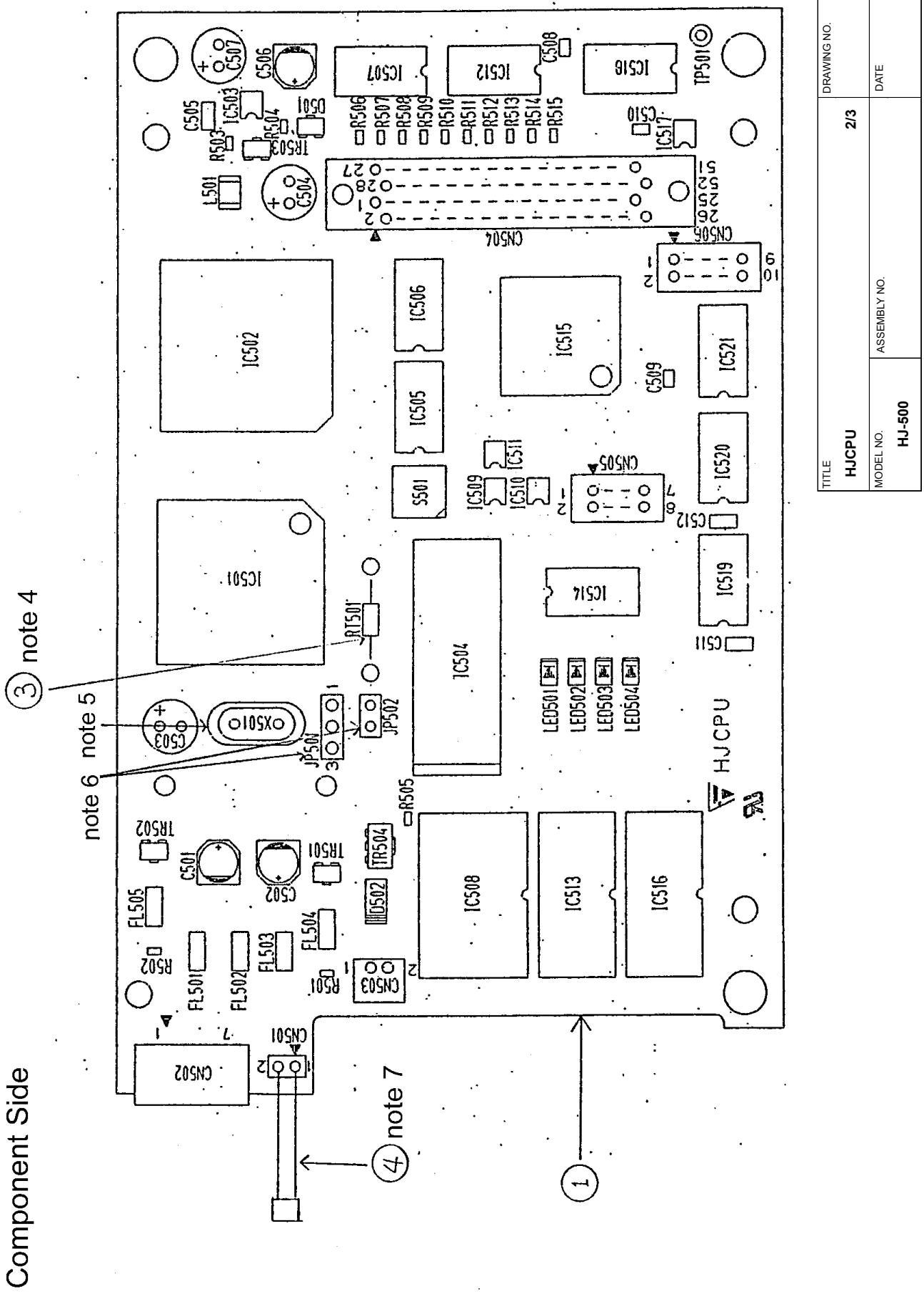
Component Side
note 4
note 5
note 6
note 7
HJCPU
TITLE
HJCPU
DRAWING NO.
2/3
MODEL NO.
HJ-500
ASSEMBLY NO.
DATE

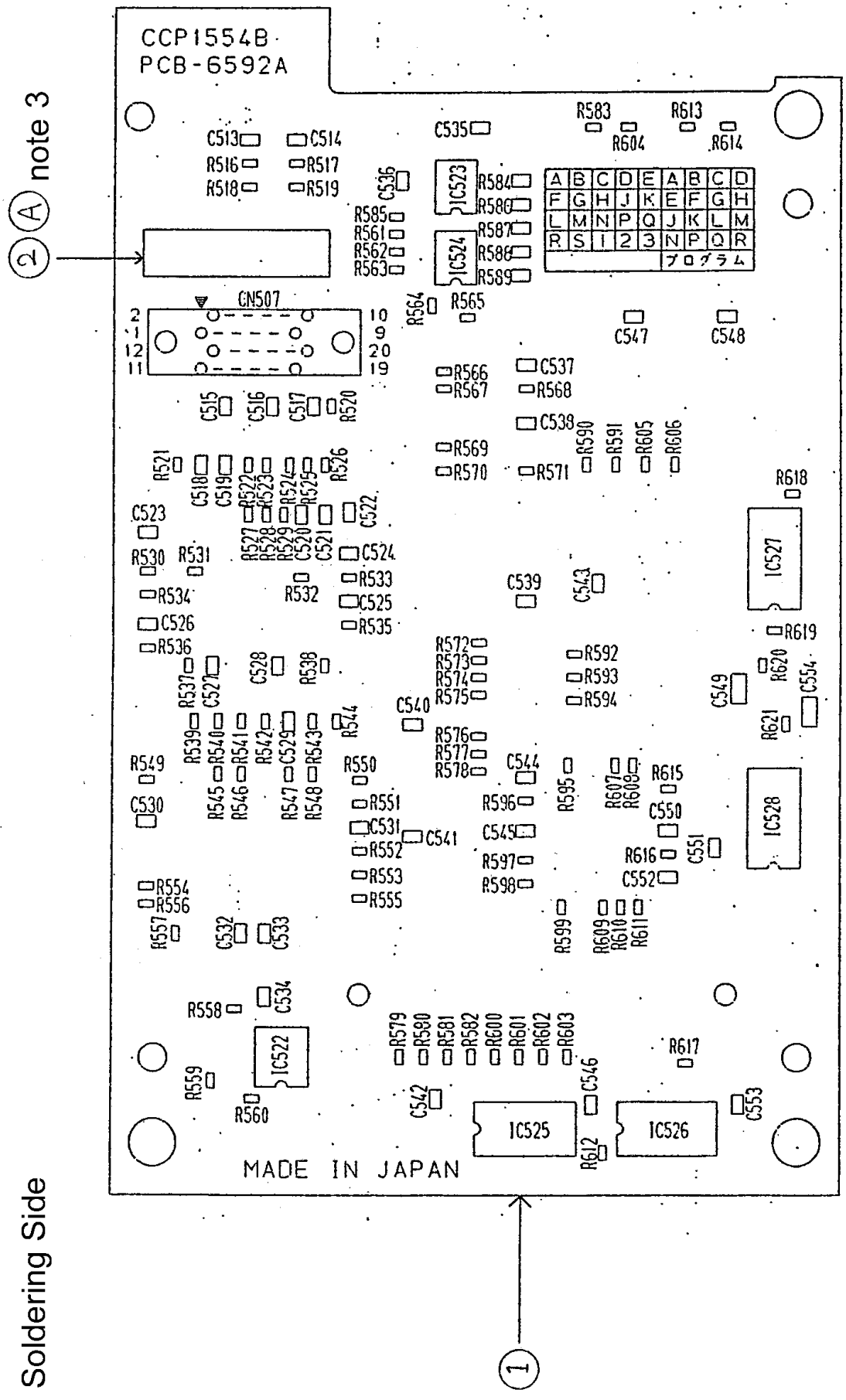

TITLE	DRAWING NO.
HJCPU	3/3
MODEL NO.	ASSEMBLY NO.
HJ-500	
	DATE

Precautions

1.Notes on installation

(1)The height of the parts on surface C must not exceed 10.0 mm and the height of the parts on surface S must not exceed 4.0 mm (excluding the connector).

(2)The lead length must be 1.5 mm or shorter (excluding the connector).

2. Cleansing

Cleansing is not required.

3.Notes on product labels

The product label for the product number ② must be affixed to position A in the orientation shown in Figure 1.

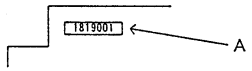

Figure 1 Orientation of product label

Note: The serial number in the above figure is an example.

4.Installing F701 (thermal fuse)

(1)Installation notes

Reflow is inhibited.

Manual soldering is required.

The solder temperature must be 300 °C and soldering must be completed within 3 seconds.

Pretinning is not required.

After completion of installation, check for conductivity using a circuit tester.

(2)Install products ⑤ and ⑥ over the leads as shown in Figure 2.

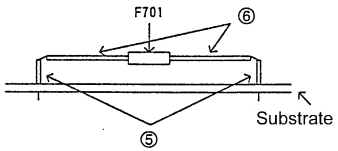

Figure 2 Installing the F701

5.Installing F702

Place product ⑤ on the leads and install the capacitor covers over as shown in Figure 3.

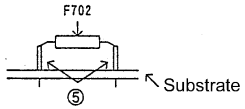

Figure 3 Installing the F702

6.Installing L706 (coil choke)

Install product ③ over the leads as shown in Figure 4. Secure product ⑧.

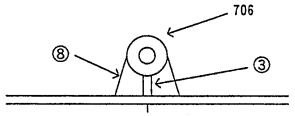

Figure 4 Installing the coil

7.Installing C725, C731, C733, C742, C746, C747

Place product (4) on the leads and install the capacitor covers over as shown in Figure 5. Secure product ⑧.

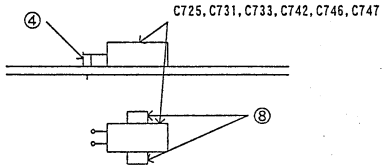

9.Installing the jumper

Install jumper JP1 to short-circuit between the through holes in the positions shown below:

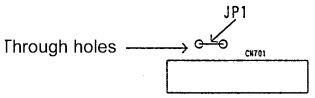

Q'ty	Key No.	Description
1	①	CCP1553C(HJPWR)
1	②	Prodution seal (5×20mm)
6	③	Blue tube φ1×2mm
12	④	Blue tube φ1×3mm
4	⑤	Blue tube φ1×4mm
2	⑥	Blue tube φ1×25mm
	⑦	
	⑧	KE347T

TITLE		DRAWING NO.
HJPWR **1/3**		
MODEL NO. **HJ-500**	ASSEMBLY NO.	DATE

Component Side

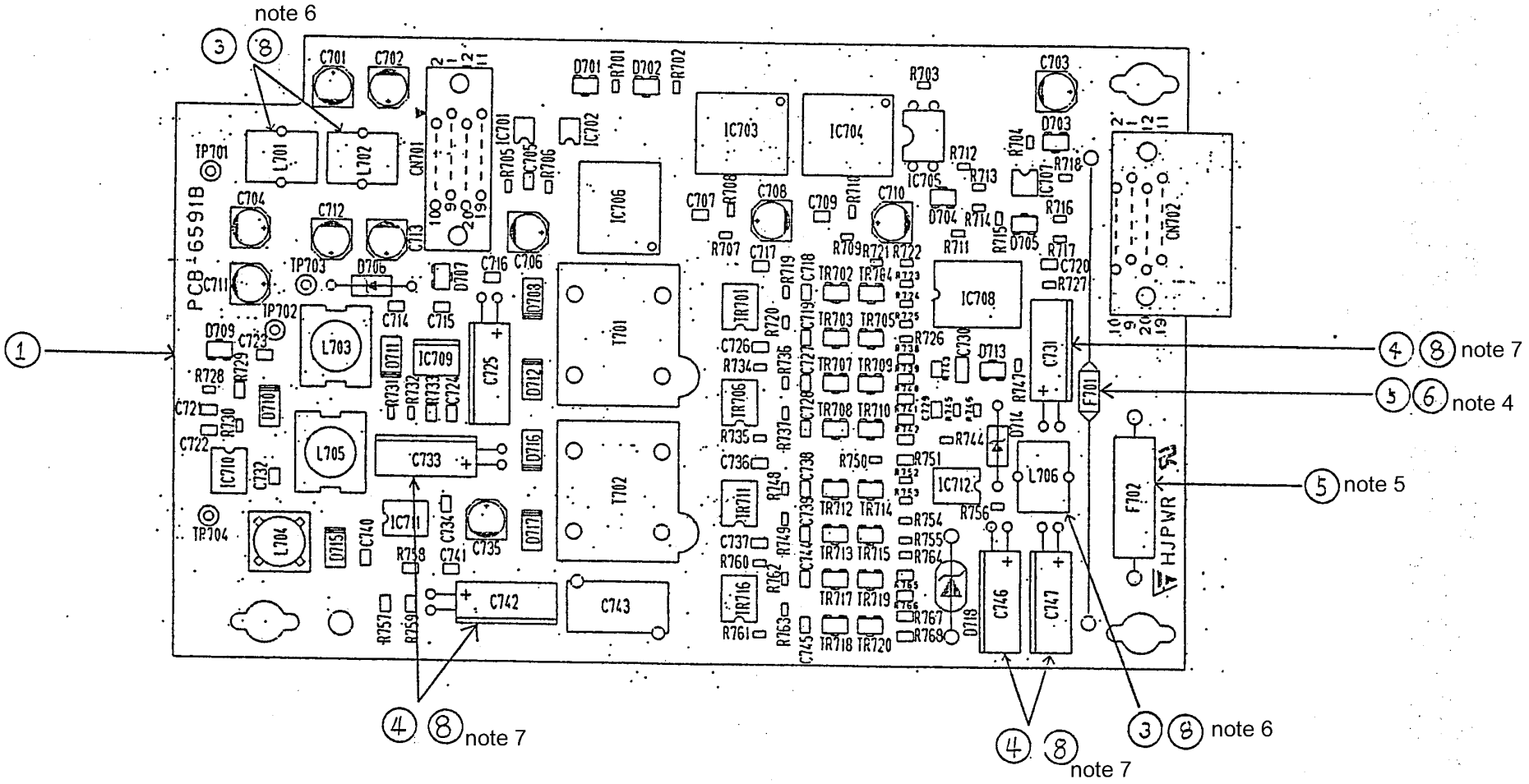

TITLE		DRAWING NO.
HJPWR 2/3		
MODEL NO. HJ-500	ASSEMBLY NO.	DATE

Soldering Side

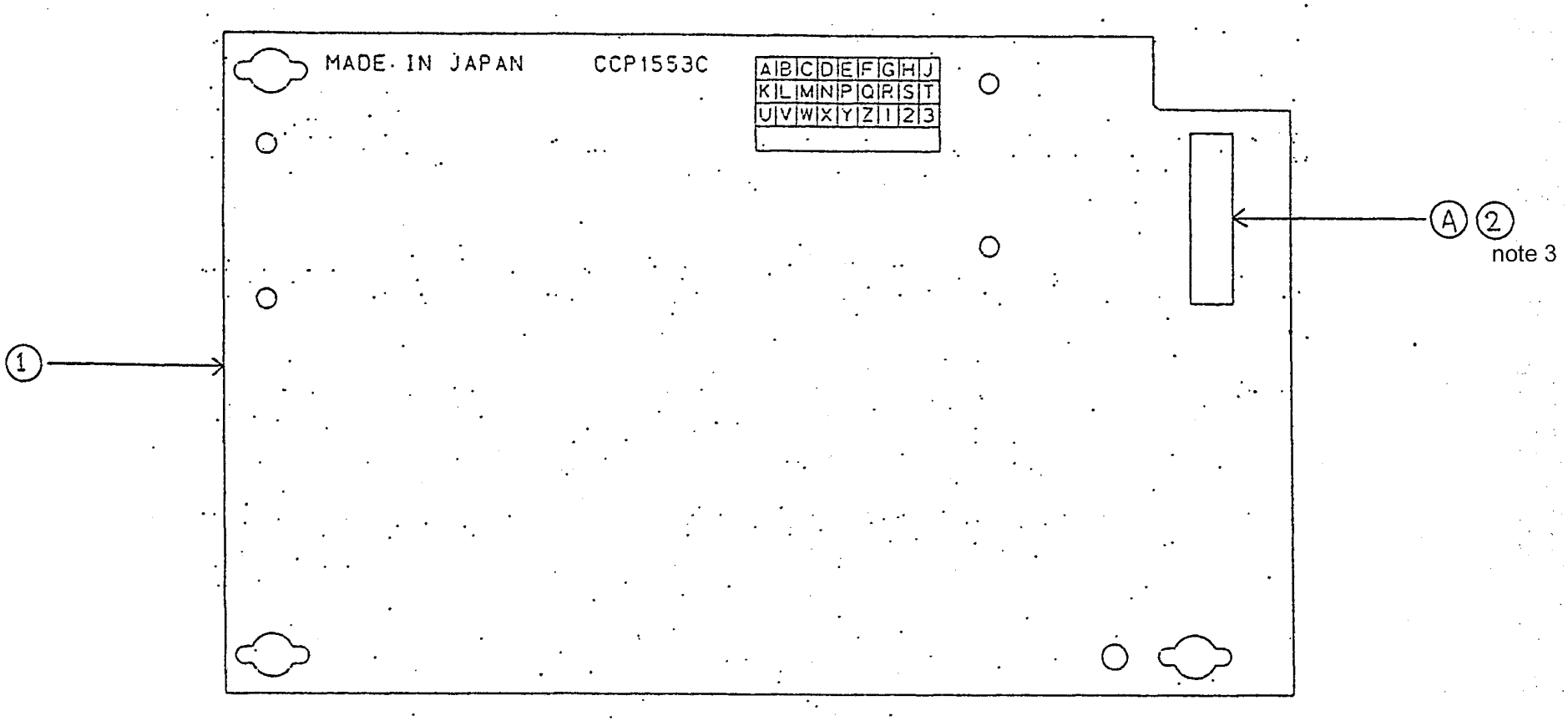

TITLE		DRAWING NO.
HJPWR 3/3		
MODEL NO. **HJ-500**	ASSEMBLY NO.	DATE

PCB-6597A Component Side

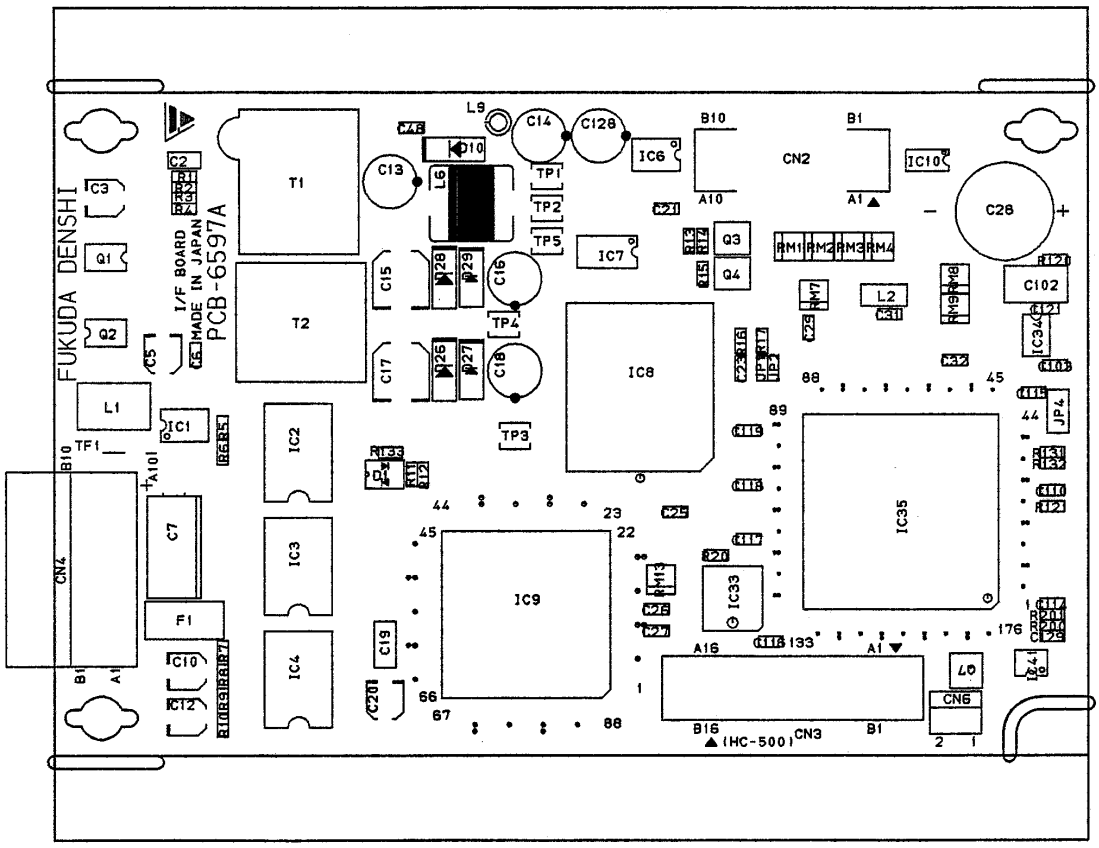

TITLE		DRAWING NO.
I/F Board 1/2		**434－5394**
MODEL NO.	ASSEMBLY NO.	DATE
HC-530	**PCB-6597A**	

Soldering Side

PCB-6597A

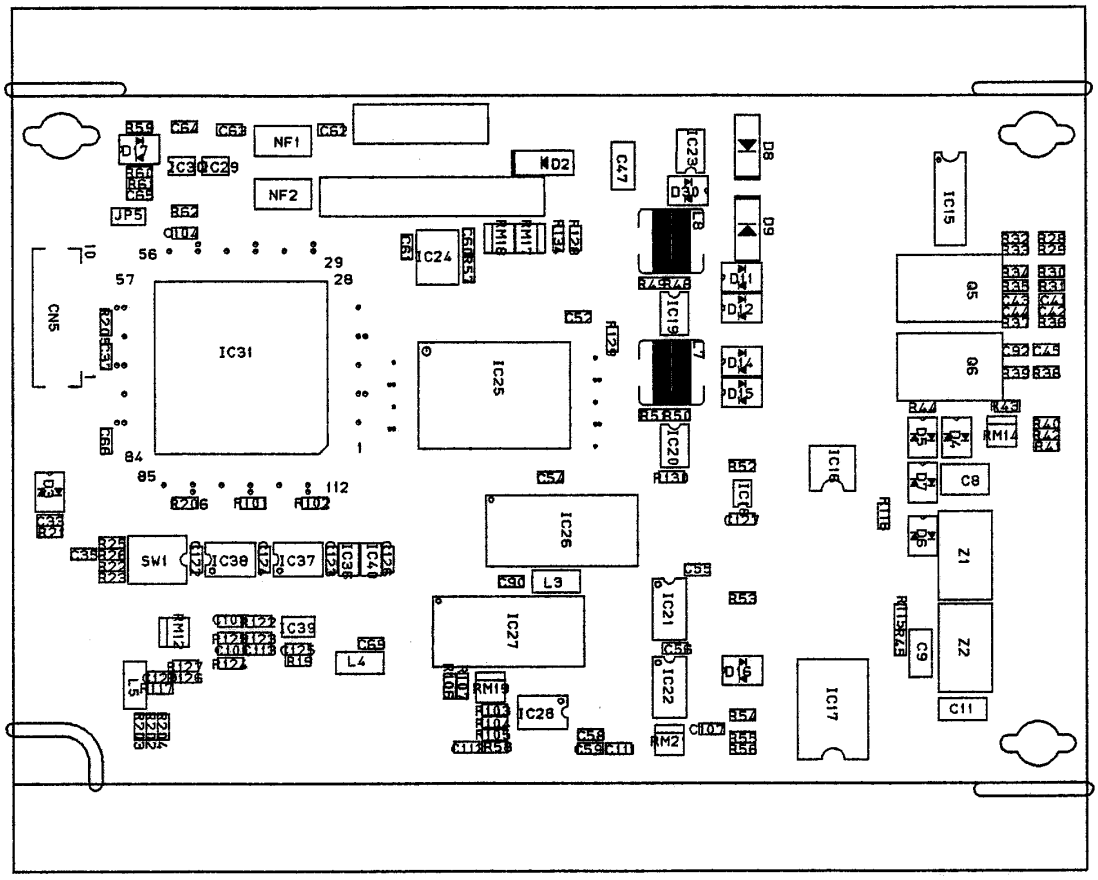

TITLE		DRAWING NO.
I/F Board 2/2		**434－5394**
MODEL NO.	ASSEMBLY NO.	DATE
HC-530	**PCB-6597A**	

PCB-6619A

Component Side

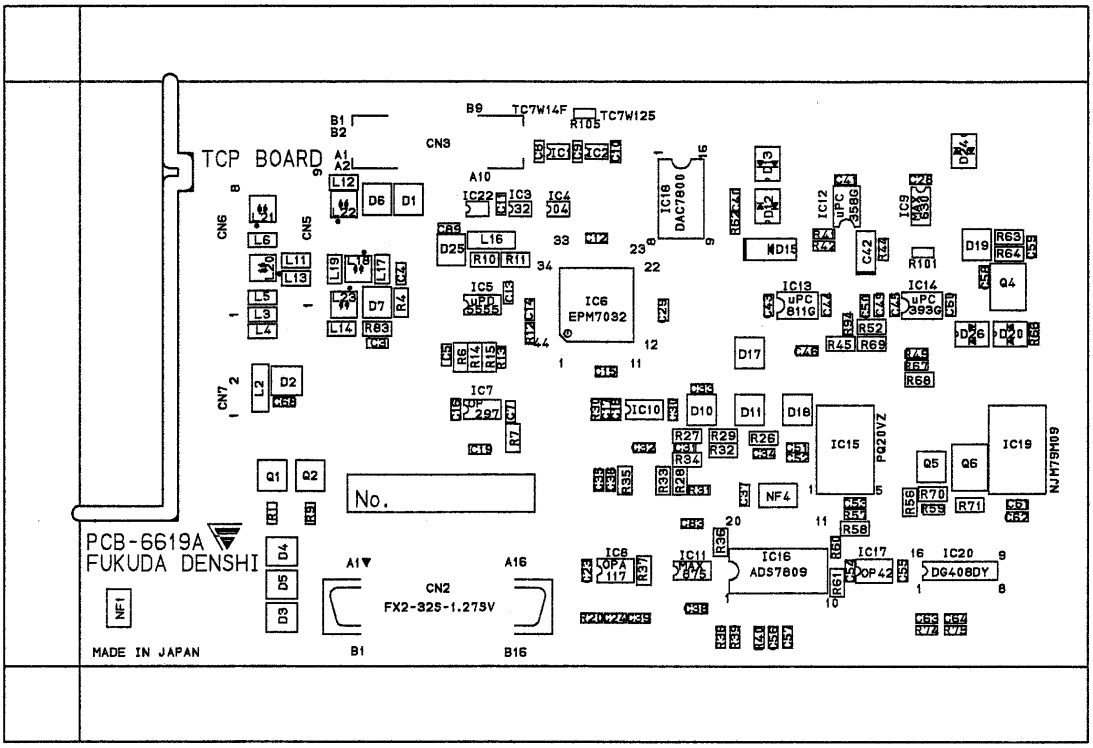

TITLE		DRAWING NO.
TCP Board 1/2		**433－5516**
MODEL NO.	ASSEMBLY NO.	DATE
HC-530	**PCB-6619A**	

Soldering Side

PCB-6619A

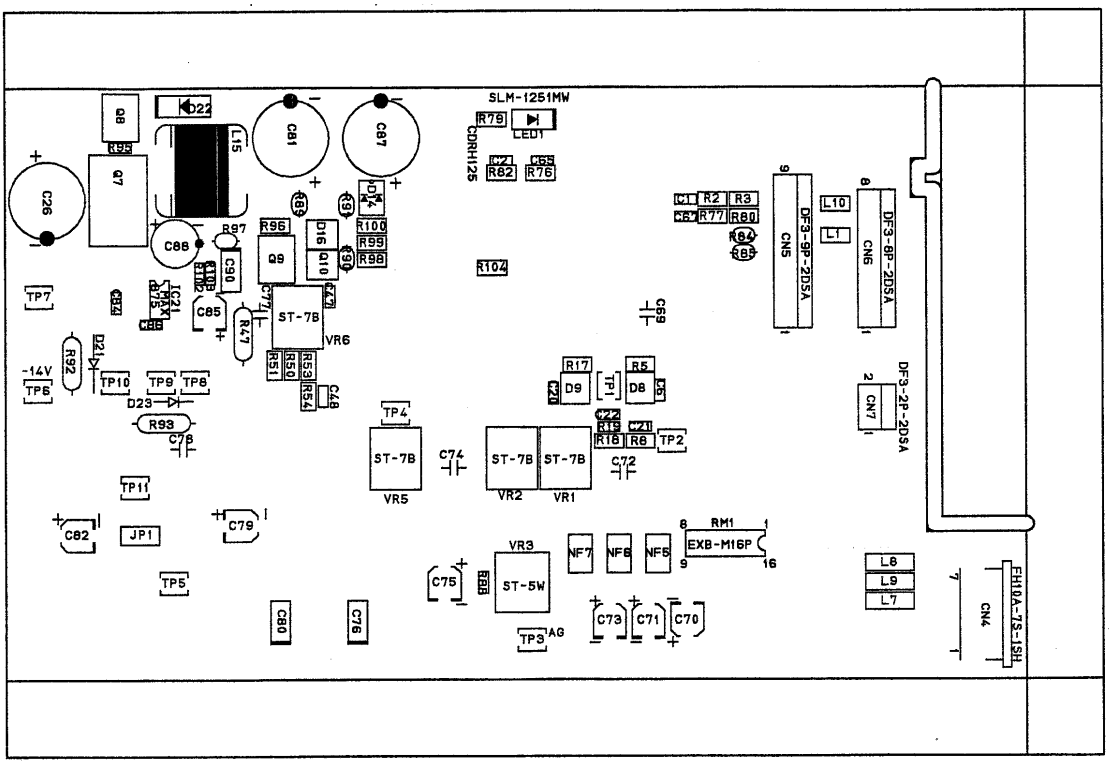

TITLE		DRAWING NO.
TCP Board 2/2		**433－5516**
MODEL NO.	ASSEMBLY NO.	DATE
HC-530	**PCB-6619A**	

Chapter 12

Secondary Process Diagram

HJ-500 12-1
HJRESP 12-1
HJCPU 12-2

HC-530 12-3
IF Board PCB-6597 434-5395 12-3
TCP Board PCB-6619 433-5531 12-4

HJRESP

1.Connect the 5th and 10th pins of IC326 with jumper.

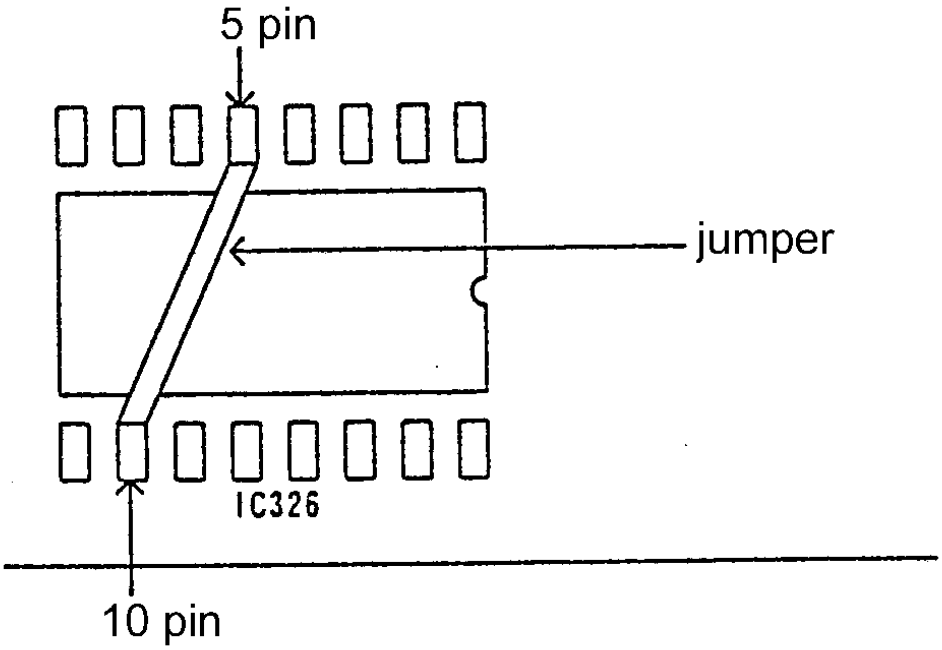

TITLE **HJRESP** **SECONDARY PROCESS DIAGRAM**		DRAWING NO.
MODEL NO. **HJ-500**	ASSEMBLY NO.	DATE

HJCPU

1.Connect the 2th and 4th pins of IC511 with jumper.

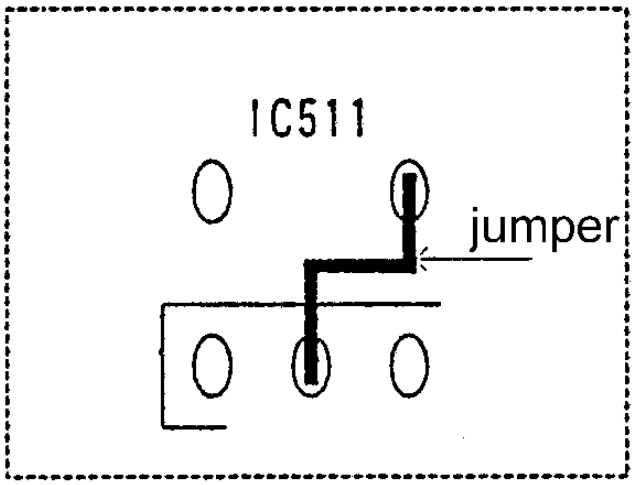

TITLE **HJCPU** **SECONDARY PROCESS DIAGRAM**		DRAWING NO.
MODEL NO. **HJ-500**	ASSEMBLY NO.	DATE

・ Connect L9 with jumper.

・ Fix L1 with SILICON.

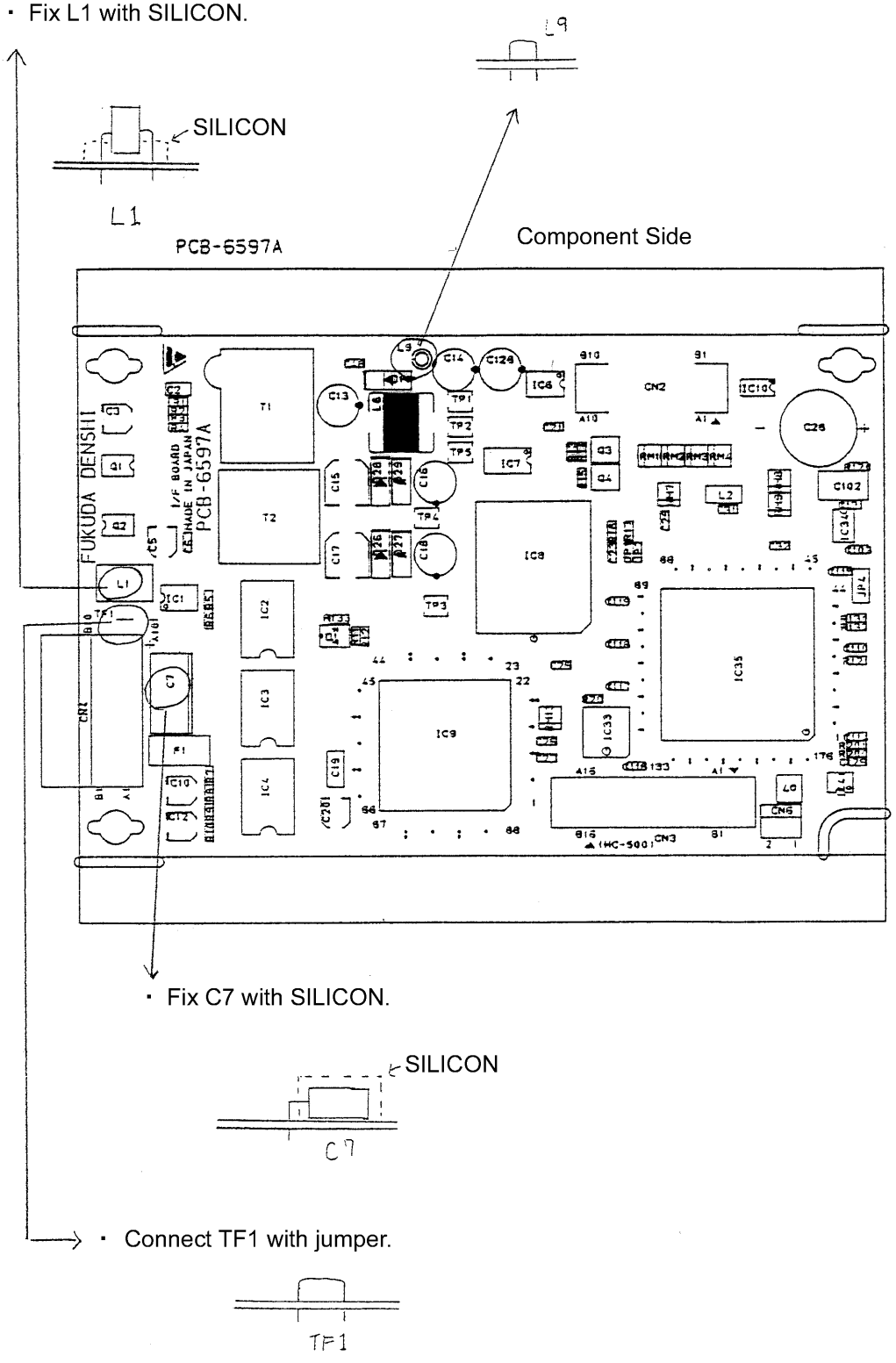

・ Fix C7 with SILICON.

・ Connect TF1 with jumper.

TITLE		DRAWING NO.
I/F BOARD **SECONDARY PROCESS DIAGRAM**		**434－5395**
MODEL NO.	ASSEMBLY NO.	DATE
HC-530	**PCB-6597A**	

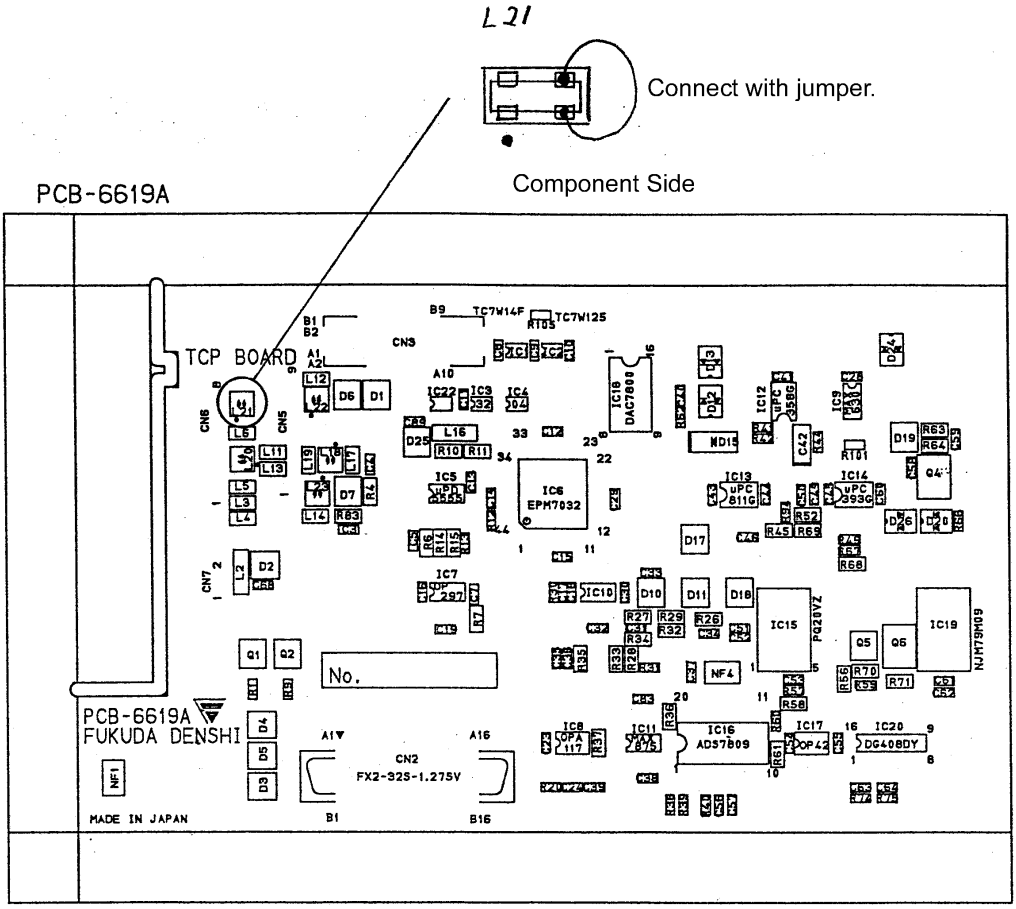

TITLE		DRAWING NO.
TCP BOARD **SECONDARY PROCESS DIAGRAM** **1/2**		**433－5531**
MODEL NO.	ASSEMBLY NO.	DATE
HC-530	**PCB-6619A**	

Soldering side

PCB-6619A

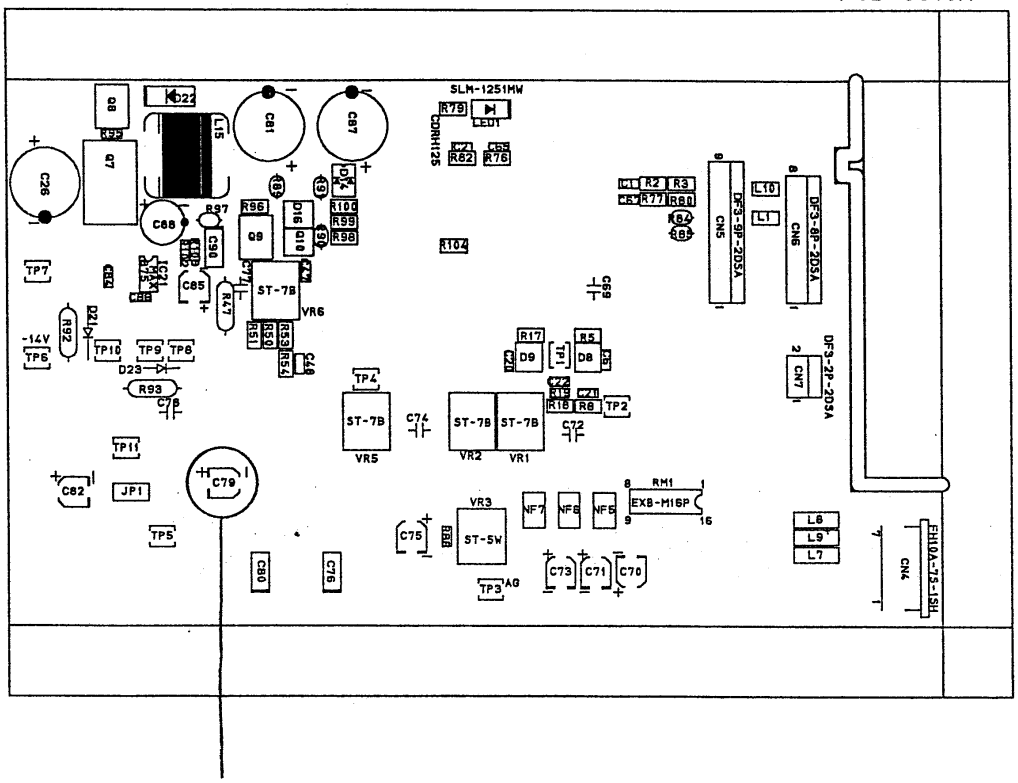

Be aware that positions of silk-printed "+" and "-" are exchanged.
The polarity indicated by the silk-printed capacitor shape is correct.

TITLE		DRAWING NO.
TCP BOARD **SECONDARY PROCESS DIAGRAM 2/2**		**433－5531**
MODEL NO.	ASSEMBLY NO.	DATE
HC-530	**PCB-6619A**	

Chapter 13

Structural Diagram

HJ-500 13-1
ECG Cable Assembly 13-1
PACEMAKER Cable Assembly 13-2
RESP Cable Assembly 13-3
Fan Interface Assembly 13-4
AMP/RESP Board assembly 13-5
CPU Board Assembly 13-7
Power Board Assembly 13-8
Fan Cable Assembly 434-5528 13-9
Analog Out Connector Cable Assembly 324-4208 13-10
PWB Assembly 424-4246 13-11
General Assembly (1) 423-4375 13-12
General Assembly (2) 424-4376 13-13
General Assembly (3) 423-4377 13-14

HC-530 13-15
Input Connector Cable Assembly 434-5505 13-15
Micro Switch Cable Assembly 434-5506 13-16
General Assembly (1) 423-4379 13-17
General Assembly (2) 424-4380 13-18

Q'ty	Key No.	Description
1	1	89.072.446
1	2	DF4-10P-2C
1	3	DF4-2P-2C
12	4	DF4-2428PC

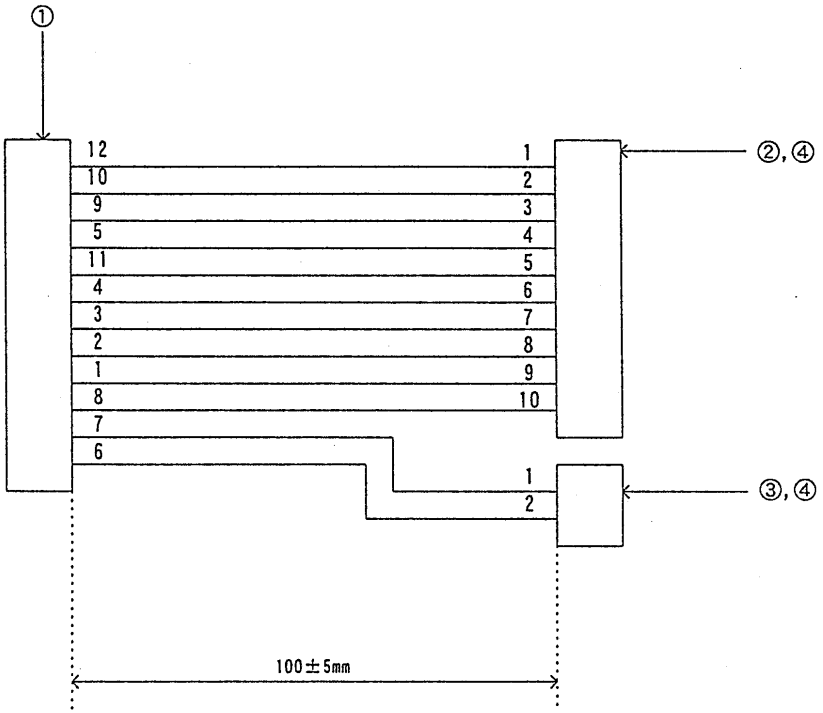

TITLE		DRAWING NO.
ECG Cable Assembly		**G3E01151**
MODEL NO.	ASSEMBLY NO.	DATE
HJ-500		

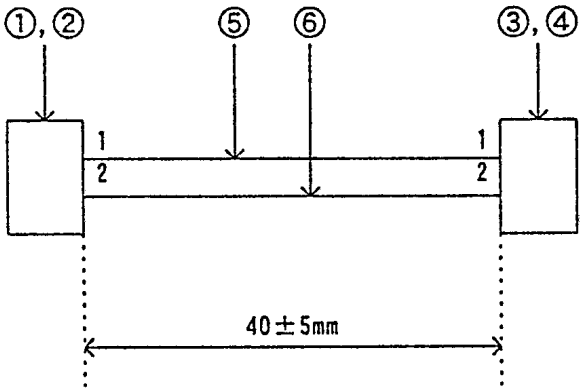

Q'ty	Key No.	Description
1	1	DF4-2P-2C
2	2	DF4-2428PC
1	3	DF3-2S-2C
2	4	DF3-2428SCC
1	5	UL1007-AWG26- brown
1	6	UL1007-AWG26- red

TITLE		DRAWING NO.
PACEMAKER Cable Assembly		**G3E01152**
MODEL NO. **HJ-500**	ASSEMBLY NO.	DATE

Q'ty	Key No.	Description
2	1	DF4-2P-2C
4	2	DF4-2428PC
1	3	UL1007-AWG26- brown
1	4	UL1007-AWG26- red

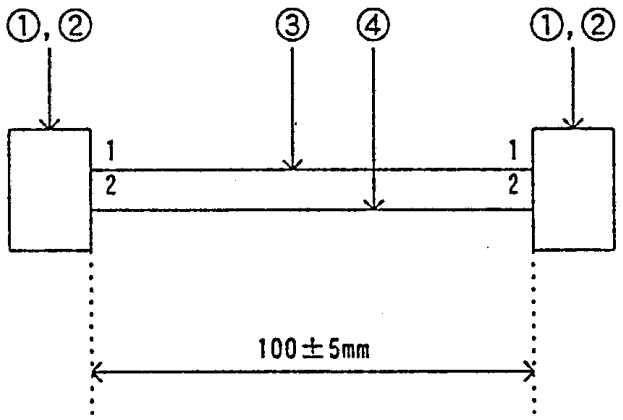

TITLE		DRAWING NO.
RESP Cable Assembly		**G3E01153**
MODEL NO.	ASSEMBLY NO.	DATE
HJ-500		

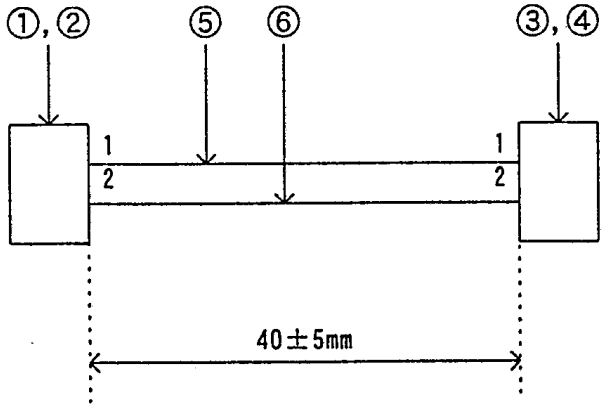

Q'ty	Key No.	Description
1	1	DF3-2EP-2C
2	2	DF3-EP2428PCA
1	3	DF4-2P-2C
2	4	DF4-2428PC
1	5	UL1007-AWG26- red
1	6	UL1007-AWG26- black

TITLE		DRAWING NO.
FAN Interface Cable Assembly		**G3E01144**
MODEL NO.	ASSEMBLY NO.	DATE
HJ-500		

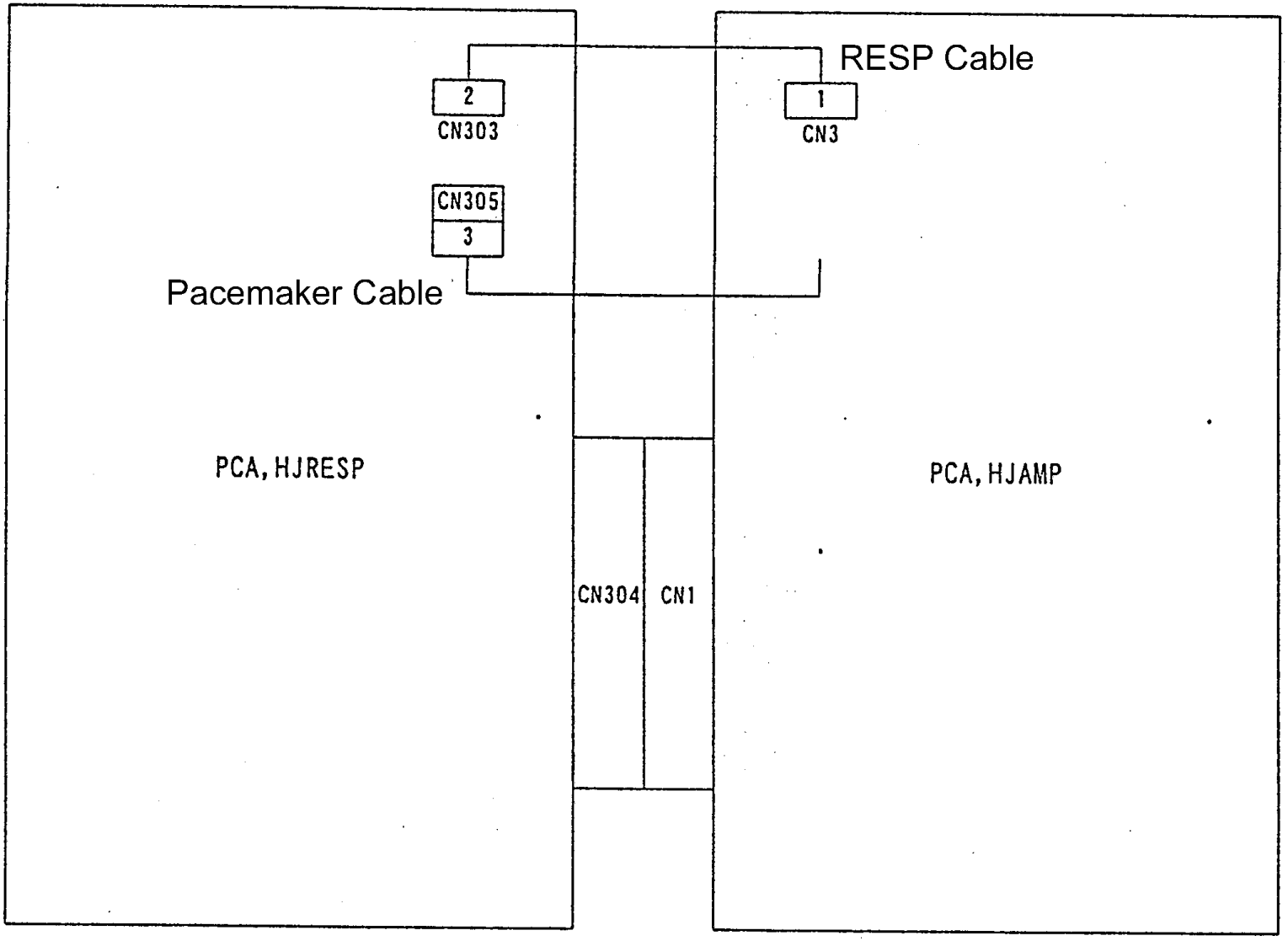

TITLE		DRAWING NO.
AMP/RESP BOARD ASSEMBLY 1/2		
MODEL NO. **HJ-500**	ASSEMBLY NO.	DATE

		Q'ty	Key No.	Description
		1	1	HJAMP Board
		1	2	HJRESP Board
		4	3	2.6SP-13, Pole
P		8	4	(SWPBW) PAN-FE-M2.6x8 Screw
		1	5	RESP Cable

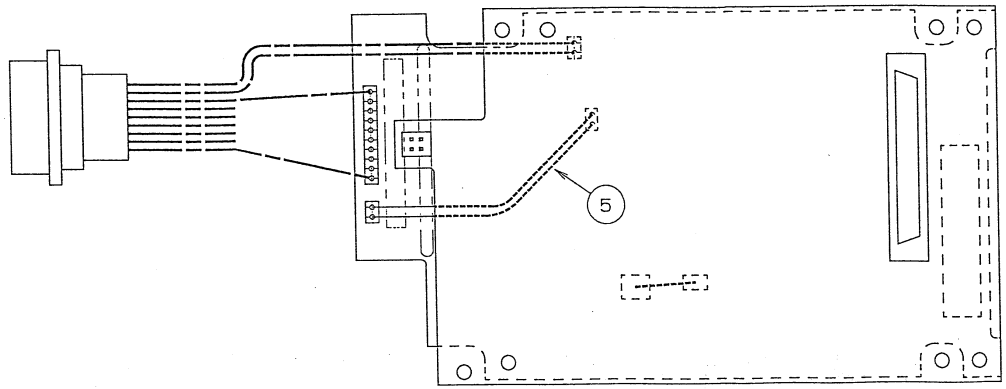

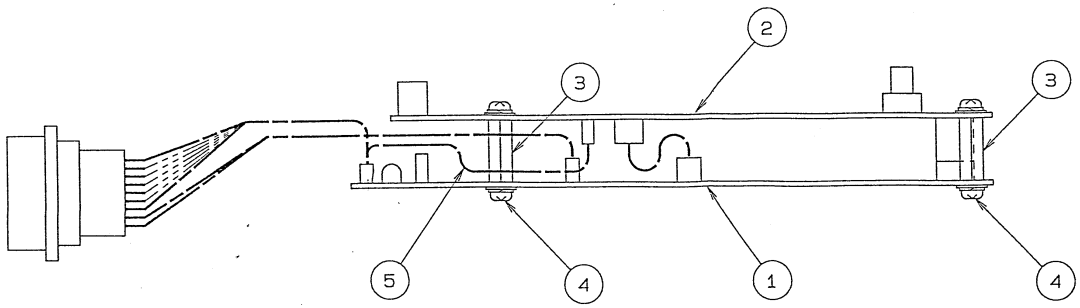

TITLE		DRAWING NO.
AMP/RESP BOARD ASSEMBLY **2/2**		
MODEL NO. **HJ-500**	ASSEMBLY NO.	DATE

	Q'ty	Key No.	Description
	1	1	HJCPU Board
	2	2	2.6SP-13 , Pole
P	2	3	(SWPBW) PAN-FE-M2.6x8 Screw

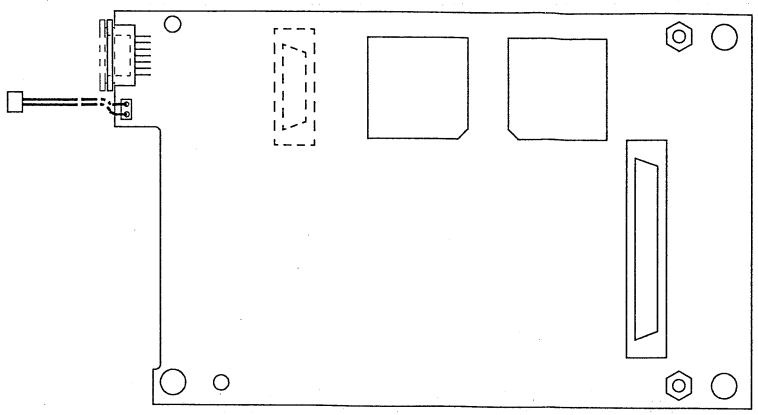

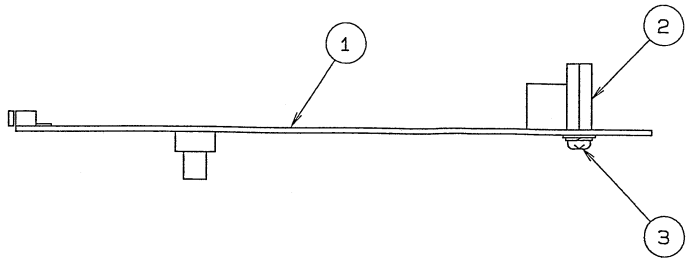

TITLE		DRAWING NO.
CPU BOARD ASSEMBLY		
MODEL NO. **HJ-500**	ASSEMBLY NO.	DATE

		Q'ty	Key No.	Description
		1	1	HJPWR Board
		3	2	PWB Strut
		1	3	2.6SP-13 , Pole
ア		1	4	(SWPBW) PAN-FE-M2.6x8 Screw

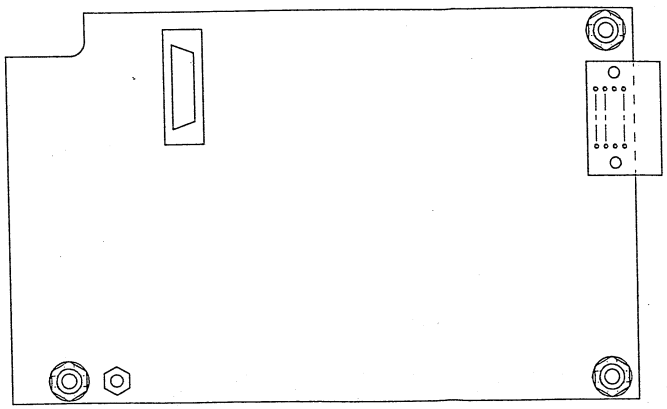

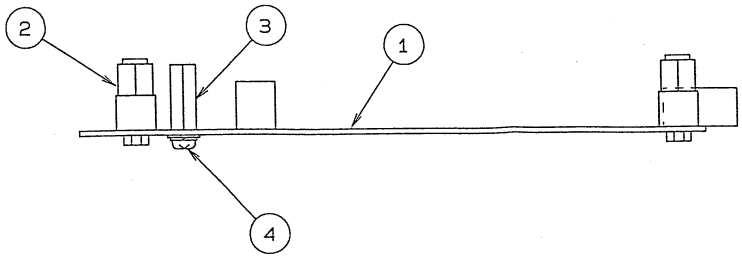

TITLE		DRAWING NO.
POWER BOARD ASSEMBLY		
MODEL NO. **HJ-500**	ASSEMBLY NO.	DATE

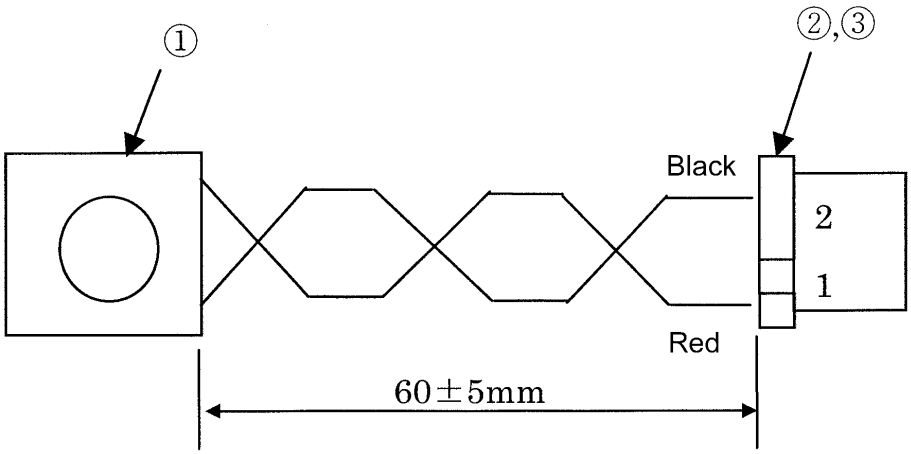

Note: Use the wires attached to the fan.
Connect the wires after stranding.

3	DF3-2428SCC	1F9539	2	
2	DF3-2S-2C	1F9384	1	
1	SE0525PFB2	1Y1146A	1	
Key No.	Description	Parts No.	Q'ty	

TITLE		DRAWING NO.
Fan Cable Assembly		**434－5528**
MODEL NO.	ASSEMBLY NO.	DATE
HJ-500		

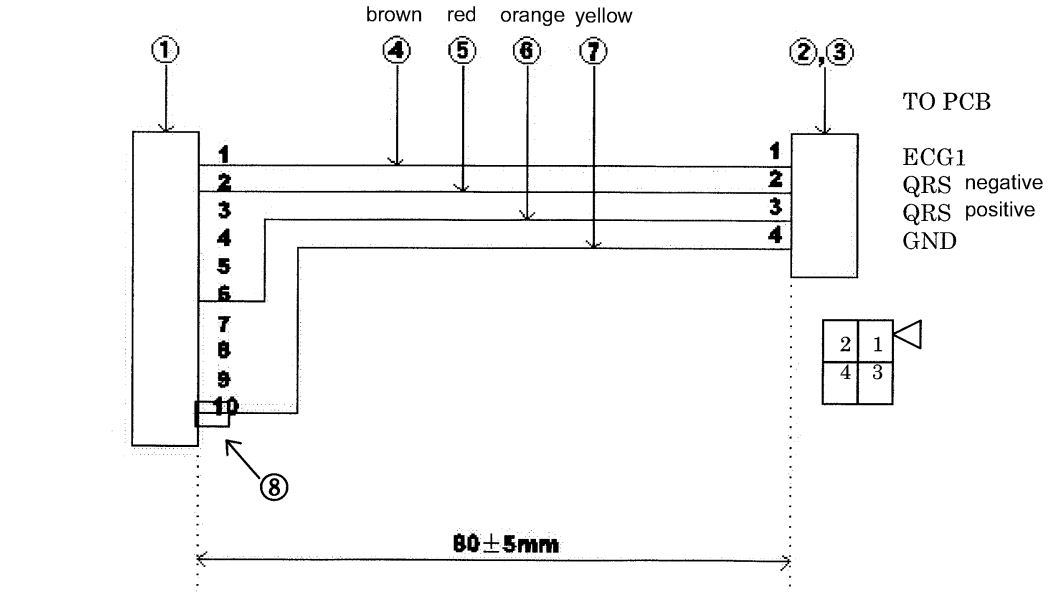

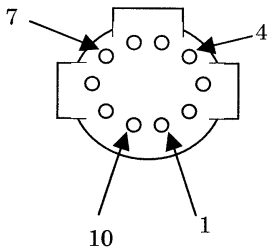

Note: Heat-treat product ⑧.
Solder products ④ to ⑦ to pins of product ①.

Key No.	Description	Parts No.	Q'ty	Remarks
8	ｽﾐﾁｭｰﾌﾞ F2　2×0.2	6G0151	4	L=5mm
4-7	AWG26（UL1007）	-	4	L=80mm
3	DF11-2428SCFA	1F9540	4	
2	DF11-4DS-2C	1F0344	1	
1	D0-121N-100	1F3928	1	

TITLE		DRAWING NO.
Analog Out Connector Cable Assembly		**324－4208**
MODEL NO.	ASSEMBLY NO.	DATE
HJ-500		

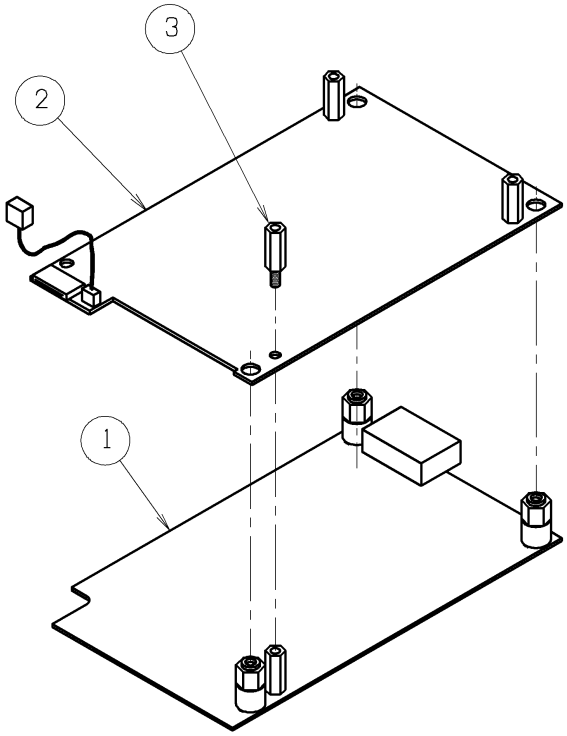

No.	Parts No.	Drawing No.	Description	Q'ty	
3	5T5561	714-0465	SYM2.6-13.0	1	
2	9G7109	684-3498	HJCPU Board	1	
1	9G7110	684-3499	HJ PWR Board	1	

TITLE		DRAWING NO.
PWB Assembly		**424－4246**
MODEL NO.	ASSEMBLY NO.	DATE
HJ-500		

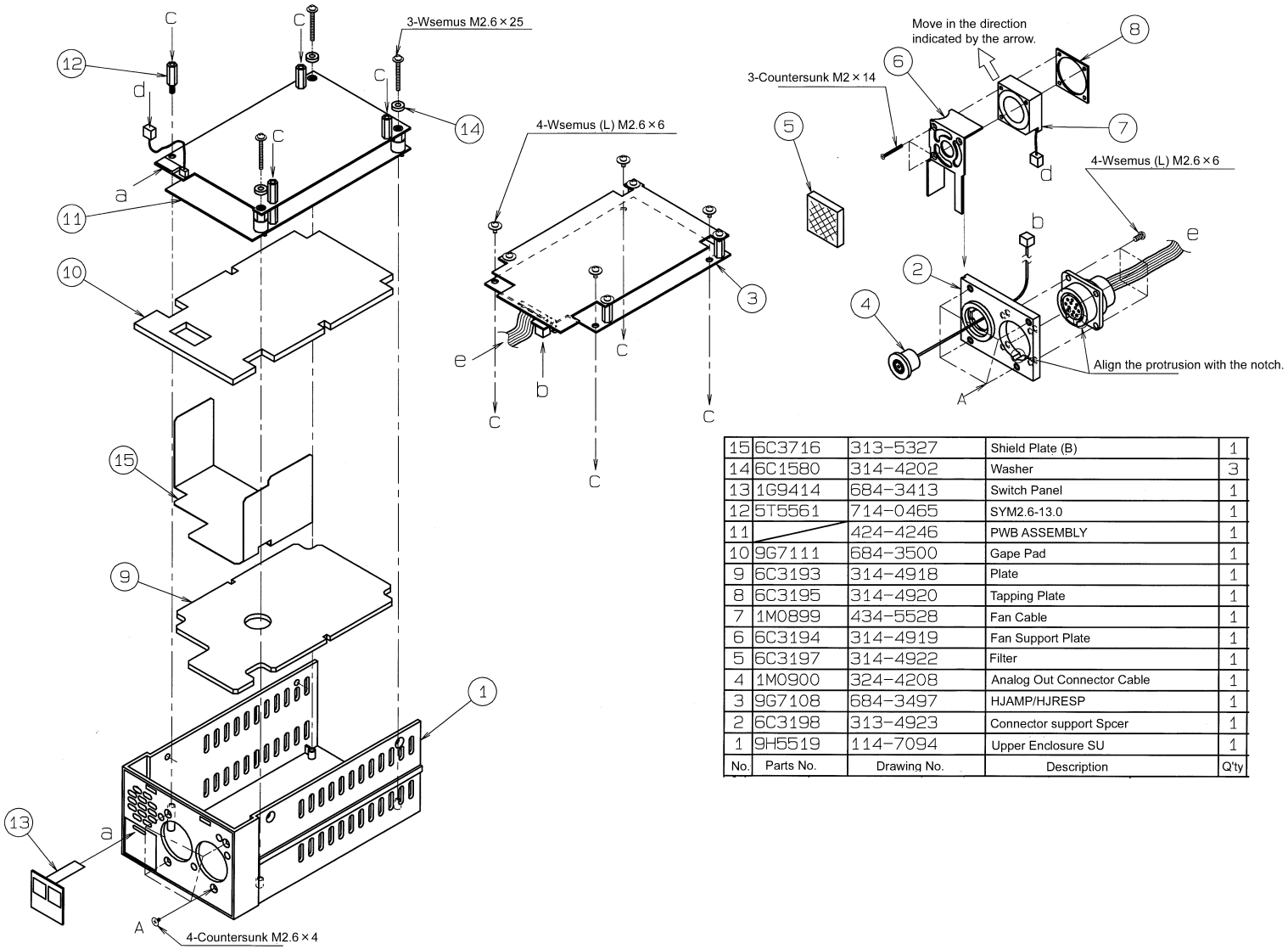

No.	Parts No.	Drawing No.	Description	Q'ty
15	6C3716	313-5327	Shield Plate (B)	1
14	6C1580	314-4202	Washer	3
13	1G9414	684-3413	Switch Panel	1
12	5T5561	714-0465	SYM2.6-13.0	1
11		424-4246	PWB ASSEMBLY	1
10	9G7111	684-3500	Gape Pad	1
9	6C3193	314-4918	Plate	1
8	6C3195	314-4920	Tapping Plate	1
7	1M0899	434-5528	Fan Cable	1
6	6C3194	314-4919	Fan Support Plate	1
5	6C3197	314-4922	Filter	1
4	1M0900	324-4208	Analog Out Connector Cable	1
3	9G7108	684-3497	HJAMP/HJRESP	1
2	6C3198	313-4923	Connector support Spcer	1
1	9H5519	114-7094	Upper Enclosure SU	1

TITLE		DRAWING NO.
GENERAL ASSEMBLY (1)		**423-4375**
MODEL NO. **HJ-500**	ASSEMBLY NO.	DATE

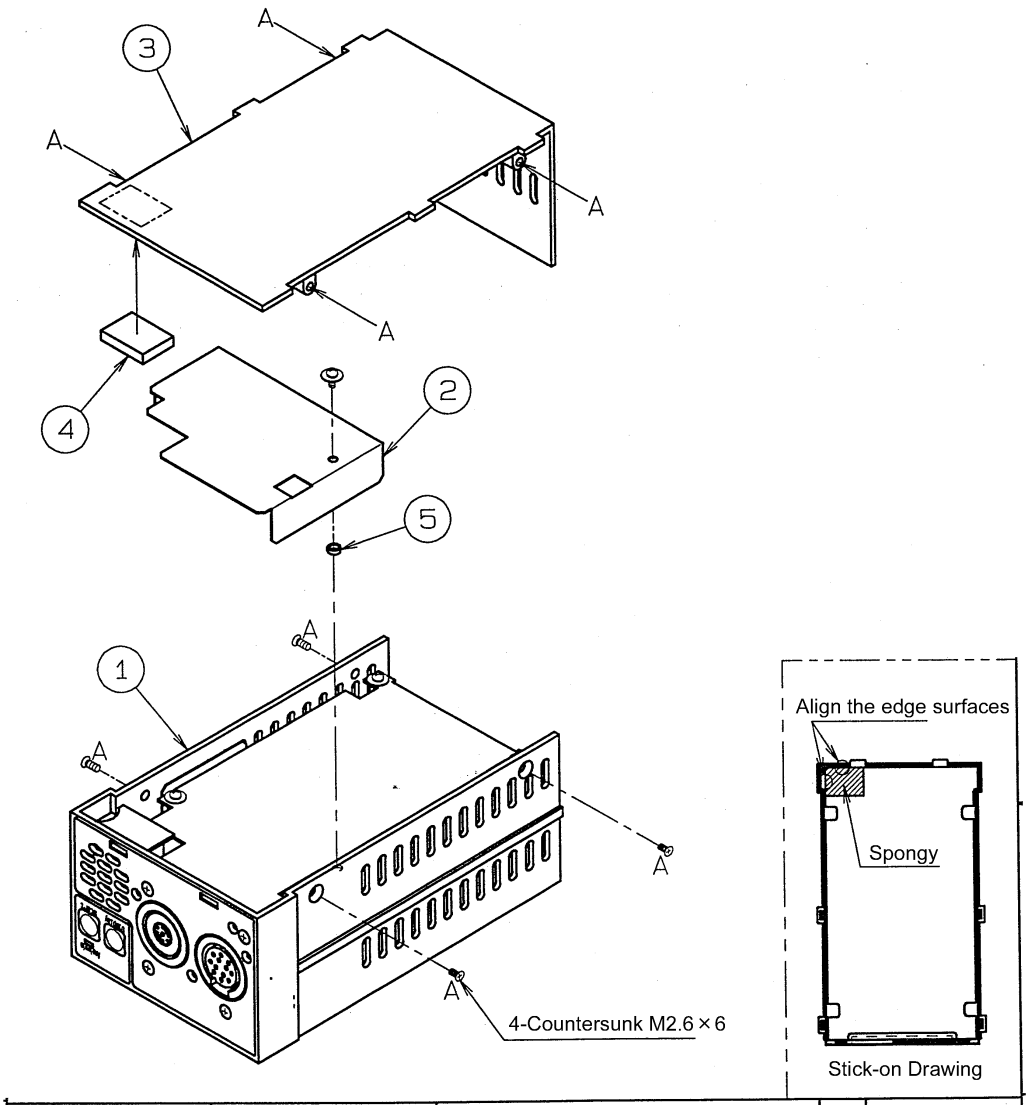

No.	Parts No.	Drawing No.	Description	Q'ty	
5	5T5053	714-0455	CL2.6-3-Bs	1	
4	6C3196	314-4921	Spongy	1	
3	9H3864A	112-6974	Lower Enclosure SU	1	
2	6C3715	313-5326	Shield Plate (A)	1	
1		423-4375	GENERAL ASSEMBLY (1)	1	

TITLE		DRAWING NO.
GENERAL ASSEMBLY (2)		**423－4376**
MODEL NO. **HJ-500**	ASSEMBLY NO.	DATE

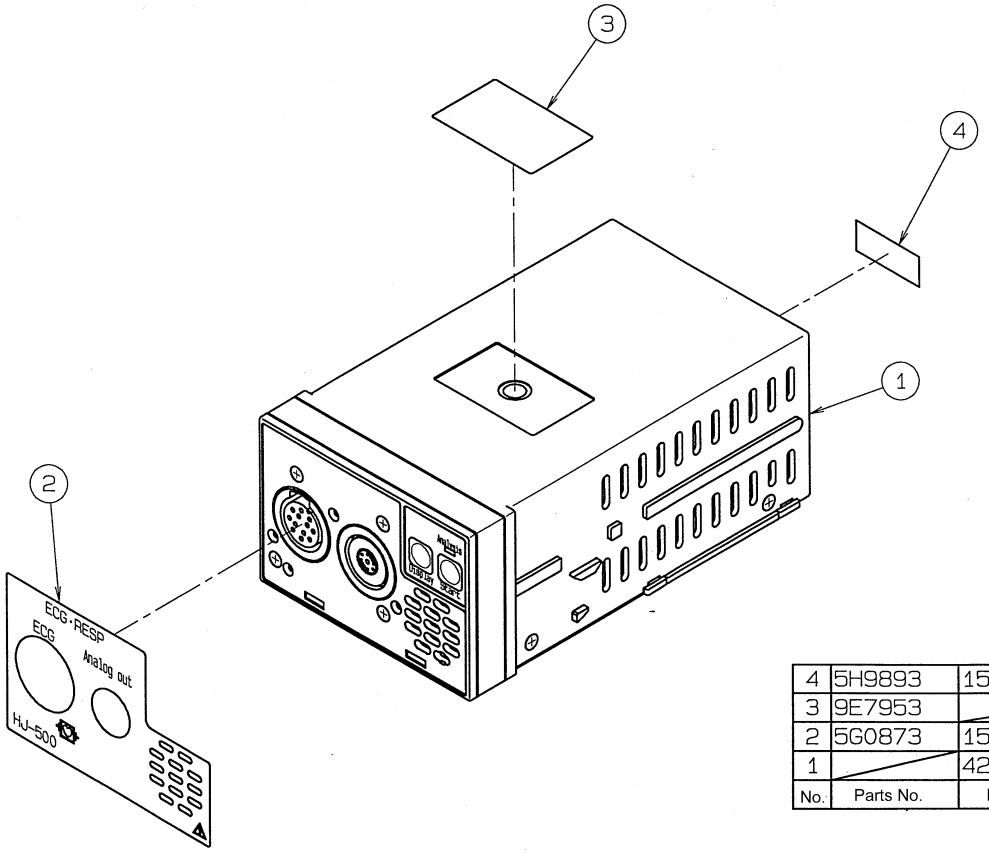

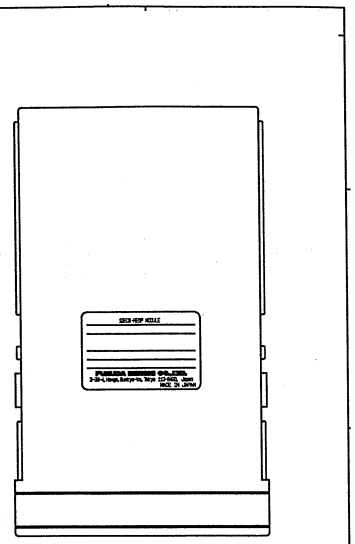

Rating Label positon

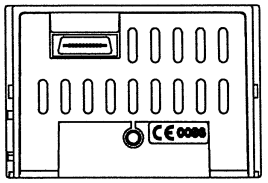

CE Mark Label positon

No.	Parts No.	Drawing No.	Description	Q'ty	
4	5H9893	154-5102	CE Mark	1	
3	9E7953		Rating Label	1	
2	5G0873	154-5243	Instruction Label Connector	1	
1		423-4375	GENERAL ASSEMBLY (1)	1	

TITLE		DRAWING NO.
GENERAL ASSEMBLY (3)		**423-4377**
MODEL NO. **HJ-500**	ASSEMBLY NO.	DATE

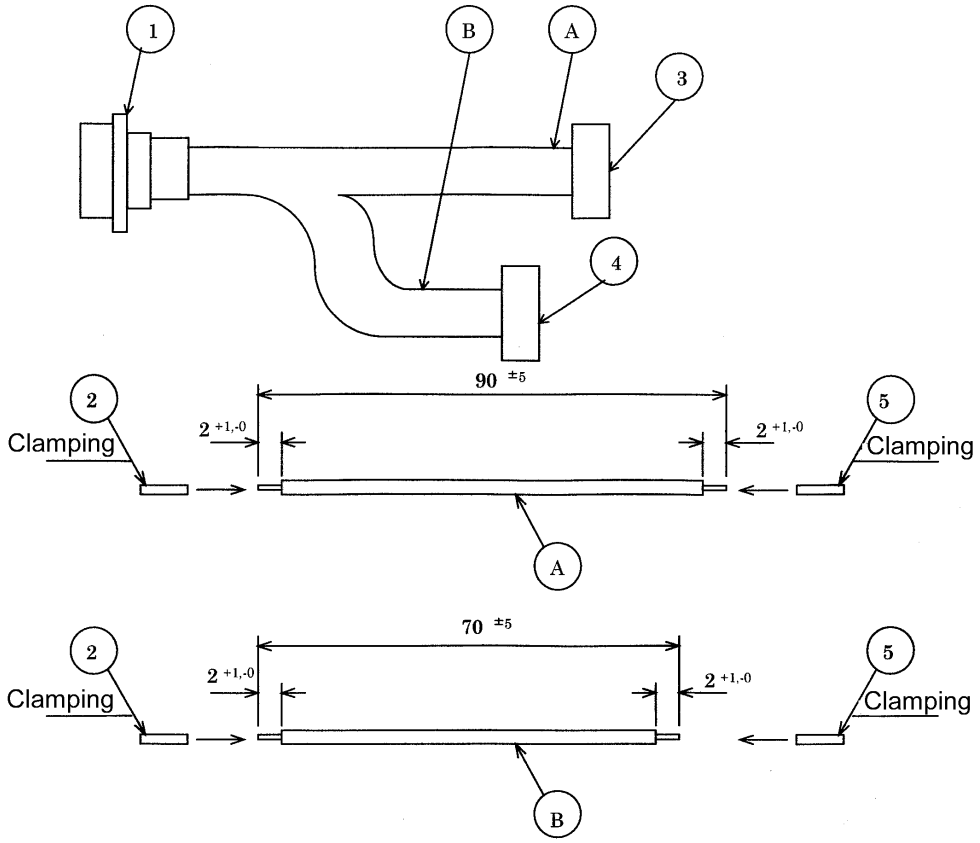

A

FLANSCHDOSE ①	A UL-1007 AWG28	DF3-9S-2C ③
1	Brown	1
2	Red	2
3	Orange	3
4	Yellow	4
5	Green	5
6	Blue	6
7	Purple	7
8	Gray	8
9	White	9

B

FLANSCHDOSE ①	B UL-1007 AWG28	DF3-8S-2C ④
11	Brown	1
12	Red	2
13	Orange	3
14	Yellow	4
15	Green	5
16	Blue	6
17	Purple	7
18	Gray	8

Key No	Parts No.		Description	Q'ty	
5	1F9539		DF3-2428SCC	17	
4	1F0763		DF3-8S-2C	1	
3	1F0777		DF3-9S-2C	1	
2	1F9630		Buchse 500 996	17	
1	1F4293		FLANSCHDOSE	1	

TITLE		DRAWING NO.
Input Connector Cable		**434－5505**
MODEL NO. **HC-530**	ASSEMBLY NO.	DATE

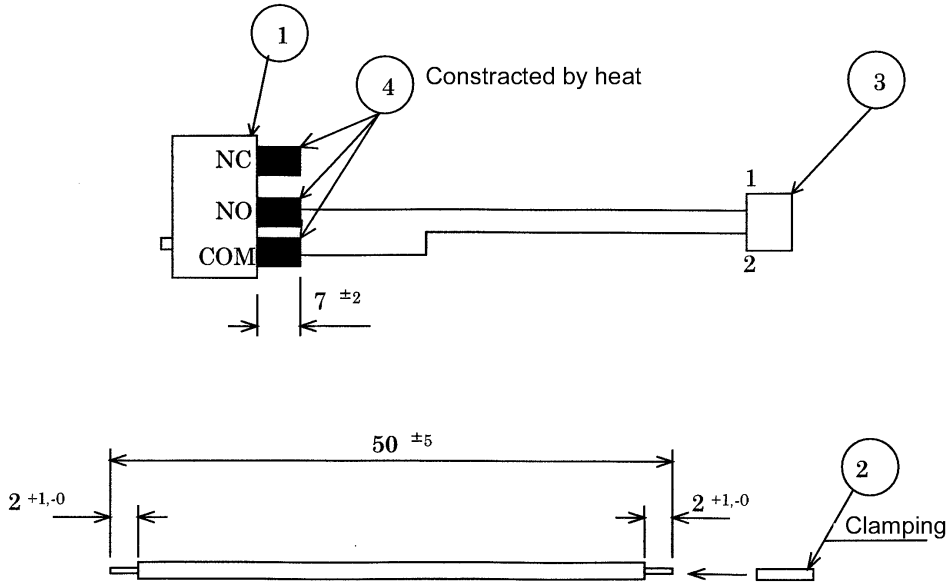

D2F-01 ①	Wire UL-1007 AWG28	DF3-2S-2C ③
COM	Black	2
NO	Red	1
NC	N.C	N.C

Key No.	Parts No.		Description	Q'ty	
4	6G0773		SUMITUBE F2 1.5X0.2	3	
3	1F9384		DF3-2S-2C	1	
2	1F9539		DF3-2428SCC	2	
1	1G8037		D2F-01	1	

TITLE		DRAWING NO.
Micro Switch Cable Assembly		**434－5506**
MODEL NO. **HC-530**	ASSEMBLY NO.	DATE

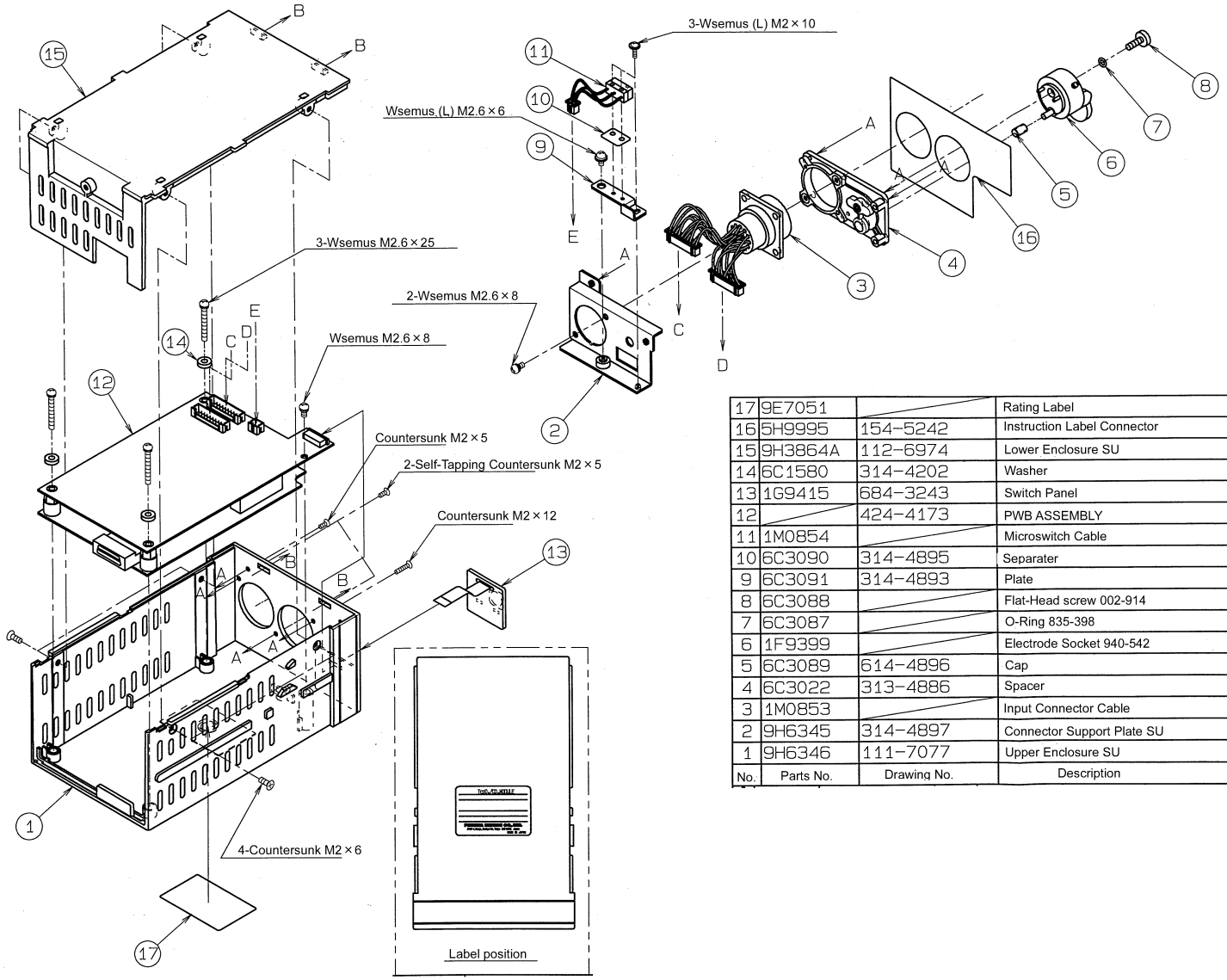

No.	Parts No.	Drawing No.	Description	Q'ty
17	9E7051		Rating Label	1
16	5H9995	154-5242	Instruction Label Connector	1
15	9H3864A	112-6974	Lower Enclosure SU	1
14	6C1580	314-4202	Washer	3
13	1G9415	684-3243	Switch Panel	1
12		424-4173	PWB ASSEMBLY	1
11	1M0854		Microswitch Cable	1
10	6C3090	314-4895	Separater	1
9	6C3091	314-4893	Plate	1
8	6C3088		Flat-Head screw 002-914	1
7	6C3087		O-Ring 835-398	1
6	1F9399		Electrode Socket 940-542	1
5	6C3089	614-4896	Cap	1
4	6C3022	313-4886	Spacer	1
3	1M0853		Input Connector Cable	1
2	9H6345	314-4897	Connector Support Plate SU	1
1	9H6346	111-7077	Upper Enclosure SU	1

TITLE		DRAWING NO.
GENERAL ASSEMBLY (1)		**423-4379**
MODEL NO. **HC-530**	ASSEMBLY NO.	DATE

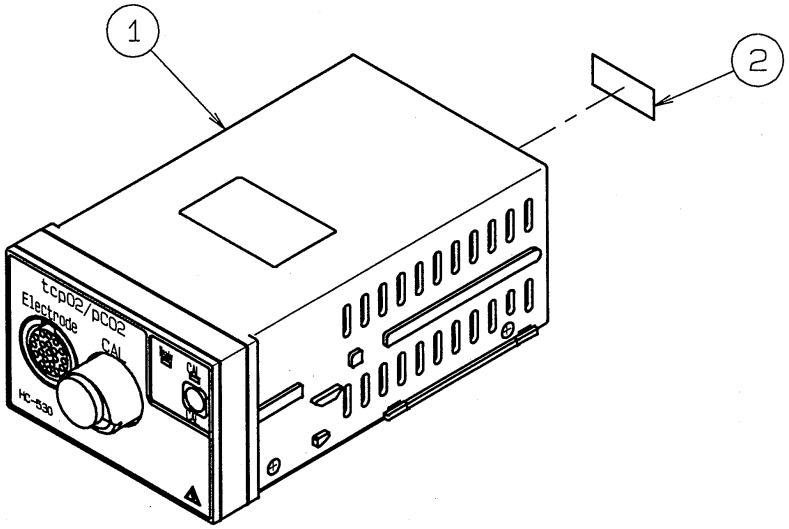

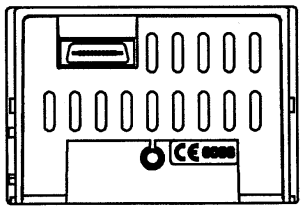

Label position

No.	Parts No.	Drawing No.	Description	Q'ty	
2	5H9893	154-5102	CE Mark	1	
1		423-4379	GENERAL ASSEMBLY (1)	1	

TITLE		DRAWING NO.
GENERAL ASSEMBLY (2)		**424−4380**
MODEL NO.	ASSEMBLY NO.	DATE
HC-530		

FUKUDA DENSHI CO.,LTD.

39-4, Hongo 3-chome, Bunkyo-ku, Tokyo, Japan
Phone:+81-3-3815-2121 Fax:+81-3-3814-1222

4R2099A 200604