FISHER & PAYKEL

FREESTANDING QUAD DOOR REFRIGERATOR FREEZER

CONTEMPORARY

RF730QZUVB1, RF730QNUVX1 & RF730QNUVB1 models

INSTALLATION GUIDE

NZ AU

CONTENTS

Safety and warnings	4
ActiveSmart™ Refrigerator	7
Unpacking and moving your appliance	8
Before installation	9
Supplied parts	10
Product dimensions	11
Cabinetry dimensions – Proud	13
Cabinetry dimensions – Flush	15
Electrical	17
Water connection	18
Water connection	19
Flushing the water filter	20
Positioning your refrigerator	21
Complete installation	23
Final checklist	24

Registration

To register your product visit our website: fisherpaykel.com/register

⚠ WARNING!	
	**Electric Shock Hazard** **Failure to follow this advise may result in death, electric shock, fire or injury to persons.** • Read and follow the safety and warnings outlined in this guide before operating this appliance.

⚠ WARNING!	
	**Risk of fire/flammable material** This refrigerator contains flammable refrigerant isobutane (R600a).

READ AND SAVE THIS GUIDE

Use this appliance only for the intended purpose as described in the user guide.

When using this appliance always exercise basic safety precautions including the following:

- Keep ventilation openings, in the appliance enclosure or the built-in structure, clear of obstruction.
- Do not damage the refrigerant circuit.
- In case of damage to the refrigerant circuit, ventilate the area by opening all windows. Do not operate electrical equipment or any other equipment that may produce arcs, sparks or flames in the area. Contact your Fisher & Paykel trained and supported service technician immediately to arrange for the appliance to be repaired.
- It is hazardous for anyone other than a Fisher & Paykel trained and supported service technician to service this appliance.
- In Queensland the authorised service person must hold a gas work licence or authorisation for hydrocarbon refrigerants to carry out service or repairs which involve removal of covers.
- Your refrigerator is designed to operate for many years without the need for service checks. However, if your refrigerator is malfunctioning, have it attended to by your Fisher & Paykel trained and supported service technician as soon as possible. All electrical repairs must be carried out by an adequately trained service technician or qualified electrician.
- This refrigerating appliance is not intended to be used as a built-in appliance.
- It is hazardous for anyone other than a Fisher & Paykel trained and supported service technician to service this appliance.
- This refrigerating appliance performs optimally at ambient temperatures ranging from 16°C to 38°C.

Electrical

- This appliance must be installed in accordance with the installation instructions before use.
- To allow disconnection of the appliance from the supply after installation, incorporate a switch in the fixed wiring in accordance with the wiring rules.
- Never unplug your refrigerator by pulling on the power cord. Always grip the plug firmly and pull straight out from the outlet.
- Do not plug in any other appliance at the same power point as your refrigerator or use extension cords or double adapters.
- Repair or replace immediately all electric service cords that have become frayed or otherwise damaged. Do not use a cord that shows cracks or abrasion along its length or at either the plug or appliance end.
- If the power supply cord is damaged, it must only be replaced by your Fisher & Paykel trained and supported service technician because special purpose tools are required.
- When moving your appliance away from the wall, be careful not to roll over or damage the power cord.
- Do not use electrical appliances inside the food storage compartments of the appliance, unless they are of the type recommended by the manufacturer.
- When positioning the appliance, ensure the power cord is not trapped or damaged.
- Do not locate multiple portable socket-outlets or portable power supplies at the rear of the appliance.

Water filter

- To reduce the risk associated with choking:
  - DO NOT allow children under 3 years of age to have access to small parts during the installation of the water filter.
- The water connection to your Ice & water refrigerator must be installed by a qualified plumber or Fisher & Paykel trained and supported service technician and comply with all state and local laws.
- Installation and use MUST comply with all state and local plumbing codes. Check with your local public works department for plumbing codes. You must follow their guidelines as you install the water filtration system.
- To avoid serious illness or death, only connect your water filter to safe drinking water.
- The water filter cartridge needs to be changed when the replacement indicator icon illuminates. This will happen every 6 months.
- If the water filtration system has been allowed to freeze, replace filter cartridge. Failure to replace the disposable filter at recommended intervals may lead to reduced filter performance and failure of the filter, causing property damage from water leakage or flooding.
- When installing the product use new tubing supplied with the refrigerator, DO NOT reuse any existing water connections.
- The water system is designed to operate between 138–827kPa (20–120psi). DO NOT install if water pressure exceeds 827kPa (120psi).
- To reduce the risk associated with property damage due to water leakage or flooding:
  - DO NOT install systems in areas where ambient temperatures may go above 38°C or drop below 0.6°C.
  - DO NOT install on hot water supply lines. The water filter system is designed with a maximum inlet temperature of 38°C.
  - DO NOT install where water hammer conditions may occur. If water hammer conditions exist, you must install a water hammer arrester.
- **To avoid serious illness or death, only connect your water filter to safe drinking water.**

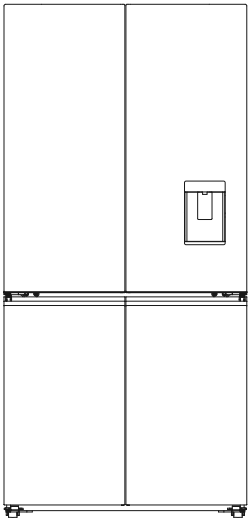

Quad Door Fridge Freezer, 905mm, 690L, Ice & Water
Contemporary
RF730QZUVB1, RF730QNUVX1 & RF730QNUVB1 models

UNPACKING AND MOVING YOUR APPLIANCE

Check that your appliance is the correct model as per your order.

Follow the steps below to move your appliance to the install location. Be careful when tilting the appliance forward/backward. Tape the door shut to prevent opening while moving the appliance.

1

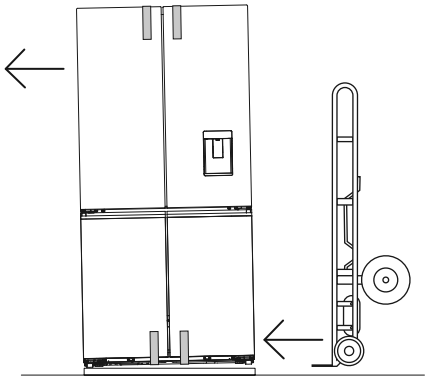

Tilt the appliance slightly forward and Insert the hand truck between the plastic base and appliance (at the right hand side when viewed from the front).

2

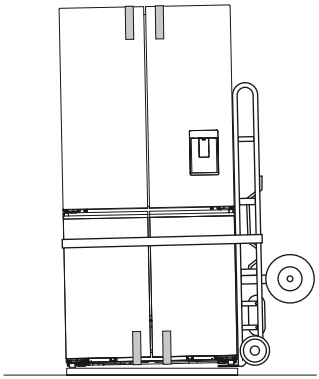

Restrain the appliance with a strap.

3

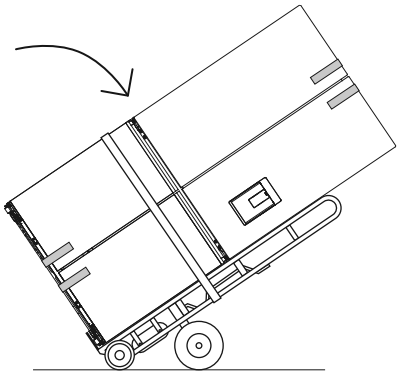

Tilt backward to load appliance onto hand truck and push to install location.

Please follow the installation steps below to ensure your appliance operates correctly.

Before installation

Power

- Install your appliance where the plug is easily accessible.
- Connect your refrigerator to a separate power point. Avoid sharing the power point with other appliances. Do not use extension cords and double adaptors as the combined weight of two power cords can pull the double adaptor from the power outlet.
- For power requirements, refer to the information on the serial plate located at the front bottom right-hand side of the refrigerator when the door is open.
- Ensure your appliance is properly grounded (earthed).
- Connect the appliance to the electrical supply (220V – 240V 50Hz) with the fitted plug and lead.
- Connections to the mains supply should be in accordance with local regulations.

Ice & Water models

- Your Ice & Water refrigerator must be installed by a qualified plumber or Fisher & Paykel trained and supported service technician as incorrect plumbing can lead to water leaks.
- Fisher & Paykel Appliances does not accept responsibility for damage (including water damage) caused by faulty installation or plumbing.

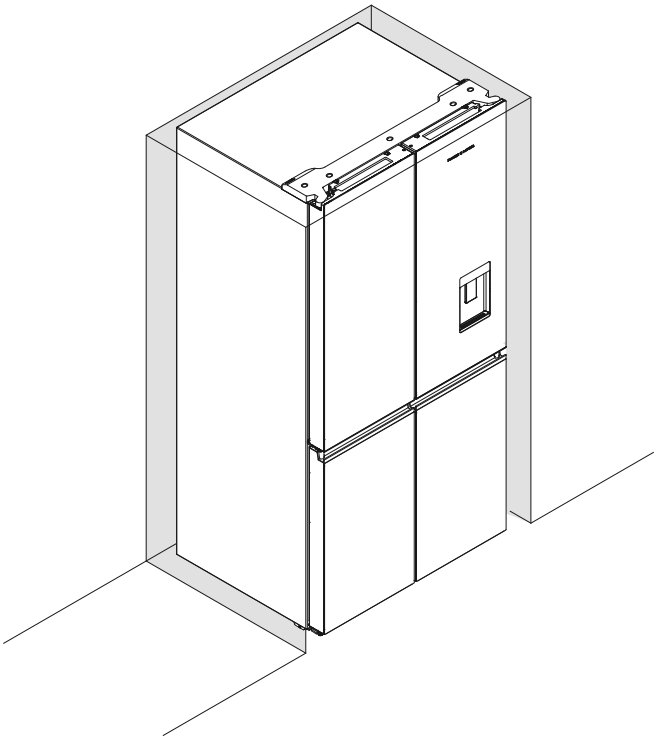

MISCELLANEOUS ITEMS PACK



User/Installation guide (1)

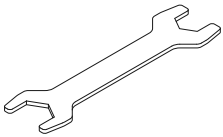

Spanner (1)

WATER FILTER KIT

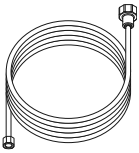

Water hose + connectors (1)

PRODUCT DIMENSIONS

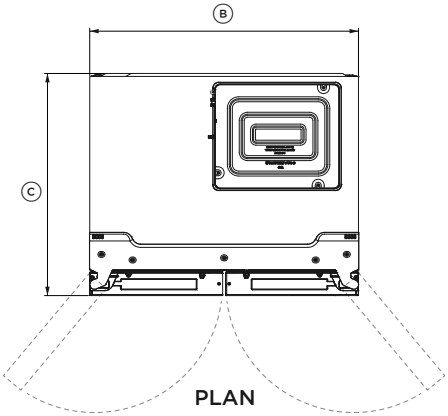

PLAN

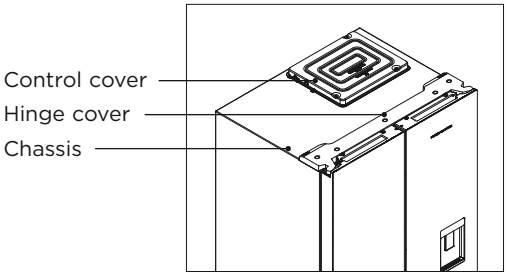

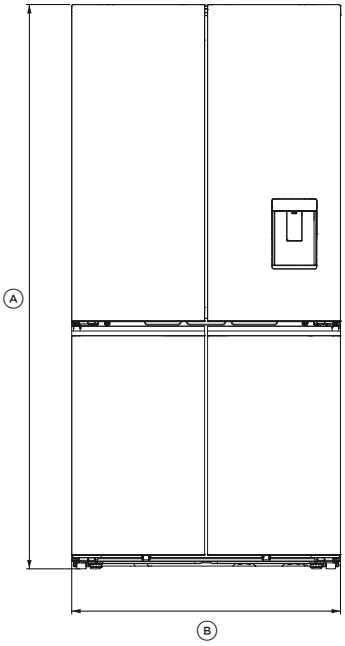

FRONT

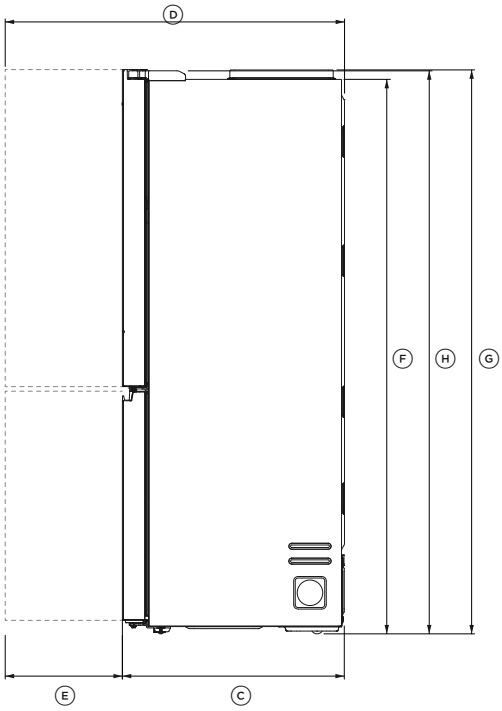

PROFILE

PRODUCT DIMENSIONS

PRODUCT DIMENSIONS	MM
Ⓐ Overall height of product	1900
Ⓑ Overall width of product	905
Ⓒ Overall depth of product (excludes handle)	748
Ⓓ Depth with door open – from rear of fridge – 90° rotation	1142
Ⓔ Depth with door open – from flush with door – 90° rotation	394
Ⓕ Height to top of chassis	1867
Ⓖ Height to top of hinge cover	1896
Ⓗ Height to top of control cover	1899

Actual product dimensions may vary by ± 2 mm

CABINETRY DIMENSIONS – PROUD

CUTOUT

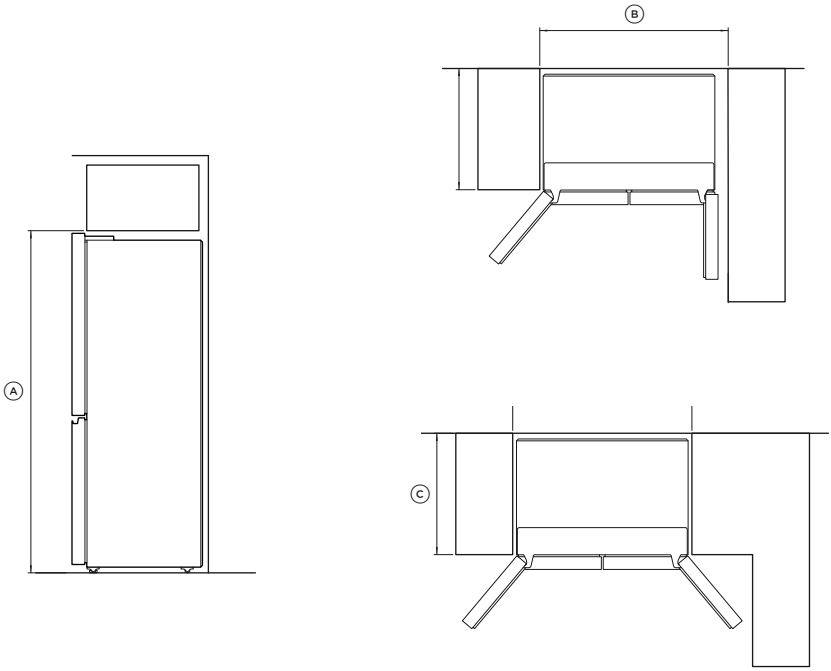

CABINETRY DIMENSIONS (incl. minimum air clearances)	RF730Q MM
Ⓐ Inside height of cavity*	1920
Ⓑ Inside width	
• 90° rotation**	985
• full rotation	945
Ⓒ Overall depth	690

*Measurement includes a feet increase of 10mm.

**For full drawer/shelf access, the doors need to be open past 90°. To avoid damaging the product ensure doors do not contact the adjacent cabinetry/wall.

CLEARANCES

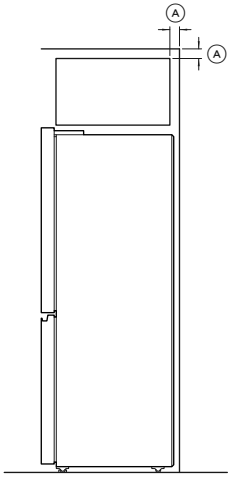

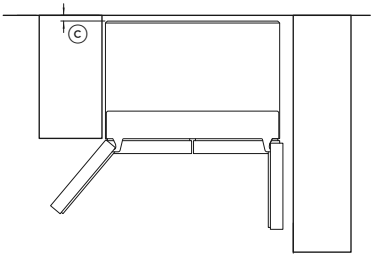

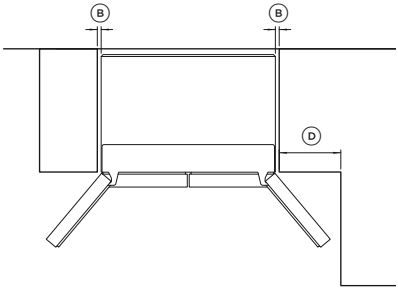

MINIMUM CLEARANCE DIMENSIONS	RF730Q MM
Ⓐ Vent (above refrigerator cabinet or around top of cupboard)	50
Ⓑ Side clearance	
• 90° rotation*	60
• full rotation	20
Ⓒ Rear clearance	30
Ⓓ Door clearance	
• 90° rotation*	N/A
• full rotation	350

*For full drawer/shelf access, the doors need to be open past 90°. To avoid damaging the product ensure doors do not contact the adjacent cabinetry/wall.

CABINETRY DIMENSIONS – FLUSH

CUTOUT

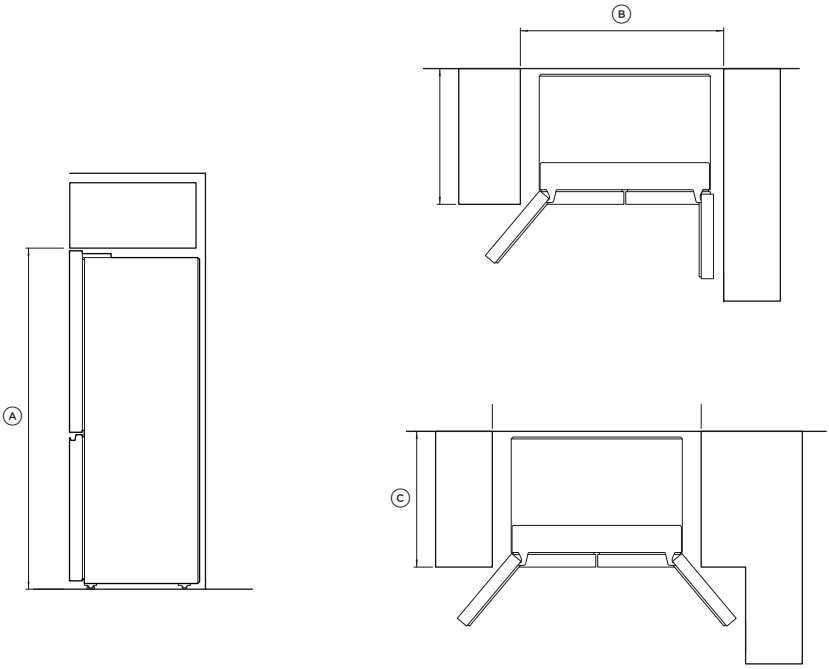

CABINETRY DIMENSIONS (incl. minimum air clearances)	RF730Q MM
Ⓐ Inside height of cavity*	1945
Ⓑ Inside width	
• 90° rotation**	1075
• full rotation	1125
Ⓒ Inside depth	778

*Measurement includes a feet increase of 10mm.

**For full drawer/shelf access, the doors need to be open past 90°. To avoid damaging the product ensure doors do not contact the adjacent cabinetry/wall.

CLEARANCES

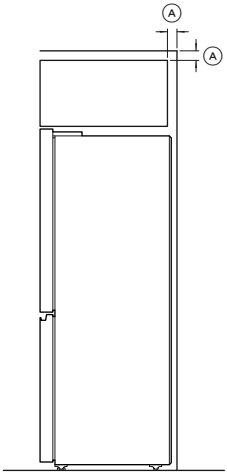

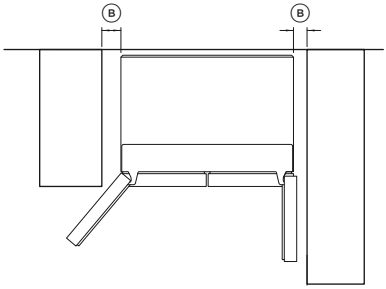

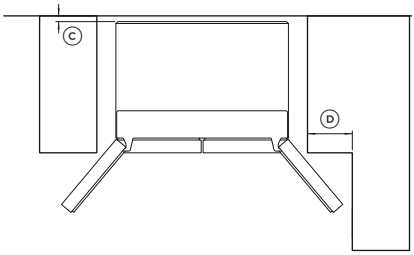

MINIMUM CLEARANCE DIMENSIONS	RF730Q MM
Ⓐ Vent (above refrigerator cabinet or around top of cupboard)	50
Ⓑ Side clearance	
• 90° rotation*	60
• full rotation	110
Ⓒ Rear clearance	30
Ⓓ Door clearance	
• 90° rotation*	N/A
• full rotation	260

*For full drawer/shelf access, the doors need to be open past 90°. To avoid damaging the product ensure doors do not contact the adjacent cabinetry/wall.

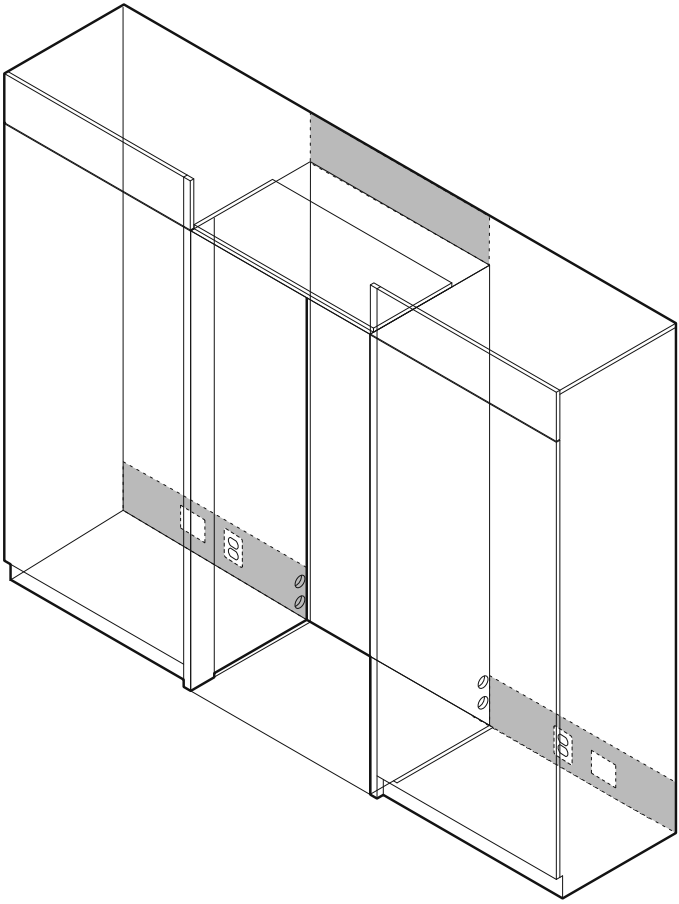

Electrical connection should be located in an adjacent cabinet to either side of the refrigerator or above the refrigerator cavity. We recommend the use of an isolating switch that is easily accessible to the user after the refrigerator is installed.

WATER CONNECTION

1

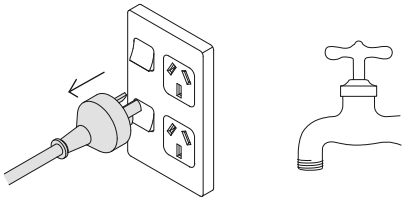

Ensure the refrigerator is not plugged into a power supply.

Locate the isolation tap for cold water connection (tee and tap fitting not supplied).

2

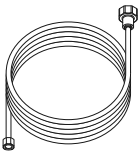

Locate the water hose set to complete the water connection installation.

3

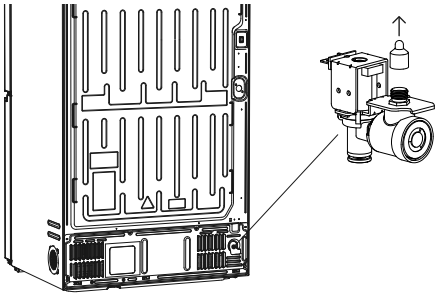

Remove cap from water inlet valve at the back of the refrigerator.

4

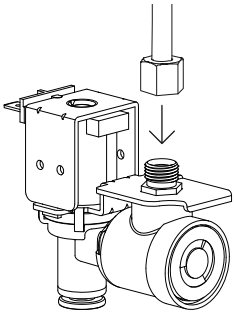

Connect one end of the water hose set to the water inlet valve.

5

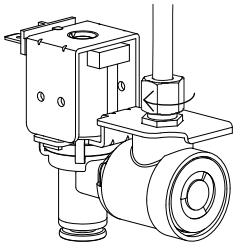

Tighten the compression nut until it is hand tight, then tighten one additional turn with a spanner.

6

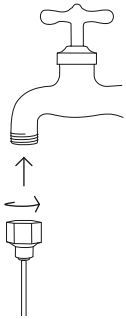

Fasten the water tap adaptor to the isolation tap. Take care not to overtighten.

7

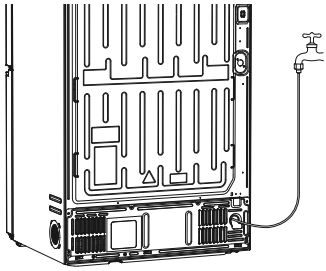

Check the connections, turn on the water supply and check for leaks.

FLUSHING THE WATER FILTER

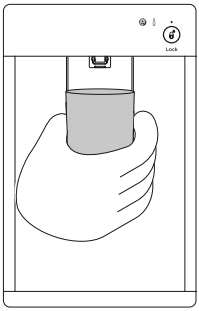

① Press the water dispenser pad to dispense 4L of water. Wait for four minutes before dispensing again.

② Dispense 4L of water and then wait for another four minutes. There may be carbon residue dispensed together with water. This is not harmful, and is normal during the flushing process.

③ Dispense another 4L of water. This prevents excessive dripping of water from your dispenser.

There may be a few drips of water coming out of the dispenser for a few days after installation. This is normal and occurs as the remaining trapped air is cleared from the system. Ensure your refrigerator has cooled for at least 2 hours before use.

POSITIONING YOUR REFRIGERATOR

Your Fisher & Paykel ActiveSmart™ refrigerator is fitted with front and rear rollers to allow you to easily move your refrigerator forward and backward. Avoid moving your refrigerator sideways to prevent damaging the rollers or the floor covering surface.

Your refrigerator will arrive with the front feet wound up to assist with moving the product into its final location.

1

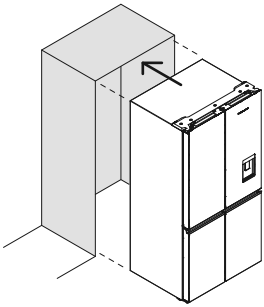

Roll the refrigerator into its final position ensuring there is the correct air gap between the product and surrounding cabinetry. See minimum clearance in cabinetry dimensions table.

2

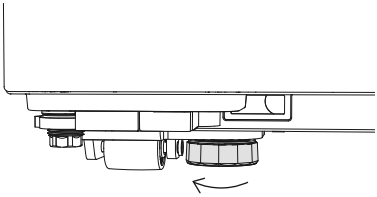

Adjust the front feet down until the refrigerator is leaning backward with the front approximately 10mm higher than the back. This will ensure a good door closing action.

Levelling of refrigerator doors

3

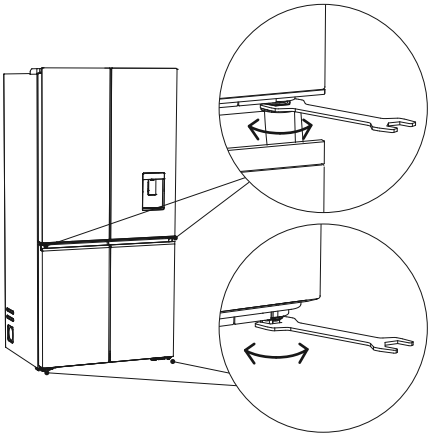

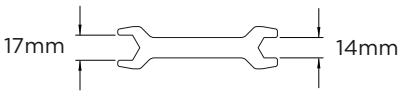

Using the spanner provided, turn the hinge anti-clockwise to lift the door or clockwise to drop the door.

The larger end of the spanner is for use on the bottom of the upper doors (centre hinges).

After adjustment on bottom hinges, ensure there is clearance between lower doors and centre hinge and doors swing freely.

What to do if your product is unstable

1

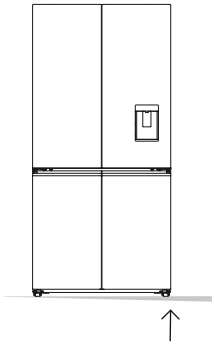

Gently push the refrigerator back until the rear rollers contact the floor.

Measure the gap under the front foot, which has come off the floor.

Obtain some solid packing material (hardwood, plastic, etc) which fits firmly into the gap under the foot.

2

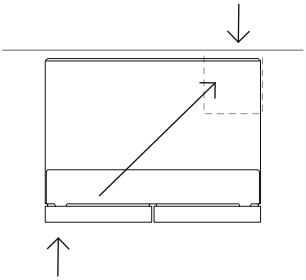

Wind both front feet up and roll the product out of position.

Place the packing material in the location diagonally opposite the front roller that lifts off the floor.

Ensure the packing material stays in place when the product is pushed back into position.

3

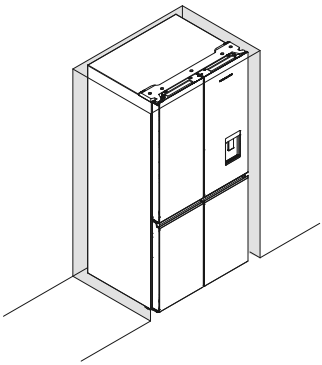

Roll the refrigerator back into position and adjust front feet. Check alignment and door closing action are satifactory. Make small adjustments to the front feet where necessary.

Before placing food in the fridge or freezer compartments

- Remove all internal packaging. Ensure that all transit clips are removed from the refrigerator. These are small rubber stoppers located at the back of the shelves.
- Clean the inside of the appliance with a mix of warm water and a small amount of liquid detergent. Use a soft cloth to remove dust collected during manufacture and transport.
- Allow the refrigerator and freezer to run empty for 2 – 3 hours to allow each compartment to cool to the appropriate temperature.
- The appliance may have an odour on its initial operation, this will go when the refrigerator and freezer have cooled sufficiently.

FINAL CHECKLIST

TO BE COMPLETED BY THE INSTALLER

Ensure that:

- ☐ Check all parts are installed.
- ☐ Ensure the appliance is level.
- ☐ Ensure all internal and external packaging is removed from the appliance before use.
- ☐ Ensure the water filter is installed and has been flushed.

Complete and keep for safe reference:

Model _____

Serial No. _____

Purchase Date _____

Purchaser _____

Dealer Address _____

Installer's Name _____

Installer's Signature _____

Installation Company _____

Installation Date _____

FISHERPAYKEL.COM

© Fisher & Paykel Appliances 2022. All rights reserved.

The models shown in this guide may not be available in all markets and are subject to change at any time.

The product specifications in this guide apply to the specific products and models described at the date of issue. Under our policy of continuous product improvement, these specifications may change at any time.

For current details about model and specification availability in your country, please go to our website or contact your local Fisher & Paykel dealer.

431084A 10.22