FloTech™ Overfill Detection System



Product instruction sheets and technical data can be viewed on our website at dixonvalve.com

Fuel Tanker Overfill Detection

FloTech™ Overfill Detection Products

Application:	The overfill detection system used on petroleum cargo tanks typically consists of a sensor mounted in each tank compartment, an onboard monitor located near the bottom loading valves and an API compatible socket. The overfill system is intended to detect a pending overfill condition inside the cargo tank compartment and signal the loading rack to close the fuel supply control valve, to prevent a spill of product. These systems are required by law as part of the bottom loading system and considered a secondary emergency shut off device. The overfill system is typically triggered when the primary metering system fails to load the cargo tank compartment with the correct volume of product.
Standards:	Manufactured to American Petroleum Institute standard API RP-1004, which allows for drop in interchange ability with other brands.
Materials:	Dependent upon the component, see each product section for materials.
Features & Benefits:	• Knowledge and experienced design: Dixon™ electronic staff are seasoned veterans when it comes to overfill systems. Our employees have years of experience in electronics, manufacturing and most important, with in-the-field trouble shooting of overfill terminal and tanker installations. That is why we have focused on easy, drop-in replacement features with improved probe life, and why we have included heavy duty hardware made from premium, corrosion resistant materials. • Trouble free probes and sensors: FloTech™ brand probes/sensors do not use epoxy bonded prisms as a means to seal the prism. Therefore, they are not subject to malfunction due to epoxy/prism interface separation. FloTech™ brand probes/sensors incorporate a double elastomer design whichseals and secures the sensitive optic prism tip. The elastomer seals are flexible allowing thermal expansion and resistance to steam cleaning and petroleum chemical attack. 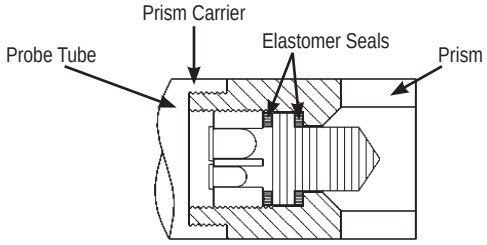 • "Best in Class" technical support: Our goal is to provide the most reliable overfill components and system available on the market today. Over the years the FloTech™ brand has earned a reputation for reliable overfill components compatible with other common systems. Don't take our word on this; ask one of our many customers! • Easy Installation: FloTech™ brand items are shipped with easy to follow installation instructions and manuals (also available online at dixonvalve.com under the Resources menu, select Petroleum and Dry bulk products). If you need a little extra help call our North American toll free technical service hot line at 877.582.3569 (or from other parts of the world, dial 001-513-874-8499). In fact, call us with any overfill system questions (regardless of the brand) and we will work with you to help solve the problem. FloTech™ brand components are manufactured to be installed easily, even on other systems. We designed them to be drop-in compatible with API systems being used around the world. • Products in stock, delivered on time: FloTech™ brand products are stocked at Dixon™ locations throughout the world. Most orders can be processed and delivered within 24 hours. We know that downtime costs you money so we do everything we can to ensure you receive your parts when you need them. • A great product with an unparalleled warranty: FloTech™ brand products are covered by a five year limited warranty. The warranty is part of the total system that makes FloTech™ overfill detection the best choice for you operation. See limited warranty on page 169 for details. • Biofuel compatible: up to E100 (100% Ethanol) and B100 (100% Bio Diesel). For detailed fuel compatibility, please refer to the chart shown on page 4.

Customer Support
877.582.3569

Product instruction sheets and technical data can be viewed on our website at dixonvalve.com

Biofuel Compatible, see fuel compatibility chart on page 4 for more information.

Fuel Tanker Overfill Detection

FloTech™ Checkmate Overfill/Retain Plug-n-Play System

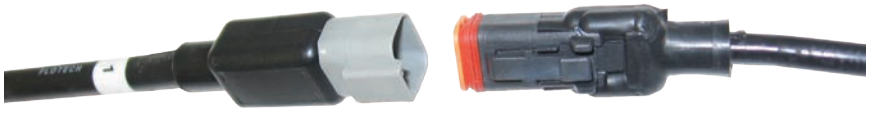

Application:	The reason for many overfill system breakdowns is failed or poor wiring connections. The required amperage within the overfill system is so low that any poorly wired or corroded wiring connections tend to fail (the low current cannot pass through corrosion or poor connections). To remove the possibility of wiring system problems, Dixon™ has introduced the FloTech™ Plug-n-Play system, all the wire connections are prewired and tested at the factory using high quality weather proof cables and plugs. Plug-n-Play system installation takes a fraction of the time to install when compared to conventional systems, just mount all the components and simply plug them all together.
Standards:	Manufactured to American Petroleum Institute standard API RP-1004, which allows for interchangeability.
Materials:	Dependent upon the component, see each product section for materials
Features & Benefits:	• Prewired cables and plugs on sensors, wiring harness', onboard monitor and sockets, make it simple to install our Plug-n-Play system in much less time than conventional systems. • Secure and weather tight connections all the time remove the possibility of poor wiring connections. Sealed connectors pass IP67 and DIN40050 salt spray tests. • Easy installation: literally Plug-n-Play, just mount the components and plug them all together. • Biofuel compatible up to E100 (100% Ethanol) and B100 (100% bio diesel)

Monitors with Integrated Dual Sockets



Features and Benefits:
- Integrated Optic and Thermistor dual sockets with onboard monitor all in one aluminum case
- Takes less space than utilizing separate sockets and monitor
- Prewired and factory tested with Plug-n-Play cabling and plugs, eliminates hours of manual crimped wire connections and removes the problems and worries associated with connection problems.
- Includes water-tight integrated fuse holder, all stainless steel hardware and terminal blocks prevent corrosion
- Built-in configurable high current relay output for pump or signal control
- Color coded display shows well on trailers
- Sockets come standard with Flotech™ unique guaranteed for life stainless steel wear rings.

Available Integrated Options:
- Top (overfill) only monitoring, or both top (overfill) and bottom (retain) monitoring
- Pre-wired ground bolt
- Pre-wired pressure sensor which can be used to interlock brakes or vapor vents
- Pre-wired TIM module
- Pre-wired dual male pin power cord

Product instruction sheets and technical data can be viewed on our website at dixonvalve.com

Biofuel Compatible

Fuel Tanker Overfill Detection

FloTech™ Checkmate Overfill/Retain Plug-n-Play System Monitors with Integrated Dual Sockets (continued)



Part #	Plug-n-Play Connections		Available Accessories Installed					Sockets	
	Top Overfill Detection	Bottom Retain Detection	Ground Bolt	Pressure Sensor Switch	TIM Module	Dual Male Pin - Power Cord	Stainless Steel 'Guaranteed for Life' Wear Rings	Optic	Thermistor
FT208-390P	Yes	No	No	No	No	No	Standard	6 contact pins, 3 "J" slots	10 contact pins, 4 "J" slots
FT208-390PG	Yes	No	Yes	No	No	No	Standard		
FT208-390PGS	Yes	No	Yes	Yes	No	No	Standard		
FT208-390PGST	Yes	No	Yes	Yes	Yes	No	Standard		
FT208-390PGT	Yes	No	Yes	No	Yes	No	Standard		
FT208-390PGSO	Yes	No	Yes	Yes	No	Yes	Standard		
FT208-390PGSTO	Yes	No	Yes	Yes	Yes	Yes	Standard		
FT208-390PP	Yes	Yes	No	No	No	No	Standard		
FT208-390PPG	Yes	Yes	Yes	No	No	No	Standard		
FT208-390PPGS	Yes	Yes	Yes	Yes	No	No	Standard		
FT208-390PPGST	Yes	Yes	Yes	Yes	Yes	No	Standard		
FT208-390PPGT	Yes	Yes	Yes	No	Yes	No	Standard		
FT208-390PPGSO	Yes	Yes	Yes	Yes	No	Yes	Standard		
FT208-390PPGSTO	Yes	Yes	Yes	Yes	Yes	Yes	Standard		
FT208-391P	Yes	No	No	No	No	No	Standard	6 contact pins, 4 "J" slots	10 contact pins 4 "J" slots
FT208-391PG	Yes	No	Yes	No	No	No	Standard		
FT208-391PGS	Yes	No	Yes	Yes	No	No	Standard		
FT208-391PGST	Yes	No	Yes	Yes	Yes	No	Standard		
FT208-391PGT	Yes	No	Yes	No	Yes	No	Standard		
FT208-391PP	Yes	Yes	No	No	No	No	Standard		
FT208-391PPG	Yes	Yes	Yes	No	No	No	Standard		
FT208-391PPGS	Yes	Yes	Yes	Yes	No	No	Standard		
FT208-391PPGST	Yes	Yes	Yes	Yes	Yes	No	Standard		
FT208-391PPGT	Yes	Yes	Yes	No	Yes	No	Standard		

See pages 129 and 130 for repair kits and replacement parts.

Product instruction sheets and technical data can be viewed on our website at dixonvalve.com

Biofuel Compatible

Fuel Tanker Overfill Detection

FloTech™ Checkmate Overfill/Retain Plug-n-Play System Stand Alone Monitors



Features and Benefits:
- Prewired and factory tested with Plug-n-Play cabling and plugs, eliminates hours of manual crimped wire connections, and removes the problems and worries associated with connection problems.
- Includes water-tight integrated fuse holder, all stainless steel hardware and terminal block within the aluminum housing.
- High tech color coded display shows well on trailers
- Monitors include advanced diagnostic capabilities as well as signal translation abilities for all socket types (optic, thermistor or float). The system offers true load at any rack compatibility.

Available Integrated Options:
- Top (overfill) only monitoring, or both top (overfill) and bottom (retain) monitoring

Part #	Description
FT208P	Checkmate monitor with Plug-n-Play connectors, top overfill protection only
FT208PP	Checkmate monitor with Plug-n-Play connectors, top overfill and bottom retain detection
FT208PPC	Checkmate monitor with Plug-n-Play connectors, top overfill and bottom retain detection, for Canadian 'B' trains
FT208PSS	Checkmate monitor with Plug-n-Play connectors, dual pressure switches
FT208LCM	Checkmate monitor with Plug-n-Play connectors, dual pressure switches
FT220	Alarm module with sonalert
FT295	Alarm interface module assembly

NEW

See page 131 for repair kits and replacement parts.

Stand Alone Socket Assemblies



FT390PG-20

Features and Benefits:
- Prewired and factory tested with Plug-n-Play cabling and plugs, eliminates hours of manual crimped wire connections, and removes the problems and worries associated with connection problems.
- Aluminum housings, with either aluminum hardcoat or stainless steel wear rings, stainless steel contact pins.
- Dual and triple socket assemblies ***take less space*** than multiple single sockets.

Available Integrated Options:
- Pre-wired internal ground wire (dual or triple socket assemblies)
- Pre-wired TIM module (dual or triple socket assemblies)
- FT300P and FT301P sockets are available with Flotech™ unique guaranteed for life stainless steel wear rings as options. Plug-n-Play dual and triple sockets come standard with guaranteed for life stainless steel wear rings.

Part #	Description
FT300P	Single socket with Plug-n-Play connector. API Optic, 6 contact pins and 3 J slots (U.S.)
FT300PG	Single socket with Plug-n-Play connector. API Optic, 6 contact pins and 3 J slots (U.S.). With internal ground wire.
FT301P	Single socket with Plug-n-Play connector. API Thermistor, 8 contact pins and 4 J slots (U.S.)
FT306P	Single socket with Plug-n-Play connector. Optic J560 type
FT390PG-20	Dual socket assembly with Plug-n-Play connector on 20 ft cable. API Optic, 6 contact pins and 3 J slots, and Thermistor,10 contact pins and 4 J slots. Internal ground wire. Guaranteed for life stainless steel wear rings included. (U.S.)
FT394P	Triple socket assembly with Plug-n-Play connector. API Optic, 6 contact pins and 3 J slots, Thermistor,10 contact pins and 4 J slots, and Optic J560 type. Guaranteed for life stainless steel wear rings included. (U.S.)
FT394PG	Triple socket assembly with Plug-n-Play connector. API Optic, 6 contact pins and 3 J slots, Thermistor,10 contact pins and 4 J slots, and Optic J560 type. With internal ground wire. Guaranteed for life stainless steel wear rings included. (U.S.)
FT394VP	Triple socket assembly in a vertical socket arrangement with Plug-n-Play connector. API Optic, 6 contact pins and 3 J slots, Thermistor,10 contact pins and 4 J slots, and Optic J560 type. Guaranteed for life stainless steel wear rings included. (U.S.)
FT394VPG	Triple socket assembly in a vertical socket arrangement with Plug-n-Play connector. API Optic, 6 contact pins and 3 J slots, Thermistor,10 contact pins and 4 J slots, and Optic J560 type. With internal ground wire. Guaranteed for life stainless steel wear rings included. (U.S.)
FT395P-20	Triple socket assembly with Plug-n-Play connector on 20' cable. Optic, 6 contact pins and 4 J slots, Thermistor,10 contact pins and 4 J slots, and Optic J560 type. Guaranteed for life stainless steel wear rings included. (Canada)
FT395PG-20	Triple socket assembly with Plug-n-Play connector on 20' cable. Optic, 6 contact pins and 4 J slots, Thermistor,10 contact pins and 4 J slots, and Optic J560 type. With internal ground wire. Guaranteed for life stainless steel wear rings included. (Canada)
FT391P-20	Dual socket Plug-n-Play assembly with 4-J slots; 20 feet of Plug-n-Play cable
FT391PG-20	Dual socket Plug-n-Play assembly with 4-J slots and internal ground wire; 20 feet of Plug-n-Play cable

See pages 131 - 137 for repair kits and replacement parts.

Product instruction sheets and technical data can be viewed on our website at dixonvalve.com
Biofuel Compatible

Fuel Tanker Overfill Detection

FloTech™ Checkmate Overfill/Retain Plug-n-Play System Overfill Sensors



Features and Benefits:

- Overfill detection sensors are intended to detect a pending overfill condition inside the fuel tank compartment. When they are wetted (come in contact with the fuel) they signal the fuel loading rack to close the fuel supply control valve, to prevent a spill of product.
- Prewired and factory tested with Plug-n-Play cabling and plugs, eliminates hours of manual crimped wire connections, and removes the problems and worries associated with connection problems. Easy to install, just mount the housing into the tank and plug the cables together.
- Trouble free probes: FloTech™ brand probes incorporate a double elastomer design which seals and secures the sensitive glass optic prism tip. The elastomer seals are flexible allowing thermal expansion and resistance to steam cleaning and petroleum chemical attack.
- Custom lengths available upon request
- The FT151P series sensor housing contains a Plug-n-Play probe in a cast aluminum housing. The sensor housing has a 2" NPT mounting thread, heavy duty stainless steel hardware, and FKM probe seal. Install into either a 2" NPT threaded port or a 2⅜" diameter tank opening using the gasket and locking nut provided. All screws and rings are heavy duty stainless steel for easy assembly and long life.

Part #	Description
FT151P	Housing with 7" Plug-n-Play overfill detection probe, with Plug-n-Play harness connector
FT151P-12	Housing with 12" Plug-n-Play overfill detection probe, with Plug-n-Play harness connector
FT151P-18	Housing with 18" Plug-n-Play overfill detection probe, with Plug-n-Play harness connector

Replacement Probes

Part #	Description
FT150P	Replacement 7" Plug-n-Play probe with Plug-n-Play harness connector
FT150P-12	Replacement 12" Plug-n-Play probe with Plug-n-Play harness connector
FT150P-18	Replacement 18" Plug-n-Play probe with Plug-n-Play harness connector

See page 138 for repair kits and replacement parts.

Retain Sensors



Features and Benefits:

- Retain sensors inform the loading terminal if the tank compartments are empty, or if there is product left in the tank prior to re-loading the tank (product has been retained).
- Prewired and factory tested with Plug-n-Play cabling and plugs, eliminates hours of manual crimped wire connections, and removes the problems and worries associated with connection problems. Easy to install, just mount the housing into the tank and plug the cables together.
- Trouble Free Probes: FloTech™ brand probes/sensors incorporate a double elastomer design which seals and secures the sensitive optic prism tip. The elastomer seals are flexible allowing thermal expansion and resistance to steam cleaning and petroleum chemical attack.
- The FT152 sensor is a bottom retain detection sensor. Sensor is shipped with a ½" NPT weld-on aluminum half coupling for mounting. The main sensor portion is stainless steel to prevent galling in the tank. The wiring box is plastic to prevent corrosion.

Part #	Description
FT152P	Housing with Plug-n-Play retain probe, with Plug-n-Play harness connector

See page 139 for repair kits and replacement parts.

Product instruction sheets and technical data can be viewed on our website at dixonvalve.com

Biofuel Compatible

Fuel Tanker Overfill Detection

FloTech™ Checkmate Overfill/Retain Plug-n-Play System Wiring Harnesses



Features and Benefits:

- Prewired and factory tested with Plug-n-Play cabling and plugs, eliminates hours of manual crimped wire connections, and removes the problems and worries associated with connection problems. Easy to install, just mount all the components (sensors, sockets, monitors) onto the tank and plug them into the preconfigured harness.
- Plug-n-Play cable harnesses come preconfigured for the type of tank (truck mounted tanks or for full length tank trailers) the number of tank compartments, standard harnesses have been designed to fit most standard tank configurations.
- Custom length harnesses are available.
- Secure and weather tight connections all the time, remove the possibility of poor wiring connections. Sealed connectors pass IP67 and DIN40050 salt spray tests.

Part #	Description
Overfill detection Plug-n-Play cable harnesses for full length tank trailers	
FT20801	One compartment tank trailer. Overfill detection (top) cable harness with Plug-n-play connections
FT20802	Two compartment tank trailer. Overfill detection (top) cable harness with Plug-n-play connections
FT20803	Three compartment tank trailer. Overfill detection (top) cable harness with Plug-n-play connections
FT20804	Four compartment tank trailer. Overfill detection (top) cable harness with Plug-n-play connections
FT20805	Five compartment tank trailer. Overfill detection (top) cable harness with Plug-n-play connections
FT20806	Six compartment tank trailer. Overfill detection (top) cable harness with Plug-n-play connections
Retain detection Plug-n-Play cable harnesses for full length tank trailers	
FT20801S	One compartment tank trailer. Retain (bottom) cable harness with Plug-n-play connections
FT20802S	Two compartment tank trailer. Retain (bottom) cable harness with Plug-n-play connections
FT20803S	Three compartment tank trailer. Retain (bottom) cable harness with Plug-n-play connections
FT20804S	Four compartment tank trailer. Retain (bottom) cable harness with Plug-n-play connections
FT20805S	Five compartment tank trailer. Retain (bottom) cable harness with Plug-n-play connections
FT20806S	Six compartment tank trailer. Retain (bottom) cable harness with Plug-n-play connections
Overfill detection Plug-n-Play cable harnesses for truck mounted tanks	
FT20801TWS	One compartment truck mounted tank. Overfill detection (top) cable harness with Plug-n-play connections
FT20802TWS	Two compartment truck mounted tank. Overfill detection (top) cable harness with Plug-n-play connections
FT20803TWS	Three compartment truck mounted tank. Overfill detection (top) cable harness with Plug-n-play connections
FT20804TWS	Four compartment truck mounted tank. Overfill detection (top) cable harness with Plug-n-play connections
FT20805TWS	Five compartment truck mounted tank. Overfill detection (top) cable harness with Plug-n-play connections
FT20806TWS	Six compartment truck mounted tank. Overfill detection (top) cable harness with Plug-n-play connections

Product instruction sheets and technical data can be viewed on our website at dixonvalve.com

Biofuel Compatible

Fuel Tanker Overfill Detection

Checkmate Overfill Detection Systems (Top Detection Only)

Features & Benefits:

- FloTech™ brand overfill system kits provide everything needed to install a new overfill system on your tank. One to eight compartment kits are available from our inventory. Systems include: 1 FT208 monitor, 1 FT151 overfill sensor per compartment, FT404 cable and FT402 strain reliefs (cable glands).
- Other probe lengths are available



Part #	Description
FT2801	Checkmate, 1 compartment system (top only)
FT2802	Checkmate, 2 compartment system (top only)
FT2803	Checkmate, 3 compartment system (top only)
FT2804	Checkmate, 4 compartment system (top only)
FT2805	Checkmate, 5 compartment system (top only)
FT2806	Checkmate, 6 compartment system (top only)
FT2807	Checkmate, 7 compartment system (top only)
FT2808	Checkmate, 8 compartment system (top only)
FT2801-12	Checkmate, 1 compartment system (top only) - 12" probes
FT2802-12	Checkmate, 2 compartment system (top only) - 12" probes
FT2803-12	Checkmate, 3 compartment system (top only) - 12" probes
FT2804-12	Checkmate, 4 compartment system (top only) - 12" probes
FT2805-12	Checkmate, 5 compartment system (top only) - 12" probes
FT2806-12	Checkmate, 6 compartment system (top only) - 12" probes
FT2807-12	Checkmate, 7 compartment system (top only) - 12" probes
FT2808-12	Checkmate, 8 compartment system (top only) - 12" probes

Please refer to chart on pages 61 - 64 for cross references to other manufacturer part numbers.

FloTech™ Checkmate Overfill/Retain Black and White 2 Wire System Checkmate Overfill and Retain Detection Systems

Features and Benefits:

- FloTech™ brand overfill system kits provide everything needed to install a new overfill system on your tank. One to eight compartment kits are available from our inventory. Systems include: 1 FT208 monitor, 1 FT151 overfill sensor and 1 FT152 retain sensor per compartment, FT404-150 cable and FT403 strain reliefs (cable glands).
- Other probe lengths are available



Part #	Description
FT2811	Checkmate, 1 compartment system (overfill & retain)
FT2812	Checkmate, 2 compartment system (overfill & retain)
FT2813	Checkmate, 3 compartment system (overfill & retain)
FT2814	Checkmate, 4 compartment system (overfill & retain)
FT2815	Checkmate, 5 compartment system (overfill & retain)
FT2816	Checkmate, 6 compartment system (overfill & retain)
FT2817	Checkmate, 7 compartment system (overfill & retain)
FT2818	Checkmate, 8 compartment system (overfill & retain)
FT2811-12	Checkmate, 1 compartment system (overfill & retain) - 12" probes
FT2812-12	Checkmate, 2 compartment system (overfill & retain) - 12" probes
FT2813-12	Checkmate, 3 compartment system (overfill & retain) - 12" probes
FT2814-12	Checkmate, 4 compartment system (overfill & retain) - 12" probes
FT2815-12	Checkmate, 5 compartment system (overfill & retain) - 12" probes
FT2816-12	Checkmate, 6 compartment system (overfill & retain) - 12" probes
FT2817-12	Checkmate, 7 compartment system (overfill & retain) - 12" probes
FT2818-12	Checkmate, 8 compartment system (overfill & retain) - 12" probes

Please refer to chart on pages 61 - 64 for cross references to other manufacturer part numbers.

Fuel Tanker Overfill Detection

FloTech™ Checkmate Overfill/Retain Black & White 2 Wire System Monitor, Overfill Sensors, Replacement Probes and Retain Sensors



FT208

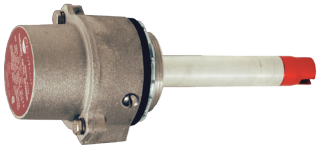

FT151



FT152

Checkmate Onboard Monitors

Features and Benefits:
- Easy to follow programming guide for up to eight compartments top only or top and bottom service with the same monitor
- Monitor can be programmed up to 100,000 times without sending it back to the factory
- Stainless steel terminal blocks resist rusting of contacts
- Stainless steel hardware is used on all products
- Powder coated color matched components for exceptional appearance
- Auxiliary input for Hobbs type switches
- Power control relay output
- Drop-in compatibility with competitors products, see compatibility chart on pages 61 - 64.
- Wide input power 12-24 VDC
- Monitors include advanced diagnostic capabilities as well as signal translation abilities for all socket types (optic, thermistor or float). The system offers true load at any rack compatibility.

Available integrated options:
- Optional FloTech™ Data Link™ feature (patent pending) is only available on Checkmate model onboard monitors. Data Link™ gives maintenance staff the ability to download the performance and diagnostic history of the overfill system. Plug the FloTech™ hand-held diagnostic terminal, into the Checkmate monitor and download to your PC. A time and date stamped report is generated, showing the history of every wetted or failed sensor, rack connection, auxiliary input and load/unload data.

See page 144 for repair kits and replacement parts.
Please refer to chart on pages 61 - 64 for cross references to other manufacturer part numbers.

Part #	Description
FT208	Checkmate programable monitor and housing
FT207	Checkmate programable replacement monitor only (no housing)

Overfill Detection Sensors

Features and Benefits:
- The FloTech™ thermo-optic 2 wire probe is electronically and mechanically compatible for drop-in replacement of other commonly used 2-wire probes with black and white wires. Providing the fast response and reliability of optic technology in a thermistor application.
- Custom probe lengths available upon request
- The sensor housing contains a black and white 2 wire probe in a cast aluminum housing. The sensor housing has a 2" NPT mounting thread, heavy duty stainless steel hardware, and FKM probe seal. Install into either a 2" NPT threaded port or 2-⅜" diameter tank opening using the gasket and locking nut provided.

Part #	Description
FT151	Housing with 7" black and white 2 wire overfill detection probe
FT151-12	Housing with 12" black and white 2 wire overfill detection probe
FT151-18	Housing with 18" black and white 2 wire overfill detection probe

Replacement Probes

Part #	Description
FT150	Replacement 7" black and white 2 wire overfill detection probe
FT150-12	Replacement 12" black and white 2 wire overfill detection probe
FT150-18	Replacement 18" black and white 2 wire overfill detection probe

Retain Sensors

Features and Benefits:
- Retain sensors inform the loading terminal if the tank compartments are empty, or if there is product left in the tank prior to re-loading the tank (product has been retained).
- Sensor is shipped with a ½" NPT weld-on aluminum half coupling for mounting. The main sensor portion is stainless steel to prevent galling in the tank. The wiring box is nylon to prevent corrosion and is removable to facilitate installation. Our three port housing design is compatible with previous inline and parallel dual port housing.

Part #	Description
FT152	Housing with black and white 2 wire retain probe (see page 141 for repair kits and replacement parts)

Product instruction sheets and technical data can be viewed on our website at dixonvalve.com

Biofuel Compatible

Fuel Tanker Overfill Detection

FloTech™ R/OM Type Overfill Detection Systems (Top Detection Only)



Features and Benefits:

- FloTech™ brand overfill system kits provide everything needed to install a new overfill system on your tank. One to six compartment kits are available from our inventory. Systems include: 1 FT204P monitor, 1 FT202 overfill sensor per compartment, FT401 (100') cable and FT402 (20 pieces) strain reliefs (cable glands). Sockets, inline fuse and instruction booklet sold separately.
- Other probe lengths are available

Part #	Description
FT2101	R/OM type, 1 compartment system (top only)
FT2102	R/OM type, 2 compartment system (top only)
FT2103	R/OM type, 3 compartment system (top only)
FT2104	R/OM type, 4 compartment system (top only)
FT2105	R/OM type, 5 compartment system (top only)
FT2106	R/OM type, 6 compartment system (top only)
FT2101-12	R/OM type, 1 compartment system (top only) - 12" probes
FT2102-12	R/OM type, 2 compartment system (top only) - 12" probes
FT2103-12	R/OM type, 3 compartment system (top only) - 12" probes
FT2104-12	R/OM type, 4 compartment system (top only) - 12" probes
FT2105-12	R/OM type, 5 compartment system (top only) - 12" probes
FT2106-12	R/OM type, 6 compartment system (top only) - 12" probes

FloTech™ R/OM Type Overfill and Retain Red and Black 2 Wire Systems



Features and Benefits:

- FloTech™ brand overfill system kits provide everything needed to install a new overfill system on your tank. One to six compartment kits are available from our inventory. Systems include: 1 FT204P monitor, 1 FT202 overfill sensor and 1 FT206 retain sensor per compartment, FT401 (100') cable and FT403 (30 pieces) strain reliefs (cable glands). Sockets, inline fuse and instruction booklet sold separately.
- Other probe lengths are available

Part #	Description
FT2001	R/OM type, 1 compartment system (overfill and retain)
FT2002	R/OM type, 2 compartment system (overfill and retain)
FT2003	R/OM type, 3 compartment system (overfill and retain)
FT2004	R/OM type, 4 compartment system (overfill and retain)
FT2005	R/OM type, 5 compartment system (overfill and retain)
FT2006	R/OM type, 6 compartment system (overfill and retain)
FT2001-12	R/OM type, 1 compartment system (overfill and retain) - 12" probes
FT2002-12	R/OM type, 2 compartment system (overfill and retain) - 12" probes
FT2003-12	R/OM type, 3 compartment system (overfill and retain) - 12" probes
FT2004-12	R/OM type, 4 compartment system (overfill and retain) - 12" probes
FT2005-12	R/OM type, 5 compartment system (overfill and retain) - 12" probes
FT2006-12	R/OM type, 6 compartment system (overfill and retain) - 12" probes

Fuel Tanker Overfill Detection

FloTech™ R/OM Type Onboard Monitors and Overfill Sensors



FT204P

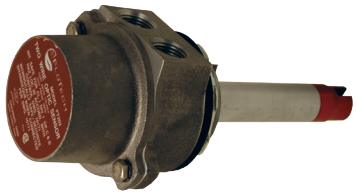

FT202

Checkmate R/OM Type Onboard Monitors

Features and Benefits:

- Easy to follow programming guide for up to six compartments top only or top and bottom service with the same monitor
- Monitor can be programmed up to 100,000 times without sending it back to the factory.
- As the monitor is programmed for the number of compartments, terminators are not required.
- Stainless steel terminal blocks resist rusting of contacts
- Stainless steel hardware is used on all products
- Powder coated color matched components for exceptional appearance
- Auxiliary input
- Wide input power 12-24 VDC
- Drop-in compatibility with competitors products, see compatibility chart on pages 61 - 64.
- Monitors include advanced diagnostic capabilities as well as signal translation abilities for all socket types (optic, thermistor or float). The system offers true load at any rack compatibility.

Part #	Description
FT204P	FloTech™ R/OM type programable monitor & housing.
FT203P	FloTech™ R/OM type programable replacement monitor only. (no housing)
FT203PSPEC	FloTech™ R/OM type programable replacement monitor with 8-hole cover. (no housing)

FloTech™ R/OM Type Overfill Sensors

Features and Benefits:

- Overfill detection sensors are intended to detect a pending overfill condition inside the fuel tank compartment. When they are wetted (come in contact with the fuel) they signal the fuel loading rack to close the fuel supply control valve, to prevent a spill of product.
- The FloTech™ optic 2 wire probe is electronically and mechanically compatible for drop-in replacement of other commonly used 2-wire probes with red and black wires, such as the Civacon ROM system.
- All FloTech™ brand probes are trouble free probes they come with a unique dual elastomer seal for the glass optic prisms. The elastomer seals are flexible allowing thermal expansion and resistance to steam cleaning and temperature changes, along with resistance to petroleum chemical attack. The replacement probes have a smooth tapered tip design for easy replacement installation into the sensor housing without gasket damage.
- Custom probe lengths available upon request
- The sensor housing contains a red and black 2 wire probe, in a cast aluminum housing. The sensor housing has a 2" NPT mounting thread, heavy duty stainless steel hardware, and FKM probe seal. Install into either a 2" NPT threaded port or 2⅜" diameter tank opening using the gasket and locking nut provided. All screws and rings are heavy duty stainless steel for easy assembly and long life.

Part #	Description
FT202	Housing with 7" red and black 2 wire overfill detection probe
FT202-12	Housing with 12" red and black 2 wire overfill detection probe
FT202-18	Housing with 18" red and black 2 wire overfill detection probe

Replacement Probes

Part #	Description
FT201	Replacement 7" red and black 2 wire overfill detection probe
FT201-12	Replacement 12" red and black 2 wire overfill detection probe
FT201-18	Replacement 18" red and black 2 wire overfill detection probe

See page 140 for repair kits and replacement parts.
Please refer to chart on pages 61 - 64 for cross references to other manufacturer part numbers.

Fuel Tanker Overfill Detection

FloTech™ R/OM Type Overfill/Retain Red and Black 2 Wire Systems

Retain Sensors



FT206

Features and Benefits:

- The FT206 sensor is a retain detection sensor. Sensor is shipped with a ½" NPT weld-on aluminum half coupling for mounting. The main sensor portion is stainless steel to prevent galling in the tank. The wiring box is plastic to prevent corrosion and is removable to facilitate installation. The side ports come out of the same side (like the overfill sensors) to make wiring easier. The FT206 is compatible with Civacon model 1000 and the Civacon R/OM System. Our three port housing design is compatible with previous inline and parallel dual port housings.
- Trouble free probes: FloTech™ brand probes/sensors incorporate a double elastomer design which seals and secures the sensitive optic prism tip. The elastomer seals are flexible allowing thermal expansion and resistance to steam cleaning and petroleum chemical attack.

Part #	Description
FT206	Housing with red and black 2 wire retain probe

See page 141 for repair kits and replacement parts.
Please refer to chart on pages 61 - 64 for cross references to other manufacturer part numbers.

Product instruction sheets and technical data can be viewed on our website at dixonvalve.com

Biofuel Compatible

Fuel Tanker Overfill Detection

5 Wire Plug-n-Play

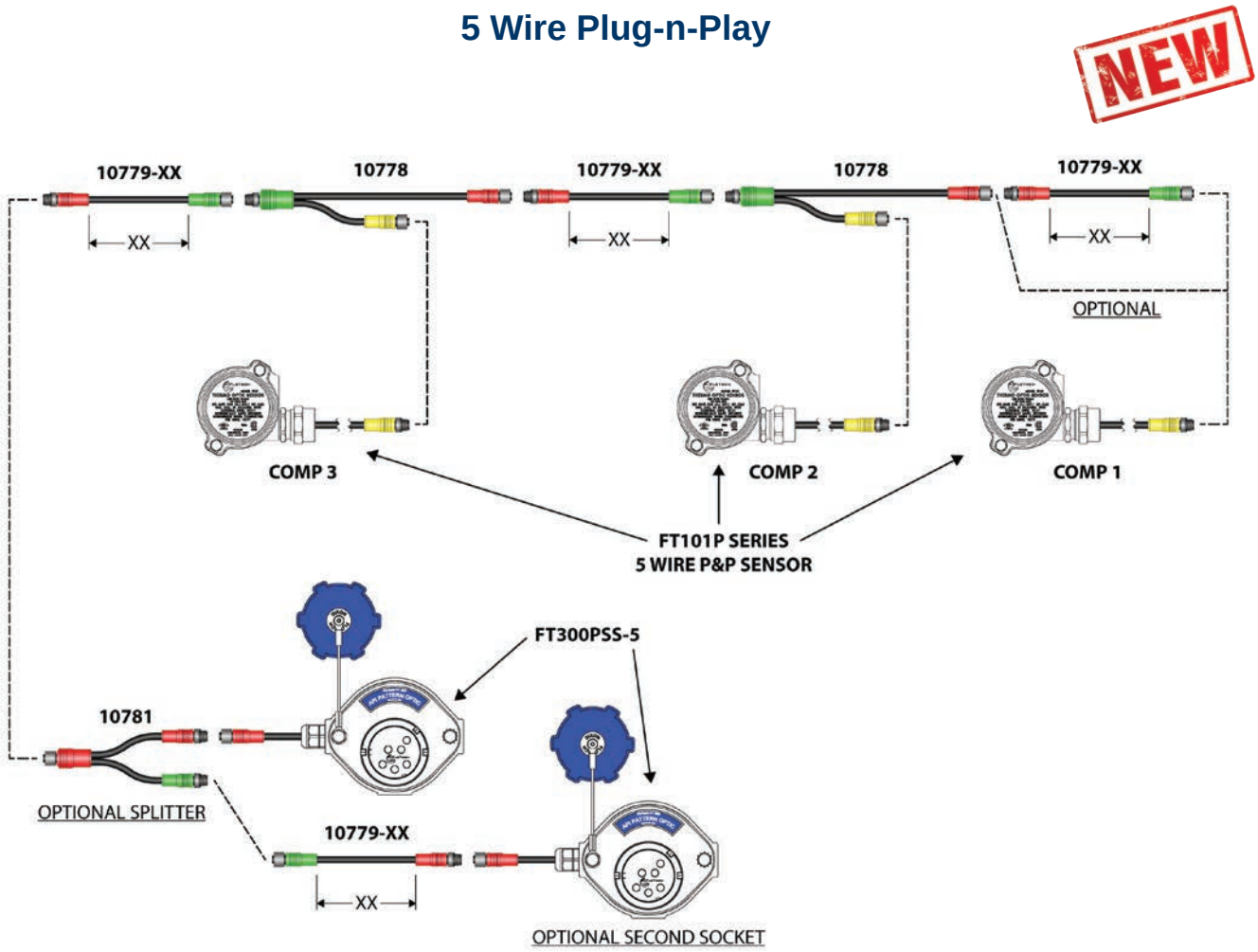

Features & Benefits:	• Simply match like color coded connectors • No crimp connections • No complex schematics • No incorrect wiring connections • No time wasted troubleshooting failed systems. • Modular color coded connector system • Flexible length cables fit any tank configuration • Weather-tight industrial grade connectors maintenance free system • Replacements in stock

10779-XX	Inches
10779-20	20"
10779-40	40"
10779-60	60"
10779-120	120"
10779-240	240"
10779-360	360"
10779-480	480"
10779-600	600"

Fuel Tanker Overfill Detection

FloTech™ API Optic 5 Wire Overfill Detection Systems

Application:	The FloTech™ API Optic 5 wire system is perfectly suited for both new and existing tank installations. The components have a long list of features which make them more reliable than competitor products; the result is years of trouble free service. The FloTech™ API Optic 5 wire system is a conventionally wired system, which requires wiring connections to be made using crimp connectors. If a simple plug together system is desired, please see our Checkmate Plug-n-Play system as shown on pages 36 - 40.
Standards:	Compatible with the Scully brand 5 wire optic system. The components are drop-in replacements and compatible with the signal format required by Scully brand API Optic 5 wire on-board monitors.
Materials:	Dependent upon the component, see each product section for materials
Features & Benefits:	• See the features and benefits of each of the system components • Biofuel compatible up to E100 (100% Ethanol) and B100 (100% bio diesel)

FloTech™ API Optic Overfill 5 Wire Systems (Top Detection Only)



Features and Benefits:

- FloTech™ brand overfill system kits provide everything needed to install a new overfill system on your tank. One to six compartment kits are available from our inventory. Systems include: 1 FT103 monitor, 1 FT101 overfill sensor per compartment, FT400 cable and FT402 strain reliefs (cable glands).
- Other probe lengths are available

Part #	Description
FT1001	API optic 5 wire, 1 compartment overfill detection system (top only)
FT1002	API optic 5 wire, 2 compartment overfill detection system (top only)
FT1003	API optic 5 wire, 3 compartment overfill detection system (top only)
FT1004	API optic 5 wire, 4 compartment overfill detection system (top only)
FT1005	API optic 5 wire, 5 compartment overfill detection system (top only)
FT1006	API optic 5 wire, 6 compartment overfill detection system (top only)
FT1001-12	API optic 5 wire, 1 compartment overfill detection system (top only) - 12" probes
FT1002-12	API optic 5 wire, 2 compartment overfill detection system (top only) - 12" probes
FT1003-12	API optic 5 wire, 3 compartment overfill detection system (top only) - 12" probes
FT1004-12	API optic 5 wire, 4 compartment overfill detection system (top only) - 12" probes
FT1005-12	API optic 5 wire, 5 compartment overfill detection system (top only) - 12" probes
FT1006-12	API optic 5 wire, 6 compartment overfill detection system (top only) - 12" probes

Please refer to chart on pages 61 - 64 for cross references to other manufacturer part numbers.

Product instruction sheets and technical data can be viewed on our website at dixonvalve.com

Biofuel Compatible

Fuel Tanker Overfill Detection

FloTech™ API Optic 5 Wire System Onboard Monitor



Features and Benefits:
- Stainless steel terminal blocks resist rusting of contacts
- Stainless steel hardware is used on all products
- Powder coated color matched components for exceptional appearance
- Drop-in compatibility with competitors products, see compatibility chart on pages 58 - 62.
- Signal translation ability, allows the connection all socket types (optic, thermistor or float). The system offers true load at any rack compatibility.

Part #	Description
FT103	FloTech™ API Optic 5 wire monitor and housing
FT102	FloTech™ API Optic 5 wire replacement monitor only (no housing)

See page 142 for repair kits and replacement parts

FloTech™ API Optic 5 Wire Overfill Detection System Overfill Sensors



Features and Benefits:
- The FloTech™ API optic 5 wire probe is electronically and mechanically compatible for drop-in replacement of other commonly used 5 wire probes.
- Custom probe lengths available upon request
- The sensor housing contains a 5 wire probe, in a cast aluminum housing. The sensor housing has a 2" NPT mounting thread, heavy duty stainless steel hardware, and FKM probe seal. Install into either a 2" NPT threaded port or 2-⅜" diameter tank opening using the gasket and locking nut provided.

Part #	Description
FT101	Housing with 7" - 5 wire overfill detection probe
FT101-12	Housing with 12" - 5 wire overfill detection probe
FT101-18	Housing with 18" - 5 wire overfill detection probe

Replacement Probes

Part #	Description
FT100	Replacement 7" - 5 wire overfill detection probe
FT100-12	Replacement 12" - 5 wire overfill detection probe
FT100-18	Replacement 18" - 5 wire overfill detection probe

See page 140 for repair kits and replacement parts.
Please refer to chart on pages 61 - 64 for cross references to other manufacturer part numbers.

Product instruction sheets and technical data can be viewed on our website at dixonvalve.com

Biofuel Compatible

Fuel Tanker Overfill Detection

Stainless Steel Black and White 2 Wire Probes and Sensor Housings



Features and Benefits:

- The FloTech™ stainless steel probes and sensor housings are designed to be used with chemicals. All wetted services are 316 stainless or PTFE. These probes are designed to thread onto a DOT 407 tank 3" clean out nipple.
- All FloTech™ brand probes are trouble free probes, they come with a unique dual elastomer seal for the glass optic prisms. The elastomer seals are flexible allowing thermal expansion and resistance to steam cleaning and temperature changes, along with resistance to petroleum chemical attack. The replacement probes have a smooth tapered tip design for easy replacement installation into the sensor housing without gasket damage.
- **Custom probe lengths can be available by using ¾" pipe nipples upon request**

Part #	Description
FT150S	7" 316 stainless steel-black and white 2 wire, overfill detection probe only (no housing)
FT191S	Stainless steel probe housing. 3" female NPS thread (housing only, order probe separately)

See page 141 for repair kits and replacement parts.

Stainless Steel 5 Wire Probes and Sensor Housings



Features and Benefits:

- The FloTech™ stainless steel probes and sensor housings are designed to be used with chemicals. All wetted services are 316 stainless or PTFE. These probes are designed to thread onto a DOT 407 tank 3" clean out nipple. Sensor length can be adjusted using ¾" NPT pipe nipples.
- All FloTech™ brand probes are trouble free probes: they come with a unique dual elastomer seal for the glass optic prisms. The elastomer seals are flexible allowing thermal expansion and resistance to steam cleaning and temperature changes, along with resistance to petroleum chemical attack. The replacement probes have a smooth tapered tip design for easy replacement installation into the sensor housing without gasket damage.
- Custom probe lengths available upon request

Part #	Description
FT100S	7" 316 stainless steel 5 wire overfill detection probe only (no housing)
FT191S	Stainless steel probe housing, 3" female NPS thread (housing only, order probe separately)

See page 141 for repair kits and replacement parts.

Product instruction sheets and technical data can be viewed on our website at dixonvalve.com

Biofuel Compatible

Fuel Tanker Overfill Detection

Single Sockets


FT300


FT300GW


FT301


FT301


FT302

Features and Benefits:

- Single face plate sockets have hard coated aluminum alloy J slot wear rings, these ensure a long service life. Also available are single sockets with "guaranteed for life" stainless steel wear rings.
- Stainless steel hardware and contact pins prevent corrosion
- Sockets and caps are color coded with industry standardized colors which allows for easy identification of socket type (optic sockets are blue, thermistor sockets are green, and float sockets are red, colored caps are included for optic and thermistor models only).

Single Sockets with Aluminum Hardcoat J Slot

Part #	Description
FT300	Optic socket API / WOGA, 6 pin and 3 J-slots (US)
FT300GW	Optic Socket API / WOGA, 6 pin and 3 J-Slots with ground wire NEW
FT303	Optic socket, 6 pin and 4 J-slots (US)
FT307	Optic socket, 6 pin and 4 J-slots (Canada)
FT306	Optic socket, J560 pin type
FT301	Thermistor socket, API, 8 pin and 4 J-slots (US)
FT301GW	Thermistor socket, API, 8 pin and 4-J slots with ground wire NEW
FT304	Thermistor socket, 10 pin and 4 J-slots (Canada, Europe)
FT305	Thermistor socket, J560 pin type
FT302	Float, API, J560 pin type socket
Replacement face plates and dust caps	
FT310	API optic face plate assembly, 6 pin. 3-J slots (US)
FT313	Optic pattern contact assembly with thermistor, 6 pin, 4-J slots (US)
FT317	Optic pattern face plate assembly ,6 pin, 4-J slots (Canada)
FT316	Optic replacement face plate, J560 type
FT311	API thermistor face plate assembly, 8 pin, 4-J slots (US)
FT314	Thermistor face plate assembly, 10 pin 4-J slots. (Canada/Europe)
FT315	Thermistor replacement face plate, J560 type
FT320	Replacement blue optic dust cap
FT321	Replacement green thermistor dust cap

Single Sockets with GFL (Guaranteed for Life) Stainless Steel J Slot Wear Rings

GFL series stainless steel nose rings are now available on any configuration J-slot socket that you require. Stainless steel J-slots outlast competitor versions because they are tougher and more corrosion resistant than any other on the market.
GFL socket J-slots are so tough that they are "Guaranteed for Life" against wear. US patent 6,824,423.

Part #	Description
FT300SS	Optic socket API / WOGA, 6 pin and 3 J-slots, GFL stainless J slot wear ring (US)
FT300SSGW	Optic socket API / WOGA, 6 pin and 3-J slots, GFL stainless J slot wear ring with ground wire NEW
FT303SS	Optic socket, 6 pin and 4 J-slots, GFL stainless J slot wear ring (US)
FT307SS	Optic socket, 6 pin and 4 J-slots, GFL stainless J slot wear ring (Canada)
FT301SS	Thermistor socket, API, 8 pin and 4 J-slots, GFL stainless J slot wear ring (US)
FT301SSGW	Thermistor socket, API, 8 pin and 4-J slots, GFL stainless J slot wear ring with ground wire NEW
FT304SS	Thermistor socket, 10 pin and 4 J-slot, GFL stainless J slot wear ring (Canada, Europe)
Replacement face plates and dust caps	
FT310SS	API optic face plate assembly, 6 pin, 3-J slots, GFL stainless J slot wear ring (US)
FT313SS	Optic pattern contact assembly, 6 pin, 4-J slots, GFL stainless J slot wear ring (US)
FT317SS	Optic pattern face plate assembly,6 pin, 4-J slots, GFL stainless J slot wear ring (Canada)
FT311SS	API thermistor face plate assembly, 8 pin, 4-J slots, GFL stainless J slot wear ring (US)
FT314SS	Thermistor face plate assembly 10 pin 4-J slots, GFL stainless J slot wear ring (Canada, Europe)
FT320	Replacement blue optic dust cap
FT321	Replacement green thermistor dust cap

See pages 145 - 147 for repair kits and replacement parts.
Please refer to chart on pages 61-64 for cross references to other manufacturer part numbers.

Product instruction sheets and technical data can be viewed on our website at dixonvalve.com

Biofuel Compatible

Fuel Tanker Overfill Detection

EZ-Cept Double and Triple Sockets



FT390



FT394

Features and Benefits:

- Stainless steel hardware and contact pins prevent corrosion
- Sockets and caps are color coded with industry standardized colors which allows for easy identification of socket type (optic sockets are blue, thermistor sockets are green, and float sockets are red, colored caps are included for optic and thermistor models only).
- Guaranteed for Life J-Slots: Our unique stainless steel alloy J-slot ring will probably outlast your trailer.
- Prewired ready for tank installation, no more long hours wiring and troubleshooting your socket connections. Simply bolt to the trailer and connect to the terminal block in the on board monitor.
- Internal ground wire and ID chip ready: Both internal ground wire and ID chip are normally mounted inside the EZ-Cept housing to protect from the corrosive elements. Or if desired, the bolt can be mounted to the trailer frame and the wire connected to the EZ-Cept internal wire terminal.
- Corrosion resistant hard powder coated housing, stainless steel hardware and contacts and our unique keep dry enclosure design keeps your trailer in service and corrosion at bay. Take a close look at FloTech™ EZ-Cept - we challenge you to find a better constructed API socket on the market.
- Patented, the EZ-Cept has so many innovative features it is covered by US patent 6,824,423. Just another example of how FloTech™ is leading the way delivering reliability and innovation to our valued customers.

EZ-Cept Double Sockets

Part #	Description
FT390	Optic 6 pin, 3 J-slot, and thermistor 10 pin, 4 J-slot, horizontal mount, GFL stainless J slot wear rings (US)
FT390V	Optic 6 pin, 3 J-slot, and thermistor 10 pin, 4 J-slot, vertical mount, GFL stainless J slot wear rings (US)
FT390G	Optic 6 pin, 3 J-slot, and thermistor 10 pin, 4 J-slot, horizontal mount, GFL stainless J slot wear rings, internal ground wire (US)
FT390GT	Optic 6 pin, 3 J-slot, and thermistor 10 pin, 4 J-slot, horizontal mount, GFL stainless J slot wear rings, internal ground wire. T.I.M. chip (US)
FT390T	Optic 6 pin, 3 J-slot, and thermistor 10 pin, 4 J-slot, horizontal mount, GFL stainless J slot wear rings, T.I.M. chip (US)
FT390-20	Optic 6 pin, 3 J-slot, and thermistor 10 pin, 4 J-slot, horizontal mount, GFL stainless J slot wear rings, 20' of cable (US)
FT390G-20	Optic 6 pin, 3 J-slot, and thermistor 10 pin, 4 J-slot, horizontal mount, GFL stainless J slot wear rings, internal ground wire, 20' of cable (US)
FT391	Optic 6 pin, 4 J-slot, and thermistor 10 pin, 4 J-slot, horizontal mount, GFL stainless J slot wear rings (Canada)
FT391V	Optic 6 pin, 4 J-slot, and thermistor 10 pin, 4 J-slot, vertical mount, GFL stainless J slot wear rings (Canada)

See pages 148 & 149 for repair kits and replacement parts.

EZ-Cept Triple Sockets

Part #	Description
FT393	Optic 6 pin, 3 J-slot, thermistor 10 pin, 4 J-slot, and float J560, horizontal mount, GFL stainless J slot wear rings (US)
FT394	Optic 6 pin, 3 J-slot, thermistor 10 pin, 4 J-slot, and optic J560, horizontal mount, GFL stainless J slot wear rings (US)
FT394G	Optic 6 pin, 3 J-slot, thermistor 10 pin, 4 J-slot, and optic J560, horizontal mount, internal ground wire, GFL stainless J slot wear rings (US)
FT394V-G	Optic 6 pin, 3 J-slot, thermistor 10 pin, 4 J-slot, and optic J560, vertical mount, internal ground wire, GFL stainless J slot wear rings (US)
FT395	Optic 6 pin, 4 J-slot, thermistor 10 pin, 4 J-slot, and optic J560, horizontal mount, GFL stainless J slot wear rings (Canada)
FT395G	Optic 6 pin, 4 J-slot, thermistor 10 pin, 4 J-slot, and optic J560, horizontal mount, internal ground wire, GFL stainless J slot wear rings (Canada)
FT395V	Optic 6 pin, 4 J-slot, thermistor 10 pin, 4 J-slot, and optic J560, horizontal mount, internal ground wire, GFL stainless J slot wear rings (Canada)
FT395V-G	Optic 6 pin, 4 J-slot, thermistor 10 pin, 4 J-slot, and optic J560, vertical mount, internal ground wire, GFL stainless J slot wear rings (Canada)

See pages 150 & 151 for repair kits and replacement parts.
Please refer to chart on pages 61-64 for cross references to other manufacturer part numbers.

Product instruction sheets and technical data can be viewed on our website at dixonvalve.com

Biofuel Compatible

Fuel Tanker Overfill Detection

Grounding Ball and Bolt


FT450


10735


FT451

Part #	Description
FT450	Ground verification bolt
FT451	Ground verification ball
10735	Ground wire

NEW

See page 152 for repair kits and replacement parts.
Please refer to chart on pages 61-64 for cross references to other manufacturer part numbers.

FloTech™ Checkmate Overfill/Retain Black & White 2 Wire System Sensor Dummy




FT205

Part #	Description
FT155	Thermistor sensor dummy (each dummy adds up to 5 compartments)
FT205	R/OM terminator

NEW

Cables and Strain Reliefs

Features & Benefits:	Due to the very low current used in overfill systems it's extremely important to use the correct type of cable. The use of other types of cabling often leads to failed overfill systems due mostly to corroded connections. FloTech™ cable is specially produced with tin plated wire, which when connected correctly using crimp connections, will provide years of trouble free service.


FT400


FT402

Part #	Description	System Type
FT400	100' of 5 conductor cable	5 wire API optic
FT400-500	500' of 5 conductor cable	5 wire API optic
FT400-1000	1000' of 5 conductor cable	5 wire API optic
FT401	100' of 7 conductor cable	Red and black 2 wire R/OM type
FT401-150	150' of 7 conductor cable	Red and black 2 wire R/OM type
FT401-1000	1000' of 7 conductor cable	Red and black 2 wire R/OM type
FT404	100' of 11 conductor cable	Black and white 2 wire Checkmate/Thermistor type
FT404-150	150' of 11 conductor cable	Black and white 2 wire Checkmate/Thermistor type
FT404-1000	1000' of 11 conductor cable	Black and white 2 wire Checkmate/Thermistor type
Cable Strain Reliefs (Glands)		
FT402	20 pc pack of strain relief fittings, ½" NPT	
FT403	30 pc pack of strain relief fittings, ½" NPT	
FT405-500	500 pc pack of strain relief fittings, ½" NPT	
Cable Tools and Supplies		
FT9023	Professional cable stripping tool	
FT9024	Professional cable crimping tool	
FT9021	100 pc pack of crimp connectors	
FT9022	2.8 oz tube of GE RTV103 silcone for sealing crimped wired connections	
FT9025	Terminal pins, 14-16 AWG, 100 pieces	

Biofuel Compatible

Fuel Tanker Overfill Detection

Optic System Testers

Application:	Used to trouble shoot overfill system circuits
Standards:	Will work with any optic overfill system
Materials:	Durable plastic case, heavy duty cable connectors and test leads
Features & Benefits:	The FT520 optic test kit includes a tester and test lead set to test 5 wire optic pulse, five wire optic probes, two wire optic probes, plug & play optic probes as well as onboard monitor & socket outputs. It uses the same permissive signal verification as an optic rack monitor. Optional FT521, FT522, FT523 optic test plugs are available for an entire trailer Go, No/Go test, 2 9-volt batteries (included)



FT520



FT520WOGA

Part #	Description
FT520	Optic system tester, 5 piece set of test leads, batteries and instructions
FT520CASE	Optional storage case for FT520
FT520WOGA	Optic system tester, with FT521 API optic 6pin and 3 J slot plug, batteries and instructions
FT520WOGACASE	Optional storage case for FT520WOGA
FT521	API optic test plug, six pins and 3 J slots
FT522	Optic test plug, six pins and 2 or 4 J slots (plug fits both 2 and 4 J slot sockets)
FT523	Optic test plug J560 type
10622	Plug-n-Play test lead set
FT9037	Replacement test lead set for FT520

Trailer Identification Module (T.I.M.) Chip Reader



Application:	Designed to read and test Scully type T.I.M. modules mounted inside API compatible overfill sockets.
Features & Benefits:	• Designed to read Scully T.I.M. chips • Solid aluminum construction • Backlit LCD display • Interchangeable optic or thermistor J-slot screws • Provides long battery life

Part #	Description
FT530	FT520Optic system tester, 4 pc set of test leads, batteries and instructions

FloTech™ Truck Tester



Application:	Allows complete testing of ground bolt grounding systems. Tests ground bolt in forward and reverse just like the rack monitor.
Features & Benefits:	• Reads TIM modules and displays the serial number on the screen • Automatic mode allows all four tests, or any combination, to run for a complete test of the trailer • LCD screen displays the final test results and a pass/fail indication for easy rapid testing of the overfill system • One man "Wet Test" feature FT555 signal an audible alarm sounding a number of beeps that match the wetted sensor • Microprocessor controlled with designed in flexibility to expand into a number of applications • Requires two D cell flashlight batteries that can be changed through a side battery access door

Part #	Description
FT555	Truck Tester

FloTech™ Trailer Identification Module



Application:	Designed as a drop in replacement for the Scully VIP module, providing you with longer life and reduced costs.
Features & Benefits:	• FloTech™ TI Module has the same installation and serial number configuration as the Scully design.

Part #	Description
FT470	Trailer Identification Module

Fuel Tanker Overfill Detection

API Compatible Loading Rack Cords

Application:	API loading rack cords are used to connect the loading rack monitor to the socket on the fuel tanker.
Standards:	Cord sets are interchangeable with Civacon and Scully.
Materials:	Reinforced nylon plugs with stainless steel contact pins and hardware. Heavy duty and highly visible safety orange cord.
Features & Benefits:	• FT600 and FT620 are compatible with API thermistor and optic configurations. • Cords available in coiled or straight lengths • Cord features a heavy highly visible safety orange jacket to meet trip hazard requirements. • Cord is bonded mechanically and has superior abrasion and oil resistance. • Plug body is color coded optic blue or thermistor green. • Button contacts are made from 316 stainless steel to prevent corrosion or galling • All wiring is compatible with standard Scully color codes and wiring number configurations. • The 9 pin conductor is shielded to be compatible with the Scully VIP system.

API Optic Cord Assemblies



FT620

Part #	Description
FT620	Blue plug with 6 contact pins and 3 J slots, on a 30' coiled orange cable
FT620S	Blue plug with 6 contact pins and 3 J slots, on a 20' straight orange cable
FT620P	Blue plug with 6 contact pins and 3 J slots on a 30' orange coiled cord and J560 Plug
FT621	Replacement blue plug assembly with 6 contact pins and 3 J slots
FT622	Replacement 30' orange coiled cord, Optic 6 conductor
FT623	Optic plug storage hanger
FT624	Replacement 20' orange straight cord, Optic 6 conductor

API Thermistor Cord Assemblies

Part #	Description
FT600	Green plug with 8 contact pins and 2 J slots, on a 30' coiled orange cable
FT600P	Green plug with 8 contact pins and 2 J slots on a 30' orange coiled cord and 13 pin connector
FT600S	Green plug with 8 contact pins and 2 J slots, on a 20' straight orange cable
FT600C	Green plug with 10 contact pins and 2 J slots, on a 30' coiled orange cable
FT600CP	Green plug with 10 contact pins and 4 J slots, on a 30' coiled orange cable
FT600SC	Green plug with 10 contact pins and 4 J slots, on a 20' straight orange cable
FT601	Replacement green plug assembly with 8 contact pins and 2 J slots
FT601-10	Replacement green plug assembly with 10 contact pins and 4 J slots
FT602	Replacement 30' orange coiled cord, Thermistor 10 conductor
FT603	Thermistor plug storage hanger
FT604	Replacement 20' orange straight cord, Thermistor 10 conductor

See pages 153-154 for repair kits and replacement parts.
Please refer to chart on pages 61-64 for cross references to other manufacturer part numbers.

Reelcraft® Static Discharge Reels

Application:	Used to ground equipment in hazardous atmospheres, such as fuel trucks or carts transferring flammable materials. When properly clamped to ground, the static discharge reel dissipates static electrical buildup, reduces chances of sparking and the potential for explosion.
Features & Benefits:	• Supplied with a 3/32" OD steel aircraft cable • DC resistance is approximately one ohm per 50' of steel cable

Part #	Description
G3050	Single 7 x 7 stranded steel grounding wire



Product instruction sheets and technical data can be viewed on our website at dixonvalve.com

Biofuel Compatible

Fuel Tanker Overfill Detection

FloTech™ FT151RL ROM Link Replacement Sensor

Application:	The FT151RL is designed to replace the complete ROM Link sensor assembly. Simply remove the Civacon sensor housing from the manhole lid and install the FloTech™ FT151RL or FT151RL-12. Plug the FT151RL into the wiring harness using our connector adapter and the change out is complete.
Standards:	Drop in replacement for the Civacon ROM Link sensors 1554-007 & 1554-0012.
Materials:	Aluminum housing with stainless steel hardware
Features & Benefits:	• Trouble free probes: FloTech™ brand probes incorporate a double elastomer design which seals and secures the sensitive glass optic prism tip. The elastomer seals are flexible allowing thermal expansion and resistance to steam cleaning and petroleum chemical attack. • Unlike our competitors, FloTech™ probes do not use internal coil cord connectors which consistently fail in moisture. All FloTech™ Plug-n-Play probes are prewired to our harness connector, which has proven itself in moisture. • FloTech™ sensor housings have a sturdy bolt on cap to better seal out water. • The FT151RL includes an adapter connector to permit interchange between Civacon's Rom link system and the FloTech™ FT150RL sensor. • Custom lengths available upon request • The FT151RL sensor housing contains a Plug-n-Play probe. The sensor housing has a 2" NPT mounting thread, heavy duty stainless steel hardware, and FKM probe seal. Install into either a 2" NPT threaded port or a 2-⅜" diameter tank opening using the gasket and locking nut provided. All screws and rings are heavy duty stainless steel for easy assembly and long life.



FT151RL



FT152RL

Part #	Description
FT151RL	Housing with 7" Plug-n-Play overfill detection probe, with Plug-n-Play harness and ROM link jumper cable connector
FT151RL-12	Housing with 12" Plug-n-Play overfill detection probe, with Plug-n-Play harness and ROM link jumper cable connector
FT152RL	Retain sensor with Plug-n-Play harness and ROM link jumper cable
Replacement Probes	
FT150P	Replacement 7" Plug-n-Play probe for FT151RL only
FT150P-12	Replacement 12" Plug-n-Play probe for FT151RL-12 only
FT152RL	Replacement Plug-n-Play probe for FT152P
10688	Gender adapter
10605PL	Plug-n-Play harness to monitor connector clip

Please refer to chart on pages 61-64 for cross references to other manufacturer part numbers.

Product instruction sheets and technical data can be viewed on our website at dixonvalve.com

Biofuel Compatible

FloTech™ Replacement Parts

Part #	Description	Refer to Page
FT9000	Sensor housing 2" NPT with parallel ports, complete with all hardware	140
FT9000P	Plug-n-Play sensor housing 2" NPT with parallel ports, complete with all hardware	138
FT9001	Complete sensor housing gasket and O-ring kit	138,140
FT9002	Complete sensor housing gasket, O-ring and hardware kit	140
FT9003	Replacement on-board monitor housing	142-143
FT9004	Replacement on-board monitor hardware kit	142-143
FT9005	Replacement on-board bezel five wire (FT103)	142
FT9006	Replacement on-board bezel two wire (FT204)	143
FT9007	Replacement socket rear housing	133-134, 145, 147
FT9008	Replacement socket contact block with pins FT300 Optic series	132, 147
FT9009	Replacement socket contact block with pins FT301 Thermistor series	132, 147
FT9010	Replacement socket contact block with 10 pins FT304 Thermistor series	147
FT9011	Replacement sensor housing cap with screws and lock washers	138, 140
FT9012	Replacement 2" NPT sensor housing lock nut	138, 140
FT9013	Replacement socket faceplate 4J slot, no contact block or hardware	132, 147
FT9019	Faceplate assembly to fit small Scully Load anywhere housing	---
FT9020	Socket pin, screw and crimp lug	132, 147
FT9021	Crimp connector 100 pieces per bag	55
FT9022	GE RTV 103 silicone rubber sealant 2.8 oz. tube	55
FT9023	Stripping tool for cable jacket	55
FT9024	Crimp tool for splice connections	55
FT9025	Terminal pin, 14-16 AWG 100 pieces	55
FT9026	Sensor flat gasket for 2" NPT through punched hole in man lid	106-107,138, 140
FT9027	Sensor housing probe, FKM O-ring	138, 140
FT9028	Gasket for Scully Go Anywhere monitor face plate	---
FT9029	J560 contact block, 7 way	134, 137, 145, 151
FT9030	Fuse holder with ¼ Amp fuse	142
FT9031	Fuse holder with ½ Amp fuse	143-144
FT9032	Socket face plate gasket	134, 145, 147

FloTech™ Replacement Parts *(continued)*

Part #	Description	Refer to Page
FT9033	Sensor housing, lower no hardware	140
FT9034	Replacement socket face plate 3 J slot, no contact block or hardware	132, 147
FT9035	Program module for FT204P and FT208	130, 131, 143-144
FT9036	FT208 replacement bezel kit	131, 144
FT9037	FT520 test lead set	56
FT9038	Fuse ¼ Amp - for FT103	142
FT9039	Fuse ½ Amp - for FT208 and FT204	131, 143-144
FT9040	Checkmate housing with lid	131, 144
FT9041	Replacement 3-J aluminum socket nose ring	133, 147
FT9042	Replacement 4-J aluminum socket nose ring	133, 147
FT9043	Replacement 3-J stainless socket nose ring	130, 135, 137, 147, 149, 151
FT9044	Replacement 4-J stainless socket nose ring	130, 135, 137, 147, 149, 151
FT9045	Replacement gasket for the FT208 series Checkmate lid	130, 131, 144
FT9046	Bag of 10 replacement socket pins	132, 147
FT9049	Sensor cap O-ring	138, 140
FT9050	Threaded half coupling ½" for retain probe	139, 141
FT9051	Replacement short contact block for FT390/393 Optic 6 pin	130, 135-136, 149, 151
FT9052	Replacement short contact block for FT390/393 Thermistor, 10 pin	130, 135-136, 149, 151
FT9053	Replacement gasket for bezel on monitors FT103/204P	142-143
FT9054	Replacement lid frame for monitors FT103/204P	142-143
FT9059	Replacement face plate and bezel assembly for FT204P	143
FT9061	Replacement contact pin for FT390/393 series socket	130, 135, 137, 147, 149, 151
FT9062	Nose ring assembly, therm, 4J, 10PIN contact block, pin, and hardware for FT390 & FT393	130, 135-136, 149, 151
FT9063	Nose ring assembly, optic, 3J, 6PIN contact block, pin, and hardware for FT390 & FT393	130, 135-136, 149, 151
FT9064	Bezel for FT203P-SPEC	143
FT9065	Bezel gasket for FT203P-SPEC	143
FT9068	Replacement contact block attachment screws and washers (4 each)	130, 132, 135-136, 139, 141, 147, 149, 151

Fuel Tanker Overfill Detection

Competitor Cross Reference Chart

Liquid Level Sensors	FloTech™ Part #	Civacon Part #	Scully Part #	Description
	FT100	1302-007	9209	Replacement probe, optic, 5-wire, 7" long
	FT100-12	1302-0012	9214	Replacement probe, optic, 5-wire, 12" long
	FT100-18	1302-0018	---	Replacement probe, optic, 5-wire, 18" long
	FT100S	1410RS-0060	---	Replacement stainless steel probe, optic, 5-wire, 7" long
	FT101	1112-007 / 1110-007	9208	Sensor, optic, 5-wire, 2" NPT housing, 7" probe
	FT101-12	1112-0012 / 1110-0012	9213	Sensor, optic, 5-wire, 2" NPT housing with 12" probe
	FT101-18	1112-0018 / 1110-0018	---	Sensor, optic, 5-wire, 2" NPT housing with 18" probe
	FT150	1651-007	9409	Replacement probe, thermo-optic, 7" long, 2-wire (black and white)
	FT150-12	1651-0012	9414	Replacement probe, thermo-optic, 12" long, 2-wire (black and white)
	FT150-18	1651-0018	---	Replacement probe, thermo-optic, 18" long, 2-wire (black and white)
	FT151	1551-007	9408	Sensor, thermo-optic, 2" NPT housing, 7" probe, 2-wire (black and white)
	FT151-12	1551-0012	9413	Sensor, thermo-optic, 2" NPT housing,12" probe, 2-wire (black and white)
	FT151-18	1551-0018	---	Sensor, thermo-optic, 2" NPT housing,18" probe, 2-wire (black and white
	FT151RL	1554-007	---	Sensor, ROM Link replacement thermo-optic, 2" NPT housing, 7" probe, 2-wire (black and white)
	FT151RL-12	1554-012	---	Sensor, ROM Link replacement thermo-optic, 2" NPT housing, 12" probe, 2-wire (black and white)
	FT152	---	8819	Thermo optic retain sensor (black and white)
	FT155	1920-5	08298 & 08542	Thermistor dummy, 5 compartment
	FT201	1351-007	---	Replacement R/OM type, 7" top probe, 2-wire (red and black)
	FT201-12	1351-0012	---	Replacement R/OM type, 12" top probe, 2-wire (red and black)
	FT201-18	1351-0018	---	Replacement R/OM type, 18" top probe, 2-wire (red and black)
	FT202	1057-007	---	Top sensor R/OM type, 2" NPT housing, 7" probe, 2-wire (red and black)
	FT202-12	1057-0012	---	Top sensor R/OM type, 2" NPT housing,12" probe, 2-wire (red and black)
	FT202-18	1057-0018	---	Top sensor R/OM type, 2" NPT housing,18" probe, 2-wire (red and black)
	FT206	1000R & 1001R	---	Retain sensor R/OM type, 1/2" NPT sensor (red & black)
	FT9000	1355-1355 & 1455-1455	---	Probe housing
On-Board Monitors	FloTech™ Part #	Civacon Part #	Scully Part #	Description
	FT102	3150-3150	8563	Replacement module API compatible
	FT103	3100-3100	8687	API compatible on-board monitor, with housing
	FT203P	3252-3252	---	Replacement module, R/OM type on-board monitor
	FT203PSPEC	3250 & 3252	---	Replacement module, R/OM type on-board monitor with 8 hole cover and frame
	FT204P	3202-3202 & 3202R-3202	---	R/OM type on-board monitor, with housing
	FT207	---	09100 or 09111	Replacement module, Checkmate on-board monitor
	FT208	---	09109 or 09107	Checkmate programmable monitor for top, or top and bottom sensors

Civacon and R/OM are registered trademarks of Civacon / Dover Corporation

Fuel Tanker Overfill Detection

Competitor Cross Reference Chart (continued)

Sockets	FloTech™ Part #	Civacon Part #	Scully Part #	Description
	FT300	4103-4103	7974	API compatible optic socket with cap (6 pin, 3 J-slots)
	FT301	4400-4400	7720	API compatible thermistor socket with cap (8 pin, 2/4 J-slots)
	FT302	4600-4600	8116	API compatible float socket
	FT303	4201-4201	7976	Optic pattern with thermistor J-slots, and cap (6 pin, 2/4 J-slots) (U.S.)
	FT304	4403-4403	7716	Canadian / European thermistor socket with cap (10 pin, 4 J-slots)
	FT305	4500-4500	7681	Thermistor socket, J560 type
	FT306	4300-4300	8199	Optic socket, J560 type
	FT307	4201-4201	7976	Optic pattern with thermistor J-slots, and cap (6 pin, 2/4 J-slots) (Canada)
	FT310	4110-4110	21790	API optic face plate assembly with cap
	FT311	4111-4111	20770	API thermistor face plate assembly with cap
	FT314	---	20768	Canadian / European thermistor replacement face plate with cap
	FT320	4150-4150	8575	Blue optic dust cap
	FT321	4450-4450	8574	Green thermistor dust cap
	FT390	4820L & 4820R	9060	EZ-Cept dual socket assembly
	FT390G	4822L & 4822R	---	EZ-Cept dual socket assembly with ground bolt
Hardware & Systems Testers	FloTech™ Part #	Civacon Part #	Scully Part #	Description
	FT400	2100-2100	22056	5 conductor cable 100'
	FT400-500	2200-2200	---	5 conductor cable 500'
	FT401	2310-2310	27382	7 conductor cable 100'
	FT401-1000	2401-2401	---	7 conductor cable 1000'
	FT401-150	2300-2300	---	7 conductor cable 150'
	FT402	2510-2510	---	20 strain relief fittings, ½" NPT
	FT403	2530-2530	---	30 strain relief fittings, ½" NPT
	FT450	GS1000	8560	Stainless steel grounding bolt
	FT451	---	8274	Stainless steel grounding ball
	FT470	---	08836	TI module
	FT520	1391-1391	---	Optic system tester
	FT521	1396-1396	---	API optic test plug, six pins & 3 J slots
	FT522	1395-1395	---	Optic test plug, six pins & 2 or 4 J slots (plug fits both 2 & 4 J slot sockets)
	FT523	1397-1397	---	Optic test plug J560 type
	FT555	---	08938	Truck tester
API Rack Cords	FloTech™ Part #	Civacon Part #	Scully Part #	Description
API Optic Cord Assemblies				
	FT620	7100SR-7100	21831	Blue plug with 6 contact pins and 3 J slots, on a 30' coiled orange cable
	FT620S	7100-STRAIGHT	21764	Blue plug with 6 contact pins and 3 J slots, on a 20' straight orange cable
	FT620P	7100-J560	---	Blue plug with 6 contact pins and 3 J slots on a 30' orange coiled cord and J560 Plug
	FT621	7110SR-7110	21766	Replacement blue plug assembly with 6 contact pins and 3 J slots
	FT622	7220-7220	31099	Replacement 30' orange coiled cord, Optic 6 conductor
	FT623	7150-7150	---	Optic plug storage hanger
	FT624	---	31098	Replacement 20' orange straight cord, Optic 6 conductor
API Thermistor Cord Assemblies				
	FT600	7300SR-7300	21818	Green plug with 8 contact pins and 2 J slots, on a 30' coiled orange cable
	FT600P	7320SR-7320	---	Green plug with 8 contact pins and 2 J slots on a 30' orange coiled cord and 13 pin connector
	FT600S	7300-STRAIGHT	20830	Green plug with 8 contact pins and 2 J slots, on a 20' straight orange cable
	FT600C	7300CSR-7300	31092	Green plug with 10 contact pins and 4 J slots, on a 30' coiled orange cable
	FT600SC	7300C-STRAIGHT	---	Green plug with 10 contact pins and 4 J slots, on a 20' straight orange cable
	FT601	7310SR-7310	20769	Replacement green plug assembly with 8 contact pins and 2 J slots
	FT601-10	---	8959	Replacement green plug assembly with 10 contact pins and 4 J slots
	FT602	---	31097	Replacement 30' orange coiled cord, Thermistor 10 conductor
	FT603	7350-7350	---	Thermistor plug storage hanger
	FT604	---	20834	Replacement 20' orange straight cord, Thermistor 10 conductor

Civacon and R/OM are registered trademarks of Civacon / Dover Corporation

Fuel Tanker Overfill Detection

Competitor Cross Reference Chart (continued)

On-Board Systems	FloTech™ Part #	Civacon Part #	Scully Part #	Description
	FT1001	2001-2001	---	API compatible 1 compartment system 7" probe
	FT1001-12	2001S-0012	---	API compatible 1 compartment system 12" probe
	FT1002	2002-2002	---	API compatible 2 compartment system 7" probes
	FT1002-12	2002S-0012	---	API compatible 2 compartment system 12" probes
	FT1003	2003-2003	---	API compatible 3 compartment system 7" probes
	FT1003-12	2003S-0012	---	API compatible 3 compartment system 12" probes
	FT1004	2004-2004	8305	API compatible 4 compartment system 7" probes
	FT1004-12	2004S-0012	---	API compatible 4 compartment system 12" probes
	FT1005	2005-2005	8306	API compatible 5 compartment system 7" probes
	FT1005-12	2005S-0012	---	API compatible 5 compartment system 12" probes
	FT1006	2006-2006	---	API compatible 6 compartment system 7" probes
	FT1006-12	2006S-0012	---	API compatible 6 compartment system 12" probes
	FT2001	3021-3021	---	R/OM type, 1 compartment system, overfill & retain, 7" probe
	FT2001-12	3021S-0012	---	R/OM type, 1 compartment system, overfill & retain, 12" probe
	FT2002	3022-3022	---	R/OM type, 2 compartment system, overfill & retain, 7" probes
	FT2002-12	3022S-0012	---	R/OM type, 2 compartment system, overfill & retain, 12" probes
	FT2003	3023-3023	---	R/OM type, 3 compartment system, overfill & retain, 7" probes
	FT2003-12	3023S-0012	---	R/OM type, 3 compartment system, overfill & retain, 12" probes
	FT2004	3024-3024	---	R/OM type, 4 compartment system, overfill & retain, 7" probes
	FT2004-12	3024S-0012	---	R/OM type, 4 compartment system, overfill & retain, 12" probes
	FT2005	3025-3025	---	R/OM type, 5 compartment system, overfill & retain, 7" probes
	FT2005-12	3025S-0012	---	R/OM type, 5 compartment system, overfill & retain, 12" probes
	FT2006	3026-3026	---	R/OM type, 6 compartment system, overfill & retain, 7" probes
	FT2006-12	3026S-0011	---	R/OM type, 6 compartment system, overfill & retain, 12" probes
	FT2101	3031-3031	---	R/OM type, 1 compartment system, overfill only, 7" probe
	FT2101-12	3031S-0012	---	R/OM type, 1 compartment system, overfill only, 12" probe
	FT2102	3032-3032	---	R/OM type, 2 compartment system, overfill only, 7" probes
	FT2102-12	3032S-0012	---	R/OM type, 2 compartment system, overfill only, 12" probes
	FT2103	3033-3033	---	R/OM type, 3 compartment system, overfill only, 7" probes
	FT2103-12	3033S-0012	---	R/OM type, 3 compartment system, overfill only, 12" probes
	FT2104	3034-3034	---	R/OM type, 4 compartment system, overfill only, 7" probes
	FT2104-12	3034S-0012	---	R/OM type, 4 compartment system, overfill only, 12" probes
	FT2105	3035-3035	---	R/OM type, 5 compartment system, overfill only, 7" probes
	FT2105-12	3035S-0012	---	R/OM type, 5 compartment system, overfill only, 12" probes
	FT2106	3036-3036	---	R/OM type, 6 compartment system, overfill only, 7" probes
	FT2106-12	3036S-0012	---	R/OM type, 6 compartment system, overfill only, 12" probes
	FT2801	---	8251	Checkmate system, 1 compartment system, overfill only, 7" probe
	FT2802	---	8352	Checkmate system, 2 compartment system, overfill only, 7" probes
	FT2803	---	8353	Checkmate system, 3 compartment system, overfill only, 7" probes
	FT2804	---	8354	Checkmate system, 4 compartment system, overfill only, 7" probes
	FT2805	---	8355	Checkmate system, 5 compartment system, overfill only, 7" probes

Civacon and R/OM are registered trademarks of Civacon / Dover Corporation

Fuel Tanker Overfill Detection

Competitor Cross Reference Chart (continued)

On-Board Systems	FloTech™ Part #	Civacon Part #	Scully Part #	Description
	FT2806	---	8356	Checkmate system, 6 compartment system, overfill only, 7" probes
	FT2807	---	8380	Checkmate system, 7 compartment system, overfill only, 7" probes
	FT2808	---	8381	Checkmate system, 8 compartment system, overfill only, 7" probes
	FT2811	---	8361	Checkmate system, 1 compartment system, overfill & retain, 7" probe
	FT2812	---	8362	Checkmate system, 2 compartment system, overfill & retain, 7" probes
	FT2813	---	8363	Checkmate system, 3 compartment system, overfill & retain, 7" probes
	FT2814	---	8364	Checkmate system, 4 compartment system, overfill & retain, 7" probes
	FT2815	---	8365	Checkmate system, 5 compartment system, overfill & retain, 7" probes
	FT2816	---	8366	Checkmate system, 6 compartment system, overfill & retain, 7" probes
	FT2817	---	8382	Checkmate system, 7 compartment system, overfill & retain, 7" probes
	FT2818	---	8383	Checkmate system, 8 compartment system, overfill & retain, 7" probes

Civacon and R/OM are registered trademarks of Civacon / Dover Corporation

Fuel Tanker Overfill Detection

Socket Profiles

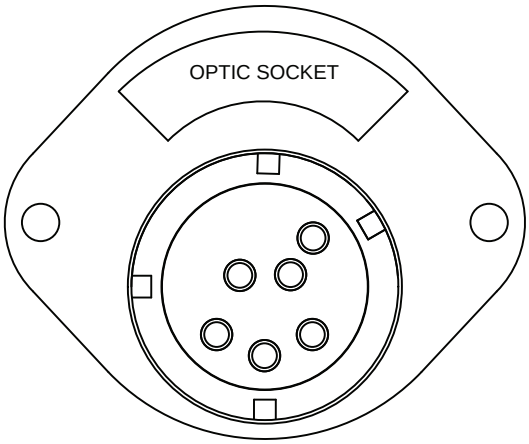

FT303 Optic socket (US)
FT313 Replacement faceplate
FT307 Optic socket (Eastern Canada)
FT317 Replacement faceplate

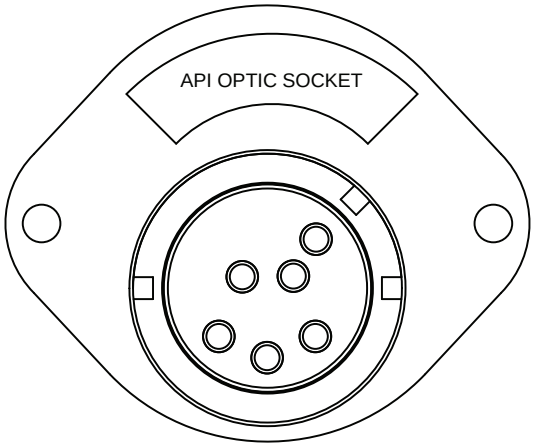

FT300 API optic socket (US)
FT310 Replacement faceplate

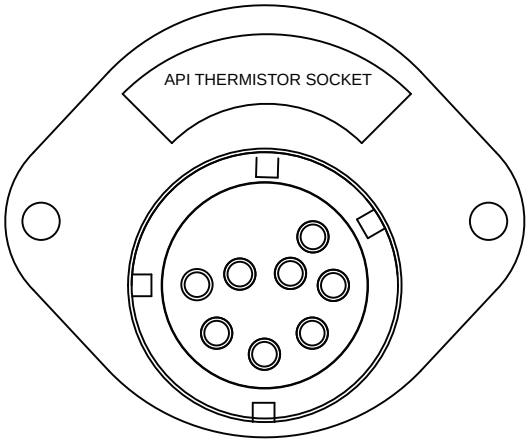

FT301 API Thermistor socket (US)
FT311 Replacement faceplate assembly

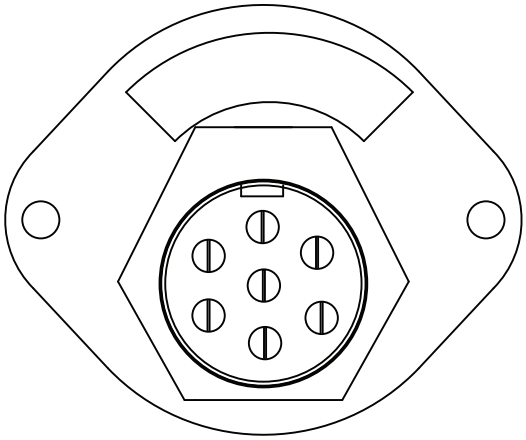

FT302 Float J560 socket (US)
FT312 Replacement faceplate float J560 socket
FT305 Thermistor J560 socket (US)
FT315 Replacement faceplate Thermistor J560 socket
FT306 Optic J560 socket (western Canada)
FT316 Replacement faceplate optic J560 socket

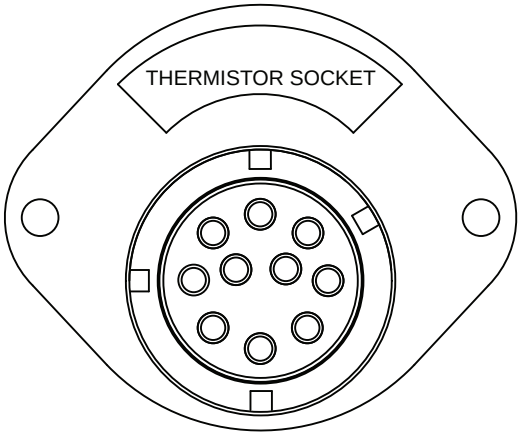

FT304 Thermistor socket (Canada)
FT314 Replacement faceplate

Fuel Tanker Overfill Detection

Socket Profiles

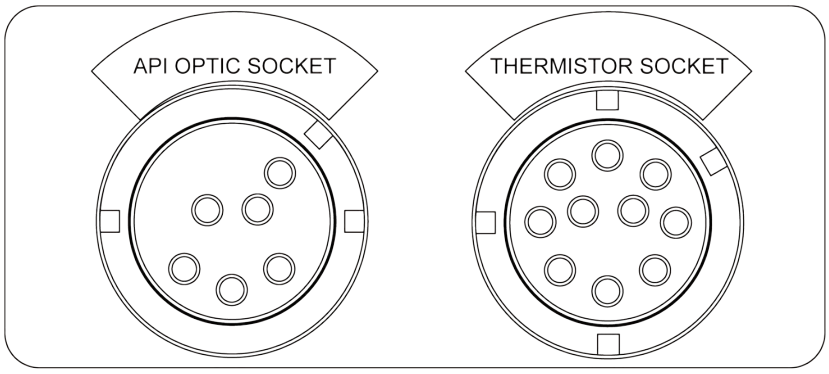

FT390 Dual socket (US)

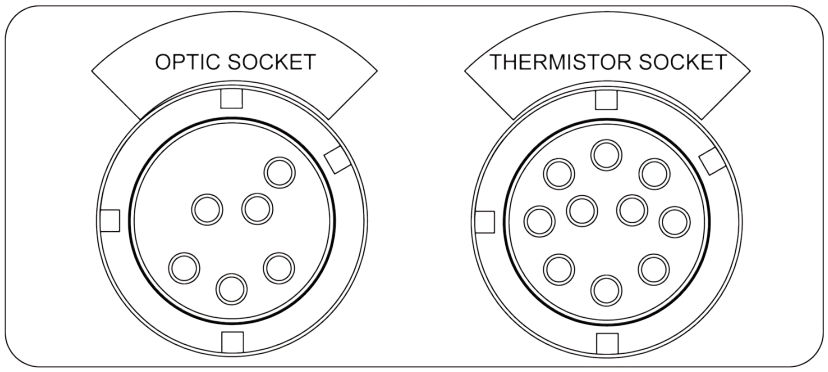

FT391 Dual socket (Canada)

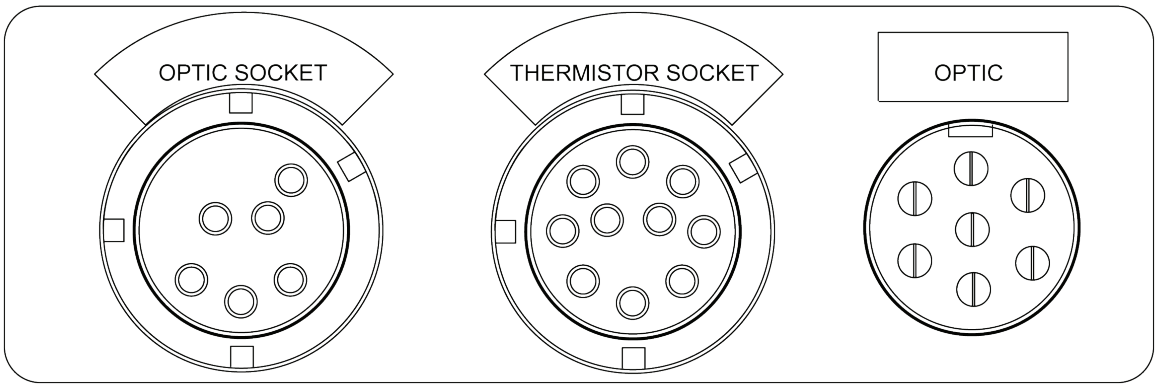

FT395 Triple socket (Canada)

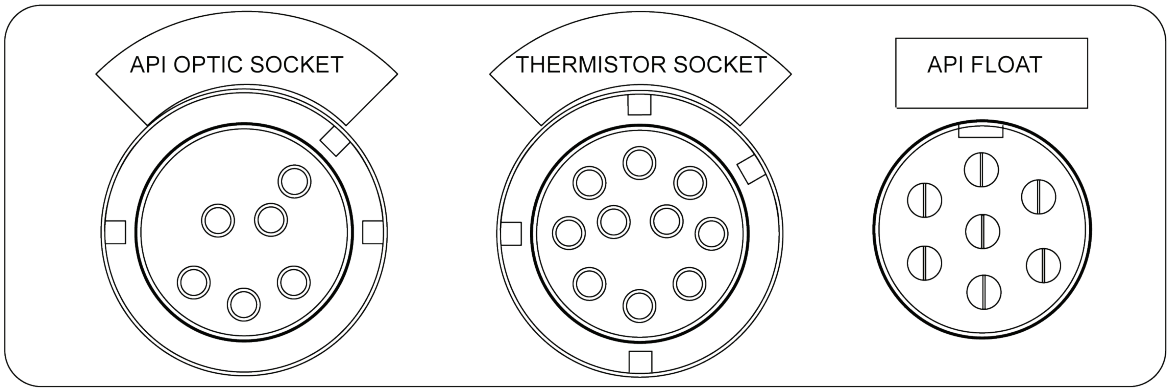

FT393 Triple socket (US)