Application Guide

M-6200A B-2355 Series Cooper Hardware Kit Installation Instructions

BECKWITH ELECTRIC®

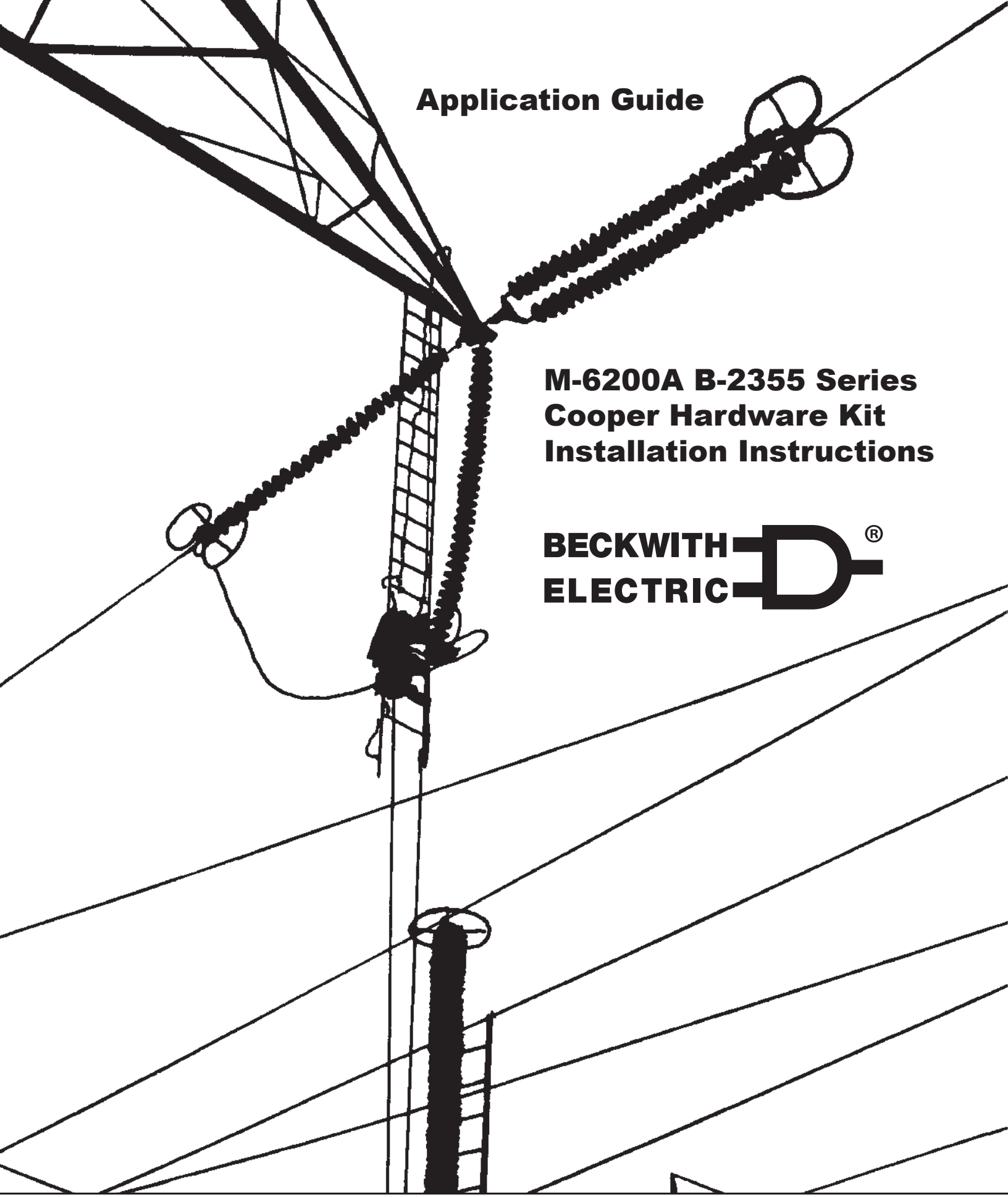

A proud member of the Hubbell family.

TRADEMARKS

All brand or product names referenced in this document may be trademarks or registered trademarks of their respective holders.

The content of this Instruction Book is provided for informational use only and is subject to change without notice. Beckwith Electric has approved only the English version of this document.

WARNING

DANGEROUS VOLTAGES, capable of causing death or serious injury, are present on the external terminals and inside the equipment. Use extreme caution and follow all safety rules when handling, testing or adjusting the equipment. However, these internal voltage levels are no greater than the voltages applied to the external terminals.

DANGER! HIGH VOLTAGE



– This sign warns that the area is connected to a dangerous high voltage, and you must never touch it.

PERSONNEL SAFETY PRECAUTIONS

The following general rules and other specific warnings throughout the manual must be followed during application, test or repair of this equipment. Failure to do so will violate standards for safety in the design, manufacture, and intended use of the product. Qualified personnel should be the only ones who operate and maintain this equipment. Beckwith Electric assumes no liability for the customer's failure to comply with these requirements.



– This sign means that you should refer to the corresponding section of the operation manual for important information before proceeding.



Always Ground the Equipment

To avoid possible shock hazard, the chassis must be connected to an electrical ground. When servicing equipment in a test area, the Protective Earth Terminal must be attached to a separate ground securely by use of a tool, since it is not grounded by external connectors.

Do NOT operate in an explosive environment

Do not operate this equipment in the presence of flammable or explosive gases or fumes. To do so would risk a possible fire or explosion.

Keep away from live circuits

Operating personnel must not remove the cover or expose the printed circuit board while power is applied. In no case may components be replaced with power applied. In some instances, dangerous voltages may exist even when power is disconnected. To avoid electrical shock, always disconnect power and discharge circuits before working on the unit.

Exercise care during installation, operation, & maintenance procedures

The equipment described in this manual contains voltages high enough to cause serious injury or death. Only qualified personnel should install, operate, test, and maintain this equipment. Be sure that all personnel safety procedures are carefully followed. Exercise due care when operating or servicing alone.

Do not modify equipment

Do not perform any unauthorized modifications on this instrument. Return of the unit to a Beckwith Electric repair facility is preferred. If authorized modifications are to be attempted, be sure to follow replacement procedures carefully to assure that safety features are maintained.

PRODUCT CAUTIONS

Before attempting any test, calibration, or maintenance procedure, personnel must be completely familiar with the particular circuitry of this unit, and have an adequate understanding of field effect devices. If a component is found to be defective, always follow replacement procedures carefully to that assure safety features are maintained. Always replace components with those of equal or better quality as shown in the Parts List of the Instruction Book.

Avoid static charge

This unit contains MOS circuitry, which can be damaged by improper test or rework procedures. Care should be taken to avoid static charge on work surfaces and service personnel.

Use caution when measuring resistances

Any attempt to measure resistances between points on the printed circuit board, unless otherwise noted in the Instruction Book, is likely to cause damage to the unit.

TABLE OF CONTENTS

M-6200A Application Guide
B-2355 Series Cooper Hardware Kit
Installation Instructions

1 Introduction 1

2 Mechanical/Physical Information 1

Figure 1 M-6200A Outline Dimensions 2

Figure 2 M-6200A Rear Layout 3

3 External Connections 4

Terminal Block Assignments 4

Typical Connections 4

Grounding 4

Unit Isolation 4

Terminal Block Torque Requirements 4

Control Power Backup Input Connection 4

Backup Power Requirements 5

Terminal Block Assignments (TB1) 6

Table 1 Multi-Step Voltage Reduction External Connections 6

Terminal Block Assignments (TB2) 8

Figure 3 Typical Control Power Backup Connection with M-2026 or M-2027 Supply 9

Figure 4 B-0920 Control Power Backup Input 3-Wire Harness 9

4 Cooper CL-2, CL-2A, CL-4A, CL-4B, CL-4C, CL-5 and CL-6 Regulator Controls Replacement 10

Application 10

Removal of the Cooper Control 11

Figure 5 Cooper Control in Cabinet 11

Figure 6 Typical Connections for Cooper CL-2, CL-2A, CL-4A, CL-4B, CL-4C, CL-5 and CL-6 Regulator Controls 12

Installing the M-6200A in a Cooper Regulator 13

B-2355-C1/B-2355-C2 Hardware Kit Configuration 14

Table 2 B-2355-C1 and B-2355-C2 Hardware Kit 14

Figure 7 B-2355-C1/B-2355-C2, B-2355-C3/B-2355-C4 Hardware Kit Orientation 15

Figure 8 (B-1128) Cooper Wiring Harness 16

Figure 9 (B-1157) Cooper Wiring Harness with Gray Plug 17

Figure 10 B-2355-C3 (B-1255 and B-1259) Cooper Wiring Harness 18

Figure 11 B-2355-C4 (B-1255 and B-1260) Cooper Wiring Harness 19

B-2355-C3/B-2355-C4 Hardware Kit Configuration 20

Table 3 B-2355-C3 and B-2355-C4 Hardware Kit 20

5 Installing TapTalk 21
Starting TapTalk 21
Figure 12 TapTalk S-6200 Program Icon 21
Initial Local Communications Using Direct USB Connection 21
Direct Communication Using USB (Serial) Connection 21
Figure 13 USB Device Connection Screen 22
Figure 14 Access Level Code Entry Screen 22
Figure 15 Log On – User Name and Password Entry Screen 22

Appendix A HMI Menus

A.1 HMI Menu Flow **A–2**
Figure A-1 Monitor Menu Flow A–2
Figure A-2 Setpoints Menu Flow A–3
Figure A-3 Configuration Menu Floww A–4
Figure A-4 Communication Menu Flow A–6
Figure A-5 Utilities Menu Flow A–7

© 2010 Beckwith Electric. All Rights Reserved.

1 Introduction

This Application Guide is intended for those personnel that are responsible for the installation of the M-6200A Digital Regulator Control. It provides the mechanical orientation of inputs and outputs as well as physical dimensions of the control. External connections to the control are detailed to assist installation personnel with various applications of the control.

The M-6200A through the use of hinge brackets, a latch bracket where required and a unit specific wiring harness allow the unit to directly replace Cooper CL-2, CL-2A, CL-4A, CL-4B, CL-4C, CL-5 and CL-6 regulator controls.

Detailed instructions are provided for those specific applications where the M-6200A is directly replacing Cooper controls.

Also provided are instructions for the installation of TapTalk S-6200 Communications Software and establishing initial local communications with the target control.

2 Mechanical/Physical Information

The M-6200A Regulator Control physical dimensions are illustrated in Figure 1. General Layout of the M-6200A components are illustrated in Figure 2. Do not position the M-6200A in a way that will make it difficult to operate the power disconnect device.

The following is a brief summary of specifications that may be required for installation.

Voltage Withstand:
140 V continuous
240 V for one second
480 V for one cycle
Voltage measurement linear to 140 V

Current Withstand:
Load Current:
0.48 amps continuous
4.0 amps for one second

Output Raise and Lower circuits:
6 amps AC

Alarm Contacts:
Programmable Alarm/Selftest (Deadman)
6.0 amps AC, 125 V
0.2 amps DC, 125 V

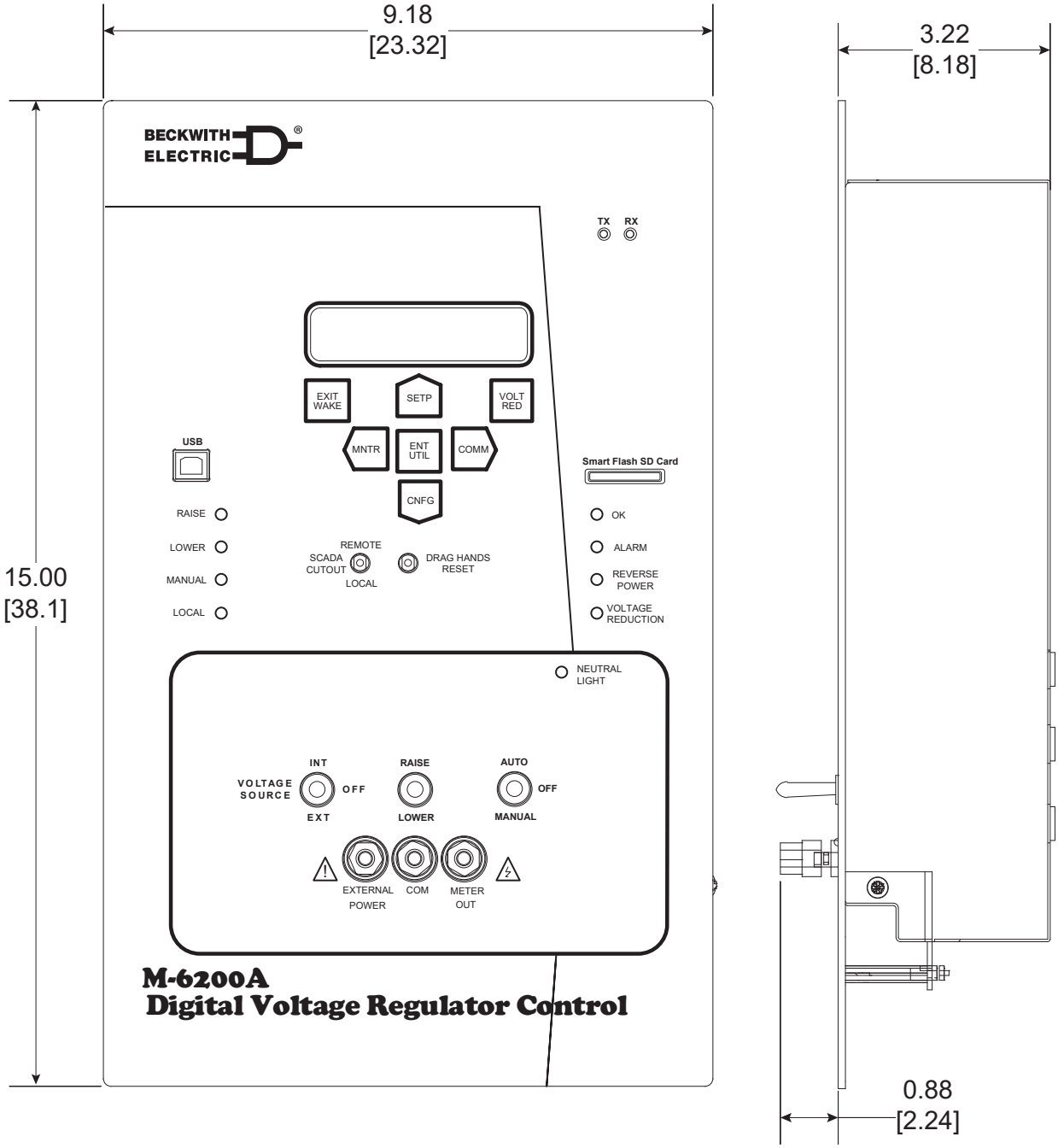

Figure 1 M-6200A Outline Dimensions

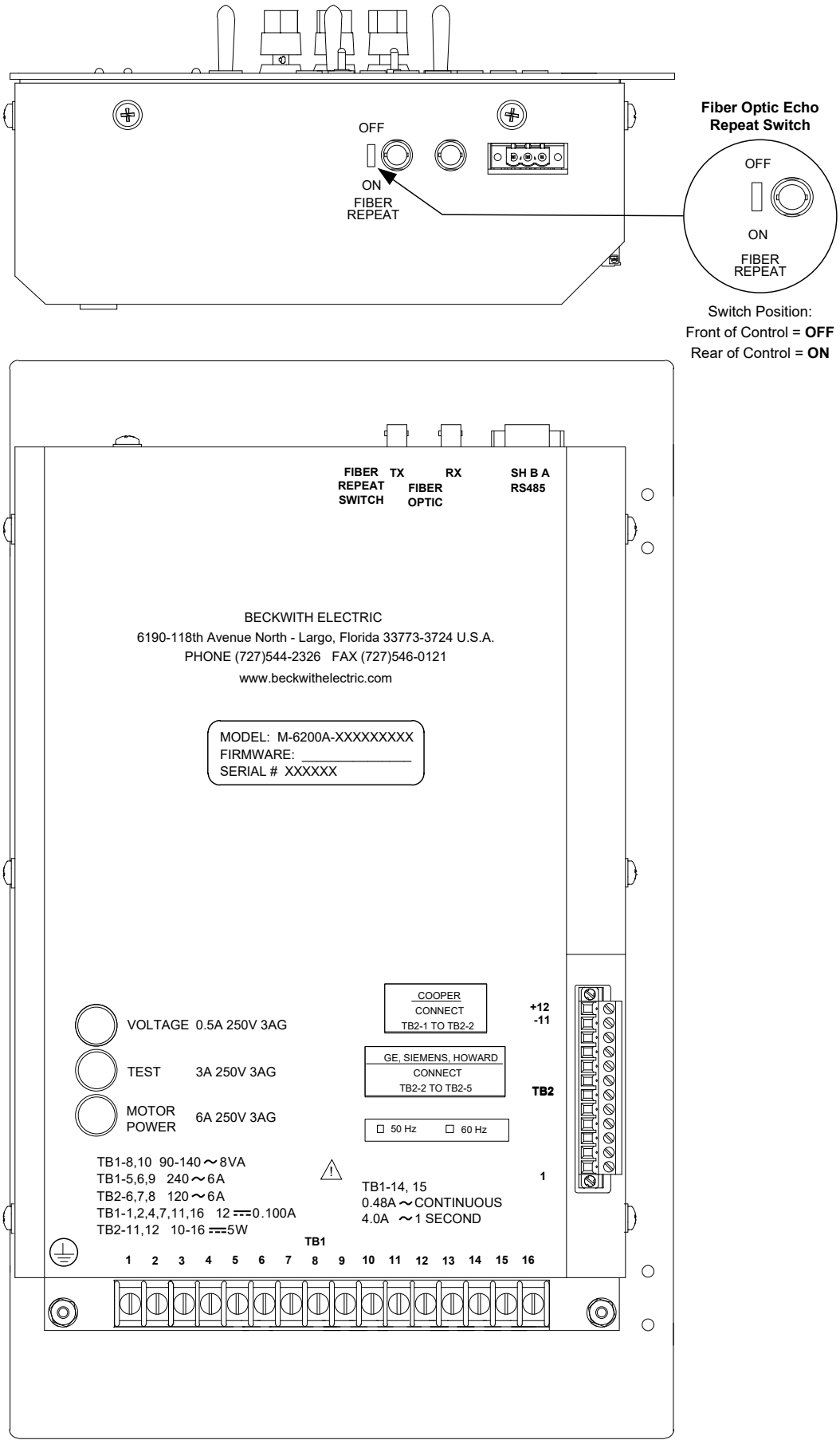

Figure 2 M-6200A Rear Layout

3 External Connections

Terminal Block Assignments

The external connections to the control are made to the two terminal blocks located on the rear of the control. See "Terminal Block Assignments" later in this section for a description of each terminal assignment. For example, if external dry contacts are being used to control the Voltage Reduction Step #1 function, connections for these contacts may be made between TB1-4 and TB1-7 as illustrated in the "Typical Connections" diagrams. The dry contact inputs for non-sequential input, voltage reduction must be "wetted" by connecting to terminal TB1-4. See Table 1.

Typical Connections

The "Typical Connections" diagrams for a regulator control are simplified and may not show all functions required in a particular regulator control scheme. Motor Power and sensing voltage can be obtained from a common source or from an independent source having a nominal 120 Vac output. Normally, this is line-to-neutral voltage, although line-to-line voltage can be used if recognition is made of any phase shift between the voltage and current signals when using line drop compensation.

▲**CAUTION:** The current input to the M-6200A is rated at 0.48 A continuous, and 4.0 A for 1 second.

Load current must be reduced by an appropriate auxiliary transformer to 0.2 A "full scale" before connecting to the regulator current inputs. Refer to the information specific to your regulator application.

Grounding

WARNING: The protective earth grounding terminal must be connected to the installation earth ground anytime external connections have been made to the unit.

Howard Controls: Ground the control by connecting The B-1212 14 AWG green/yellow insulated wire to the marked protective earth terminal located adjacent to either side of TB1. Connect to the installation ground.

All Other Controls: Ground the control by connecting a 14 AWG, 300 V min., 105° C green insulated wire inserted in an Amp 51864-8 or equivalent ring connector wire to the marked protective earth terminal located adjacent to either side of TB1. Connect to the installation ground.

Unit Isolation

Sensing inputs should be equipped with test switches and shorting devices where necessary to isolate the unit from external potential or current sources.

A switch or circuit breaker for the M-6200A's power shall be included in the building installation, and shall be in close proximity to the control and within easy reach of the operator, and shall be plainly marked as being the power disconnect device for the control.

Terminal Block Torque Requirements

Terminals TB1-1-16 & TB2-1-12: 7.5 in-lbs, minimum and 8.0 in-lbs, maximum.

Control Power Backup Input Connection

The Control Power Backup Input (Figure 3) is designed to sustain communication port operation in the event of the loss of AC control power. In the event of a loss of AC input power to the control, this feature permits uninterrupted operation of the control by supplying +12 Vdc to the control. In addition, the control retains functionality with the exception of the actual operation of the tapchanger mechanism.

When the AC input voltage drops below approximately 85 Vrms, the Control Power Backup Input will activate and all automatic tapchange operations will then be suspended. If Motor Power is available, manual tapchanges may be initiated.

When the control is being powered only by the backup DC input the Auto/Manual switch status and the Local/Remote switch status are functional. When a control is being supplied by both AC and DC via the backup power input and the backup DC input is lost the unit will report it via DNP.

When the control is being powered from the Control Power Backup Input, it will continue to read any input voltage present.

The control retains full functionality, and if the control's Motor Power remains energized then Raise and Lower commands from SCADA are possible. Fiber-Optic port operation is maintained. All communication ports, data-logging, status monitoring, configuration, and setpoint capability are also maintained.

Beckwith Electric offers two Control Power Backup supplies for use with the M-6200A. The M-2026 AC-DC Control Power Backup Supply is a fused, surge protected and reverse polarity protected AC-DC Control Power Supply that accepts an AC or DC input (21 to 32, 42 to 60 and 105 to 145 V) and outputs regulated +12 Vdc at up to 1.5 Amp.

The M-2027 Control Power Backup Supply – AC Only is a fused and surge protected Control Power Backup Supply that will accept an AC input range of 105 to 140 Vac, 50/60 Hz and output +12 Vdc to 1 A.

Both the M-2026 and M-2027 are housed in non-weathertight enclosures and are equipped with screw terminal blocks for both input and output connections.

Backup Power Requirements

The Control Power Backup Input that does not utilize the M-2026 or M-2027 should only be used with the optional (B-0920) 3-Wire Harness. The harness (Figure 4), includes a 3 Amp fast-blow fuse, and connects to TB2-11 (–) and TB2-12 (+) of the control.

▲ **CAUTION:** Use of Non-Beckwith Electric converters to provide +12 V to the Control Power Backup Input may compromise system integrity due to a lack of adequate protection of the power converter. For reliability of the M-6200A, the power converter must meet the following requirements:

Temperature: Operational from -40° C to + 85° C.

IEC 60068-2-1	Cold, -40° C
IEC 60068-2-2	Dry Heat, +80° C
IEC 60068-2-78	Damp Heat, +40° C @ 95%$_{RH}$
IEC 60068-2-30	Damp Heat Condensing cycle 25° C, +55° C @ 95%$_{RH}$

Surge Withstand Capability:

IEEE C37.90.1-2002	2,500 V pk Oscillatory 4,000 V pk Fast Transient Burst
IEEE C37.90.1-1989	2,500 V pk Oscillatory 5,000 V pk Fast Transient

Radiated Electromagnetic Withstand Capability:

All units are protected against electromagnetic radiated interference from portable communications transceivers.

Electrostatic Discharge:

IEC 60255-22-2	(8 Kv) – Point Contact Discharge
IEC 60255-22-2	(15 Kv) – Air Discharge

Fast Transient/Burst Immunity:

IEC 60255-22-4-2008	
Class A	(4 Kv, 5 kHz)

TERMINAL BLOCK ASSIGNMENTS (TB1)

TB1-1 Non-Sequential Operation/Auto Tapchange Inhibit (or Aux 2)

Non-Sequential Operation

▲**CAUTION:** Voltage applied through dry contacts to actuate non-sequential input and voltage reduction inputs must be nominal +12 Vdc obtained from TB1-4 of the M-6200A Regulator Control. The use of 120 Vac will result in damage to the control.

The operation of the control can be interrupted during tapchanger operation by applying the "wetting" voltage of TB1-4 to TB1-1 (timer reset for non-sequential operation input) on the control through an external contact. This causes the output to de-energize and reinitialize the time delay circuit when the reset signal is removed. This function can be used to cause the Regulator, if so equipped, to wait for the unit to time out between tapchanges.

Non-sequential operation is invoked by momentarily connecting this input to the nominal +12 Vdc wetting source (TB1-4) through an external Form "a" dry contact. When this function is enabled, the tapchanger control times out with the Time Delay setting between every tapchange.

Auto Tapchange Inhibit

Auto tapchange inhibit is invoked by closing and maintaining a Form "a" dry contact connected to this input and to the nominal +12 Vdc wetting source (TB1-4). As long as this contact is closed, the tapchanger will not time out, thereby prohibiting raise and lower commands.

Auxiliary Input (Aux 2)

To monitor the Battery Alarm Status, the optional Battery Pack sense line must be connected to TB1-1 and the Non-Sequential input must be configured as "Aux 2".

TB1-2 Voltage Reduction Step #2 (or Aux)
TB1-7 Voltage Reduction Step #1 (or Aux 1)

▲**CAUTION:** Voltage applied through dry contacts to actuate non-sequential input and voltage reduction inputs must be nominal +12 Vdc obtained from TB1-4 of the M-6200A Regulator Control. The use of 120 Vac will result in damage to the control.

On the M-6200A Digital Regulator Control, TB1-2 and TB1-7 are used together to provide up to three levels of voltage reduction. The external connections to achieve these steps are shown in Table 1. Voltage reduction amounts are set within the M-6200A Digital Regulator Control software. If these voltage reduction steps are instituted by communications, the contacts are not being used simultaneously.

■**NOTE:** Enabling both voltage reduction Step #1 and Step #2 inputs simultaneously will result in the level of voltage reduction as specified on the voltage reduction Step #3 screen of the control.

These digital inputs are typically enabled by connecting it to the nominal +12 Vdc wetting source (TB1-4), through an external Form "a" dry contact. The amount of voltage reduction is determined by the setting.

Voltage Reduction Setpoint: Multiplier Range	Apply "Wetting Voltage" from TB1-4 to TB #
Voltage Reduction Setpoint #1: 0 to 10%	TB1-7
Voltage Reduction Setpoint #2: 0 to 10%	TB1-2
Voltage Reduction Setpoint #3: 0 to 10%	TB1-7 and TB1-2

Table 1 Multi-Step Voltage Reduction External Connections

Auxiliary Input (Aux 1)

To monitor Intrusion Detection Status, the optional Intrusion Detection switch must be connected to TB1-7 (wetting voltage TB1-4) and the Input Selection 2 (default setting is VR1) must be configured as "Aux 1".

If an Open Condition is detected, a DNP binary input point for intrusion detection will be set and will generate a DNP event. The intrusion detection will also be monitored using MODBUS register 1960.

TB1-3 No Connection or Source Voltage

For Siemens Regulators:

Siemens Harness **B-1136** – Jumper TB1-3 to TB1-9
Siemens Harness **B-1258** – TB1-3 to U2

TB1-4 +12 Vdc Wetting Voltage

This is the output of an unregulated dc power supply internal to the control. It is referenced to neutral and can supply up to 100 mA. It is used for powering the digital inputs of the control through external dry contacts. Depending on the voltage supplied to TB1-10 and loading, its output can vary from +10 to +18 Vdc. The output is current limited with a 1 ohm resistor.

TB1-5 Regulator Raise Output

This switched output connects the tapchanger raise winding to the source of motor power. When the control calls for a raise, it is capable of switching up to 6 A at 120/240 Vac.

TB1-6 Regulator Lower Output

This switched output connects the tapchanger lower winding to the source of motor power. When the control calls for a lower, it is capable of switching up to 6 A at 120/240 Vac.

TB1-8 Neutral

This is the return for the nominal +12 Vdc "wetting" voltage (TB1-4) and the voltage input (TB1-10). Fuse F1 Test (3 amp) provides reverse polarity protection for the Ground binding post.

TB1-9 Motor Power Input

The source for powering the tapchanger motor is connected here. It may have a maximum voltage of 240 Vac.

TB1-10 Load Voltage Input

This input accepts nominal 120 Vac, 60 Hz (or 50 Hz as ordered) to operate the control's power supply and voltage sensing input. The acceptable voltage range for proper control operation is from 90–140 Vac.

Power consumption is less than 8 VA. The input voltage is referenced to line neutral (TB1-8).

TB1-11, TB1-16 Neutral Tap Position Inputs

This digital input registers neutral position switch closures on regulators. The pins are isolated from neutral to permit connection of the input based on regulator configuration.

TB1-12 Drag Hands Reset

The drag hand reset output (TB1-12) connection is commonly used to reset the drag hand on the regulator. When the Drag hand switch on the M-6200A is activated, this will cause the unit to output 120 V to TB1-12. This voltage can be used to energize the drag hand circuitry on the regulator.

TB1-13 Operations Counter Input

This digital input registers the counter contact closure. The operations counter will increment when TB1-13 is grounded by way of the regulator dry operation count switch. This contact is needed for using the intertap time delay. Once a valid counter input is detected, the intertap time delay will begin counting down.

TB1-14 Load Current (+)

▲CAUTION: The current input to the M-6200A is rated at 0.48 A continuous, and 4.0 A for 1 second.

The line current input range is 0–640 mA (480 mA continuous) with 200 mA representing the 1.0 per-unit value. The measured current value is used for line drop compensation and metering calculation.

TB1-15 Load Current (-)

This is the non-polarity input to the load current measuring transformer. The companion polarity input is TB1-14. The line current transformer input is isolated from other pins.

TERMINAL BLOCK ASSIGNMENTS (TB2)

TB2-1 Jumper TB2-1 to TB2-2 for Cooper regulators

Fuse F2 Motor Power (6 amp) is located between the Voltage Source Switch (INT/OFF/EXT) and TB2-1.

TB2-2 Jumper TB2-2 to TB2-5 for all regulators except Cooper

TB2-3 Neutral Light Source

Fuse F3 Voltage (0.5 amp) for control power is located between TB2-3 and the Meter Out binding post. Power input for the control is selected by the Voltage Source Switch (INT/OFF/EXT).

TB2-4 No Connection

TB2-5 Motor Seal-in

Receives an Input from the Cooper Regulator Motor Cam Switch. Hardware Jumper TB2-2 to TB2-5 for all other regulators except Cooper.

TB2-6, TB2-7, TB2-8 User Programmable Alarm

This set of terminals is a Form "C" alarm relay contact rated for 6 A at 120 Vac, or 100 mA at 120 Vdc. This alarm indicates when any of the programmable alarm conditions are detected.

TB2-9, TB2-10 No Connection

TB2-11, TB2-12 Control Power Backup Input

This input allows connection of external 12 Vdc control power backup power. The control retains functionality with the exception of the actual operation of the tapchanger mechanism.

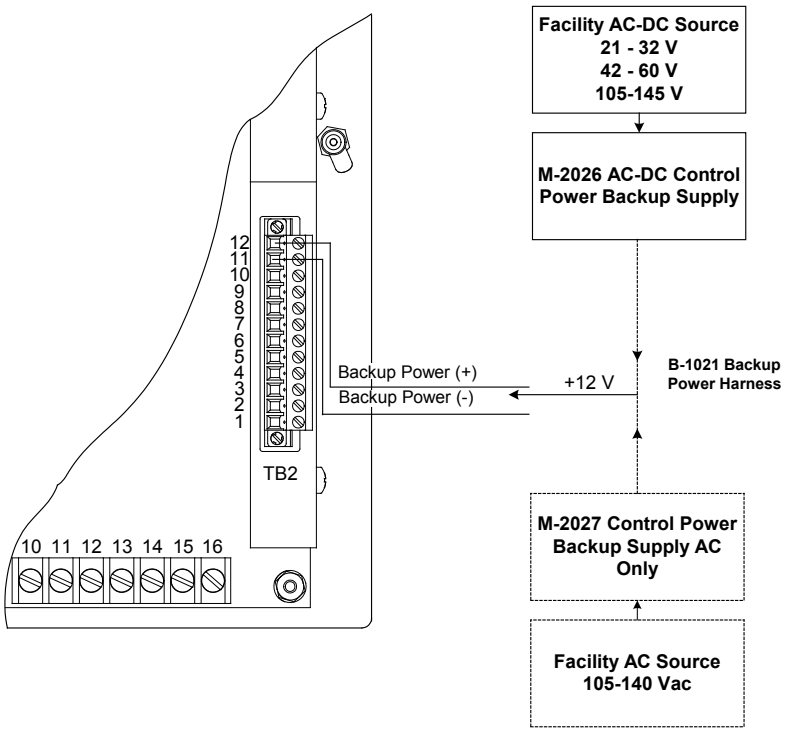

Figure 3 Typical Control Power Backup Connection with M-2026 or M-2027 Supply

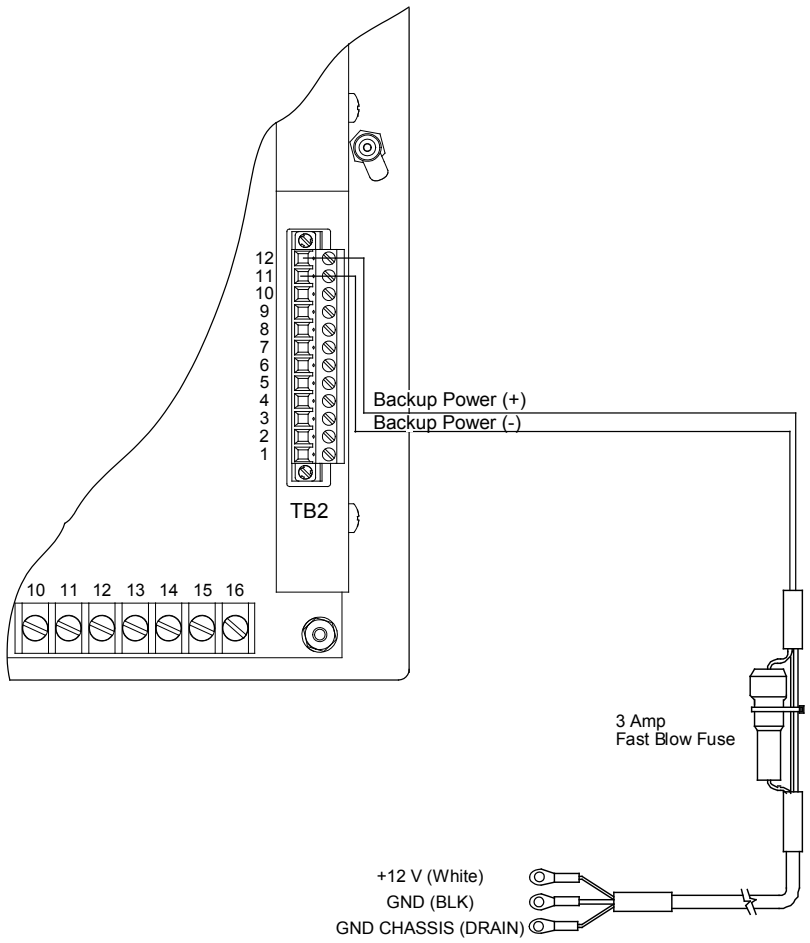

Figure 4 B-0920 Control Power Backup Input 3-Wire Harness

4 Cooper CL-2, CL-2A, CL-4A, CL-4B, CL-4C, CL-5 and CL-6 Regulator Controls Replacement

The Beckwith Electric M-6200A Digital Regulator control directly replaces Cooper CL-2, CL-2A, CL-4A, CL-4B, CL-4C, CL-5 and CL-6 Regulator Controls. The M-6200A may be purchased with the factory installed hardware kits:

- B-2355-C1 CL-2 through CL-5
- B-2355-C2 CL-6
- B-2355-C3 CL-2 through CL-5
- B-2355-C4 CL-6

The contents of the hardware kits provide the means to install the M-6200A in the existing Cooper Regulator Control cabinet. The B-2355-C1, B-2355-C2, B-2355-C3, B-2355-C4 are available separately from the factory for field installation. The difference between the B-2355-C1/B-2355-C3 and B-2355-C2/B-2355-C4 hardware kits is the B-2355-C1/B-2355-C3 contains the harnesses for CL-2 through CL-5 control replacement and the B-2355-C2/B-2355-C4 contain the harnesses for CL-6 control replacement. The remaining kit contents are the same.

Application

Typical Connections

In general, the tapchanger motor must be operated from a different transformer than the VT used to measure regulated voltage. If this is not done, hunting at the upper band edge may result. As soon as the motor starts, and before it is sealed in, the motor current can drop the voltage within the band and reset the control. Some motor seal-in schemes are fast enough to prevent this, but others are not. Pulsed output can be used on the M-6200A (see Instruction Book Chapter 3).

Typical connections for the M-6200A are illustrated in Figure 6. Connections are simplified and may not show all functions required in a typical regulator control scheme – for example, limit switches, etc.

External Connections

Power and voltage sensing are obtained either from a common source or from independent sources having a nominal 120 Vac output. Normally, this is line-to-neutral voltage, although line-to-line voltage can also be used if recognition is made of any phase shift between the voltage and current signals when using line drop compensation.

The external connections for the M-6200A are made to terminal blocks TB1 and TB2 on the rear of the control panel. The wiring harness and external connections for the M-6200A are shown in Figure 8 through Figure 11.

Lightning Protection

▲CAUTION: For proper protection against system surges, chassis ground must be connected to earth ground.

It has been determined that transient voltages in excess of 1500 Vac RMS can exist on the "ground" lead normally tied to TB1-8. In the regulator controls, these voltages are suppressed by varistors which still permit the unit to pass a 1500 Vac hi-pot test for one minute, with a leakage of approximately 15 mA, all terminals to ground.

Multiple VT grounds far apart must be avoided, since a varying difference in ground voltage could add or subtract from the effective voltage, and cause variation in the tapchanger control's bandcenter voltage setpoint.

Non-Sequential Operation/ Counter Input

Not normally used with Cooper Regulators.

Multi-Step Voltage Reduction

▲**CAUTION:** Voltage applied through dry contacts to actuate Voltage Reduction Steps 1, 2, and 3 *must* be +12 Vdc obtained from terminal TB1-4 of the M-6200A Regulator Control.

The M-6200A uses terminals TB1-2 and TB1-7 together to provide up to three levels of voltage reduction. The external connections to achieve these steps are shown in Table 1 and Figure 6. Voltage reduction amounts are set in the M-6200A Regulator Control software.

Removal of the Cooper Control

WARNING: In no case should the line current circuit be interrupted with the regulator or transformer energized. Do not remove auxiliary current transformers without shorting the current inputs. Death or severe electrical shock can occur.

1. Verify that the regulator control wiring is in a safe condition that will allow removal of the Cooper Regulator Control from the control cabinet:
   - The control wiring is de-energized and isolated from any potential safety hazards.
   - All local Safety Tagging rules have been applied as necessary.
2. Open the cabinet door of Cooper control.
3. Loosen the thumb screws on the control panel (Figure 5), and swing the panel outward.
4. **See the WARNING above.** De-energize the control by opening the VT disconnect switch and placing the CT switch in the shorting position. Ensure that the CT in the regulator has been properly shorted.
5. Loosen the screws on the spreader bar terminal block at the bottom of the cabinet, then pull down on the spreader bar to disconnect it.

■**NOTE:** The two hinge pins *must be saved* from the original control.

6. Remove and save the two hinge pins, then lift the panel off of the hinges and remove it from the cabinet.

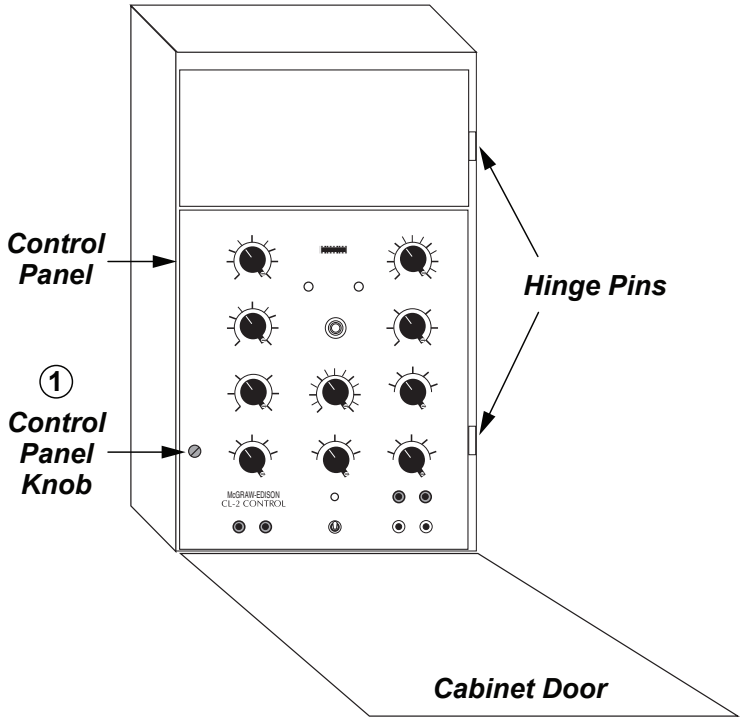

Figure 5 Cooper Control in Cabinet

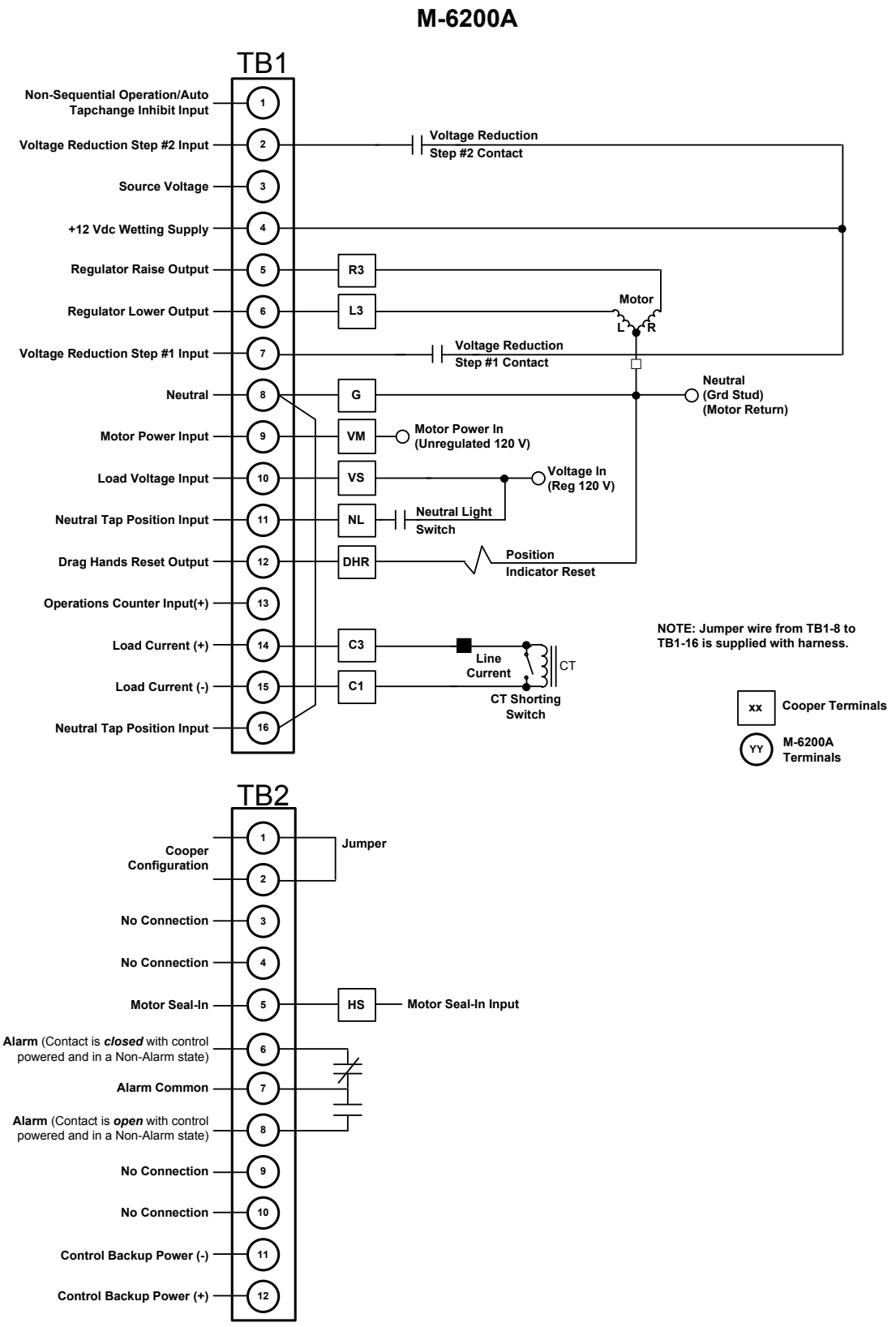

WARNING: In no case should the line current circuit be interrupted with the regulator or transformer energized. Do not remove auxiliary current transformers without shorting the current inputs. Death or severe electrical shock can occur.

Figure 6 Typical Connections for Cooper CL-2, CL-2A, CL-4A, CL-4B, CL-4C, CL-5 and CL-6 Regulator Controls

Installing the M-6200A in a Cooper Regulator

The hinge leaves and latch bracket mechanism are oriented to match the existing hinge leaves and latch of the Cooper control cabinet.

If Bench Testing of the M-6200A is required, refer to Instruction Book Chapter 6.

WARNING: In no case should the line current circuit be interrupted with the regulator or transformer energized. Do not remove auxiliary current transformers without shorting the current inputs. Death or severe electrical shock can occur.

1. Verify that the regulator control wiring is in a safe condition that will allow installation of the M-6200A in the control cabinet:
   - The control wiring is de-energized and isolated from any potential safety hazards.
   - All local Safety Tagging rules have been applied as necessary.
2. Mount the M-6200A Regulator Control onto the hinges in the control cabinet (Figure 5), then install the two hinge pins saved from the original control. Leave the panel in the open position so that the back of the panel is accessible.
3. If the frame that the latch bracket is mounted to requires the use of longer panel thumbscrews, then replace the two panel thumbscrews with the longer versions provided in the cloth bag.
4. Connect the M-6200A's wiring harness to the terminal block at the bottom of the cabinet. Refer to Figure 8 through Figure 11.
5. Set the control to **Manual** mode.
6. To re-energize the control perform the following:
   a. Open the CT switch, removing the CT shorting circuit.
   b. Close the VT disconnect switch.
   c. Swing the adapter panel closed and turn thumbscrews to latch securely.
7. Set up the desired configuration. Refer to Instruction Book Chapter 3.
8. Refer to Instruction Book Chapter 6 for testing requirements.

B-2355-C1/B-2355-C2 Hardware Kit Configuration

1. If the M-6200A to be configured has existing mounting hardware installed, then perform the following:
   a. Remove all hinges, latches, brackets, wiring harnesses and jumpers.
   b. Save/capture all removed hardware for future use.
2. Verify the contents of the B-2355-C1/B-2355-C2 Hardware Kit includes the items in Table 2:

Qty	Description	Beco Part #
1	Top Hinge Half-Female P2393	440-40923
1	Bottom Hinge Half-Female P2373	440-40913
1	Bracket P-2372 Panel Adaptor	441-41323
6	Screw, Fillister, 8-32 x 7/16	470-00830
1	Wire Harness, B-2355 (B-2355-1)	B-1128 (B-1157)
2	Fast Lead Screw	441-00385
2	Fastener, Screw, Retainer	440-00855
2	U-Clip	441-00386

Table 2 B-2355-C1 and B-2355-C2 Hardware Kit

3. Remove pre-cut label material from the four right side hinge mounting holes and the first and fourth (from top) left side hinge mounting holes as viewed from the front of the M-6200A panel.

■**NOTE:** Refer to Figure 7 for location and orientation of hardware kit items.

4. Mount the Bottom Hinge to the lower right side of the M-6200A, then secure (hand tight) the hinge utilizing an 8-32 x $^{7}/_{16}$ screw inserted into the captured fastener in the top hole.
5. Complete the Bottom Hinge installation with an 8-32 x $^{7}/_{16}$ screw inserted into the captured fastener in the bottom hole, then tighten the top screw.
6. Mount the Top Hinge to the upper right side of the M-6200A panel utilizing 8-32 x $^{7}/_{16}$ screws inserted into the captured fasteners.
7. Mount the Latch Bracket to the left side of the M-6200A panel utilizing 8-32 x $^{7}/_{16}$ screws inserted into the captured fasteners in the first and fourth hinge holes from the top.
8. Connect the applicable wiring harness B-1128 for B-2355-C1 or B-1157 for B-2355-C2 to TB1 and TB2 Terminal Blocks as indicated in Figure 8 or Figure 9 (refer to the terminal block torque requirements in Section 3).
9. Verify that a jumper is installed between TB2-1 and TB2-2.
10. Continue with "Installing the M-6200A in a Cooper Regulator" procedure earlier in this section.

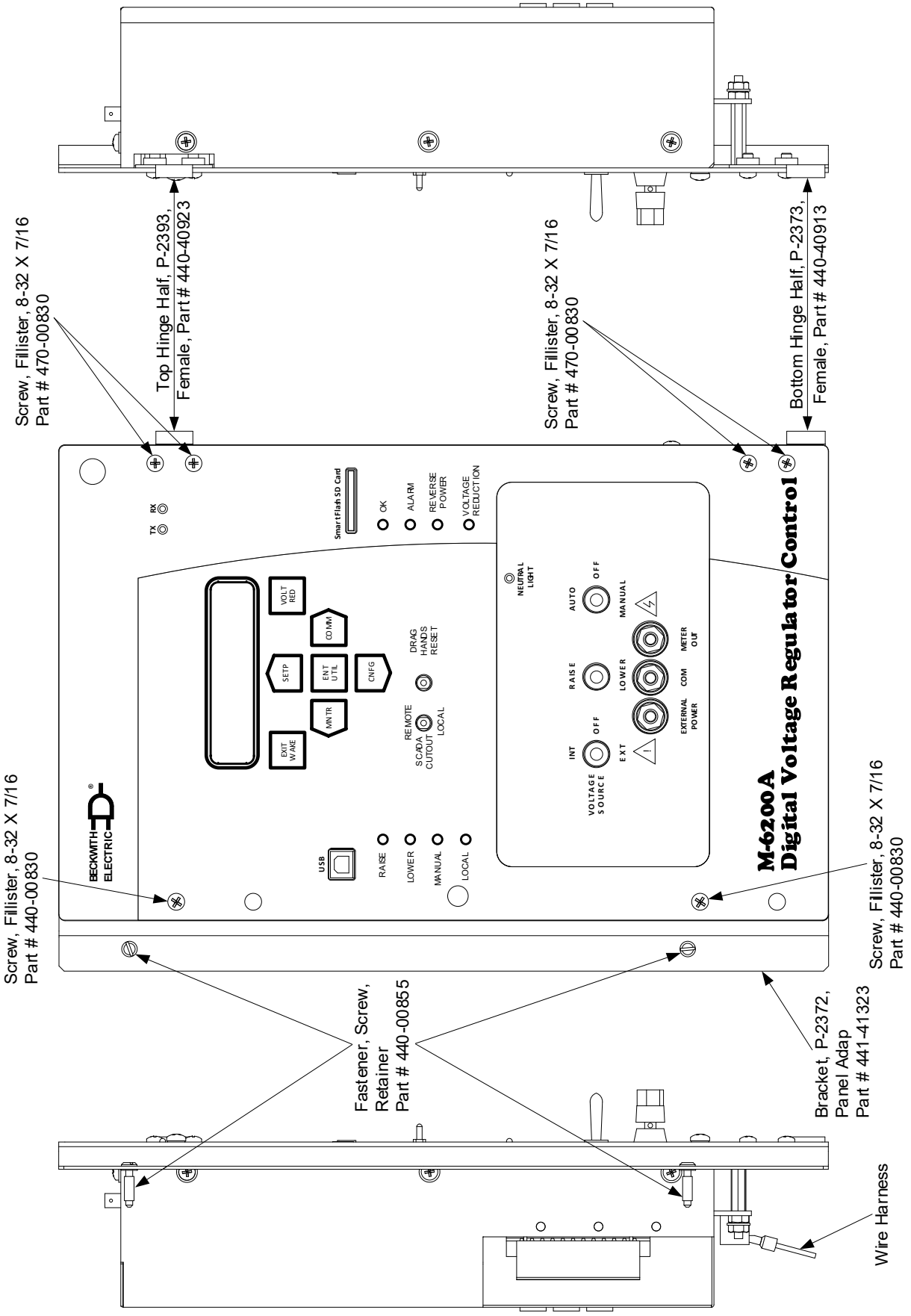

Figure 7 B-2355-C1/B-2355-C2, B-2355-C3/B-2355-C4 Hardware Kit Orientation

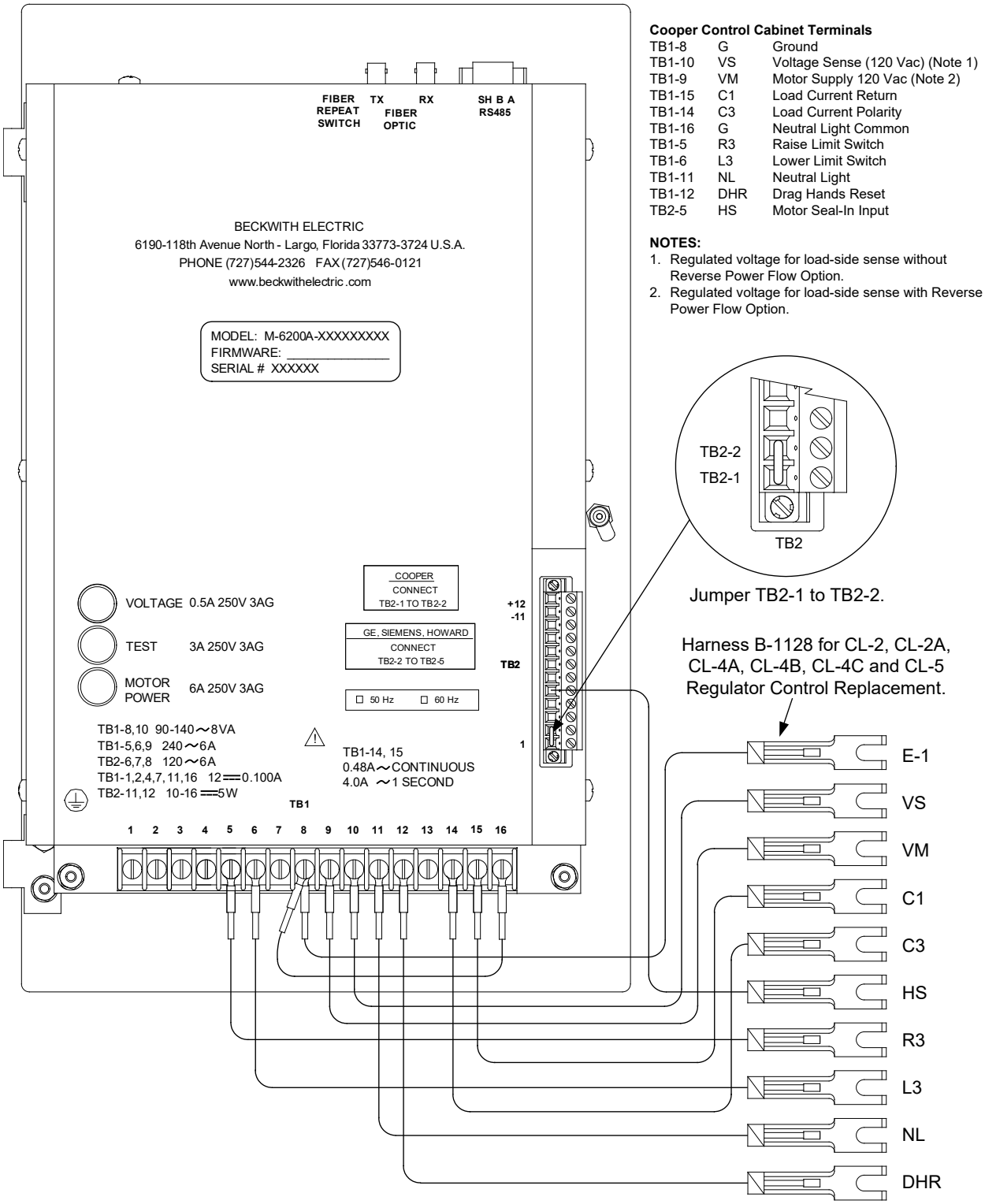

Cooper Control Cabinet Terminals

TB1-8	G	Ground
TB1-10	VS	Voltage Sense (120 Vac) (Note 1)
TB1-9	VM	Motor Supply 120 Vac (Note 2)
TB1-15	C1	Load Current Return
TB1-14	C3	Load Current Polarity
TB1-16	G	Neutral Light Common
TB1-5	R3	Raise Limit Switch
TB1-6	L3	Lower Limit Switch
TB1-11	NL	Neutral Light
TB1-12	DHR	Drag Hands Reset
TB2-5	HS	Motor Seal-In Input

NOTES:
1. Regulated voltage for load-side sense without Reverse Power Flow Option.
2. Regulated voltage for load-side sense with Reverse Power Flow Option.

WARNING: In no case should the line current circuit be interrupted with the regulator or transformer energized. Do not remove auxiliary current transformers without shorting the current inputs. Death or severe electrical shock can occur.

Figure 8 (B-1128) Cooper Wiring Harness

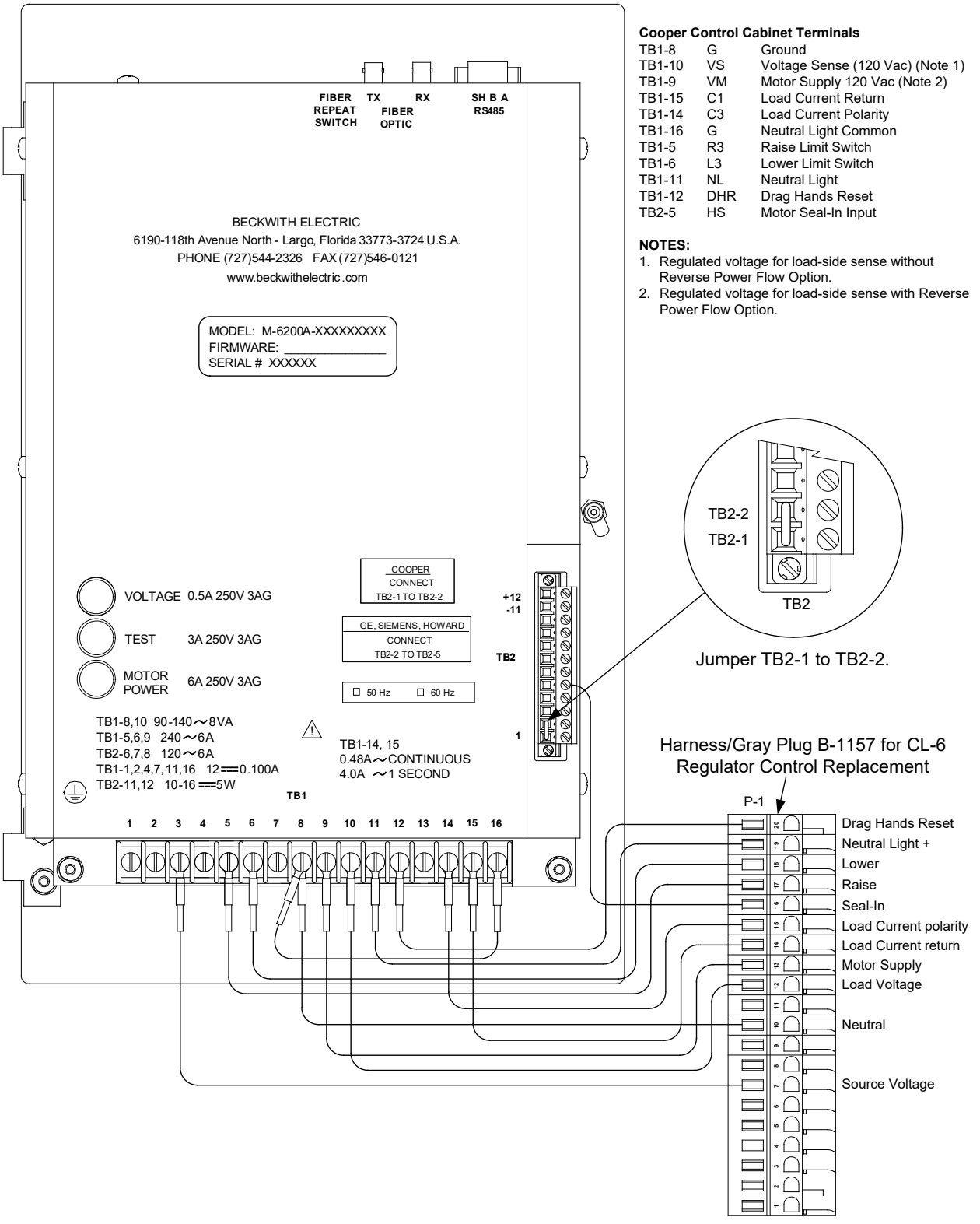

Cooper Control Cabinet Terminals

TB1-8	G	Ground
TB1-10	VS	Voltage Sense (120 Vac) (Note 1)
TB1-9	VM	Motor Supply 120 Vac (Note 2)
TB1-15	C1	Load Current Return
TB1-14	C3	Load Current Polarity
TB1-16	G	Neutral Light Common
TB1-5	R3	Raise Limit Switch
TB1-6	L3	Lower Limit Switch
TB1-11	NL	Neutral Light
TB1-12	DHR	Drag Hands Reset
TB2-5	HS	Motor Seal-In Input

NOTES:
1. Regulated voltage for load-side sense without Reverse Power Flow Option.
2. Regulated voltage for load-side sense with Reverse Power Flow Option.

WARNING: In no case should the line current circuit be interrupted with the regulator or transformer energized. Do not remove auxiliary current transformers without shorting the current inputs. Death or severe electrical shock can occur.

Figure 9 (B-1157) Cooper Wiring Harness with Gray Plug

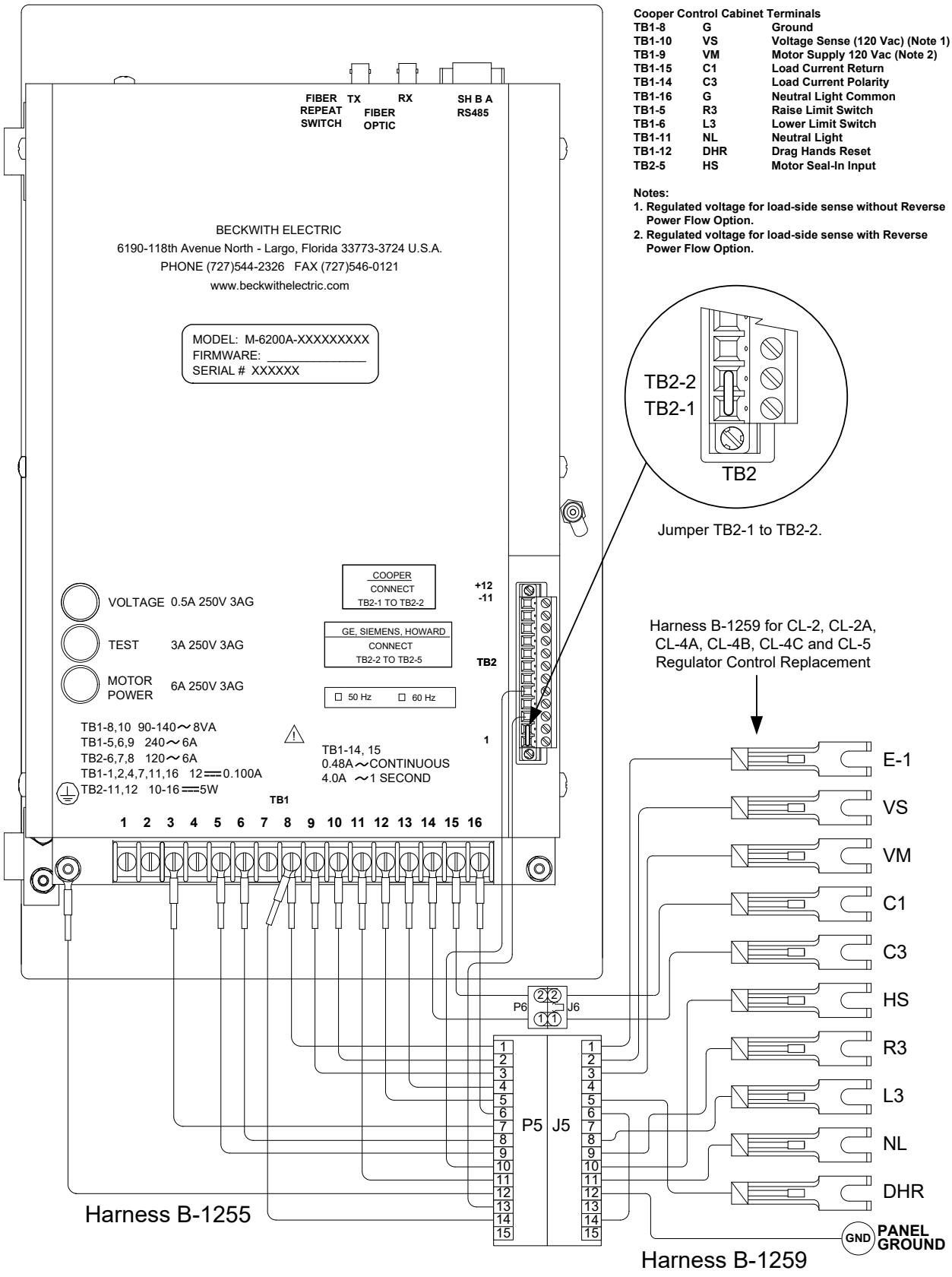

WARNING: In no case should the line current circuit be interrupted with the regulator or transformer energized. Do not remove auxiliary current transformers without shorting the current inputs. Death or severe electrical shock can occur.

Figure 10 B-2355-C3 (B-1255 and B-1259) Cooper Wiring Harness

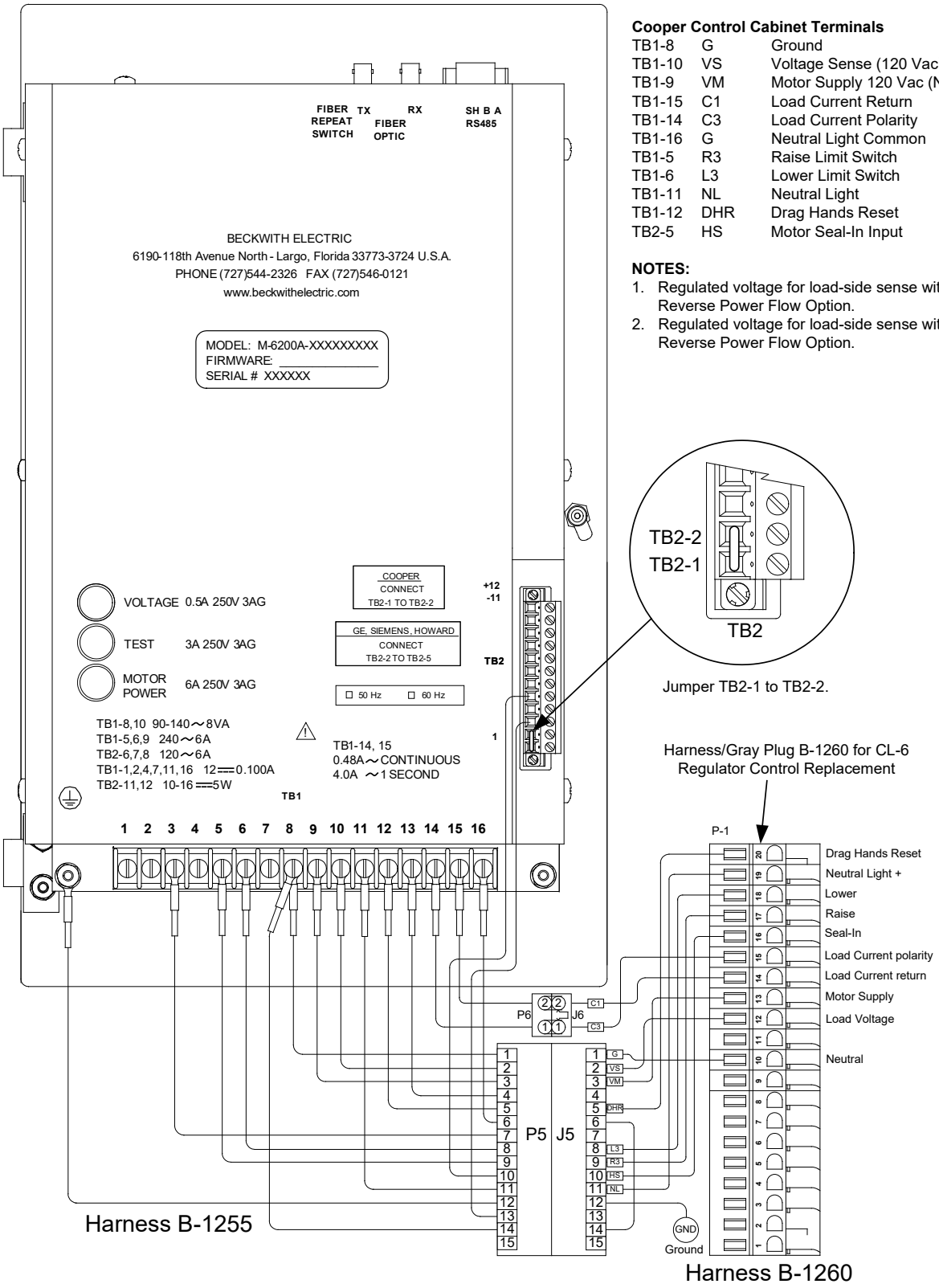

Cooper Control Cabinet Terminals

TB1-8	G	Ground
TB1-10	VS	Voltage Sense (120 Vac) (Note 1)
TB1-9	VM	Motor Supply 120 Vac (Note 2)
TB1-15	C1	Load Current Return
TB1-14	C3	Load Current Polarity
TB1-16	G	Neutral Light Common
TB1-5	R3	Raise Limit Switch
TB1-6	L3	Lower Limit Switch
TB1-11	NL	Neutral Light
TB1-12	DHR	Drag Hands Reset
TB2-5	HS	Motor Seal-In Input

NOTES:
1. Regulated voltage for load-side sense without Reverse Power Flow Option.
2. Regulated voltage for load-side sense with Reverse Power Flow Option.

WARNING: In no case should the line current circuit be interrupted with the regulator or transformer energized. Do not remove auxiliary current transformers without shorting the current inputs. Death or severe electrical shock can occur.

Figure 11 B-2355-C4 (B-1255 and B-1260) Cooper Wiring Harness

B-2355-C3/B-2355-C4 Hardware Kit Configuration

1. If the M-6200A to be configured has existing mounting hardware installed, then perform the following:
   a. Remove all hinges, latches, brackets, wiring harnesses and jumpers.
   b. Save/capture all removed hardware for future use.
2. Verify the contents of the B-2355-C3/B-2355-C4 Hardware Kit includes the items in Table 3:

Qty	Description	Beco Part #
1	Top Hinge Half-Female P2393	440-40923
1	Bottom Hinge Half-Female P2373	440-40913
1	Bracket P-2372 Panel Adap	441-41323
6	Screw, Fillister, 8-32 x 7/16	470-00830
1	Wire Harness, B-2355 (B-2355-1)	B-1259 (B-1260)
2	Fast Lead Screw	441-00385
2	Fastener, Screw, Retainer	440-00855
2	U-Clip	441-00386

Table 3 B-2355-C3 and B-2355-C4 Hardware Kit

3. Remove pre-cut label material from the four right side hinge mounting holes and the first and fourth (from top) left side hinge mounting holes as viewed from the front of the M-6200A panel.

■**NOTE:** Refer to Figure 7 for location and orientation of hardware kit items.

4. Mount the Bottom Hinge to the lower right side of the M-6200A, then secure (hand tight) the hinge utilizing an 8-32 x $^{7}/_{16}$ screw inserted into the captured fastener in the top hole.
5. Complete the Bottom Hinge installation with an 8-32 x $^{7}/_{16}$ screw inserted into the captured fastener in the bottom hole, then tighten the top screw.
6. Mount the Top Hinge to the upper right side of the M-6200A panel utilizing 8-32 x $^{7}/_{16}$ screws inserted into the captured fasteners.
7. Mount the Latch Bracket to the left side of the M-6200A panel utilizing 8-32 x $^{7}/_{16}$ screws inserted into the captured fasteners in the first and fourth hinge holes from the top.
8. Determine if the control is equipped with a B-1255 Universal Wiring Harness and proceed as follows:
   a. If the control has a B-1255 Universal Wiring Harness installed on TB1 and TB2, connect the applicable wiring harness B-1259 for B-2355-C3 or B-1260 for B-2355-C4 to the P-5 and P-6 connectors.
   b. If the control ***does not*** have a B-1255 Universal Wiring Harness installed on TB1 and TB2, then connect the B-1255 harness to TB1 and TB2 as indicated in Figure 10 or Figure 11 (refer to the terminal block torque requirements in Section 3). Connect the applicable wiring harness B-1259 for B-2355-C3 or B-1260 for B-2355-C4 to the P-5 and P-6 connectors.
9. Verify that a jumper is installed between TB2-1 and TB2-2.
10. Continue with "Installing the M-6200A in a Cooper Regulator" procedure earlier in this section.

5 Installing TapTalk

The TapTalk S-6200 installation program has been written to overwrite previous versions of TapTalk. However, considering variations in installed software, hardware and operating systems, if you are upgrading from a previous version of TapTalk, it is recommended that any older versions of the TapTalk program be removed before installing the new TapTalk.

TapTalk runs with the Windows operating system. Familiarity with Windows is important in using TapTalk, as the conventions defined in the Windows documentation are strictly followed.

TapTalk will be installed on the host PC's hard disk. While it does not require special installation procedures, an installation utility has been provided to make the process easier.

■**NOTE:** The installer must have Administrator rights on the computer that TapTalk is being installed on.

To install TapTalk:

1. Insert the TapTalk software into your CD-ROM drive.
2. Select **Run** from the **Start** Menu.
3. In the **Run** dialog box, initiate software installation by typing **D:\Setup.exe** (or other drive designator:\ Setup.exe, depending on the letter designation for the CD-ROM drive).
4. The Installation Wizard will prompt the user through the installation process. After installation, the TapTalk program icon (located in the Becoware folder) can be placed on the desktop (Figure 12).

Starting TapTalk

Select the TapTalk program-item icon from the Becoware group in the Program Manager, or select TapTalk from the program list using the **Start** Menu. The TapTalk Main Screen will be displayed.



Figure 12 TapTalk S-6200 Program Icon

INITIAL LOCAL COMMUNICATIONS USING DIRECT USB CONNECTION

To use TapTalk to interrogate, set, or monitor the M-6200A Digital Regulator Control using a direct USB connection, the appropriate driver must be loaded. This driver is automatically loaded by TapTalk installation software. If the host PC cannot identify the proper driver for the M-6200A, the driver file (beco.inf) can be found in the software installation folder: Program Files (x86)/BECOWare/TapTalk M-6200 Series Model S-6200/Default USB Drivers.

When the control is connected to the PC utilizing a USB cable, Windows will enumerate the control as a serial com device and will assign an unused COM Port to the control.

Direct Communication Using USB (Serial) Connection

1. Plug the USB cable into the host computer USB port.
2. Plug the USB cable into the USB port on the control. The host computer will interrogate the control to determine the type of hardware device it is.
3. Start the TapTalk program, TapTalk will display the TapTalk Startup screen.
4. Select **Communication/USB** from the "Communication" drop-down menu. TapTalk will display the USB Device screen (Figure 13).

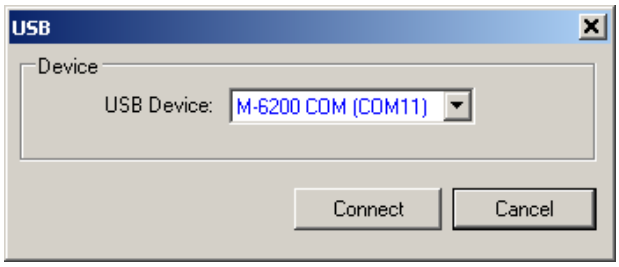

Figure 13 USB Device Connection Screen

5. Ensure that the correct USB device is displayed. Select **Connect**. If Communications Security is disabled, TapTalk will attempt to connect to the target control. If TapTalk returns a "Cannot Connect" error screen, verify the USB connections and retry the procedure.
6. When Communications Security is enabled, depending on the Security mode enabled in the control, TapTalk will display either the "Access Level Code" entry screen (Figure 14) or the "Log On – User Name and Password" entry screen (Figure 15).

   When **Access Level** communications security is enabled, enter Access Level Code. Default Values: Level 1=000000 (Disabled), Level 2=222222. Select **OK**. TapTalk will attempt to connect to the target control.

   When **IEEE 1686 Cyber Securit**y is enabled, enter a valid User Name and Password and select **Log On**. TapTalk will attempt to connect to the target control. If TapTalk returns a "User Access Permissions Denied" error screen, TapTalk will deny access until a valid User Name and Password are entered.

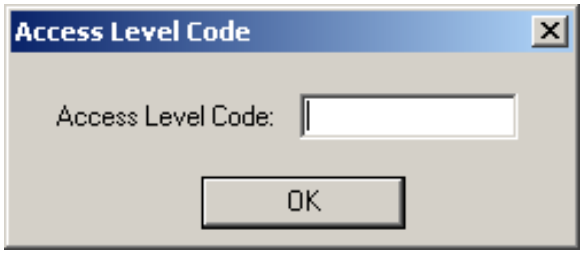

Figure 14 Access Level Code Entry Screen

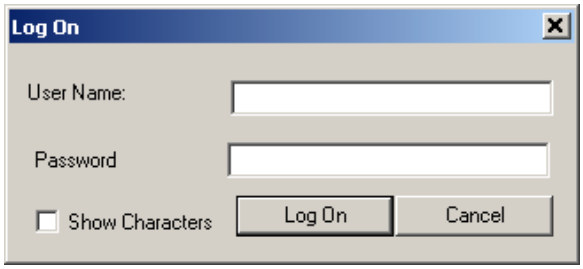

Figure 15 Log On – User Name and Password Entry Screen

7. When communication is established, TapTalk will briefly display an "Access Granted" screen followed by the "Connected through USB" confirmation screen. TapTalk will display the connected version of the TapTalk Main Screen. The USB connection name is displayed in the Connection Status area at the bottom right of the main screen.

A HMI Menus

A.1 HMI Menu Flow.....A–2
Figure A-1 Monitor Menu Flow.....A–2
Figure A-2 Setpoints Menu Flow.....A–3
Figure A-3 Configuration Menu Flow (1 of 2).....A–4
Figure A-4 Communication Menu Flow.....A–6
Figure A-5 Utilities Menu Flow.....A–7

■ CYBER SECURITY NOTE:

When Cyber Security is enabled, access to any feature described in this Chapter is subject to the Access Permissions Policy as designated by the Security Policy Administrator.

A.1 HMI Menu Flow



At any menu screen:

Press **EXIT** to go to the Menu Header.

Press either ← → to move sideways to the adjacent Menu Header.

Figure A-1 Monitor Menu Flow

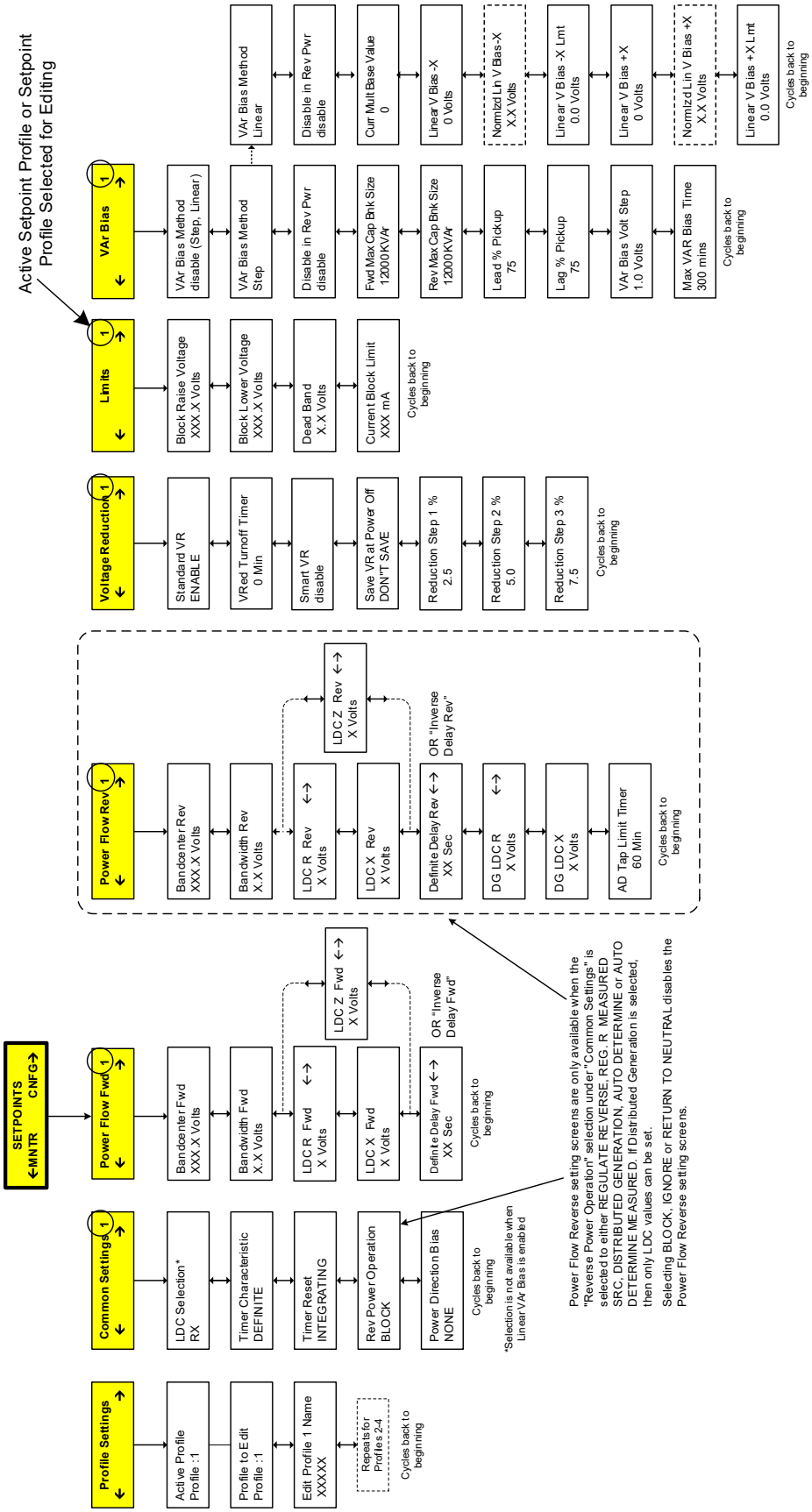

At any menu screen:

Press **EXIT** to go to the Menu Header.

Press either ← → to move sideways to the adjacent Menu Header.

Figure A-2 Setpoints Menu Flow

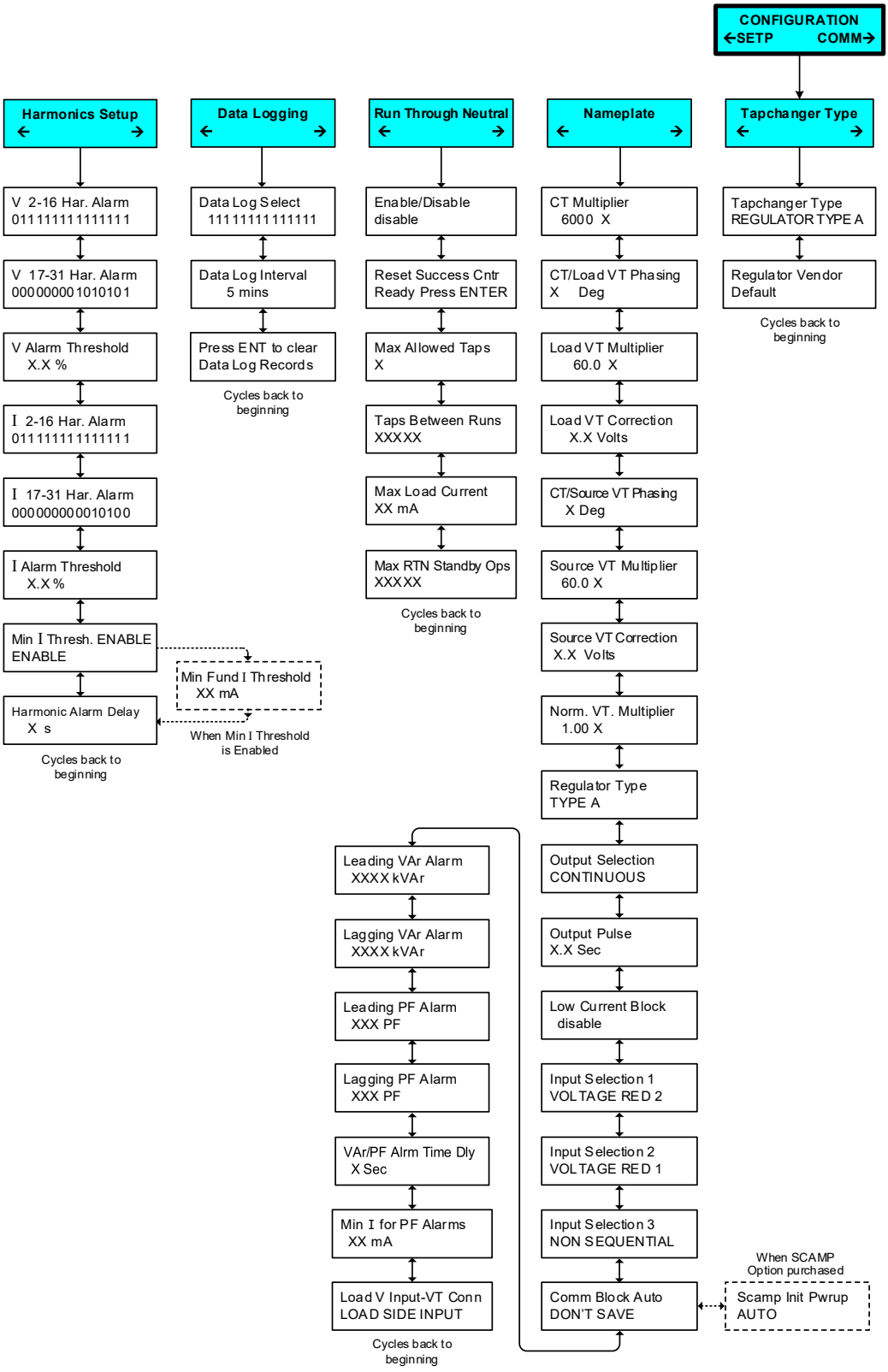

At any menu screen:

Press **EXIT** to go to the Menu Header.

Press either ← → to move sideways to the adjacent Menu Header.

Figure A-3 Configuration Menu Flow (1 of 2)

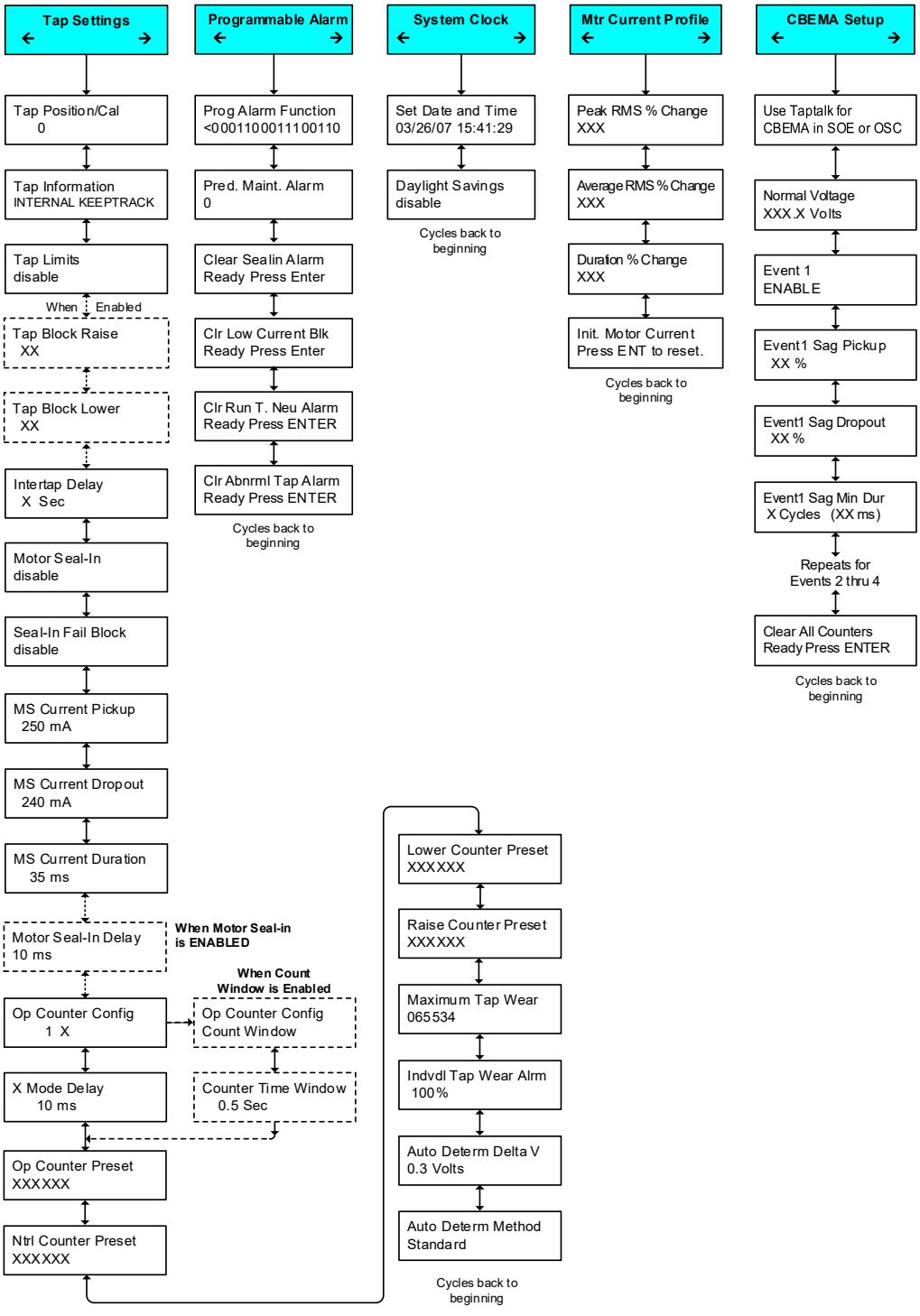

At any menu screen:

Press **EXIT** to go to the Menu Header.

Press either ← → to move sideways to the adjacent Menu Header.

Figure A-3 Configuration Menu Flow (2 of 2)

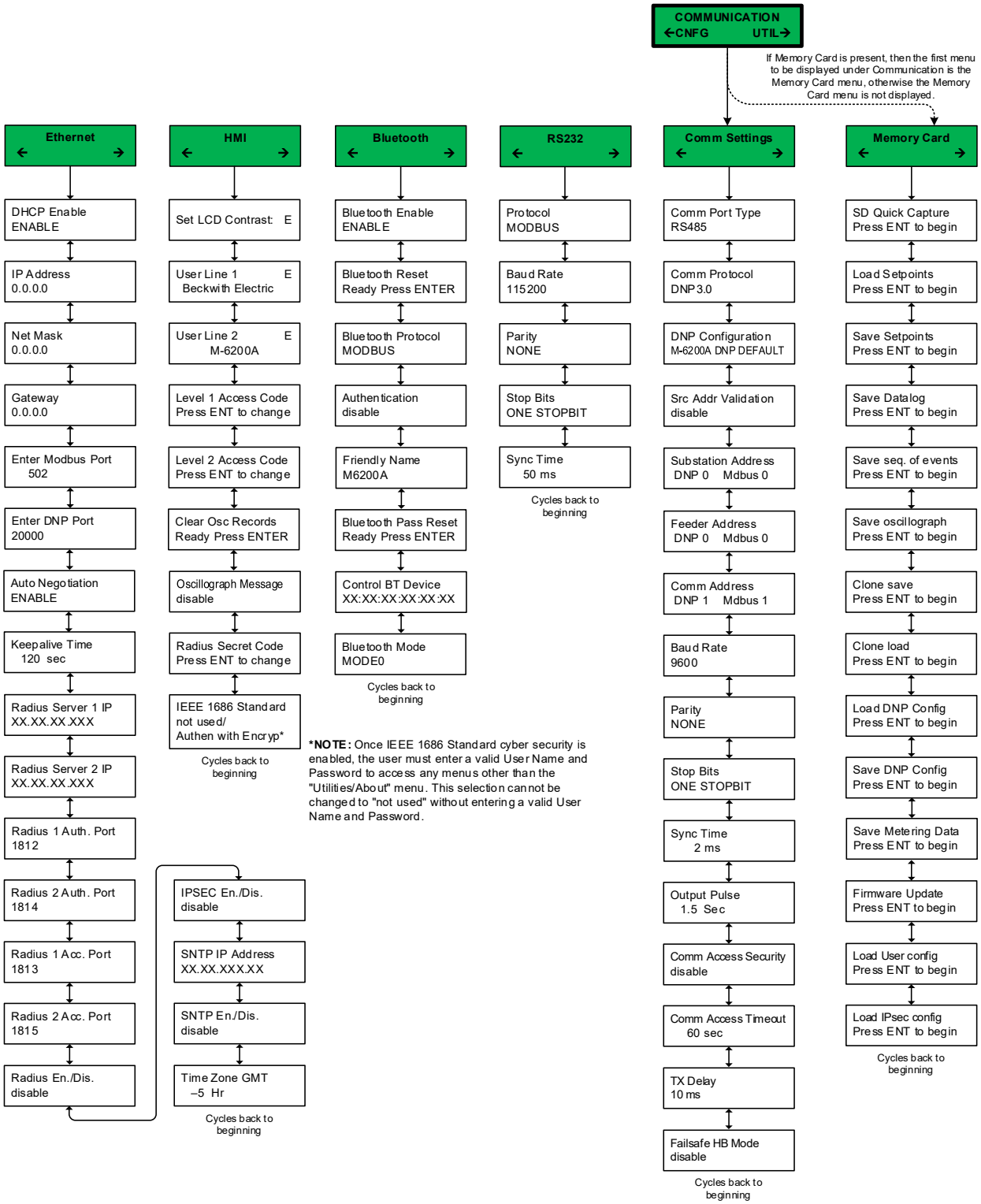

At any menu screen:

Press **EXIT** to go to the Menu Header.

Press either ← → to move sideways to the adjacent Menu Header.

Figure A-4 Communication Menu Flow

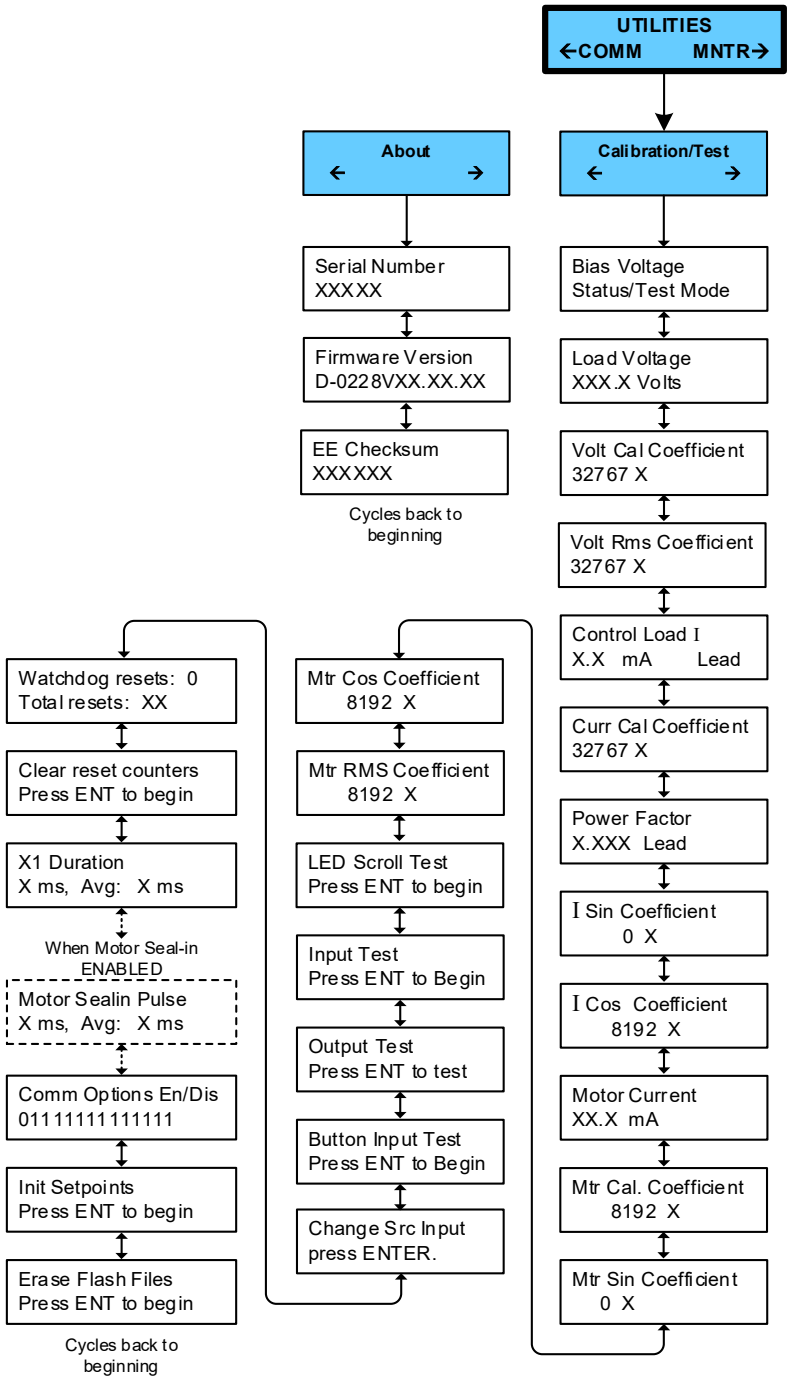

At any menu screen:

Press **EXIT** to go to the Menu Header.

Press either ← → to move sideways to the adjacent Menu Header.

Figure A-5 Utilities Menu Flow

This Page Left Intentionally Blank

Legal Information

Patent

The units described in this manual are covered by U.S. Patents, with other patents pending.

Buyer shall hold harmless and indemnify the Seller, its directors, officers, agents, and employees from any and all costs and expense, damage or loss, resulting from any alleged infringement of United States Letters Patent or rights accruing therefrom or trademarks, whether federal, state, or common law, arising from the Seller's compliance with Buyer's designs, specifications, or instructions.

Warranty

Seller hereby warrants that the goods which are the subject matter of this contract will be manufactured in a good workmanlike manner and all materials used herein will be new and reasonably suitable for the equipment. Seller warrants that if, during a period of ten years from date of shipment of the equipment, the equipment rendered shall be found by the Buyer to be faulty or shall fail to perform in accordance with Seller's specifications of the product, Seller shall at his expense correct the same, provided, however, that Buyers shall ship the equipment prepaid to Seller's facility. The Seller's responsibility hereunder shall be limited to replacement value of the equipment furnished under this contract.

Seller makes no warranties expressed or implied other than those set out above. Seller specifically excludes the implied warranties of merchantability and fitness for a particular purpose. There are no warranties which extend beyond the description contained herein. In no event shall Seller be liable for consequential, exemplary, or punitive damages of whatever nature.

Any equipment returned for repair must be sent with transportation charges prepaid. The equipment must remain the property of the Buyer. The afore-mentioned warranties are void if the value of the unit is invoiced to the Seller at the time of return.

Indemnification

The Seller shall not be liable for any property damages whatsoever or for any loss or damage arising out of, connected with, or resulting from this contract, or from the performance or breach thereof, or from all services covered by or furnished under this contract.

In no event shall the Seller be liable for special, incidental, exemplary, or consequential damages, including but not limited to, loss of profits or revenue, loss of use of the equipment or any associated equipment, cost of capital, cost of purchased power, cost of substitute equipment, facilities or services, downtime costs, or claims or damages of customers or employees of the Buyer for such damages, regardless of whether said claim or damages is based on contract, warranty, tort including negligence, or otherwise.

Under no circumstances shall the Seller be liable for any personal injury whatsoever.

It is agreed that when the equipment furnished hereunder are to be used or performed in connection with any nuclear installation, facility, or activity, Seller shall have no liability for any nuclear damage, personal injury, property damage, or nuclear contamination to any property located at or near the site of the nuclear facility. Buyer agrees to indemnify and hold harmless the Seller against any and all liability associated therewith whatsoever whether based on contract, tort, or otherwise. Nuclear installation or facility means any nuclear reactor and includes the site on which any of the foregoing is located, all operations conducted on such site, and all premises used for such operations.

Notice:

Any illustrations and descriptions by Beckwith Electric are for the sole purpose of identification.

The drawings and/or specifications enclosed herein are the proprietary property of Beckwith Electric, and are issued in strict confidence; therefore, shall not be used as a basis of reproduction of the apparatus described therein without written permission of Beckwith Electric.

No illustration or description contained herein shall be construed as an express warranty of affirmation, promise, description, or sample, and any and all such express warranties are specifically excluded nor shall such illustration or description imply a warranty that the product is merchantable or fit for a particular purpose. There shall be no warranties which extend beyond those contained in the Beckwith Electric terms of sale.

All rights reserved by Beckwith Electric. No reproduction may be made without prior written approval of the Company.

This Page Left Intentionally Blank

BECKWITH ELECTRIC
6190 118th Avenue North • Largo, Florida 33773-3724 U.S.A.
PHONE (727) 544-2326
beckwithelectricsupport@hubbell.com
www.beckwithelectric.com
ISO 9001:2015

© 2010 Beckwith Electric. All Rights Reserved.