BAE SA-OH-035-NP-S75G
BAE00PT

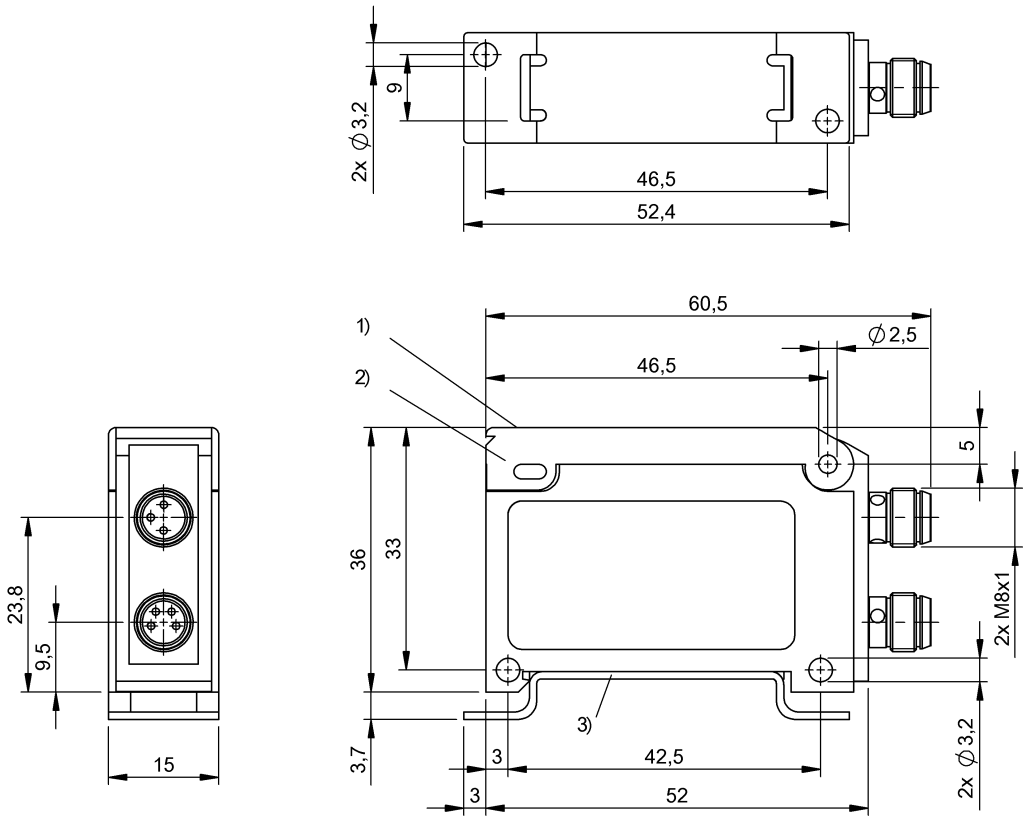

1) Display and control panel 2) Cover 3) DIN rail

CE

Display/Operation

Adjuster	Slide switch 4 pos. (1x)
Setting	Light-on/dark-on Time function on/off Delay time Teach mode Aut/Hys/Int/Pot

Electrical connection

Connection	M8x1-Connector, 4-pole
Contact, surface protection	Gold plated
Polarity reversal protected	yes
Short-circuit protection	yes

Electrical data

No-load current Io max. at Ue	45 mA
Operating voltage Ub	10…30 VDC
Rated operating current Ie DC	200 mA
Rated operating voltage Ue DC	24 V
Switching frequency	500 Hz
Turn-off delay toff max.	1 ms
Turn-on delay ton max.	1 ms
Voltage drop Ud max. at Ie	1.5 V

Environmental conditions

Ambient temperature	-10…55 °C
Protection type IEC 60529	IP54

General data

Additional features	Remote function for switching threshold Manual setting/fine adjustment via navigation menu
Approval/Conformity	CE
Basic standard	IEC 60947-5-2
Series	SA-OH
Style	Square Straight connection

Material

Housing material	ABS PC

Mechanical data

Dimension	15 x 36 x 61 mm

BAE SA-OH-035-NP-S75G
BAE00PT

Fastening detail	Screw M3 DIN rail 35 mm

Optical data

Principle of optical operation	depends on sensor head

Output/Interface

Duration of time function	T = 0…250 ms
Supplementary output	Error output NPN
Switch function, supplementary output	Normally open (NO)
Switching output	NPN Normally open/Normally closed (NO/NC)
Time function	switch-off delay Turn-on delay

Remarks

DIN rail included, order other accessories separately.
For additional information, refer to user's guide.
The sensor is functional again after the overload has been eliminated.

Connector view

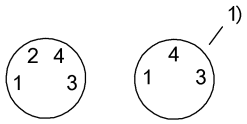

1) Sensor connection

Wiring Diagram

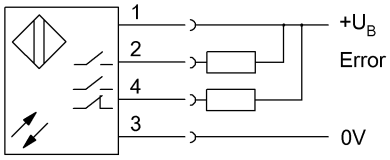

BAE SA-OH-035-NP-S75G
BAE00PT

Additional View

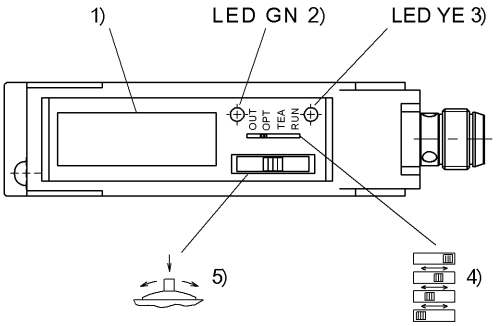

1) Display 2) Stability 3) Output function 4) Slide switch operating modes 5) Jog-Switch

Symbols for Optoelectronic Sensors

