BES 516-3019-S4-C
BES018Y

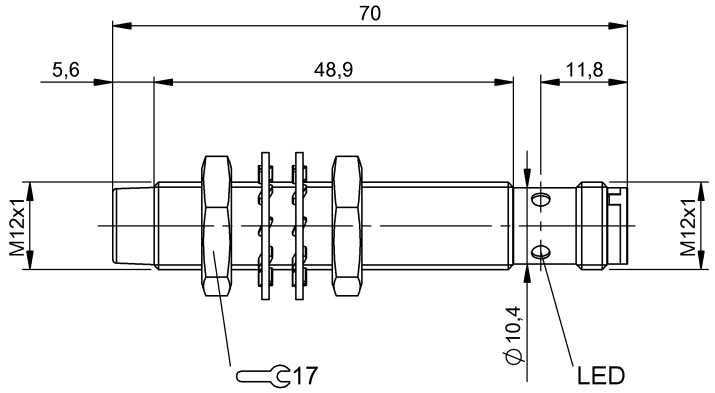

IND. CONT. EQ 81U2 for use in the secondary of a class 2 source of supply Environmental - Type 1 Enclosure

Display/Operation

Function indicator	yes
Power indicator	no

Electrical connection

Connection	M12x1-Connector, 4-pole, A-coded
Polarity reversal protected	yes
Short-circuit protection	yes

Electrical data

Hysteresis H max. (% of Sr)	15.0 %
Load capacitance max. at Ue	0.5 µF
MTTF (40 °C)	640 a
No-load current Io max., undamped	6 mA
Operating voltage Ub	10…30 VDC
Output resistance Ra	33.0 kOhm + D
Pollution degree	3
Protected against miswiring	yes
Rated insulation voltage Ui	250 V AC
Rated operating current Ie DC	200 mA
Rated operating voltage Ue DC	24 V
Rated short circuit current	100 A
Ready delay tv max.	21 ms
Repeat accuracy max. (% of Sr)	5.0 %
Residual current Ir max.	10 µA
Switching frequency	2500 Hz
Utilization category	DC -13
Voltage drop static max.	2.5 V

Environmental conditions

Ambient temperature	-40…85 °C
Protection class	II
Protection type IEC 60529	IP68

Functional safety

Diagnostic coverage	0 %
Functional safety	no
Mission Time	20 a

General data

Approval/Conformity	cULus, DC, Code 81U2 CE EAC
Basic standard	IEC 60947-5-2

Material

Housing material	Stainless steel
Material sensing surface	LCP

Mechanical data

Dimension	Ø 12 x 70 mm
Installation	non-flush
Size	M12x1
Tightening torque	12 Nm

Output/Interface

Switching output	PNP Normally closed (NC)

Range/Distance

Assured operating distance Sa	3.2 mm
Range	4 mm

BES 516-3019-S4-C
BES018Y

Rated operating distance Sn	4 mm
Ripple max. (% of Ue)	15 %
Temperature drift max. (% of Sr)	10 %

Remarks

The sensor is functional again after the overload has been eliminated.

For further information on MTTF/B10d, please refer to the MTTF / B10d Certificate.

Specification of the MTTF value and the B10d value do not represent any binding quality and/or life expectancy guarantees.

Connector view

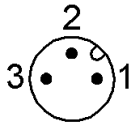

Wiring Diagram

