AVENTICS

PNEUMATIC DIRECTIONAL CONTROL VALVES

INDUSTRIAL TYPE

Pneumatics
It's that easy

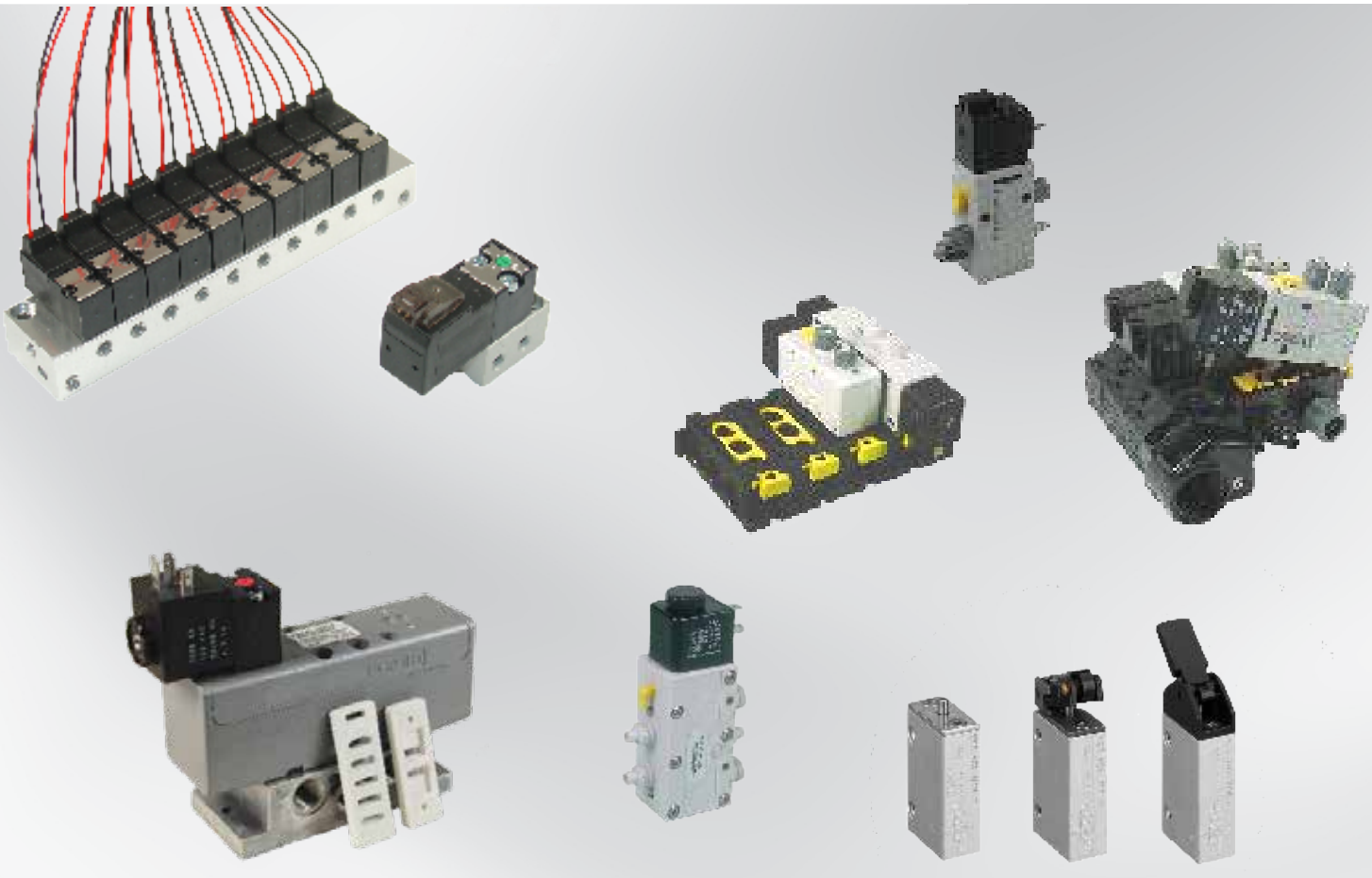

Slide Valves - Ceram™







Single subbase or manifold mounting - ISO 5599/1 Sizes 1, 2, 3 and 4

Direct Acting Valves - DO10-MR & DO15-MR



10mm width



15mm width

Poppet Valves



Series 830



Series 840 4-Way (inline/manifold)



Series 740 4-Way
(in-line or manifold)



Series AP 3 & 4-Way
(mechanical operators)



Rotair® Block 4-Way

Spool Valves



CD04 3 & 4-Way



CD07 4-Way



TaskMaster® 4-Way



PowerMaster® 4-Way

Many other pneumatic directional control valves are available - see the selection on our Directional Control Valve Features Chart on the inside back cover of this catalog. Catalogs can be downloaded from www.aventics.com/us or request a catalog on a specific product at info.us@aventics.com.

www.aventics.com/us

AVENTICS is online and ready to serve you. Our website supplies valuable information and resources 24 hours a day: everything from online catalogs and .pdf files, to CAD files, energy savings calculators, circuit drawings, product calculation programs and configurators, along with details about our Quick Ship Focused Delivery Program. Use our product configurators to design your own custom valve manifolds, cylinders, air prep assemblies and automation systems.

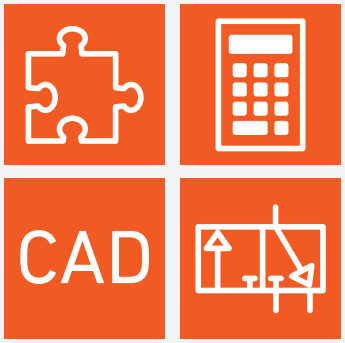

TABLE OF CONTENTS PAGE

Slide Valves

Ceram™ 4-way Directional Slide Valves (sliding ceramic plates)…….. 5
ISO 5599/1sizes 1, II, III & IV, 1/4”, 3/8”, 3/4” & 1” port size. C_v = 1.1, 2.4, 4.3, & 7.5. Subbase and manifold mounted 4-way 2 and 3 position solenoids & air pilot operators.

Direct Operated Valves

Series DO10-MR 2/2 and 3/2 valves, 10 mm body width, C_v = .014……. 39
Series DO15-MR 2/2 and 3/2 valves, 15 mm body width, C_v up to 0.05…….. 44

Poppet Valves

Series 830™ 3-Way Directional Poppet Valve…….. 50
1/8” NPT or 10-32 port size, C_v =0.06 with 3 SCFM @ 150 psi, locking manual override, manifold capabilities, strain relief connector included with valve.

Series 840™ 4-Way Directional Poppet Valve…….. 51
Polyacetal construction. Built-in tube fittings for 1/4” O.D. tubing. C_v = 0.2. Single and double solenoid, plus single and double air pilot operators. Inline or modular manifold.

Series 740™ 4-Way Directional Poppet Valve…….. 56
Polyacetal construction. Integral tube fittings for 1/4” and 5/16” O.D. tubing. C_v = 0.7. Single and double solenoid, plus single and double air pilot operators. Built-in exhaust flow controls in two position valves. Inline or modular manifold system.

Series AP 3-Way and 4-Way Directional Poppet Valves……. 66
3/2 and 4/2 mechanically operated valves with flows up to 0.60 C_v. Operators include plunger, roller, pushbutton, roller lever, lever, control panel installation versions.

Rotair® Block 4-Way Directional Poppet Valve…….. 80
1/8”, 1/4” & 3/8” NPT port sizes. C_v = 1.0, 1.1 & 1.2. 4-way, 2 and 3 position, detented, handle operated, closed and exhaust open center.

Spool Valves

Series CD04 4-Way Directional Spool Valve……. 82
1/8” PTF and G1/8 ported 5/2 valves, 0.9 C_v. Single and double solenoid, single and double air pilot, plus mechanical operators.

Series CD07 4-Way Directional Spool Valve……. 110
1/4” NPT ported valves, 1.1 C_v. 4-way, two and three position solenoid, manual and air pilot operated. Standard and explosion proof operators available.

TaskMaster® 4-Way Directional Spool Valve……. 120
1/4” and 3/8” NPT subplate models. C_v = 1.0. 4-way function, solenoid, air pilot, lever and button operators.

PowerMaster® 4-Way Directional Spool Valve……. 124
1/4” , 3/8”, 1/2”, 1” & 1-1/4” NPT port sizes. C_v ranges from 2.39 to 15.75. Tapped body models. Solenoid, air pilot and mechanical operators.

Technical Section

Valve Diagrams, Application Sketches, Sizing Guide, etc…….. 132
Including vacuum and dual pressure applications, metric conversion chart.

Solenoid Connectors……. 145
Electrical Hook-up Information; Cables…….. 146
Surge Suppression……. 147

Valve Features Summary Chart……..... 148

Ceram™ Valves, ISO 5599-1 Sizes 1-4
Index

TABLE OF CONTENTS	PAGE
Specifications and features	5-6
Model number identification	7
Single solenoid, metal spring return	8
Single solenoid, air spring return	9
Double solenoid, 5/2	10
Single air pilot, metal and air spring return	11
Double air pilot, 5/2	12
Double solenoid, 5/3, closed center	13
Double solenoid, 5/3, exhaust open center	14
Double air pilot, 5/3, closed center and exhaust open center	15
cURus approved operators	16
Externally piloted valves without coil	16
CSA approved operator: 3 or 5 pin connections	17
4 pin M12 connections	18
CSA appr. operator, single 4/5 pin conn. for dbl. solenoid valves	19
Explosion proof and intrinsically safe solenoid valves	20
Repair kits and parts	21
Subbase and manifolds, Size 1	22
Manifold accessories, Size 1	23-24
Subbase and manifolds, Size 2	25
Manifold accessories, Size 2	26-27
Subbase and manifolds, Size 3	28
Manifold accessories, Size 3	29
Subbase and manifolds, Size 4	30-31
Subbase and manifold accessories, Size 4	31
Air pilot valve manifolds, Size 1-3	32-34
Pressure gauges for sandwich regulators	35
Internal to external pilot field conversion, Sizes 1 and 2	36
Internal to external pilot field conversion, Sizes 3 and 4	37
Piping procedures	38

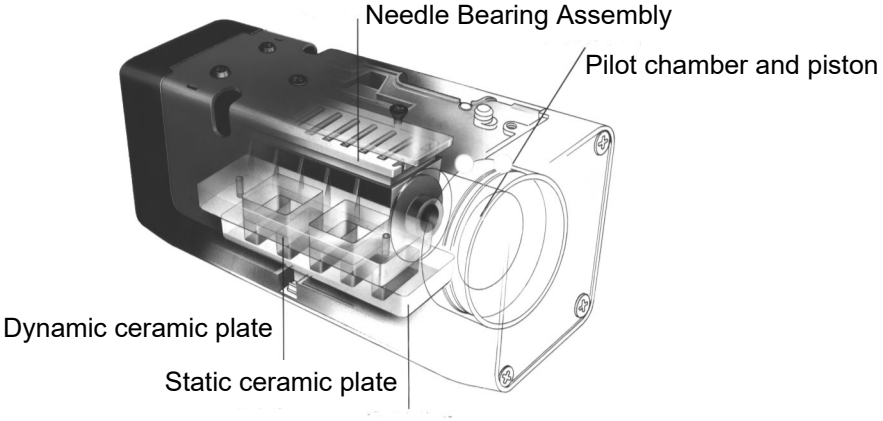

Ceram™ Valves, ISO 5599-1 Sizes 1-4

Specifications and features

Specified by industries that demand tough valves due to their harsh operating environment. Ceram™ valves are very prevalent in industries where ordinary valves just don't last. Industries such as: tire plants, foundries, paper mills, steel plants, concrete batch plants, sawmills, plywood and board plants, automotive assembly, glass manufacturers, rubber and plastics, sheet metal fabrication, etc.

Eliminate downtime—they don't stick
Normal air valves can stick or jam and cause start -up problems because of their inability to handle accumulations of dir, dust, oil or water in air lines. Not with the Ceram valve**.** There's no gap between the plates for dirt and oil to accumulate. The plates are finished so precise that they act like sliding magnets or jo blocks. Solenoid operators of the same voltage on standard valves are interchangeable between all sizes, reducing spare parts inventory and downtime.

They work great in normal applications too
Just because they are so popular in harsh environments, don't think they won't work great in a more normal application.

Ceram valves save air and money
The tight shut-off with Ceram valves eliminates costly loss of air that is common in other designs. Compressed air that you pay for.

Overcomes design limitations of other valves
Lapped spool valves normally have a small gap between spool and sleeve that is prone to oil and dirt accumulation, resulting in sticking and the waste of air. Packed spool valves using elastomer seals are subject to deterioration and excessive wear when contamination and/or incompatible lubricants are present.

Extended life
Years of proven field service verifies an anticipated life of 150 million cycles even under adverse conditions.

World Standard ISO mounting
ISO 5599/1 mounting dimensions mean that wherever you send it, it's interchangeable with other ISO valves. Four basic valves sizes - ISO 1 through 4 with subbases or manifolds with NPT or ISO G (BSPP) ports.

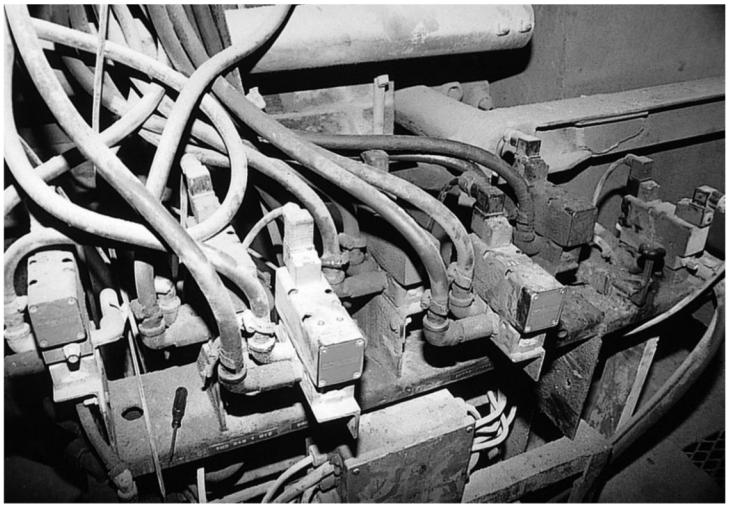

Concrete batching plant application. Ceram valves withstand harsh conditions and dirty air without "sticking".

Valve Sizes/Specifications

Valve Size	Ports NPT, ISO G(BSPP)	C_v	S.C.F.M.*
Size 1	1/4", 3/8"	1.1	40 SCFM
Size 2	3/8", 1/2"	2.4	86 SCFM
Size 3	1/2", 3/4"	4.3	155 SCFM
Size 4	3/4",1"	7.5	269 SCFM

*Flow measured with 87 psi (6 bar) supply pressure and 14.5 psi (1 bar) pressure drop across the valve.

Ceram™ Valves, ISO 5599-1 Sizes 1-4

Specifications and features

Summary of Specifications For Ceram Valves

TECHNICAL DATA:

Port Sizes: 1/4" - 3/8" ISO Size 1, 3/8" - 1/2" ISO Size 2
1/2" - 3/4" ISO Size 3, 3/4" - 1" ISO Size 4

Working Pressure: 0 to 150 PSI (0 to 10.3 bar)
(Intrinsically Safe versions: Maximum internal pilot valve pressure is 115 PSI or 7.9 bar)
Vacuum applications: to 24" Hg



ISO I pictured

Pilot Pressure: SIZES 1 & 2
29 PSI (2.0 bar) minimum, all 2 position valves
44 PSI (3.0 bar) minimum, all 3 position valves
150 PSI (10.3 bar) maximum
(Intrinsically Safe versions: Maximum external pilot pressure is 115 PSI or 7.9 bar)
SIZES 3 & 4
36 PSI (2.5 bar) minimum, all 2 position valve
44 PSI (3.0 bar) minimum, all 3 position valve
150 PSI(10.3 bar) maximum
(Intrinsically Safe versions: Maximum external pilot pressure is 115 PSI or 7.9 bar)

Flow:

Valve Size	1	2	3	4
C_v	1.1	2.4	4.3	7.5
Nl/min	1100	2400	4300	7500

Temperature Range:
Solenoid Valves: +5°F to +150°F (-15°C to 66°C)
(-10°F or –23°C operation possible with low temperature solenoid operators. Available for 2-position double solenoid and air Spring return valves.)
Air Pilot Valves: -10°F to +175°F (-23°C to 79°C)

Media: Air, either Lubricated or Non-lubricated
Service Life: over 150 million Cycles with or without Line Lubrication
Material: Body - Die Cast Anodized Aluminum (Sizes 2 - 4)
Die Cast Zinc (Size 1)
Valve Elements - Ceramic Slide Plates (Al_2O_3)
Combination Manual Override:
Explosion-proof models: Non-locking only
Other models: Locking & Non-Locking sizes 1 - 4 (3 and 4: Oct. '92 & later)
Non-Locking sizes 3 & 4 (Prior to Oct. '92)

ELECTRICAL DATA:

ISO Valve Size	Standard Voltages (All coils are rated for continuous duty)	Power Consumption	
		Inrush	Holding
1 and 2 (3 and 4 Oct. '92 and later)	24 VAC - 50/60 Hz 110 VAC - 50 Hz/120 VAC - 60 Hz 220 VAC - 50 Hz/240 VAC - 60 Hz	6.4 VA	3.7 VA
	12, 24 VDC	2.7 W	
3 and 4 (Prior to Oct. '92)	120, 240 VAC (50/60 Hz)	15.6 VA	9.4 VA
	12, 24 VDC	6.1 W	

Voltage Tolerance: +/- 10% (Except for Explosion proof and Intrinsically safe solenoids.)
All standard valves are rated for NEMA 4.
SOLENOID CONNECTORS AND SUBBASES:
Plug-in solenoid connectors conform to DIN standard #43650 and must be ordered separately. **Order one connector per solenoid.**
Connector options Include strain relief and one-half inch (1/2") conduit. Both are available in Lighted and non-lighted versions. 1/2" conduit connector also available in metallic version; see page main solenoid connectors page. Subbases, manifold and accessories are ordered separately.

FEATURES

- Ceramic plates guaranteed for life of valve
- Sliding ceramic plates form seal
- Operates with or without line lubrication
- Interchangeable with other ISO valves
- Expected service life exceeds 150 million cycles
- NEMA 4 Standard
- Sub-bases and manifolds available 1/4" thru 1" NPT ISO G1/8 to G1 piping
- Wide range of accessories, including sandwich speed controls and regulators
- Explosion-proof and intrinsically safe solenoids available.
- Brad Harrison® Connector Solenoids
- cURus (Dual CSA / UL Recognized) solenoids

Ceram™ Valves, ISO 5599-1 Sizes 1-4
Model code identification

Model Code Identification

GX - 0X 00 X X - OPERATORS "14" END "12" END

G	X	0	X	(SIZE)	00	X	(DESCRIPTION)	X	(Solenoid Arrangement)
4-Way, 5-Ported CERAM Valve	S or T	0	1	ISO 1	3rd and 4th digits are always zero	1	3 Position Valves, Exhaust Open Ctr. Ext. Pilot	0	None
	S	0	2	ISO 2		2	3 Position Valves, Closed Ctr. Ext. Pilot	1	Single Solenoid
		0	3	ISO 3		3	3 Position Valves, Exhaust Open Ctr. Int. Pilot	2	Double Solenoid
		0	4	ISO 4		4	3 Position Valves, Closed Ctr. Internal Pilot		
						5	2 Position Valves, Ext. Pilot		
						6	2 Position Valves, Int. Pilot		

VALVE OPERATORS

02	•	2 or 3 Positon ANSI 4 pin MicroConnection 24 VDC
03	•	2 or 3 Position ANSI 3 pin MiniConnection 120 VAC 50/60 Hz
05	•	2 or 3 Position ANSI 5 pin MiniConnection 120 VAC 50/60
06	•	2 or 3 Position ANSI 3 pin MiniConnection 24 VDC
07	•	2 or 3 Position ANSI 5 pin Mini.Dbl.Sol/Sgl.Conn.120 VAC 50/60 Hz
08	•	2 or 3 Position ANSI 5 pin Mini.Dbl.Sol/Sgl.Conn.24 VDC
09	•	2 or 3 Position ANSI 4 pin Micro.Dbl.Sol/Sgl.Conn.24 VDC
10	•	2 or 3 Position ANSI 5 pin MiniConnection 24 VDC
11		2 Position Low Temp Operator 120 VAC 50/60 Hz
13		2 Position Low Temp Operator 24 VDC
14		2 Position 240 VAC 50/60 Hz Low Temp
15		2 or 3 Position 12 VAC 50/60 Hz
16		2 or 3 Position 480 VAC 50/60 Hz or 253 VDC
17		2 or 3 Position 36 VDC
18		2 or 3 Position 76 VDC
19		2 or 3 Position 125 VDC
20		2 or 3 Position 24 VDC 2.1 W (For Contact Bridge)
24		2 Position 120 VAC 50/60 Hz
26		3 Position with Centering Springs 120 VAC 50/60 Hz
27		2 Position 240 VAC 50/60 Hz
29		3 Position with Centering Springs 240 VAC 50/60 Hz
33		Air Pilot—2 Position Valves
35		Air Pilot with Centering Springs—3 Position Valves
36		2 Position 12 VDC
38		3 Position with Centering Springs 12 VDC
39		2 Position 24 VDC
40	†	Metal Spring Return
41		3 Position with Centering Springs 24 VDC
43		Explosion Proof 2 Position 120 VAC 50/60 Hz
46		Explosion Proof 2 Position 24 VDC
49		Explosion Proof 2 Position 240 VAC 50/60 Hz
51	†	Air Spring Return
53		Explosion Proof 3 Pos. w/ Centering Springs 120 VAC 50/60 Hz
56		Explosion Proof 3 Pos. w/ Centering Springs 24 VDC
57		2 or 3 Position cURus 120 VAC 50/60 Hz (dual UR/CSA)
58		2 or 3 Position cURus 24 VDC (dual UR/CSA)
59		Explosion Proof 3 Pos. w/ Centering Springs 240 VAC 50/60 Hz
61		2 Position 24 VAC 50/60 Hz
62		3 Position with Centering Springs 24 VAC 50/60 Hz
90		2 or 3 Position Factory Mutual Approved Intrinsically Safe 24 VDC

• ANSI Connection universally known as Brad Harrison®.

† Used on "12" end only.

NOTE: The previous version of the GS series was the GA series. The GS valves are direct functional/dimensional replacements for the previous GA series. Size I valves are now GT series, and are direct functional/dimensional replacements. Also, there are various special CERAM valves which have old part numbers that begin with "P" (such as P –069431-00001). Effective April 2008, part numbers begin with "R" and are 10 digits. For online part number crossover: www.aventics.com/us/downloads

Ceram™ Valves, ISO 5599-1 Sizes 1-4

Single solenoid, metal spring return

5 Port / 2 Position
Single Solenoid, Metal Spring Return
Subbase Mounted (ISO Standard 5599/1)

Combination Manual Override: Locking & Non-Locking
Sizes 1-4

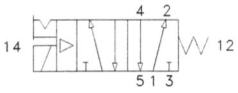



Choose valve first, solenoid connector next (see Solenoid Connectors page), then matching subbase or manifold components.

ISO Size	Voltage	Valve Part Number*	Valve Model Number	Flow Cv (Nl/min)	Valve Weight lbs. (kg)	Single Subbase (Side Ported)	Port Size	Subbase Weight lbs. (kg)
	110V-50Hz/120V-60Hz	R432006435	GT-010061-02440					
	220V-50Hz/240V-60Hz	R432006437	GT-010061-02740					
1	12 VDC	R432006439	GT-010061-03640			R432031844	1/4"-18	
	24 VDC	R432006441	GT-010061-03940	1.1 (1100)	2.15 (0.98)	R432036353	3/8"-18	0.76 (0.34)
	24 VAC	R432006448	GT-010061-06140					
	without coil	R432002477	GT-010061-00040					
	110V-50Hz/120V-60Hz	R432006124	GS-020061-02440					
	220V-50Hz/240V-60Hz	R432006126	GS-020061-02740					
2	12 VDC	R432006128	GS-020061-03640			R432031845	3/8"-18	
	24 VDC	R432006130	GS-020061-03940	2.4 (2400)	3.70 (1.68)	R432036356	1/2"-14	1.25 (0.57)
	24 VAC	R432006136	GS-020061-06140					
	without coil	R432002447	GS-020061-00040					
	110V-50Hz/120V-60Hz	R432006238	GS-030061-02440					
	220V-50Hz/240V-60Hz	R432006240	GS-030061-02740					
3	12 VDC	R432006242	GS-030061-03640			R432015308	1/2"-14	
	24 VDC	R432006243	GS-030061-03940	4.3 (4300)	4.18 (1.90)	R432015309	3/4"-14	1.85 (0.84)
	24 VAC	R432030344	GS-030061-06140					
	without coil	R432002457	GS-030061-00040					
	110V-50Hz/120V-60Hz	R432006321	GS-040061-02440					
	220V-50Hz/240V-60Hz	R432006323	GS-040061-02740					
4	12 VDC	R432006325	GS-040061-03640	7.5 (7500)	4.61 (2.09)	R432031847	1"- 11-1/2	2.75 (1.25)
	24 VDC	R432006326	GS-040061-03940					
	24 VAC	R432030177	GS-040061-06140					
	without coil	R432002467	GS-040061-00040					

Note: All valves listed above come from the factory internally piloted. To order an externally piloted valve, change the 7th character in the model number (not counting dashes), from 6 to 5. For example, model GT-010061-02440 would become GT-010051-02440. For externally piloted valves less coil, see page 16.
*Consult factory for voltages not listed.

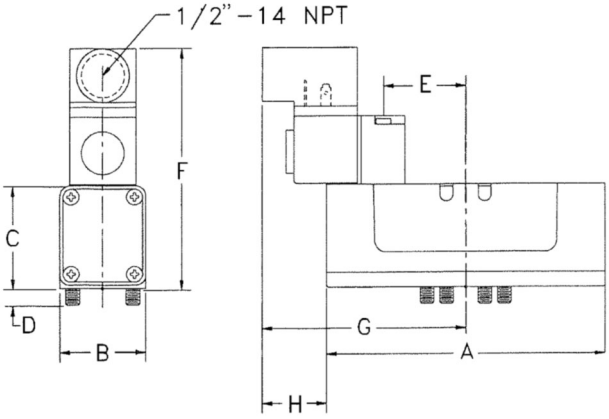

Dimensions

Note: solenoid connector shown for reference only.

Size	A		B		C		D	
	IN	mm	IN	mm	IN	mm	IN	mm
1	5.12	130.0	1.57	40.0	1.89	48.0	.31	8.0
2	5.82	147.8	2.03	51.6	2.30	58.4	.39	10.0
3	7.54	191.5	2.71	68.9	2.59	65.8	.41	10.4
4	8.62	218.9	3.09	78.5	2.89	73.4	.41	10.4

Size	E		F		G		H	
	IN	mm	IN	mm	IN	mm	IN	mm
1	1.52	38.5	4.53	115.1	3.48	88.5	1.20	30.5
2	1.57	40.0	4.90	124.5	3.54	90.0	.92	23.4
3	1.62	41.3	5.23	132.8	4.18	106.2	1.05	26.7
4	1.62	41.3	5.32	135.1	6.65	169.0	.68	17.3

Ceram™ Valves, ISO 5599-1 Sizes 1-4

Single solenoid, air spring return

5 Port / 2 Position
Single Solenoid, Air Spring Return
Subbase Mounted (ISO Standard 5599/1)

Combination Manual Override: Locking & Non-Locking
Sizes 1-4

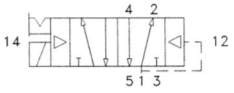



Choose valve first, solenoid connector next (see Solenoid Connectors page), then matching subbase or manifold components.

ISO Size	Voltage	Valve Part Number*	Valve Model Number	Flow Cv (Nl/min)	Valve Weight lbs. (kg)	Single Subbase (Side Ported)	Port Size	Subbase Weight lbs. (kg)
	110V-50Hz/120V-60Hz	R432006436	GT-010061-02451					
	220V-50Hz/240V-60Hz	R432006438	GT-010061-02751					
1	12 VDC	R432006440	GT-010061-03651			R432031844	1/4"-18	
	24 VDC	R432006442	GT-010061-03951	1.1 (1100)	2.15 (0.98)	R432036353	3/8"-18	0.76 (0.34)
	24 VAC	R432006449	GT-010061-06151					
	without coil	R432002478	GT-010061-00051					
	110V-50Hz/120V-60Hz	R432006125	GS-020061-02451					
	220V-50Hz/240V-60Hz	R432006127	GS-020061-02751					
2	12 VDC	R432006129	GS-020061-03651			R432031845	3/8"-18	
	24 VDC	R432006131	GS-020061-03951	2.4 (2400)	3.70 (1.68)	R432036356	1/2"-14	1.25 (0.57)
	24 VAC	R432006137	GS-020061-06151					
	without coil	R432002448	GS-020061-00051					
	110V-50Hz/120V-60Hz	R432006239	GS-030061-02451					
	220V-50Hz/240V-60Hz	R432006241	GS-030061-02751					
3	12 VDC	R432030345	GS-030061-03651			R432015308	1/2"-14	
	24 VDC	R432006244	GS-030061-03951	4.3 (4300)	4.18 (1.90)	R432015309	3/4"-14	1.85 (0.84)
	24 VAC	R432030343	GS-030061-06151					
	without coil	R432002458	GS-030061-00051					
	110V-50Hz/120V-60Hz	R432006322	GS-040061-02451					
	220V-50Hz/240V-60Hz	R432006324	GS-040061-02751					
4	12 VDC	R432030378	GS-040061-03651	7.5 (7500)	4.61 (2.09)	R432031847	1"- 11-1/2	2.75 (1.25)
	24 VDC	R432006327	GS-040061-03951					
	24 VAC	R432030352	GS-040061-06151					
	without coil	R432002468	GS-040061-00051					

Note: All valves listed above come from the factory internally piloted. To order an externally piloted valve, change the 7th character in the model number (not counting dashes), from 6 to 5. For example, model GT-010061-02451 would become GT-010051-02451. For externally piloted valves less coil, see page 16.
*Consult factory for voltages not listed.

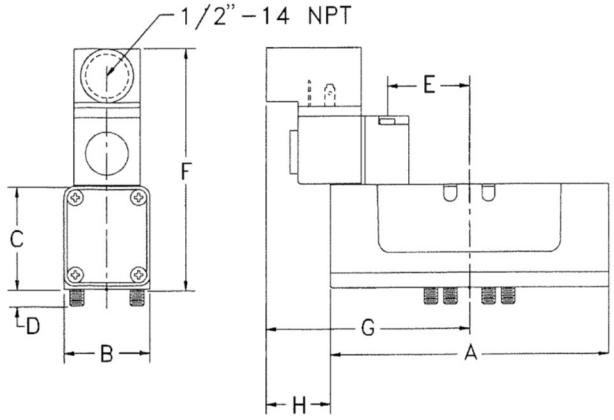

Dimensions

Note: solenoid connector shown for reference only.

Size	A		B		C		D	
	IN	mm	IN	mm	IN	mm	IN	mm
1	5.12	130.0	1.57	40.0	1.89	48.0	.31	8.0
2	5.82	147.8	2.03	51.6	2.30	58.4	.39	10.0
3	7.54	191.5	2.71	68.9	2.59	65.8	.41	10.4
4	8.62	218.9	3.09	78.5	2.89	73.4	.41	10.4

Size	E		F		G		H	
	IN	mm	IN	mm	IN	mm	IN	mm
1	1.52	38.5	4.53	115.1	3.48	88.5	1.20	30.5
2	1.57	40.0	4.90	124.5	3.54	90.0	.92	23.4
3	1.62	41.3	5.23	132.8	4.18	106.2	1.05	26.7
4	1.62	41.3	5.32	135.1	6.65	169.0	.68	17.3

Ceram™ Valves, ISO 5599-1 Sizes 1-4

Double solenoid, 5/2

5 Port / 2 Position
Double Solenoid
Subbase Mounted (ISO Standard 5599/1)

Combination Manual Override: Locking & Non-Locking
Sizes 1-4

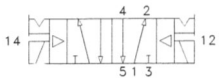

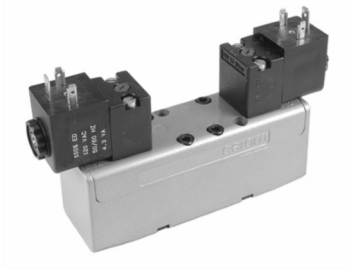

Choose valve first, solenoid connector next (see Solenoid Connectors page), then matching subbase or manifold components.

ISO Size	Voltage	Valve Part Number*	Valve Model Number	Flow Cv (Nl/min)	Valve Weight lbs. (kg)	Single Subbase (Side Ported)	Port Size	Subbase Weight lbs. (kg)
1	110V-50Hz/120V-60Hz	R432006471	GT-010062-02424	1.1 (1100)	3.21 (1.46)	R432031844 R432036353	1/4"-18 3/8"-18	0.76 (0.34)
	220V-50Hz/240V-60Hz	R432006472	GT-010062-02727					
	12 VDC	R432006473	GT-010062-03636					
	24 VDC	R432006474	GT-010062-03939					
	24 VAC	R432006478	GT-010062-06161					
	without coil	R432002479	GT-010062-00000					
2	110V-50Hz/120V-60Hz	R432006156	GS-020062-02424	2.4 (2400)	4.75 (2.15)	R432031845 R432036356	3/8"-18 1/2"-14	1.25 (0.57)
	220V-50Hz/240V-60Hz	R432006157	GS-020062-02727					
	12 VDC	R432030350	GS-020062-03636					
	24 VDC	R432006158	GS-020062-03939					
	24 VAC	R432006162	GS-020062-06161					
	without coil	R432002449	GS-020062-00000					
3	110V-50Hz/120V-60Hz	R432006265	GS-030062-02424	4.3 (4300)	4.99 (2.26)	R432015308 R432015309	1/2"-14 3/4"-14	1.85 (0.84)
	220V-50Hz/240V-60Hz	R432006266	GS-030062-02727					
	12 VDC	R432030342	GS-030062-03636					
	24 VDC	R432006267	GS-030062-03939					
	24 VAC	R432030341	GS-030062-06161					
	without coil	R432002459	GS-030062-00000					
4	110V-50Hz/120V-60Hz	R432006339	GS-040062-02424	7.5 (7500)	5.42 (2.46)	R432031847	1"- 11-1/2	2.75 (1.25)
	220V-50Hz/240V-60Hz	R432006340	GS-040062-02727					
	12 VDC	R432030353	GS-040062-03636					
	24 VDC	R432006341	GS-040062-03939					
	24 VAC	R432030178	GS-040062-06161					
	without coil	R432002469	GS-040062-00000					

Note: All valves listed above come from the factory internally piloted. To order an externally piloted valve, change the 7th character in the model number (not counting dashes), from 6 to 5. For example, model GT-010062-02424 would become GT-010052-02424. For externally piloted valves less coils, see page 16.
*Consult factory for voltages not listed.

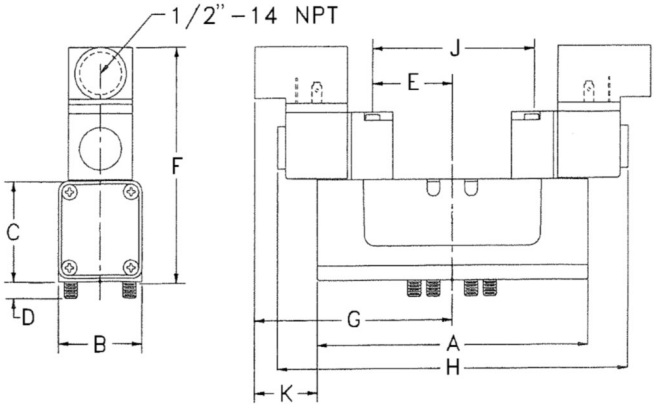

Dimensions

Note: solenoid connector shown for reference only.

Size	A		B		C		D		E	
	IN	mm	IN	mm	IN	mm	IN	mm	IN	mm
1	5.12	130.0	1.57	40.0	1.89	48.0	.31	8.0	1.52	38.5
2	5.82	147.8	2.03	51.6	2.30	58.4	.39	10.0	1.57	40.0
3	7.54	191.5	2.71	68.9	2.59	65.8	.41	10.4	1.62	41.3
4	8.62	218.9	3.09	78.5	2.89	73.4	.41	10.4	1.62	41.3

Size	F		G		H		J		K	
	IN	mm	IN	mm	IN	mm	IN	mm	IN	mm
1	4.53	115.1	3.48	88.5	6.97	177.0	3.03	77.0	1.20	30.5
2	4.90	124.5	3.54	90.0	7.09	180.0	3.15	80.0	.92	23.4
3	5.23	132.8	4.18	106.2	8.36	212.3	3.25	82.6	1.05	26.7
4	5.32	135.1	6.65	169.0	13.31	338.1	3.25	82.6	.68	17.3

Ceram™ Valves, ISO 5599-1 Sizes 1-4
Single air pilot, metal and air spring return

5 Port / 2 Position
Single Air Pilot/Metal Spring Return &
Single Air Pilot/Air Spring Return
(ISO Standard 5599/1)

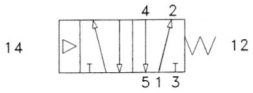



Choose valve first, then matching subbase or manifold components.

Single Air Pilot/Metal Spring Return

ISO Size	Valve Part Number	Valve Model Number	Flow Cv (Nl/min)	Valve Weight lbs. (kg)	Single Subbase (Side Ported)	Port Size	Subbase Weight lbs. (kg)
1	R432006393	GT-010050-03340	1.1 (1100)	1.22 (0.55)	R432031844 R432036353	1/4"-18 3/8"-18	0.76 (0.34)
2	R432006085	GS-020050-03340	2.4 (2400)	2.77 (1.26)	R432031845 R432036356	3/8"-18 1/2"-14	1.25 (0.57)
3	R432006204	GS-030050-03340	4.3 (4300)	3.37 (1.53)	R432015308 R432015309	1/2"-14 3/4"-14	1.85 (0.84)
4	R432006297	GS-040050-03340	7.5 (7500)	3.80 (1.72)	R432031847	1"- 11-1/2	2.75 (1.25)

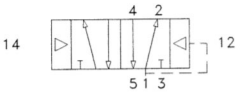

Single Air Pilot/Air Spring Return

ISO Size	Valve Part Number	Valve Model Number	Flow Cv (Nl/min)	Valve Weight lbs. (kg)	Single Subbase (Side Ported)	Port Size	Subbase Weight lbs. (kg)
1	R432006394	GT-010050-03351	1.1 (1100)	1.22 (0.55)	R432031844 R432036353	1/4"-18 3/8"-18	0.76 (0.34)
2	R432006086	GS-020050-03351	2.4 (2400)	2.77 (1.26)	R432031845 R432036356	3/8"-18 1/2"-14	1.25 (0.57)
3	R432006205	GS-030050-03351	4.3 (4300)	3.37 (1.53)	R432015308 R432015309	1/2"-14 3/4"-14	1.85 (0.84)
4	R432006298	GS-040050-03351	7.5 (7500)	3.80 (1.72)	R432031847	1"- 11-1/2	2.75 (1.25)

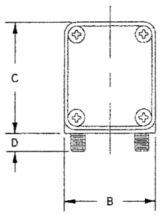

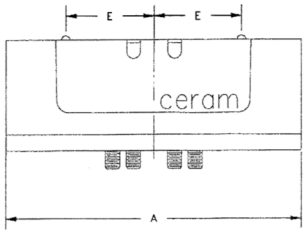

Dimensions

Size	A		B		C		D		E	
	IN	mm	IN	mm	IN	mm	IN	mm	IN	mm
1	5.12	130.0	1.57	40.0	1.89	48.0	.31	8.0	1.52	38.5
2	5.82	147.8	2.03	51.6	2.30	58.4	.39	10.0	1.57	40.0
3	7.54	191.5	2.71	68.9	2.59	65.8	.41	10.4	1.62	41.3
4	8.62	218.9	3.09	78.5	2.89	73.4	.41	10.4	1.62	41.3

Ceram™ Valves, ISO 5599-1 Sizes 1-4
Double air pilot, 5/2

5 Port / 2 Position
Double Air Pilot/
Subbase Mounted (ISO Standard 5599/1)

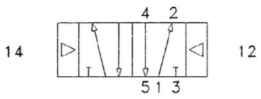



Choose valve first, then matching subbase or manifold components.

ISO Size	Valve Part Number	Valve Model Number	Flow Cv (Nl/min)	Valve Weight lbs. (kg)	Single Subbase (Side Ported)	Port Size	Subbase Weight lbs. (kg)
1	R432006392	GT-010050-03333	1.1 (1100)	1.22 (0.55)	R432031844 R432036353	1/4"-18 3/8"-18	0.76 (0.34)
2	R432006084	GS-020050-03333	2.4 (2400)	2.77 (1.26)	R432031845 R432036356	3/8"-18 1/2"-14	1.25 (0.57)
3	R432006203	GS-030050-03333	4.3 (4300)	3.37 (1.53)	R432015308 R432015309	1/2"-14 3/4"-14	1.85 (0.84)
4	R432006296	GS-040050-03333	7.5 (7500)	3.80 (1.72)	R432031847	1"- 11-1/2	2.75 (1.25)

Dimensions

Size	A		B		C		D		E	
	IN	mm	**IN**	mm	**IN**	mm	**IN**	mm	**IN**	mm
1	5.12	130.0	1.57	40.0	1.89	48.0	.31	8.0	1.52	38.5
2	5.82	147.8	2.03	51.6	2.30	58.4	.39	10.0	1.57	40.0
3	7.54	191.5	2.71	68.9	2.59	65.8	.41	10.4	1.62	41.3
4	8.62	218.9	3.09	78.5	2.89	73.4	.41	10.4	1.62	41.3

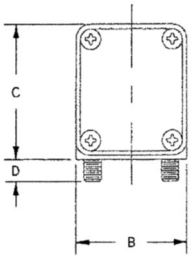

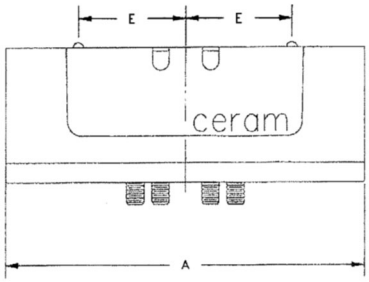

Ceram™ Valves, ISO 5599-1 Sizes 1-4

Double solenoid, 5/3, closed center

5 Port / 3 Position - Closed Center
Double Solenoid
Subbase Mounted (ISO Standard 5599/1)

Combination Manual Override: Locking & Non-Locking
Sizes 1-4

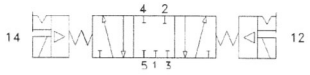

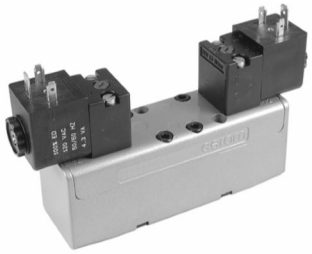

Choose valve first, solenoid connector next (see Solenoid Connectors page), then matching subbase or manifold components.

ISO Size	Voltage	Valve Part Number*	Valve Model Number	Flow Cv (Nl/min)	Valve Weight lbs. (kg)	Single Subbase (Side Ported)	Port Size	Subbase Weight lbs. (kg)
	110V-50Hz/120V-60Hz	R432006382	GT-010042-02626					
	220V-50Hz/240V-60Hz	R432006383	GT-010042-02929					
1	12 VDC	R432006384	GT-010042-03838			R432031844	1/4"-18	
	24 VDC	R432006385	GT-010042-04141	1.1 (1100)	3.21 (1.46)	R432036353	3/8"-18	0.76 (0.34)
	24 VAC	R432006388	GT-010042-06262					
	without coil	R432002473	GT-010042-00000					
	110V-50Hz/120V-60Hz	R432006076	GS-020042-02626					
	220V-50Hz/240V-60Hz	R432006077	GS-020042-02929					
2	12 VDC	R432006078	GS-020042-03838			R432031845	3/8"-18	
	24 VDC	R432006079	GS-020042-04141	2.4 (2400)	4.75 (2.15)	R432036356	1/2"-14	1.25 (0.57)
	24 VAC	R432006082	GS-020042-06262					
	without coil	R432002443	GS-020042-00000					
	110V-50Hz/120V-60Hz	R432006196	GS-030042-02626					
	220V-50Hz/240V-60Hz	R432006197	GS-030042-02929					
3	12 VDC	R432006198	GS-030042-03838			R432015308	1/2"-14	
	24 VDC	R432006199	GS-030042-04141	4.3 (4300)	4.99 (2.26)	R432015309	3/4"-14	1.85 (0.84)
	24 VAC	R432030346	GS-030042-06262					
	without coil	R432002453	GS-030042-00000					
	110V-50Hz/120V-60Hz	R432006290	GS-040042-02626					
	220V-50Hz/240V-60Hz	R432006291	GS-040042-02929					
4	12 VDC	R432006292	GS-040042-03838	7.5 (7500)	5.42 (2.46)	R432031847	1"- 11-1/2	2.75 (1.25)
	24 VDC	R432006293	GS-040042-04141					
	24 VAC	R432030338	GS-040042-06262					
	without coil	R432002463	GS-040042-00000					

Note: All valves listed above come from the factory internally piloted. To order an externally piloted valve, change the 7th character in the model number (not counting dashes), from 4 to 2. For example, model GT-010042-02626 would become GT-010022-02626. For externally piloted valves less coils, see page 16.
*Consult factory for voltages not listed.

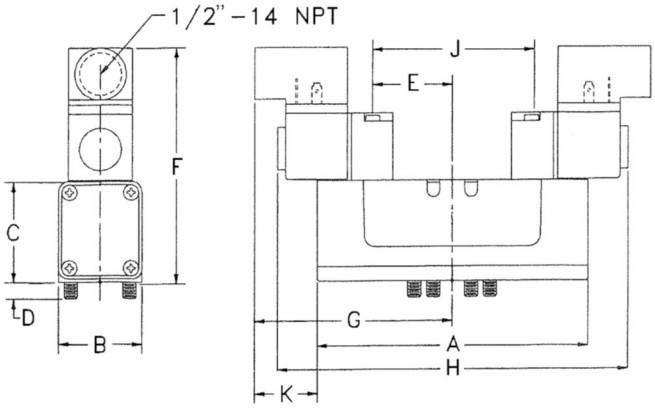

Dimensions

Note: solenoid connector shown for reference only.

Size	A		B		C		D		E	
	IN	mm	IN	mm	IN	mm	IN	mm	IN	mm
1	5.12	130.0	1.57	40.0	1.89	48.0	.31	8.0	1.52	38.5
2	5.82	147.8	2.03	51.6	2.30	58.4	.39	10.0	1.57	40.0
3	7.54	191.5	2.71	68.9	2.59	65.8	.41	10.4	1.62	41.3
4	8.62	218.9	3.09	78.5	2.89	73.4	.41	10.4	1.62	41.3

Size	F		G		H		J		K	
	IN	mm	IN	mm	IN	mm	IN	mm	IN	mm
1	4.53	115.1	3.48	88.5	6.97	177.0	3.03	77.0	1.20	30.5
2	4.90	124.5	3.54	90.0	7.09	180.0	3.15	80.0	.92	23.4
3	5.23	132.8	4.18	106.2	8.36	212.3	3.25	82.6	1.05	26.7
4	5.32	135.1	6.65	169.0	13.31	338.1	3.25	82.6	.68	17.3

Ceram™ Valves, ISO 5599-1 Sizes 1-4

Double solenoid, 5/3, exhaust open center

5 Port / 3 Position - Exhaust Open Center
Double Solenoid
Subbase Mounted (ISO Standard 5599/1)

Combination Manual Override: Locking & Non-Locking
Sizes 1-4

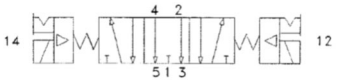

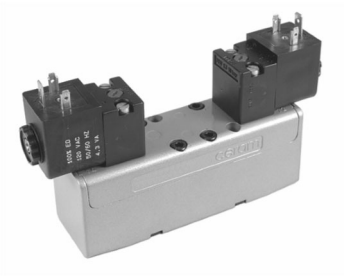

Choose valve first, solenoid connector next (see Solenoid Connectors page), then matching subbase or manifold components.

ISO Size	Voltage	Valve Part Number*	Valve Model Number	Flow Cv (Nl/min)	Valve Weight lbs. (kg)	Single Subbase (Side Ported)	Port Size	Subbase Weight lbs. (kg)
	110V-50Hz/120V-60Hz	R432006365	GT-010032-02626					
	220V-50Hz/240V-60Hz	R432006366	GT-010032-02929					
1	12 VDC	R432006367	GT-010032-03838			R432031844	1/4"-18	
	24 VDC	R432006368	GT-010032-04141	1.1 (1100)	3.21 (1.46)	R432036353	3/8"-18	0.76 (0.34)
	24 VAC	R432006371	GT-010032-06262					
	without coil	R432002472	GT-010032-00000					
	110V-50Hz/120V-60Hz	R432006058	GS-020032-02626					
	220V-50Hz/240V-60Hz	R432006059	GS-020032-02929					
2	12 VDC	R432030023	GS-020032-03838			R432031845	3/8"-18	
	24 VDC	R432006060	GS-020032-04141	2.4 (2400)	4.75 (2.15)	R432036356	1/2"-14	1.25 (0.57)
	24 VAC	R432006063	GS-020032-06262					
	without coil	R432002442	GS-020032-00000					
	110V-50Hz/120V-60Hz	R432006184	GS-030032-02626					
	220V-50Hz/240V-60Hz	R432006185	GS-030032-02929					
3	12 VDC	R432006186	GS-030032-03838			R432015308	1/2"-14	
	24 VDC	R432006187	GS-030032-04141	4.3 (4300)	4.99 (2.26)	R432015309	3/4"-14	1.85 (0.84)
	24 VAC	R432030359	GS-030032-06262					
	without coil	R432002452	GS-030032-00000					
	110V-50Hz/120V-60Hz	R432006283	GS-040032-02626					
	220V-50Hz/240V-60Hz	R432030340	GS-040032-02929					
4	12 VDC	R432029042	GS-040032-03838	7.5 (7500)	5.42 (2.46)	R432031847	1"- 11-1/2	2.75 (1.25)
	24 VDC	R432006284	GS-040032-04141					
	24 VAC	R432030339	GS-040032-06262					
	without coil	R432002462	GS-040032-00000					

Note: All valves listed above come from the factory internally piloted. To order an externally piloted valve, change the 7th character in the model number (not counting dashes), from 3 to 1. For example, model GT-010032-02626 would become GT-010012-02626. For externally piloted valves less coils, see page 16.
*Consult factory for voltages not listed.

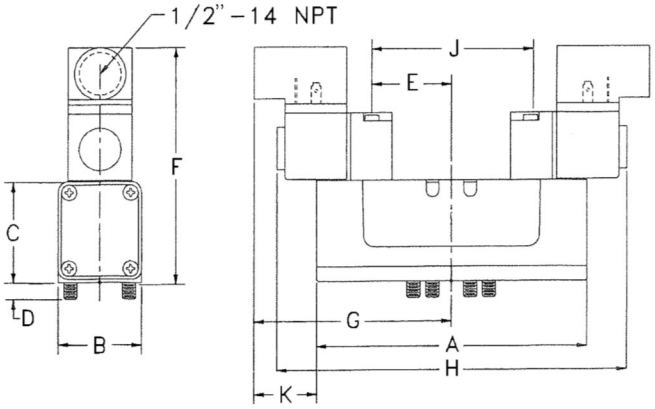

Dimensions

Note: solenoid connector shown for reference only.

Size	A		B		C		D		E	
	IN	mm	IN	mm	IN	mm	IN	mm	IN	mm
1	5.12	130.0	1.57	40.0	1.89	48.0	.31	8.0	1.52	38.5
2	5.82	147.8	2.03	51.6	2.30	58.4	.39	10.0	1.57	40.0
3	7.54	191.5	2.71	68.9	2.59	65.8	.41	10.4	1.62	41.3
4	8.62	218.9	3.09	78.5	2.89	73.4	.41	10.4	1.62	41.3

Size	F		G		H		J		K	
	IN	mm	IN	mm	IN	mm	IN	mm	IN	mm
1	4.53	115.1	3.48	88.5	6.97	177.0	3.03	77.0	1.20	30.5
2	4.90	124.5	3.54	90.0	7.09	180.0	3.15	80.0	.92	23.4
3	5.23	132.8	4.18	106.2	8.36	212.3	3.25	82.6	1.05	26.7
4	5.32	135.1	6.65	169.0	13.31	338.1	3.25	82.6	.68	17.3

Ceram™ Valves, ISO 5599-1 Sizes 1-4

Double air pilot , 5/3, closed center and exhaust open center

5 Port / 3 Position
Double Air Pilot - Closed Center
Double Air Pilot - Exhaust Open Center
Subbase Mounted (ISO Standard 5599/1)

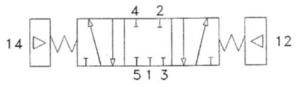



Choose valve first, then matching subbase or manifold components.

Double Air Pilot - Closed Center

ISO Size	Valve Part Number	Valve Model Number	Flow Cv (Nl/min)	Valve Weight lbs. (kg)	Single Subbase (Side Ported)	Port Size	Subbase Weight lbs. (kg)
1	R432006352	GT-010020-03535	1.1 (1100)	1.22 (0.55)	R432031844 R432036353	1/4"-18 3/8"-18	0.76 (0.34)
2	R432006047	GS-020020-03535	2.4 (2400)	2.77 (1.26)	R432031845 R432036356	3/8"-18 1/2"-14	1.25 (0.57)
3	R432006173	GS-030020-03535	4.3 (4300)	3.37 (1.53)	R432015308 R432015309	1/2"-14 3/4"-14	1.85 (0.84)
4	R432006276	GS-040020-03535	7.5 (7500)	3.80 (1.72)	R432031847	1"- 11-1/2	2.75 (1.25)

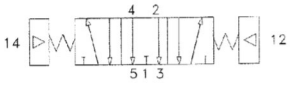

Double Air Pilot - Exhaust Open Center

ISO Size	Valve Part Number	Valve Model Number	Flow Cv (Nl/min)	Valve Weight lbs. (kg)	Single Subbase (Side Ported)	Port Size	Subbase Weight lbs. (kg)
1	R432006345	GT-010010-03535	1.1 (1100)	1.22 (0.55)	R432031844 R432036353	1/4"-18 3/8"-18	0.76 (0.34)
2	R432006040	GS-020010-03535	2.4 (2400)	2.77 (1.26)	R432031845 R432036356	3/8"-18 1/2"-14	1.25 (0.57)
3	R432006167	GS-030010-03535	4.3 (4300)	3.37 (1.53)	R432015308 R432015309	1/2"-14 3/4"-14	1.85 (0.84)
4	R432006272	GS-040010-03535	7.5 (7500)	3.80 (1.72)	R432031847	1"- 11-1/2	2.75 (1.25)

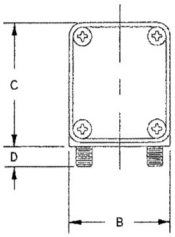

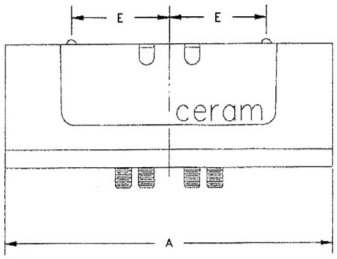

Dimensions

Size	A		B		C		D		E	
	IN	mm	IN	mm	IN	mm	IN	mm	IN	mm
1	5.12	130.0	1.57	40.0	1.89	48.0	.31	8.0	1.52	38.5
2	5.82	147.8	2.03	51.6	2.30	58.4	.39	10.0	1.57	40.0
3	7.54	191.5	2.71	68.9	2.59	65.8	.41	10.4	1.62	41.3
4	8.62	218.9	3.09	78.5	2.89	73.4	.41	10.4	1.62	41.3

Ceram™ Valves, ISO 5599-1 Sizes 1-4

cURus approved operators/Externally piloted valves less coil

Solenoid Operated Valves with cURus Operators (dual UL Recognized / CSA Approved)

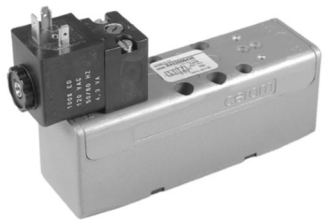

Available in 120VAC (suffix code 57 for 2 or 3 position valves) or 24VDC (suffix code 58 for 2 or 3-position valves).

Ordering example:
Model code GT-010061-02440 is the model code for a standard valve with 120VAC operator. To get the model code for the same valve with a U.L. approved 120VAC operator, substitute 57 for the 24.
Reference Model Code Identification page for complete listing.

Valve is not supplied with DIN solenoid connector, must order separately, see Solenoid Connectors page.

For online model code to part number crossover: www.aventics.com/us/downloads

NOTE: Dimensions are identical to standard solenoid valve.

Externally Piloted Ceram Valve - without Coils



Part Number	Description
R432002470	SIZE 1 EP OC DS LESS COILS (GT-010012-00000)
R432002471	SIZE 1 EP CC DS LESS COILS (GT-010022-00000)
R432002474	SIZE 1 EP SS LESS COIL (GT-010051-00040)
R432002475	SIZE 1 EP SS LESS COIL (GT-010051-00051)
R432002476	SIZE 1 EP DS LESS COILS (GT-010052-00000)
R432002440	SIZE 2 EP OC DS LESS COILS (GS-020012-00000)
R432002441	SIZE 2 EP CC DS LESS COILS (GS-020022-00000)
R432002444	SIZE 2 EP SS LESS COIL (GS-020051-00040)
R432002445	SIZE 2 EP SS LESS COIL (GS-020051-00051)
R432002446	SIZE 2 EP DS LESS COILS (GS-020052-00000)
R432002450	SIZE 3 EP OC DS LESS COILS (GS-030012-00000)
R432002451	SIZE 3 EP CC DS LESS COILS (GS-030022-00000)
R432002454	SIZE 3 EP SS LESS COIL (GS-030051-00040)
R432002455	SIZE 3 EP SS LESS COIL (GS-030051-00051)
R432002456	SIZE 3 EP DS LESS COILS (GS-030052-00000)
R432002460	SIZE 4 EP OC DS LESS COILS (GS-040012-00000)
R432002461	SIZE 4 EP CC DS LESS COILS (GS-040022-00000)
R432002464	SIZE 4 EP SS LESS COIL (GS-040051-00040)
R432002465	SIZE 4 EP SS LESS COIL (GS-040051-00051)
R432002466	SIZE 4 EP DS LESS COILS (GS-040052-00000)

Ceram™ Valves, ISO 5599-1 Sizes 1-4
CSA approved 3- and 5-pin connections

Solenoid Operated Valves Meeting ANSI B93.55
Electrical Connections (Brad Harrison® style): CSA approved 3- and 5-pin Mini

Electrical Hook-up and Ordering Information*



Ordering example:
To order a 120VAC single solenoid/metal spring return valve with ANSI B93.55 pin connection:
Substitute 03 for the 24 in the model code (GT-010061-02440 would become GT-010061-00340). Reference Model Code Identification page for complete listing.

For online model code to part number crossover:
www.aventics.com/us/downloads

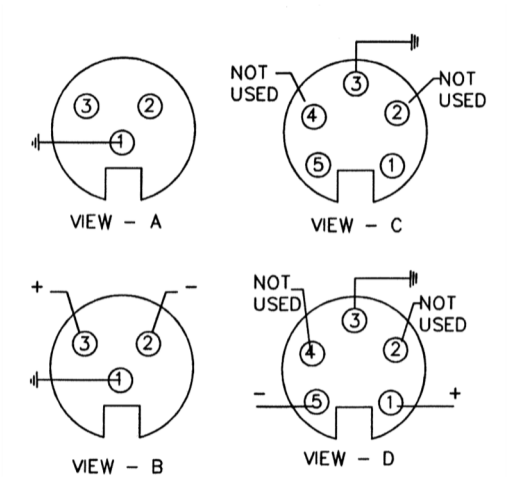

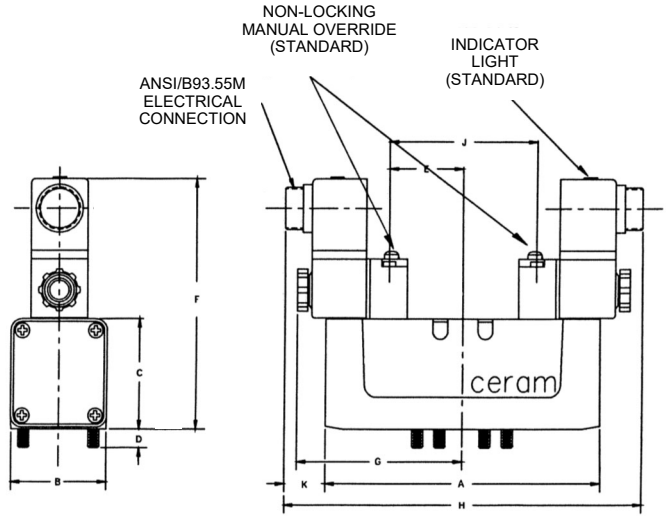

2 or 3 position valves*

VOLTAGE	CONNECTOR INSERT	PART NUMBER SUFFIX
120 VAC 50/60 Hz	VIEW A	03
24 VDC	VIEW B	06
120 VAC 50/60 Hz	VIEW C	05
24 VDC	VIEW D	10

*Electrical connector/cable must be ordered separately from the valve. One connector/cable assembly is required for each solenoid. See Solenoid Connectors page for selection.

Dimensions

****Operator does not overhang body assembly.**

Size	A		B		C		D		E	
	IN	mm	IN	mm	IN	mm	IN	mm	IN	mm
1	5.12	130.0	1.57	40.0	1.89	48.0	.31	8.0	1.52	38.5
2	5.82	147.8	2.03	51.6	2.30	58.4	.39	10.0	1.57	40.0
3	7.54	191.5	2.71	68.9	2.59	65.8	.41	10.4	1.62	41.3
4	8.62	218.9	3.09	78.5	2.89	73.4	.41	10.4	1.62	41.3

Size	F		G		H		J		K	
	IN	mm	IN	mm	IN	mm	IN	mm	IN	mm
1	4.53	115.1	3.48	88.5	6.97	177.0	3.03	77.0	1.20	30.5
2	4.90	124.5	3.54	90.0	7.09	180.0	3.15	80.0	.92	23.4
3	5.23	132.8	4.18	106.2	8.36	212.3	3.25	82.6	1.05	26.7
4	5.32	135.1	6.65	169.0	13.31	338.1	3.25	82.6	.68	17.3

Ceram™ Valves, ISO 5599-1 Sizes 1-4
4 pin M12 connections, 24 VDC

Solenoid Operated Valves with 4 pin M12 Electrical Connections for 24 VDC

Electrical Hook-up and Ordering Information*



Ordering example:
To order a 24 VDC single solenoid/metal spring return valve with 4 pin M12 connection: Substitute 02 for the 24 in the model code (GT-010061-02440 would become GT-010061-00240). Reference Model Code Identification page for complete listing.

For online model code to part number crossover: www.aventics.com/us/downloads

VOLTAGE	CONNECTOR INSERT	PART NUMBER SUFFIX
24 VDC	(above)	02

Description	NEW Part No.	NEW Model Code
CERAM SZ1 IP OC DS 24VDC 4-PIN MICRO	R432038372	GT-010032-00202
CERAM SZ1 EP SS 24VDC 4-PIN MICRO	R432038373	GT-010051-00240
CERAM SZ1 IP SS 24VDC 4-PIN MICRO	R432038374	GT-010061-00240
CERAM SZ1 IP DS 24VDC 4-PIN MICRO	R432038376	GT-010062-00202
CERAM SZ2 EP SS 24VDC 4-PIN MICRO	R432038365	GS-020051-00240
CERAM SZ2 IP SS 24VDC 4-PIN MICRO	R432038366	GS-020061-00240
CERAM SZ2 IP DS 24VDC 4-PIN MICRO	R432038367	GS-020062-00202
CERAM SZ3 EP SS 24VDC 4-PIN MICRO	R432038368	GS-030051-00240
CERAM SZ3 IP SS 24VDC 4-PIN MICRO	R432038369	GS-030061-00240
CERAM SZ3 IP DS 24VDC-4 PIN	R432038370	GS-030062-00202
CERAM SZ4 IP SS 24VDC 4-PIN MICRO	R432038371	GS-040061-00240
COIL 4 PIN M12 24VDC	R432038356	
SOLENOID OPERATOR 4 PIN 24VDC	R432038357	

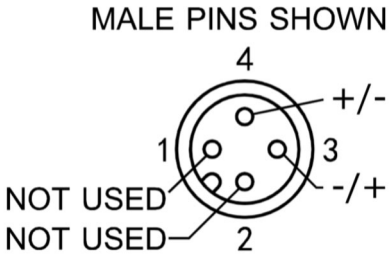

PIN	Obsolete CSA Approved 4-pin M12 micro connector … operator model code “04”	NEW 4-pin M12 micro connector … operator model code “02” (NO certification/approval)
1	+	not used
2	not used	not used
3	-	+ / –
4	not used	– / +

Ceram™ Valves, ISO 5599-1 Sizes 1-4

CSA approved operator, single 4 or 5 pin connection
For double solenoid valves

Solenoid Operated Valves with CSA Approved Operator Meeting ANSI B93.55 Electrical Connections (Brad Harrison® style)

Single 4 or 5 Pin Connection for Double Solenoid Valves, 2 or 3 Position



**120VAC (Model code 07) version is temporarily unavailable. Contact AVENTICS Customer Service for alternatives.*

Ordering example:

To order a 120VAC double solenoid, 2 position size 1 valve with single ANSI B93.55 5-pin connection:
Substitute 07 for the 24 in the model code (GT-010061-02424 would become GT-010061-00707). Reference Model Code Identification page for complete listing.
For online model code to part number crossover: www.aventics.com/us/downloads

Voltage	Model Code Suffix	Number of Pins
120 VAC 50/60 Hz*	07*	5 (mini)
24 VDC	08	5 (mini)
24 VDC	09	4 (micro)

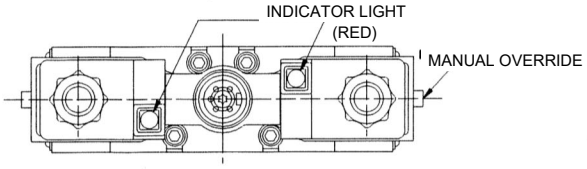

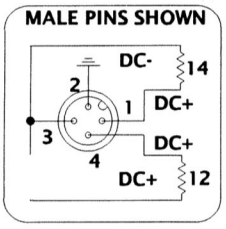

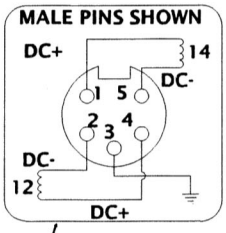

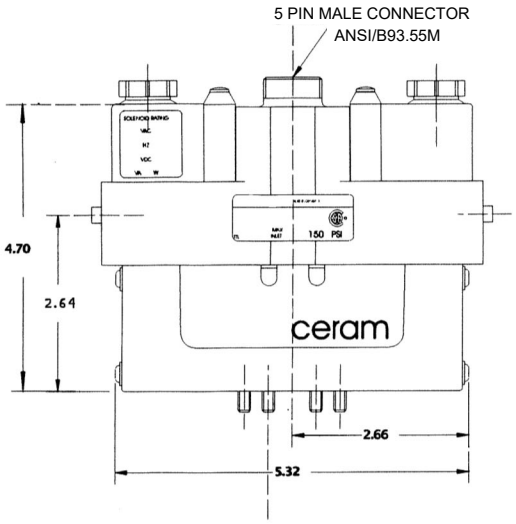

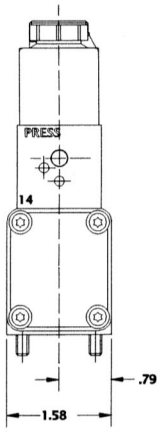

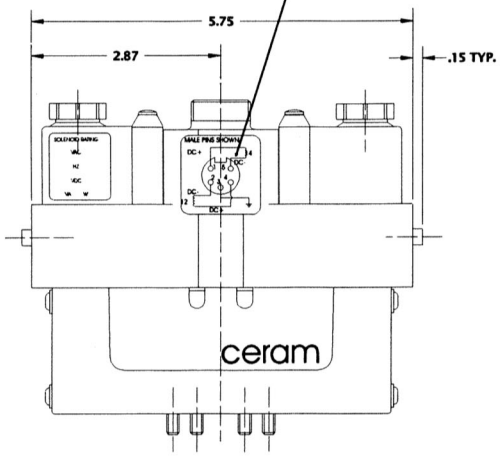

Dimensions shown above are for Size 1 valve; for other sizes, ***add*** dimensions below to Size 1 valve body dimensions above. Electrical portion of valve does not change, regardless of valve size.
Dimension Adders (inches)

Size	Height	Width	Length
2	0.41	0.45	0.50
3	0.70	1.13	2.22
4	1.00	1.51	3.30

Ceram™ Valves, ISO 5599-1 Sizes 1-4

Explosion proof and intrinsically safe solenoid valves

Explosion Proof Solenoid Valves for Hazardous Locations

NEMA 7C & 7D & U.L.
Class I-Groups C & D-Explosion Proof
NEMA 8C & 8D & U.L.
Class I-Groups C & D-Explosion Proof
NEMA 9E, 9F & 9G & U.L.
Class II-Groups E, F, G-Explosion Proof

Explosion Proof valves do not require solenoid connectors, as they come standard with 1/2" conduit housing and 18 inch wire leads.



Reference Model Code Identification page for model code information.
For online model code to part number crossover: www.aventics.com/us/ceram

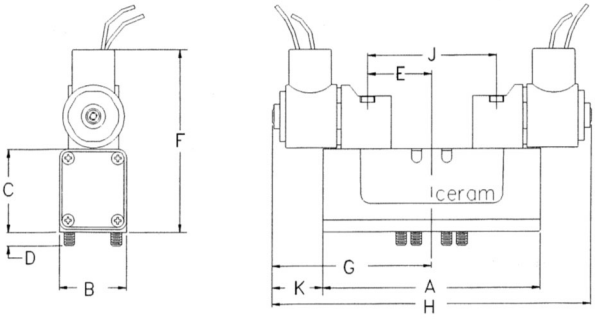

Dimensions

****Operator does not overhang body assembly.**

Size	A		B		C		D		E	
	IN	mm	IN	mm	IN	mm	IN	mm	IN	mm
1	5.12	130.0	1.57	40.0	1.89	48.0	.31	8.0	1.52	38.5
2	5.82	147.8	2.03	51.6	2.30	58.4	.39	10.0	1.57	40.0
3	7.54	191.5	2.71	68.9	2.59	65.8	.41	10.4	1.62	41.3
4	8.62	218.9	3.09	78.5	2.89	73.4	.41	10.4	1.62	41.3

Size	F		G		H		J		K	
	IN	mm	IN	mm	IN	mm	IN	mm	IN	mm
1	4.17	105.9	3.75	95.3	7.50	190.5	3.03	77.0	1.19	30.2
2	4.58	116.3	3.80	96.5	7.61	193.3	3.15	80.0	.90	22.9
3	4.87	123.7	3.86	98.0	7.71	195.8	3.25	82.6	.09	2.29
4	5.71	145.0	4.31	109.5	**	**	3.25	82.6	**	**

Intrinsically Safe Solenoid Valves for Hazardous Locations (CSA approved)

Classes I, II and III, DIV I
Groups A, B, C, D, E, F and G

For use in low voltage (24VDC) Intrinsically Safe applications.
NO OTHER VOLTAGE IS APPROVED.

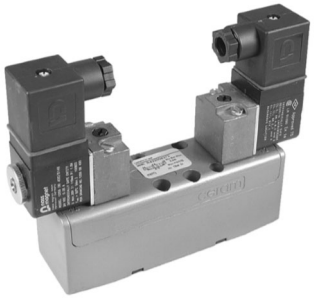

Comes standard with non-lighted DIN solenoid connector.

Must be connected to an FM approved Zener Diode Barrier.*

For dimensions, reference standard solenoid models.
Maximum internally piloted valve pressure is 115 psi. Pressures to 150 psi can be used when external pilot is utilized and pilot pressure is limited to 115 psi.
*FM Approved Barrier Manufacturer
Stahl Incorporated—Woburn, MA
Request AVENTICS Application Memo Issue#35 and ADV-300.ISSV for Intrinsically Safe Valve information and Stahl Barrier part numbers.

Installation Information:

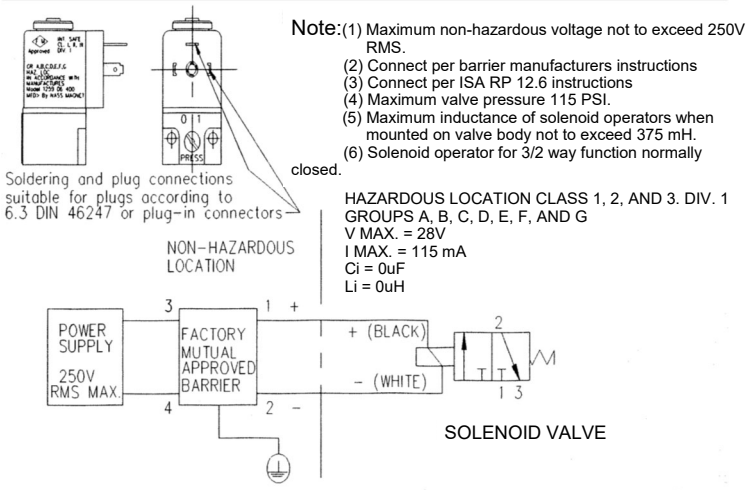

Note: (1) Maximum non-hazardous voltage not to exceed 250V RMS.
(2) Connect per barrier manufacturers instructions
(3) Connect per ISA RP 12.6 instructions
(4) Maximum valve pressure 115 PSI.
(5) Maximum inductance of solenoid operators when mounted on valve body not to exceed 375 mH.
(6) Solenoid operator for 3/2 way function normally closed.

Ordering example:
Model GT-010061-03940 = standard valve, same valve with intrinsically safe operator would be GT-010061-09040.
Reference Model Code Identification page for complete listing.
For online model code to part number crossover: www.aventics.com/us/downloads

Ceram™ Valves, ISO 5599-1 Sizes 1-4
Repair kits and parts

Rubber Seal Kits

Size	Description	Part No.	Old Part No.
Size 1	Seal Kit, GT Series 2 Pos.	R432009099	P - 029294-00000
Size 1	Seal Kit, GT Series 3 Pos.	R432009100	P - 029295-00000
*Size 2	Seal Kit, GS Series	R432008631	P - 026486-00002
*Size 3	Seal Kit, GA/GS Series	R432015773	P - 069691-00001
*Size 4	Seal Kit, GA/GS Series	R432015774	P - 069692-00001

* Includes all user serviceable rubber parts normally required.

Recommended Valve Mounting Bolt Torque Values

Size	Max. ft.-lbs.
1	4
2	6
3 & 4	7

ATTENTION: DO NOT remove the static base. Special fixtures are required to reinstall plates to factory specifications. Roller bearings and ceramic plate stack are calibrated to obtain proper mechanical pre-loading. Therefore, field disassembly is not recommended for the plate/bearing assembly. The ceramic slide plates do not require maintenance under normal operating conditions and should not be removed from the valve - consult factory if plate maintenance is required. There are no seals for the static base/ceramic plate assembly contained in repair kits.

Gasket between valve and subbase

Size	Part Number
Size 1	R432006602
Size 2	R432008765
Size 3	R432013791
Size 4	R432037891

Solenoid Kits & Coils - Sizes 1- 4 (Oct. 1992 & later for Sizes 3 & 4)

Solenoid Kits*

Description	Part Number	Old Part No.
120VAC 50/60Hz	R432015466	P - 068899-00000
240VAC 50/60Hz	R432015467	P - 068899-00001
12 VDC	R432015468	P - 068899-00003
24 VDC	R432015469	P - 068899-00004
24VAC 50/60Hz	R432015470	P - 068899-00005

* Includes coil and solenoid operator, but not connector. Note: for a “closed” knurled nut for a coil (no exposed pilot exhaust port), order part number R434004156.

Operator Only

Description	Part Number	Old Part No.
For all voltages	R432008909	P - 028197-00000

Coil Only

Description	Part Number	Old Part No.
110VAC/50Hz or 120VAC/60Hz	R432011985	P - 048835-00001
220VAC/50Hz or 240VAC/60Hz	R432011986	P - 048835-00002
12 VDC	R432011988	P - 048835-00004
24 VDC	R432011989	P - 048835-00005
24VAC 50/60Hz	R432011990	P - 048835-00006

Miscellaneous Repair parts & Kits

Sizes 1 & 2

Description	Part Number	Old Part No.
Size 1 & 2 Quick Release Valve Kit (inc. 2 QRV assemblies)	R432008632	P - 026487-00001
Size 1 & 2 Solenoid Plunger Kit (includes armature assembly)	R432015687	P - 069541-00000
Solenoid Nut Kit Size 1-4§	R432008975	P - 028462-00000
Size 1 Return Spring	R432008995	P - 028645-00000
Size 2 Return Spring	R434000717	
Size 1 Sol./Air Pit. Piston Kit (includes piston, sleeve, seals & grease)	R432008560	P - 026408-00000
Size 2 Sol./Air Pit. Piston Kit (includes piston, sleeve, seals, grease)	R432008561	P - 026409-00000
Size 1 Mounting Bolt/Body Screw Kit-GT	R432002387	
Size 1 Mounting Bolt/Body Screw Kit-GS	R432008784	P - 027276-00000
Size 2 Mounting Bolt & Body Screw Kit	R432008785	P - 027277-00000
Size 1 & 2 Seal 10-120 psi Adj. Knob Assy. Sandwich Reg. (fits R432… regulators only)	R432010973	P - 031282-00000
Size 1 & 2 Seal Rep. Kit for Sand. Reg. (fits all old style single & double)	R432009198	P - 029922-00000
Size 1 & 2 Seal Rep. Kit for Sand. Reg. (fits all new style single & double)	R432009199	P - 029923-00000
Size 1 Valve Gasket	R432006602	
Size 2 Valve Gasket	R432008765	
Size 1 Sandwich Regulator Gasket	R432011773	
Size 2 Sandwich Regulator Gasket	R432011774	

Sizes 3 & 4

Description	Part Number	Old Part No.
Size 3 & 4 Quick Release Vlv. Kit (QRV assemblies for any valve)	R432008681	P - 026684-00002
Size 3 & 4 Sol. Plunger Kit (includes armature assembly)§	R432015687	P - 069541-00000
Size 3 Return Kit	R432008887	P - 028037-00000
Size 4 Return Kit	R432008888	P - 028038-00000
Size 3 Sol. Air Pilot Piston Kit. (inc. piston, seals, end cvr. gskt., grease)	R432008658	P - 026635-00000
Size 4 Sol. Air Pilot Piston Kit. (inc. piston, seals, end cvr. gskt., grease)	R432008889	P - 028039-00000
Size 3 Seal Rep. Kit for Sand. Reg. (fits all new style sgl. & dbl.)	R432009205	P - 029951-00000
Size 3 Mntg. Bolt/Body Screw Kit	R432008799	P - 027412-00000
Size 4 Mntg. Bolt/Body Screw Kit	R432008800	P - 027413-00000
Size 3 Valve Gasket	R432013791	
Size 4 Valve Gasket	R432037891	
Size 3 Sandwich Regulator Gasket	R432011775	
Explosion Proof Solenoid Kits & Coils Sizes 1 thru 4		
Solenoid Kit - 120 VAC 50/60Hz	R432008525	P - 026293-00000
Solenoid Kit - 240VAC 50/60Hz	R432008527	P - 026293-00002
Solenoid Kit - 24 VDC	R432008626	P - 026293-00001
Coil only - 120VAC 50/60Hz	R432013760	P - 067370-00000
Coil only - 240VAC 50/60Hz	R432013761	P - 067371-00000
Coil only - 24 VDC	R432013763	P - 067374-00000

Ceram™ Valves, ISO 5599-1 Sizes 1-4

Subbases and manifolds, Size 1

ISO SIZE 1 SUBBASES

Single Subbase (side ported)
1/4" or 3/8" NPT or G (BSPP) ports

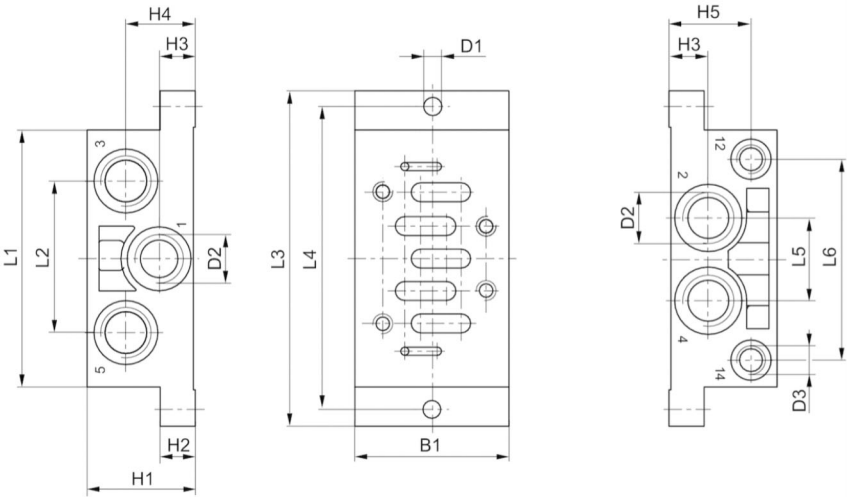

Silencers:
R432012060 Silencer, 1/4" NPT
R432012058 Silencer, 3/8" NPT
R412010245 Silencer, G 1/4
R412010246 Silencer, G 3/8

Part No.	B1	H1	H2	H3	H4	H5	D1	D2 *)	D3 *)	L1	L2	L3	L4	L5	L6
R432031844	48	32	10	11.5	21.5	23.5	5.5	1/4" NPTF	1/8" NPTF	84	43	110	98	24	58
1825503143	48	32	10	11.5	21.5	23.5	5.5	G 1/4	G 1/8	84	43	110	98	24	58
R432036353	48	38.5	10	13.5	25	28.7	5.5	3/8" NPTF	1/8" NPTF	84	47	110	98	26.2	58.6
R432036352	48	38.5	10	13.5	25	28.7	5.5	G 3/8	G 1/8	84	47	110	98	26.2	58.6

* Ports. Note: all dimensions in mm.

ISO SIZE 1 MANIFOLDS

End and Bottom Ported Manifolds
1/4" & 3/8" NPT or G (BSPP) delivery ports

Manifold Station Segment Part No.*
R432037640 - 1/4" NPTF (side), 3/8" NPTF (bottom)
R432037639 - 1/4 BSPP (side), 3/8 BSPP (bottom)

Left & Right End Plate Kit Part No.*
R432039422 - 3/8" NPTF
R432041042 - 3/8 BSPP

Port Plug, 3/8" NPTF:
Part No. R431009434

Pressure Separation Disc Part No.**
R432038306

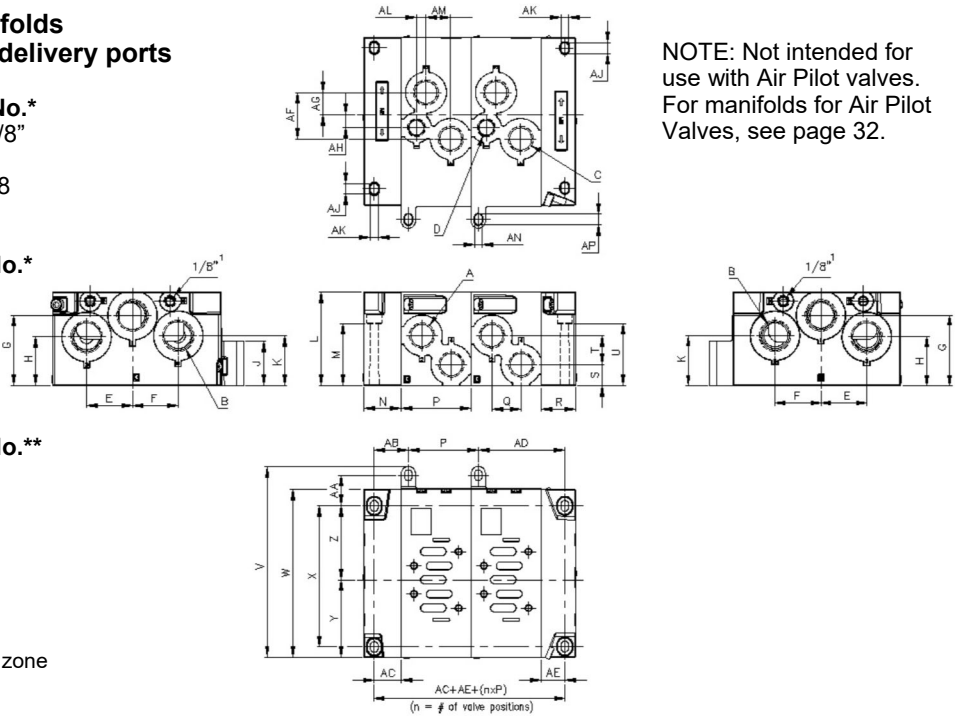

NOTE: Not intended for use with Air Pilot valves. For manifolds for Air Pilot Valves, see page 32.

*Includes gaskets and all hardware
** Includes 1 disc for multiple pressure zone

Size	A [1]	B [1]	C [1]	D [1]	E	F	G	H	J	K	L	M	N	P	Q	R	S	T	U
1	1/4	3/8	3/8	none	23	18	15.5	30	20	37.5	60.6	10.5	25	45	18	25	13.3	14.7	15
Size	**V**	**W**	**X**	**Y**	**Z**	**AA**	**AB**	**AC**	**AD**	**AE**	**AF**	**AG**	**AH**	**AJ**	**AK**	**AL**	**AM**	**AN**	**AP**
1	150.5	135	102.5	66	50.3	27.3	24	18.5	57.5	18	23.8	11.8	none	8.3	5.8	none	12	5.5	8.5

[1]Available IN G (BSPP) or NPTF threads
All dimensions in mm.

Ceram™ Valves, ISO 5599-1 Sizes 1-4
Manifold accessories, Size 1

SIZE 1 ACCESSORIES

Sandwich Flow Controls (Meter Out Ports 5 & 3)

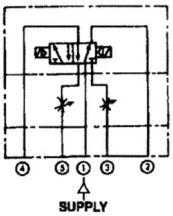

Our flow controls sandwich between the valve and subbase eliminating the need for addition piping and external controls for both working ports. Adjustment is with a knob on each side thread, along with our two stage needle design ensures excellent control. Kit includes flow control (1), gasket (1), and screws (4).

Part No. 0821201023

Dimensions
Height: .98" (25mm)
Maximum Overall Length: 3.15" (80mm)

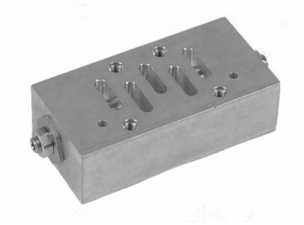

Dual Sandwich Regulator (Ports 2 & 4)

Both delivery port pressures are adjustable individually. Ideal for applications within a manifold where independent regulation of two supply pressures is required; no external pilot supply is required if minimum pilot pressure is available. Lip seal opens when downstream pressure is >30 psi than upstream pressure to allow reverse flow. With locking adjustment knobs at "Control 12" for port 2 and "Control 14" end for port 4. Kit includes regulator (1), gasket (1), screws (4) and gauges (2).

Part No. 0821302051 (10-120 psi)

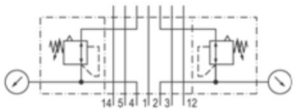

Dimensions:

Height: 1.77" (45mm)

Max. Overall Length: 11.50" (292mm)

Optional design (w/o gauge):

(1/8" NPT gauge ports)
R432015497 (5-60 psi)
R432015498 (3-30 psi)



Single Sandwich Regulator

Ideal for applications within a manifold where a particular pressure is required for one or more valves. Our regulator controls inlet pressure through to each cylinder port or delivery port pressures independently. A relieving type, the knob will also lock into a given position. Kit includes regulator (1), gasket (1), screws (4) and gauge (1).

Port Regulation	Part Number	(10
1	0821302048	
2	0821302054	
4	0821302057	

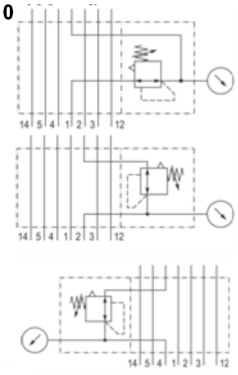



Dimensions:

Height: 1.77" (45mm)

Max. Overall Length: 7.80" (198mm)

Optional design (w/o gauge, 1/8" NPT gauge port):

R432009189 (Port 1, 5-60 psi)

R432009190 (Port 1, 3-30 psi)

Maintenance Plate

Mounts between valve and sub-base. Used when servicing individual valves in a manifold system, or replacing a cylinder while the rest of the system is still operating. Two positions, can be locked with a cotter pin:
0. Maintenance position, flow is minimal and valve is isolated§;
1. Open position, normal operation - full flow in the system.
§ The low flow in the maintenance position allows slow pressurizing when the valve is returned to service. This low flow also requires the removal of trapped downstream pressure before removing or servicing these same components.
CAUTION: Before service or removal of any components, all trapped pressure must be released. Vertically mounted cylinders, gravity and mechanically loaded actuators must be blocked/disable to avoid injury or system damage. Install blanking station segment kit if this minimal flow is undesirable when the valve is not present.
Material: Aluminum, black anodized.
Pressure range: Vacuum to 150 psi. *dim= IN (mm)*

ISO	Part Number	A1	A2	B	C
1	580 159 000 0	2.76 (70)	3.35 (85)	1.57 (40)	0.98 (25)

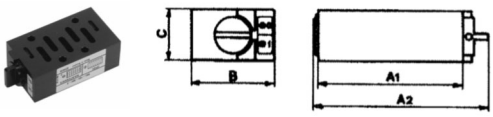

Ceram™ Valves, ISO 5599-1 Sizes 1-4
Manifold accessories, Size 1

ACCESSORIES (continued)

SIZE 1 Sandwich Auxiliary Pressure Block (Port 1)

The separate pressure block allows for more than two pressures to be provided to a manifold of valves. This unit sandwiches between the valve and base. Pressure to the balance of the manifold is isolated. Kit includes plate (1), gasket (1), screws (4), 3/8” NPTF port plug (1).

Part No. R432015767
(Allows 3 or more pressures to be applied to the same manifold assembly. See manifold assembly page.)
Auxiliary pressure supply blocked from manifold base port 1 channel

Dimensions

Height 1.18” (30mm)

Maximum Overall Length: 3.9” (99.3mm)

3/8” NPTF INLET



SIZE 1 Blanking Plate Kit

Allow for valve to be added later.
Can be removed to add valve to existing manifold.
Kit includes plate (1), gasket (1), screws (4).
Shown on 1/4” base.

Part No. 5801870000



ISO 5599-1 TRANSITION PLATE KIT

ISO Size 1 to ISO Size 2
Dimensions: 5.6” x 1.4” x 3.2”
Part No - R432037658

ISO Size 1 to ISO Size 3
Dimensions: 6.4” x 2.0” x 3.9”
Part No - R432037659

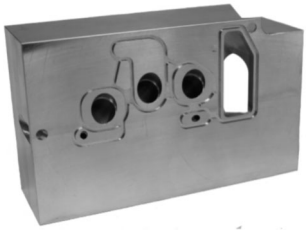

Ceram™ Valves, ISO 5599-1 Sizes 1-4
Subbases and manifolds, Size 2

ISO SIZE 2 SUBBASES

Single Subbase (side ported)
3/8" or 1/2" NPT or G (BSPP) ports

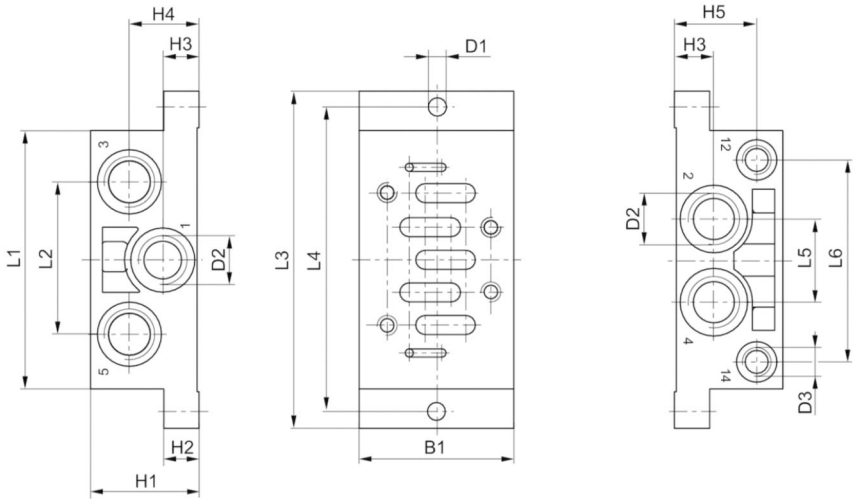

Silencers:
R432012058 Silencer, 3/8" NPT
R432011952 Silencer, 1/2" NPT
R412010246 Silencer, G 3/8
R412010247 Silencer, G 1/2

Part No.	B1	H1	H2	H3	H4	H5	D1	D2 *)	D3 *)	L1	L2	L3	L4	L5	L6
R432031845	57	40	13	14	26	30	6.6	3/8" NPTF	1/8" NPTF	95	56	124	112	30	74
1825503146	57	40	13	14	26	30	6.6	G 3/8	G 1/8	95	56	124	112	30	74
R432036356	57	42	13	15	24	32	6.6	1/2" NPTF	1/8" NPTF	122	60	124	112	31	71.2
R432036355	57	42	13	15	24	32	6.6	G 1/2	G 1/8	122	60	124	112	31	71.2

* Ports. Note: all dimensions in mm.

ISO SIZE 2 MANIFOLDS

End and Bottom Ported Manifolds
1/2" NPT or G (BSPP) delivery ports

Manifold Station Segment Part No.*
R432037642 - 1/2" NPTF (side), 1/2" NPTF (bottom)
R432037641 - 1/2 BSPP (side), 1/2 BSPP (bottom)

Left & Right End Plate Kit*
R432039423 - 1/2" NPTF
R432041043 - 1/2 BSPP

Port Plug, 1/2" NPTF:
Part No. R432027755

Pressure Separation Disc Part No.**
R432037662

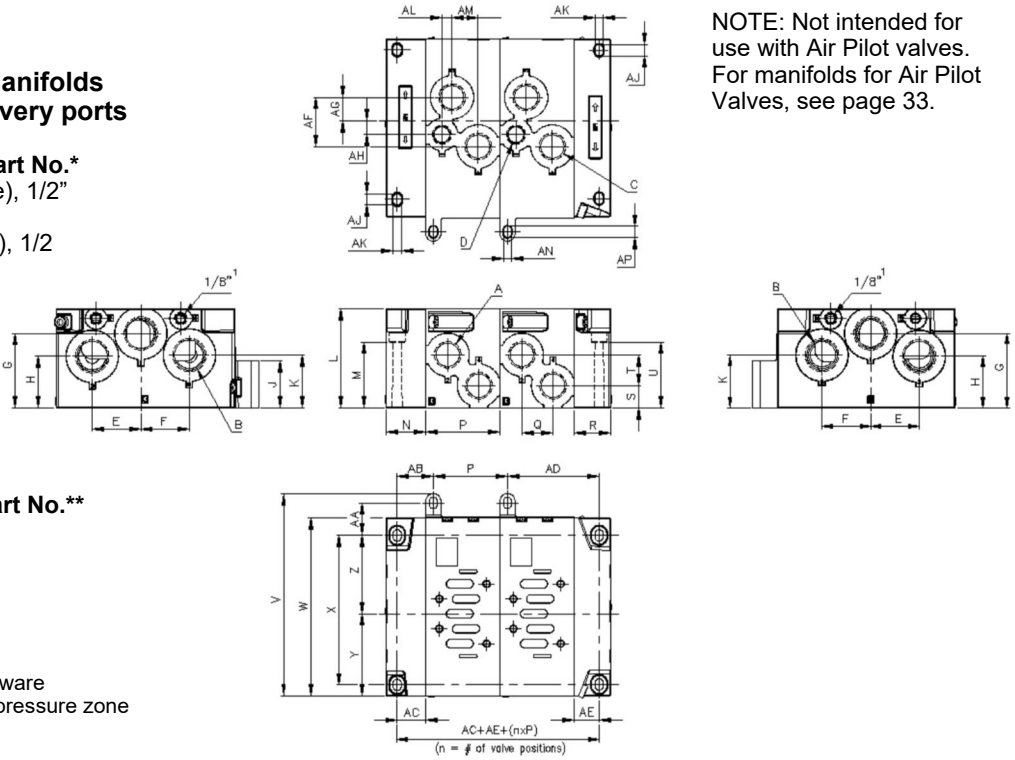

NOTE: Not intended for use with Air Pilot valves. For manifolds for Air Pilot Valves, see page 33.

*Includes gaskets and all hardware
** Includes 1 disc for multiple pressure zone

Size	A [1]	B [1]	C [1]	D [1]	E	F	G	H	J	K	L	M	N	P	Q	R	S	T	U
2	1/2	3/4	1/2	3/8	39	39	60	41.5	38	42.5	79.7	53	32	59.5	25	29.5	18	24.8	53

Size	V	W	X	Y	Z	AA	AB	AC	AD	AE	AF	AG	AH	AJ	AK	AL	AM	AN	AP
2	162.5	143	119.6	66	63	26.1	29	23	73.5	20	39.5	19	11	9.1	6.6	8.2	21	6.3	9.3

[1]Available IN G (BSPP) or NPTF threads
All dimensions in mm.

Ceram™ Valves, ISO 5599-1 Sizes 1-4
Manifold accessories, Size 2

ISO SIZE 2 ACCESSORIES

Sandwich Flow Controls (Meter Out Ports 3 & 5)

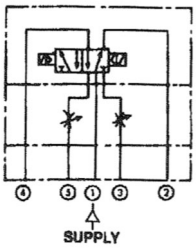

Our flow controls sandwich between the valve and subbase eliminating the need for additional piping and external controls for both working ports. Adjustment is with a knob on each side. A fine thread, along with our two stage needle design assures excellent control. Kit includes speed control (1), gasket (1), and screws (4),
Part No. 0821201024
Dimensions
Height: 0.98” (25mm)
Maximum Overall Length: 4.02” (102mm)



Single Sandwich Regulator
Ideal for applications within a manifold where a particular pressure is required for one or more valves. Our regulator controls inlet pressure through to each cylinder port or delivery port pressures independently. A relieving type, the knob will also lock into a given position. Kit includes regulator (1), gasket (1), and screws (4)

Port Regulation	Part Number	(10-120 psi)
1	R422103092	
2	R422103093	

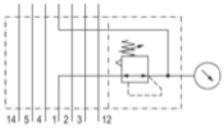

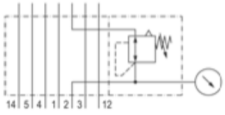



Dimensions:
Height: 2.00” (50.9mm)
Max Overall Length: 9.01” (228.9mm)
Optional design (w/o gauge, 1/8” NPT gauge port):
R432009192 (Port 1, 5-60 psi)
R432030015 (Port 1, 3-30 psi)

ISO SIZE 2 ACCESSORIES

Dual Sandwich Regulator (Ports 2 & 4)
Our pressure regulators sandwich between the valve and subbase eliminating the need for additional piping. Ideal for applications within a manifold where independent regulation of two supply pressures is required; no external pilot supply is required if minimum pilot pressure is available. Lip seal opens when downstream pressure is >30 psi than upstream pressure to allow reverse flow. With locking adjustment knobs at "Control 12" for port 2 and "Control 14" end for port 4. Kit includes regulator (1), gasket (1), and screws (4)

Part No. R422103094 (10-120 psi)
Dimensions:
Height: 2.00” (50.9mm)
Max Overall Length: 15.29” (388.3mm)

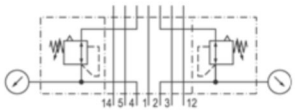

Optional design (w/o gauge):
(1/8” NPT gauge ports)
R432015495 (5-60 psi)



Maintenance Plate (Size 1, 2, 3)
Mounts between valve and sub-base. Used when servicing individual valves in a manifold system, or replacing a cylinder while the rest of the system is still operating. Two positions, can be locked with a cotter pin:
0. Maintenance position, flow is minimal and valve is isolated§;
1. Open position, normal operation - full flow in the system.
§ The low flow in the maintenance position allows slow pressurizing when the valve is returned to service. This low flow also requires the removal of trapped downstream pressure before removing or servicing these same components.
CAUTION: Before service or removal of any components, all trapped pressure must be released. Vertically mounted cylinders, gravity and mechanically loaded actuators must be blocked/disable to avoid injury or system damage. Install blanking station segment kit if this minimal flow is undesirable when the valve is not present.
Material: Aluminum, black anodized.
Pressure range: Vacuum to 150 psi. *dim= IN (mm)*

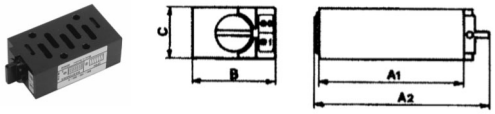

Ceram™ Valves, ISO 5599-1 Sizes 1-4
Manifold accessories, Size 2

ISO SIZE 2 ACCESSORIES (continued)

Sandwich Auxiliary Pressure Block (Port 1)

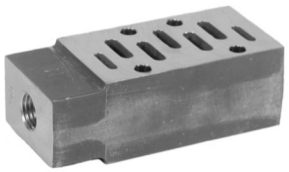

The separate pressure block allows for more than two pressures to be provided to a manifold of valves. This unit sandwiches between the valve and base. Pressure to the balance of the manifold is isolated. Kit includes plate (1), gasket (1), screws (4).

For photos, see Size 1 accessories section.
Dimensions
Height: 1.54” (39.1mm)
Maximum Overall Length: 4.28” (108.7)
1/2”-14 NPT INLET

Part No. R432015769*
Part No. R432015770*
(Allows 3 or more pressures to be applied to the same manifold assembly. See manifold assembly page.)
R432015769: auxiliary press. Supply blocked from manifold base port 1 channel
R432015770: auxiliary press. Supply open to valve AND manifold base port 1 channel

Size 2 Blanking Plate Kit
Allows for valve to be added later
Can be removed to add valve to existing manifold.
Kit includes plate (1), gasket (1), screws (4).
Shown on 1/4” base.

Part No. 5802870000



ISO 5599-1 TRANSITION PLATE KIT
ISO Size 2 to ISO Size 3
Dimensions: 6.5” x 1.2” x 3.9”
Part No - R432037657

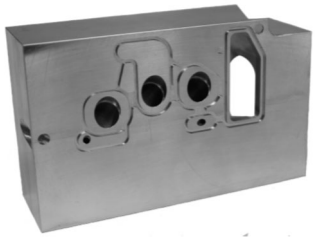

Ceram™ Valves, ISO 5599-1 Sizes 1-4
Subbases and manifold, Size 3

ISO SIZE 3 SUBBASES

Single Subbase (side ported)
1/2" or 3/4" NPT or G (BSPP) ports

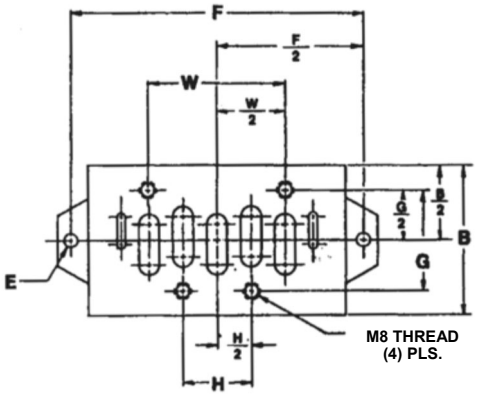

DIM	A	B	C	D	E	F	G	H	J
IN	5.87	2.80	1.97	0.71	0.26 dia.	5.34	1.89	1.26	3.15
mm	149.0	71.0	50.0	18.0	6.6 dia.	136.0	48.0	32.0	80.0

DIM	K	P	R	S	T	U	V	W
IN	4.72	1.42	0.79	1.58	3.62	1.22	0.79	2.52
mm	120.0	36.0	20.0	40.1	92.0	31.0	20.0	64.0

SIDE VIEW

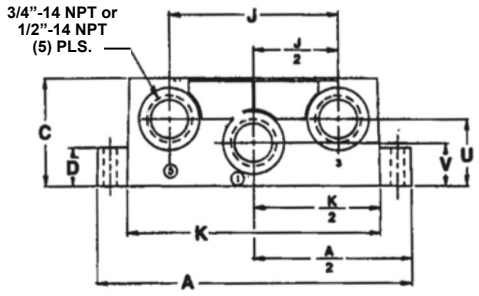

SIDE VIEW (FROM OTHER SIDE)

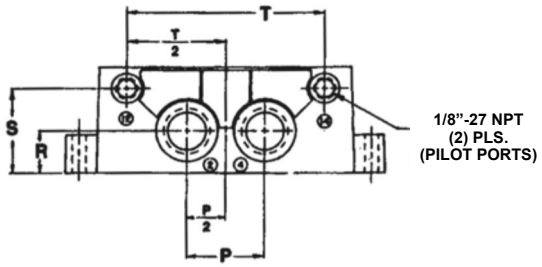

Part No. R432015308 - port Size 1/2" NPTF
R432015309 - port Size 3/4" NPTF
1825503149 - port Size G 1/2 (BSPP)
R432009166 - port Size G 3/4 (BSPP)

ISO SIZE 3 MANIFOLDS

End and Bottom Ported Manifolds
3/4" & 1" NPT or G (BSPP) delivery ports

Manifold Station Segment Part No.*
R432037644 - 3/4" NPTF (side), 3/4" NPTF (bottom)
R432037643 - 3/4 BSPP (side), 3/4 BSPP (bottom)

Left & Right End Plate Kit*
R432039657 - 1" NPTF
R432041044 - 1 BSPP

Port Plug, 1" NPTF:
Part No. R432027756

Pressure Separation Disc Part No.**
R432037663

*Includes gaskets and all hardware
** Includes 1 disc for multiple pressure zone

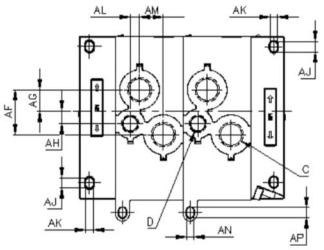

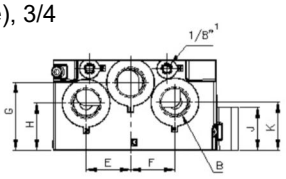

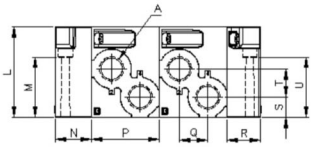

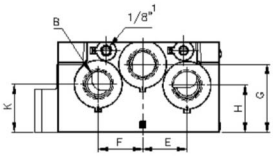

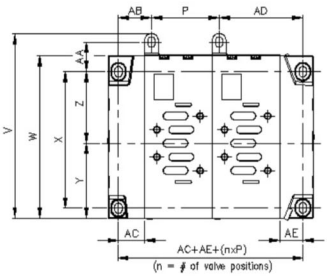

NOTE: Not intended for use with Air Pilot valves. For manifolds for Air Pilot Valves, see page 34.

Silencers
1/2" NPT Silencer, Part No. R432011952
3/4" NPT Silencer, Part No. R432012059
G 1/2 Silencer, Part No. R412010247
G 3/4 Silencer, Part No. R412010248

Size	A [1]	B [1]	C [1]	D [1]	E	F	G	H	J	K	L	M	N	P	Q	R	S	T	U
3	3/4	1	3/4	1/2	49	49	76	53	32	53	100	88	37	80	38	36	24.5	20.5	88

Size	V	W	X	Y	Z	AA	AB	AC	AD	AE	AF	AG	AH	AJ	AK	AL	AM	AN	AP
3	183	164.7	99	72	73	30.5	28	22	96	22	46.3	25.1	11.2	6.8	6.8	15.8	22.5	6.3	9.3

[1] Available IN G (BSPP) or NPTF threads
All dimensions in mm.

Ceram™ Valves, ISO 5599-1 Sizes 1-4

Subbases and manifold accessories, Size 3

ISO SIZE 3 ACCESSORIES

Single Sandwich Regulator

Ideal for applications within a manifold where a particular pressure is required for one or more valves. Our regulator controls inlet pressure through to each cylinder port or delivery port pressures independently. A relieving type, the knob will also lock into a given position. Kit includes regulator (1), gasket (1), and screws (4)

Port Regulation	Part Number	(10-120 psi)
1	R422103096	
2	R422103097	

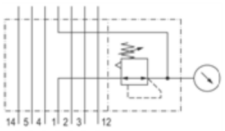

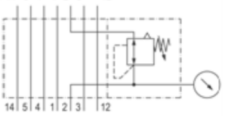



Dimensions:
Height: 2.76” (70mm)
Max Overall Length: 11.37” (288.8mm)
Optional design (w/o gauge, 1/8” NPT gauge port):
R432009194 (Port 1, 5-60 psi)
R432009195 (Port 1, 3-30 psi)

ISO SIZE 3 ACCESSORIES

Dual Sandwich Regulator (Ports 2 & 4)

Our pressure regulators sandwich between the valve and subbase eliminating the need for additional piping. Ideal for applications within a manifold where independent regulation of two supply pressures is required; no external pilot supply is required if minimum pilot pressure is available. Supplying ports 2 and 4, free flow reverse check valves allow flow in both directions. With locking adjustment knobs at "Control 12" for port 2 and "Control 14" end for port 4. Kit includes regulator (1), gasket (1), and screws (4)

Part No. R422103098 (10-120 psi)
Dimensions:
Height: 2.76” (70mm)
Max. Overall Length:
18.46” (469mm)
Optional design (w/o gauge):
(1/8” NPT gauge port)
R432009411 (5-60 psi)

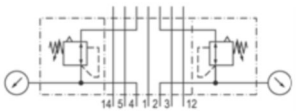



Maintenance Plate

Mounts between valve and sub-base. Used when servicing individual valves in a manifold system, or replacing a cylinder while the rest of the system is still operating. Two positions, can be locked with a cotter pin:
0. Maintenance position, flow is minimal and valve is isolated§;
1. Open position, normal operation - full flow in the system.
§ The low flow in the maintenance position allows slow pressurizing when the valve is returned to service. This low flow also requires the removal of trapped downstream pressure before removing or servicing these same components.
CAUTION: Before service or removal of any components, all trapped pressure must be released. Vertically mounted cylinders, gravity and mechanically loaded actuators must be blocked/disable to avoid injury or system damage. Install blanking station segment kit if this minimal flow is undesirable when the valve is not present.
Material: Aluminum, black anodized.
Pressure range: Vacuum to 150 psi. *dim= IN (mm)*

ISO	Part Number	A1	A2	B	C
3	580 359 000 0	4.65 (118)	5.39 (137)	2.56 (65)	1.42 (36)

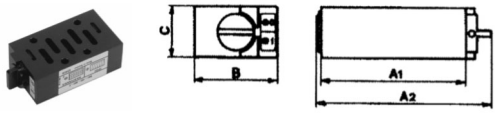

Blanking Plate Kit - Size 3

Allow for valve to be added later. Kit includes plate, gasket and screws.
Part No. 5803870000



Silencers

1/2" NPT Silencer, Part No. R432011952
3/4" NPT Silencer, Part No. R432012059

Metric manifolds and subbases are available from online catalog at www.aventics.com/pneumatics-catalog

Sandwich Flow Controls (Meter Out Ports 3 & 5)

Our flow controls sandwich between the valve and subbase eliminating the need for additional piping and external controls for both working ports. Adjustment is via a screw on each side, assuring excellent control. Kit includes speed control (1), gasket (1) and screws (4).
Part No. R432008895
Dimensions
Height: 0.94" (23.9mm)
Maximum Overall Length: 6.44" (163.6mm)
Width: 2.50" (63.5mm)

(Cannot be combined with sandwich regulator.)

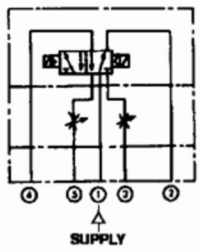

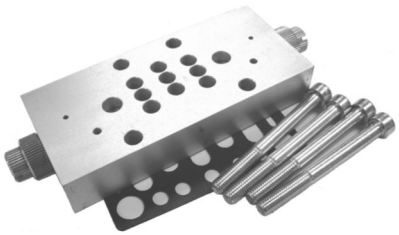

Ceram™ Valves, ISO 5599-1 Sizes 1-4

Subbases, Size 4

ISO SIZE 4 MANIFOLDS

Manifold Station Segment Part No.*
R432039362 - 3/4” NPTF (bottom)
8985041422- 3/4 BSPP (bottom)

End Plate Kit Part No.*
R432039363 - 1” NPTF
8985041442 - 1 BSPP

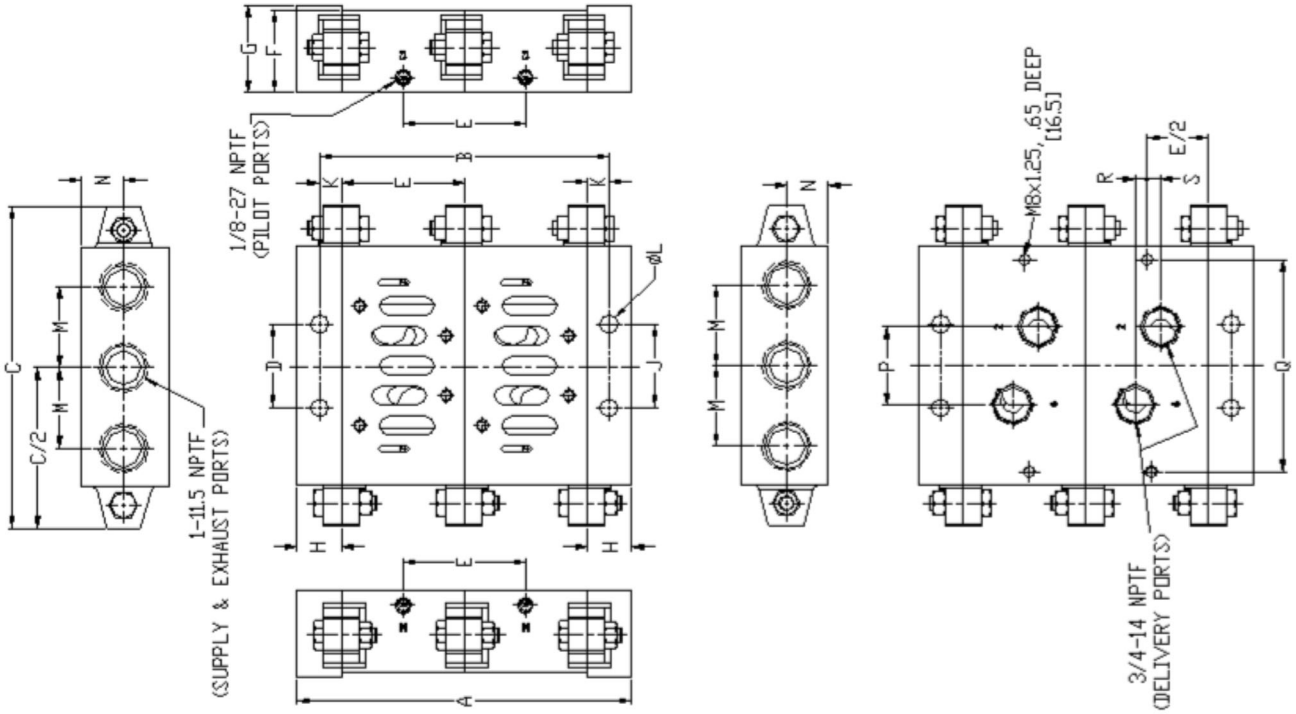

* Includes gaskets and all hardware

DIM	C	D	E	F	G	H	J	K	L	M	N	P	Q	R	S
IN	8.46	6.30	3.23	2.17	2.28	1.18	2.20	.59	.47	2.13	1.10	2.05	5.59	.31	.35
mm	215	160	82	55	58	30	56	15	12	54	28	52	142	8	9

Silencers
1" NPT Silencer, Part No. R432012057
G 1 Silencer, Part No. R412010249

Ceram™ Valves, ISO 5599-1 Sizes 1-4
Subbases and manifold accessories, Size 4

ISO SIZE 4 SUBBASES

Single Subbase (side ported) 1” NPT ports

TOP VIEW

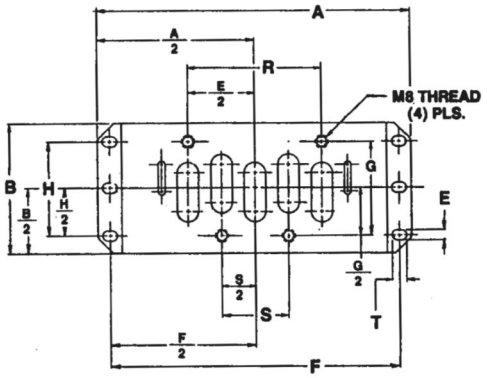

SIDE VIEW

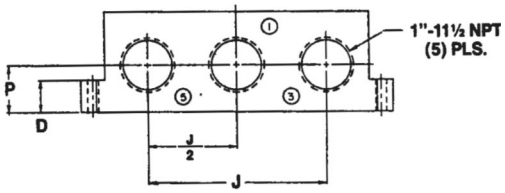

SIDE VIEW (FROM OTHER SIDE)

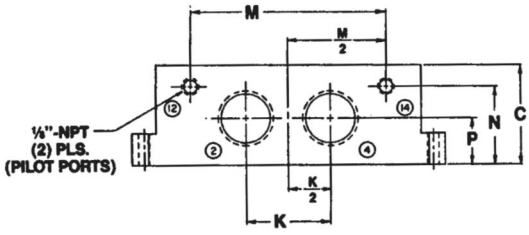

Part No. R432031847 - Port Size 1”

DIM	A	B	C	D	E	F	G	H	J
IN	7.32	3.15	2.44	.71	.26	6.77	2.28	1.97	4.17
mm	186.0	80.0	62.0	18.0	6.5	172.0	58.0	50.0	106.0

DIM	K	M	N	P	R	S	T
IN	1.97	4.57	1.85	1.10	3.15	1.58	.33
mm	50.0	116.0	47.0	28.0	80.0	40.0	8.5

Silencer
1" NPT Silencer, Part No. R432012057

Size 4 Metric ported subbase, G 3/4 ports (G 1/8 pilot ports):
Part number 8985041404
Dimensions available from online catalog.

ISO SIZE 4 ACCESSORIES

Sandwich Flow Controls (Meter Out Ports 3 & 5)

Dimensions
Height: 0.94”
Maximum Overall Length: 7.75”
Width: 3.00”

Our flow controls sandwich between the valve and subbase eliminating the need for additional piping and external controls for both working ports. Adjustment is via a screw on each side, assuring excellent control. Kit includes speed control (1), gasket (1), and screws (4).

Part No. R432009004

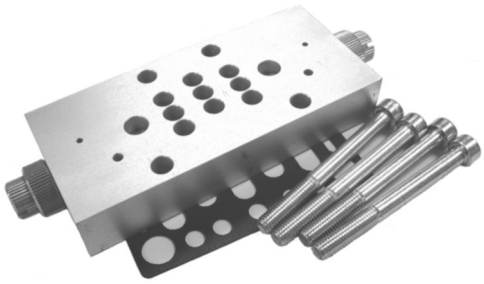

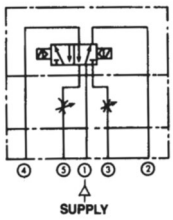

Blanking Plate Kit - Size 4
Allows for valve to be added later. Kit includes plate, gasket and screws.
Part No. 5804870000



Air Pilot Valve Manifolds
Size 1 - 3

ISO SIZE 1 MANIFOLDS

End Ported Manifolds
1/4” NPT delivery ports

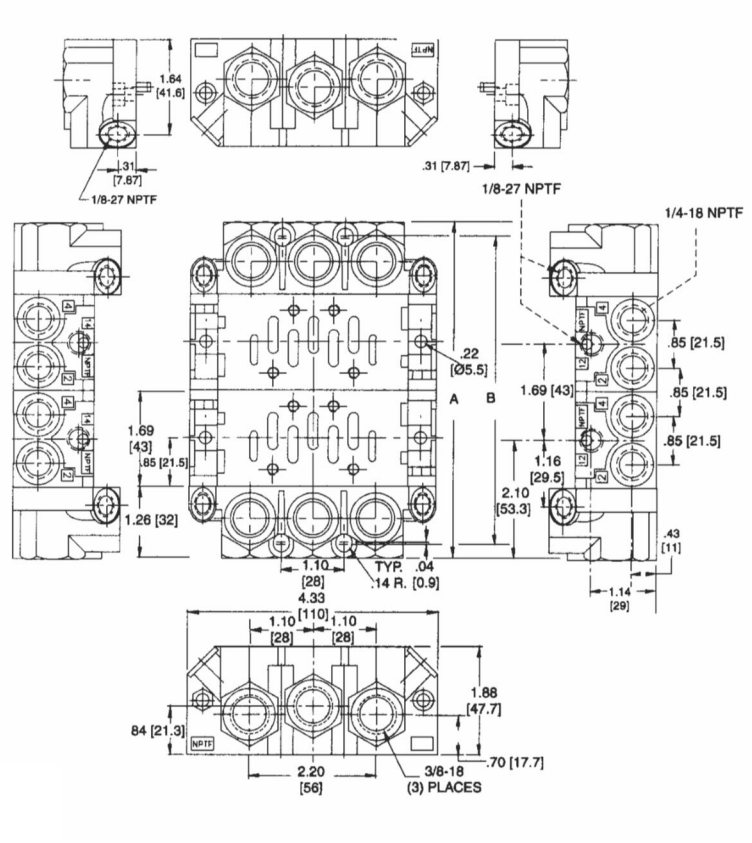

Part Number R432015314* - Manifold Station Segment**
Part Number R432015316* - End Plates (Includes both ends)**

DIM	NUMBER OF VALVES													
	2		3		4		5		6		7		8	
A	IN	mm	IN	mm	IN	mm	IN	mm	IN	mm	IN	mm	IN	mm
	5.91	150.0	7.60	193.0	9.29	236.0	10.9	322.0	12.6	322.0	14.37	365.0	16.0	408.0
B	5.39	136.8	7.08	179.8	8.77	222.8	10.4	265.8	12.1	308.8	13.85	351.8	15.5	394.8

*Manifold gaskets included.
**All hardware is included.

END PORTED MANIFOLDS

STATION SEGMENT (R432015314)

Each station segment kit comes complete with pipe plugs (to block unused delivery ports), fastening hardware, and a gasket. The gasket is placed between each station segment. The standard sealing gasket (A GASKET, PART NUMBER - R432008985) including has windows open for ports 1,3, & 5

END PLATE KITS (R432015316)

Consists of two end plates complete with pipe plugs (to block unused supple and exhaust ports), fastening hardware, and the standard sealing gasket (A GASKET, Part Number - R432008985)

MANIFOLD WITH TWO DIFFERENT SUPPLY PRESSURES

Different supply pressures can be provided by placing blocking gasket B (1821015043) between two of the station segments to divide the two different pressures.

BLOCKING GASKET A
R432008985

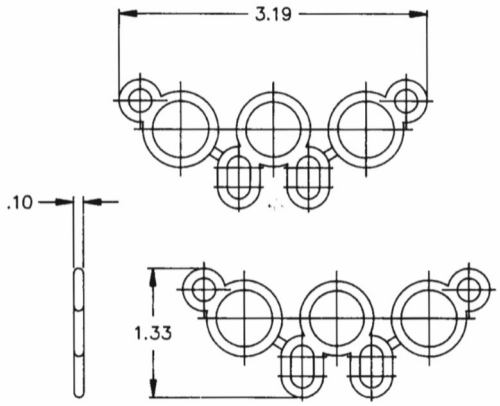

BLOCKING GASKET B
1821015043

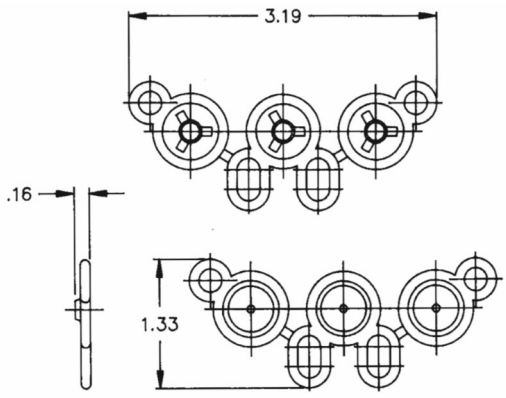

Air Pilot Valve Manifolds
Size 1 - 3

ISO SIZE 2 MANIFOLDS
End Ported Manifold
1/2" NPT delivery port

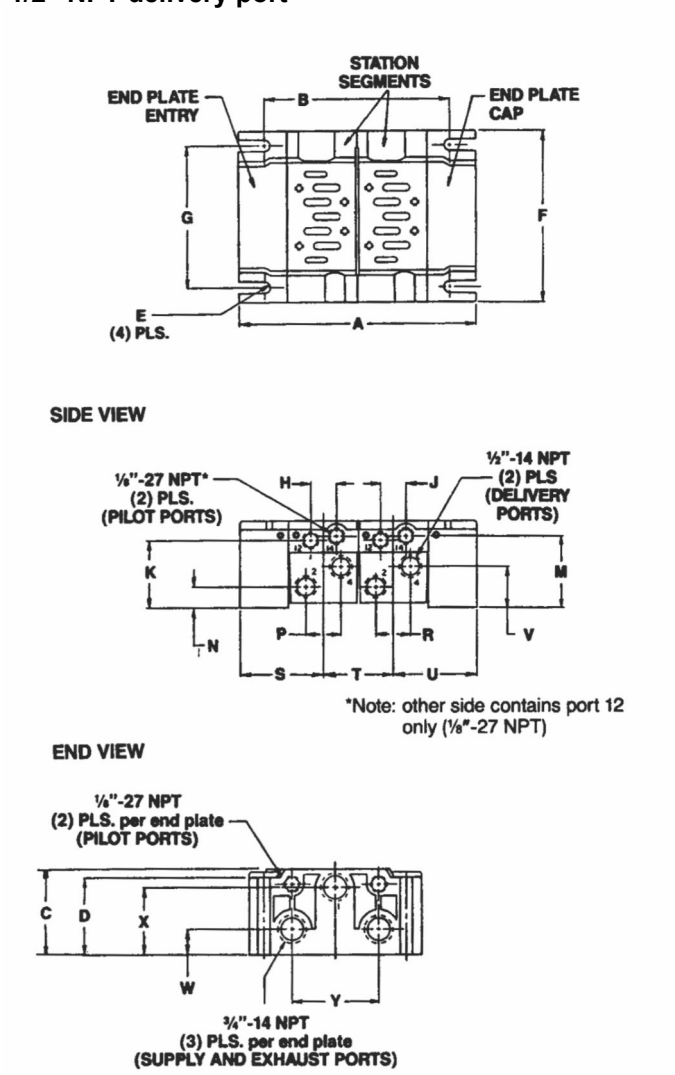

Part Number R432015318* - Manifold Station Segment
Part Number R432015319 - End Plates (Includes both ends)**

DIM	C	D	E	F	G	H	J	K	M	N
IN	3.15	2.82	.17R	4.96	7.09	.79	.79	2.52	2.68	.67
mm	80.0	71.6	R4.3	126.0	104.0	20.0	20.0	64.0	68.0	17.0

DIM	P	R	S	T	U	V	W	X	Y
IN	1.02	1.02	2.68	2.20	2.68	1.42	1.18	2.44	2.44
mm	26.0	26.0	68.0	56.0	68.0	36.0	30.0	62.0	62.0

DIM	NUMBER OF VALVES													
	2		3		4		5		6		7		8	
A	IN	mm	IN	mm	IN	mm	IN	mm	IN	mm	IN	mm	IN	mm
	7.56	192.0	9.76	248.0	11.97	304.0	14.17	360.0	16.38	416.0	18.58	472.0	20.79	528.0
B	6.01	168.0	8.82	224.0	11.00	279.4	13.23	336.0	15.43	392.0	17.64	448.0	19.84	504.0

*Manifold gaskets included.
**All hardware is included.

AVENTICS END PORTED MANIFOLDS

STATION SEGMENT

Each station segment kit comes complete with hardware, seals, and a sealing plate. The sealing plate is placed between each segment to ensure sealing between the Buna N gaskets. The standard sealing plate (PLATE A) included has windows open for ports 1,3, & 5.

END PLATE KITS

Consists of two end plates complete with hardware and seals. Pressure is blocked on Size II end plates with 3/4" pipe plugs (included).

MANIFOLD WITH TWO DIFFERENT SUPPLY PRESSURES

On size 2 manifolds, place plate B where the pressure division is desired and remove pipe plugs from the end cover.

PLATE A
1, 3, & 5 Open
R432015343

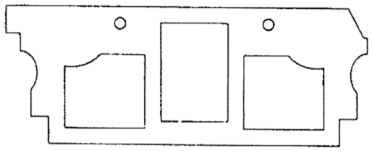

PLATE B
All ports blocked
R432015342

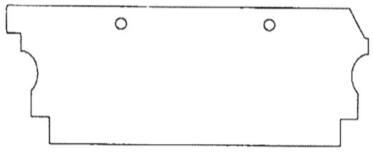

PLATE C
1, 3, 5, 12 & 14 Open
R432015344

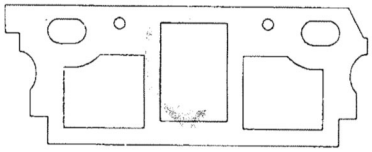

Air Pilot Valve Manifolds
Size 1 - 3

ISO SIZE 3 MANIFOLDS
1/2” or 3/4” NPT Delivery Ports

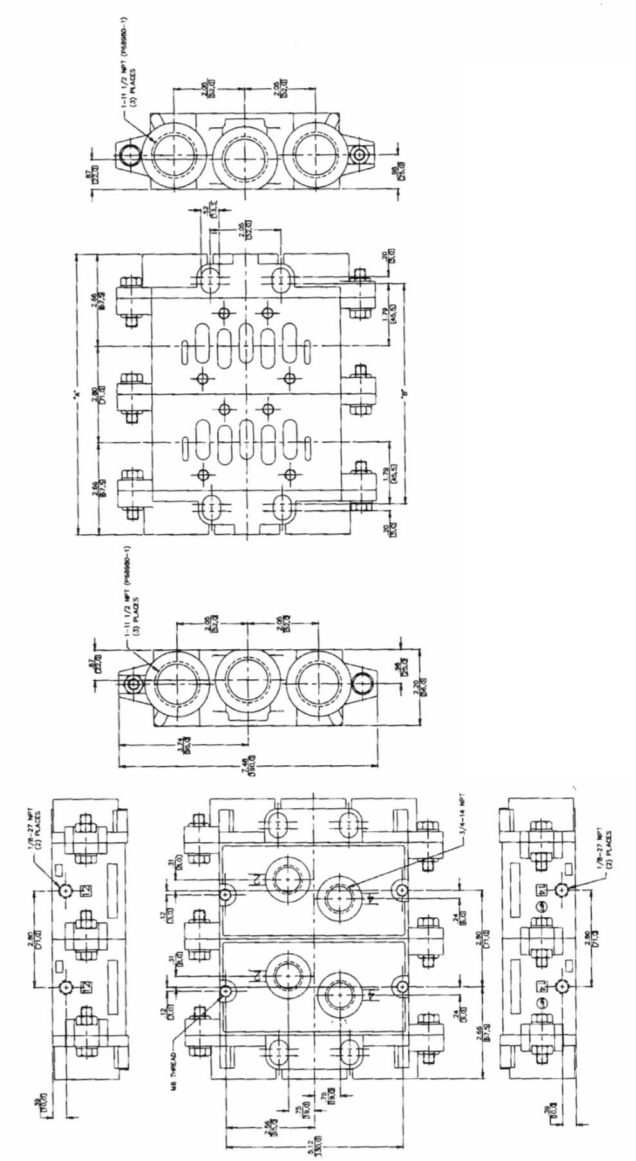

Part No. R432015491 - Manifold Station Segment (1/2” NPT)
Part No. R432015490 for 3/4” NPT Delivery Ports
Part No. R432015492 - End Plates (includes both ends)

DIM	NUMBER OF VALVES													
	2		3		4		5		6		7		8	
A	IN	mm	IN	mm	IN	mm	IN	mm	IN	mm	IN	mm	IN	mm
	8.10	205.7	10.90	276.9	13.70	348.0	16.50	419.1	19.30	490.2	22.10	561.3	24.90	632.5
B	6.38	162.1	9.18	233.2	11.98	304.3	14.78	375.4	17.58	446.5	20.38	517.7	23.18	588.8

Ceram™ Valves, ISO 5599/1 Sizes 1-4

Pressure gauges for sandwich regulators

Figure 1



Figure 2



Compressed Air Connection		Nominal diameter	Application	Display range	Operating pressure	Scale value	Part No.	Figure
Size	Location							
R 1/8	Bottom	50 mm	0 - 10 bar	0 - 12 bar	0 / 12 bar	0.2 bar	8901703200	1
G 1/8	Back	40 mm	0 - 8 bar	0 - 10 bar	0 / 10 bar	0.2 bar	R412003857	2
1/8” NPT	Back	1.58”	0 - 150 psi	0 - 200 psi	0 / 200 psi	5 psi	R412010064	2

Ceram™ Valves, ISO 5599/1 Sizes 1-4

Internal to external pilot field conversions, Sizes 1 and 2

GT Series Size 1 and GS Series Size 2 Valves

**** Solenoid Valve Internal To External Pilot Field Conversion****
CAUTION: Air Supply should be removed before modification.

EXTERNALLY PILOTED VALVES ARE AVAILABLE DIRECTLY FROM THE FACTORY. See model explanation on page 7 as well as individual notes on pages 8-14 under standard valve models for ordering instructions.
The following procedure should be used to convert a solenoid valve from internal pilot pressure operation. All valves come from the factory internally piloted. External pilot function is required if the supply pressure is below the minimum pilot pressure of 29 psi (2-position valves; 44 psi for 3-position models) or if the customer is using vacuum for supply pressure.

SIZE 1 GT SERIES VALVE
EXTERNAL PILOT CONVERSION

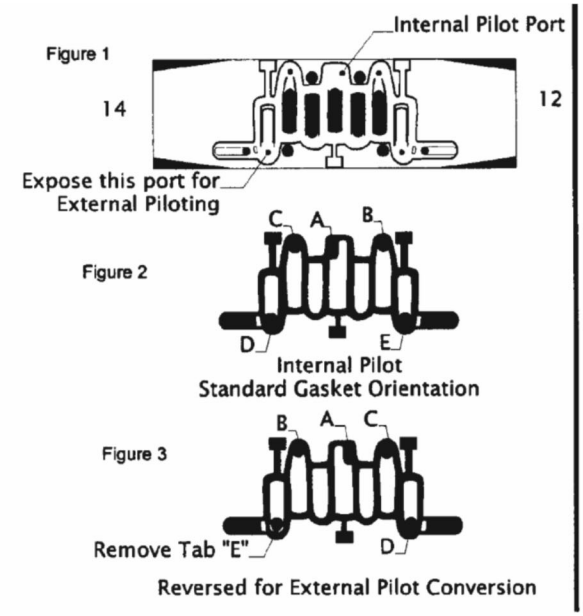

SIZE 2 GS SERIES VALVE
EXTERNAL PILOT CONVERSION

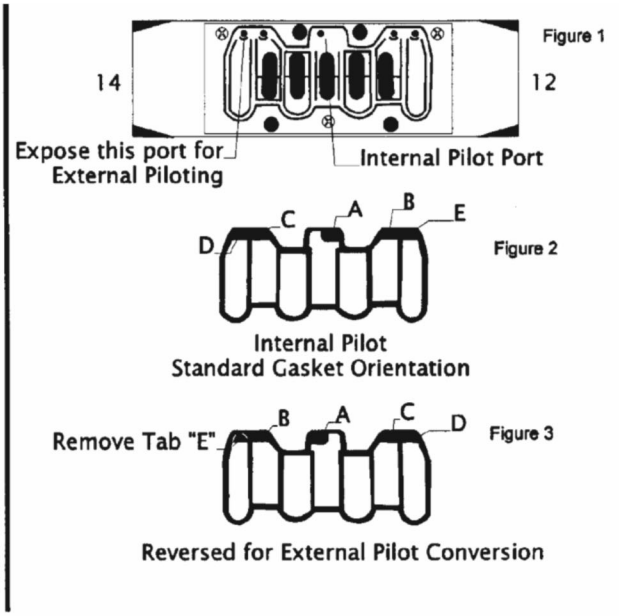

For external pilot conversion, remove gasket from valve body as shown in Figure 1 and 2. Flip gasket end-to-end so that Tab “A” will cover the internal pilot port shown in Figure 1. Remove Tab “E” shown in Figure 2. Mount valve to base.
Apply a minimum of 29 psi (2-position valves) or 44 psi (3-position valves) to Port 14. Port 14 will provide pilot pressure to all solenoids regardless of single or double configuration.
NOTE: Port 12 does not need to be plugged. Port 12 is used only on Double Air Pilot models.

Note: This page does not apply to air piloted/air spring return valves.

Ceram™ Valves, ISO 5599/1 Sizes 1-4

Internal to external pilot field conversion, Sizes 3 and 4

Internal to External Pilot Conversion, Size 3 & 4

GASKET ORIENTATION INFORMATION FOR REPAIR OF EXTERNAL PILOT CONVERSION

CAUTION: Air supply should be removed before modification.
EXTERNALLY PILOTED VALVES ARE AVAILABLE DIRECTLY FROM THE FACTORY. See model explanation on page 7 as well as individual notes on pages 8-14 under standard valve models for ordering instructions.
The following procedure should be used to convert a solenoid valve from internal pilot to external pilot pressure operation. All valves come from the factory internally piloted. External pilot function is required if the supply pressure is below the minimum pilot pressure of 29 psi (2-position valves; 44 psi for 3-position models) or if the customer is using vacuum for supply pressure.

Reorient the gaskets located underneath the blue saddle cover. Pneumatic symbols are stamped on the cover of the valve to indicate which function have been chosen. The black corner tab of each gasket is visible through a hole (in the cover) located by the symbol of the operator chosen. As you can see by the diagram below, each outside operator gasket can be rotated in one of four positions (details A, B, C, or D).

Also shown is the common pilot gasket which can be rotated in two positions (details E & F). This gasket should always be in the "E" position except for double solenoid (external pilot) with a common pilot. Port 12 or 14 must be used for the common pilot, but the other unused port must be blocked. For separate pilot pressures, continue to use position E.

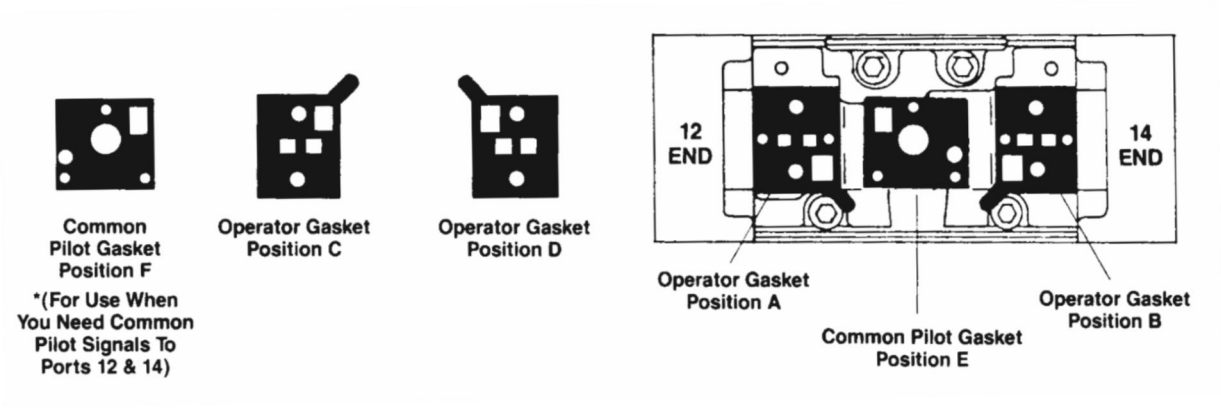

OPERATOR COMBINATION DESIRED	12 END	COMMON PILOT GASKET	14 END
Single Solenoid (internal pilot)/metal spring return	C	E	B
Single Solenoid (internal pilot)/air spring return (internal)	B	E	B
Single Solenoid (internal pilot)/air spring return (external)	D	E	B
Single Solenoid (external pilot)/metal spring return	C	E	D
Single Solenoid (external pilot)/air spring return (internal)	B	E	D
Single Solenoid (external pilot)/air spring return (external)	D	E	D
Double Solenoid (internal pilot) 2 & 3 position	A	E	B
***Double Solenoid (external pilot) 2 & 3 position**	C	F	D
Air Pilot/Metal Spring	C	E	C
Air Pilot/Air Spring (internal)	B	E	C
Air Pilot/Air Spring (external)	D	E	C
Double Air Pilot 2 & 3 positions	D	E	C

*NOTE: Position "F" for double solenoid external pilot supply only. All other valve models use position "E."

Ceram™ Valves, ISO 5599/1 Sizes 1-4
Piping procedures

Piping Instructions - All Sizes (1, 2, 2, 4)
CAUTION: Air supply should be removed before modification.

Normal Piping Procedure

Use these connections if you have one supply pressure only.

Single Pressure

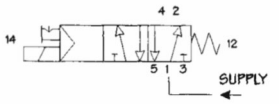

Port	Marking
1=	Supply Pressure
2 & 4=	Delivery (Cylinder) Ports
3 & 5=	Exhaust Ports
12 & 14=	External Pilot Ports

Dual Pressure Piping Procedure

2 Position Valve Piping. (Do not use unless you must use 2 different supply pressures.)

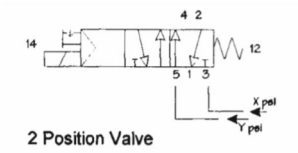

2 Position Valve

Port	Marking
1=	Common Exhaust Port
2 & 4=	Delivery (Cylinder) Ports
3 & 5=	Supply Pressures
12 & 14=	External Pilot Ports

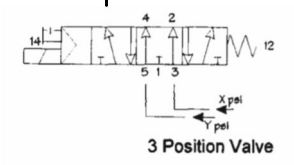

3 Position Valve

3 Position Valve Piping. (Use for supplied center or for 2 different supply pressure.)

Dual Pressure Valve Conversion Instructions (Size 1 & 2)

Please note that the supply pressure in Port 5 must be at least 29 psi (for 2-position models) or 44 psi (for 3-position models).
If minimum pressure is not met on port 5, external piloting must be used; see page 38 for directions.
Size 1 & 2 CERAM Valves are designed for dual pressure applications. For this service “replumb” the subbase by using ports “3” and “5” for the two different supplies, and port “1” for a common exhaust. (Ports “2” and “4” are still the delivery ports.) Port “3” will supply port “2”, and port “5” will supply port “4”. After the subbase has been “replumbed”, remove the valve from the subbase and remove the bottom gasket as shown in Figure 1 and 2. Flip the gasket end-to-end so the internal pilot hole will be covered by the gasket as shown in Figure 3. remove tab “B” as shown in Figure 3. Remount valve to base.

SIZE 1 GT SERIES VALVE
DUAL PRESSURE CONVERSION

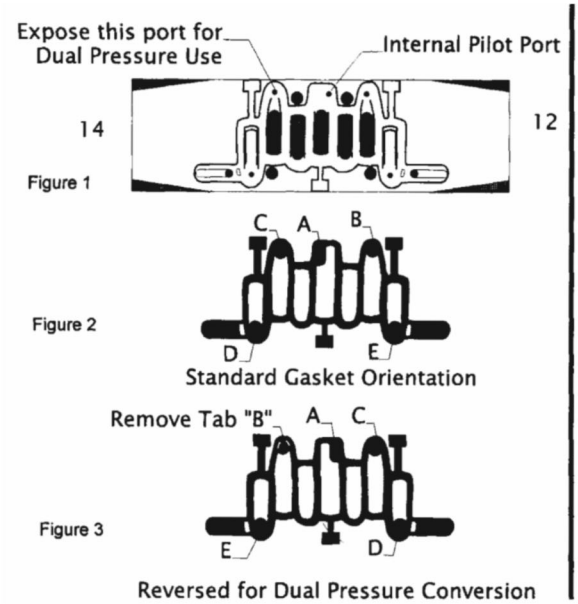

SIZE 2 GS SERIES VALVE
DUAL PRESSURE CONVERSION

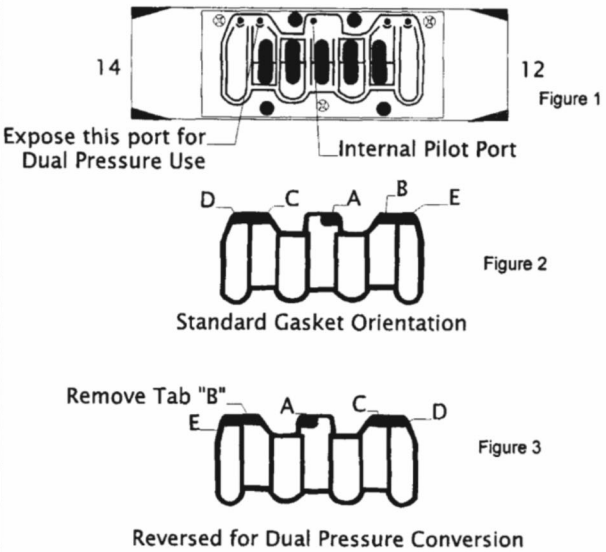

Dual Pressure Valve Conversion Instructions (Sizes 3 & 4)
Convert to external pilot according to instructions on previous page, then follow instructions at top right of this page.

Series DO10-MR Miniature Pneumatic Valves

Directional control, direct operated solenoid, 10mm body width



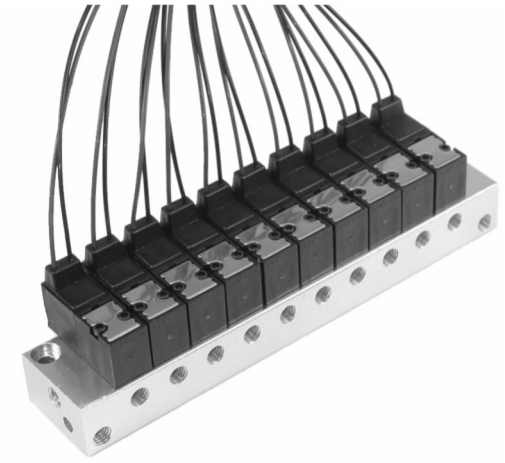

Version	Direct operated solenoid
Configurations	2/2 NC, 3/2 NC, 3/2 NO
Working pressure	0 to 102 psi (0 to 7 bar)
Orifice size	0.7 mm
Ambient temperature	23° to 122°F (-5° to +55°C)
Medium	Compressed air
Max. flow (at 6 bar, with press. Drop of 1 bar)	0.014C_v (14 Nl/min)
Exhaust flow	0.022C_v (22 Nl/min)
Manual override	Push type, non-locking
Max. no. of cycles per min.	2,700
Life expectancy	50 million cycles
Pneumatic ports	Single subbase, manifold
Electrical protection class	IP65 (NEMA 4)
Voltages	6, 12, 24VDC, other specials
Voltage tolerance	-5% to +10%
Coil insulation	F class standards
Switch (response) time	8 ms on 10 ms off
Power consumption	0.5 to 1.3 watts
Materials:	
Housing	Nylon
Seals	NBR
Springs	302 stainless steel

Normally closed NC 3/2

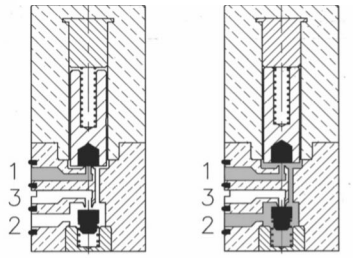

De-Actuated **Actuated**

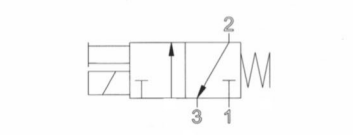

Normally open NO 3/2

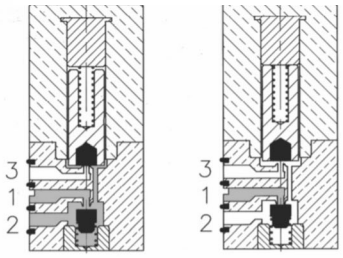

De-Actuated **Actuated**

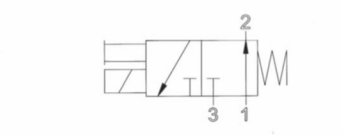

Normally closed NC 2/2

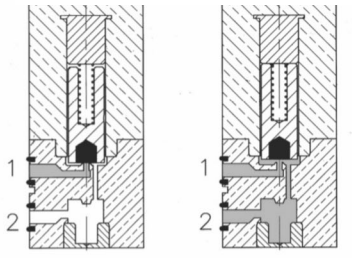

De-Actuated **Actuated**

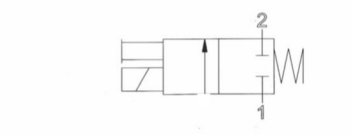

1 = Supply Port
2 = Outlet Port
3 = Exhaust Port

Series DO10-MR Miniature Pneumatic Valves

Directional control, direct operated solenoid, 10mm body width

Model Code/Ordering Options

MR10-_ _ _ _ - _

Type	Voltage	Electrical Connection	Open Exhaust
1 = 2/2 NC	1 = 24 VDC	1 = 2-pin 90° Conn. with LED	S = Standard (channeled exhaust)
20 = 3/2 NC	2 = 12 VDC	2 = Flying leads (300mm)	E = Open exhaust (only NC types)
3 = 3/2 NO	3 = 24 VAC	3 = 2-pin 180° Conn. + LED	
	4 = 6 VDC	4 = 2-pin 90° Conn., no LED	
	5 = 24 VDC (0.5 watt)	5 = 2-pin 180° Conn., no LED	
		6 = 100mm cable + Molex male conn.*	
		7 = 100mm cable + MODU II conn.*	
		8 = 100mm cable + Molex female conn.*	
		9 = M3 threaded ports for inline use (no subbase needed) and open exhaust	

Example: MR10-211-E = 10mm valve, 3/2 NC, 24VDC, 2-pin 90° connector with LED, open exhaust
Note: Items highlighted in grey are standard, other options available upon request, contact Technical Support at the factory.
*Molex male connector = Molex part number 51006-0200. Molex female connector = Molex part number 51065-0200. MODU II connector = Tyco part number 280358-0.

Part Number to Model Number Crossover for DO10-MR Valves

Model Code	Part No.	Type	Voltage	Connector	Figure
MR10-111-S	R432033293	2/2 NC	24 VDC	90 + LED	1
MR10-112-S	R432033292	2/2 NC	24 VDC	300 mm cable	2
MR10-121-S	R432033291	2/2 NC	12 VDC	90 + LED	1
MR10-122-S	R432033290	2/2 NC	12 VDC	300 mm cable	2
MR10-211-S	R432033297	3/2 NC	24 VDC	90 + LED	1
MR10-212-S	R432033296	3/2 NC	24 VDC	300 mm cable	2
MR10-221-S	R432033295	3/2 NC	12 VDC	90 + LED	1
MR10-222-S	R432033294	3/2 NC	12 VDC	300 mm cable	2
MR10-311-S	R432033301	3/2 NO	24 VDC	90 + LED	1
MR10-312-S	R432033300	3/2 NO	24 VDC	300 mm cable	2
MR10-321-S	R432033299	3/2 NO	12 VDC	90 + LED	1
MR10-322-S	R432033298	3/2 NO	12 VDC	300 mm cable	2

Note: Scope of delivery includes mounting hardware.

Series DO10-MR Miniature Pneumatic Valves

Directional control, direct operated solenoid, 10mm body width

Figure 1: 2-pin 90° Connector

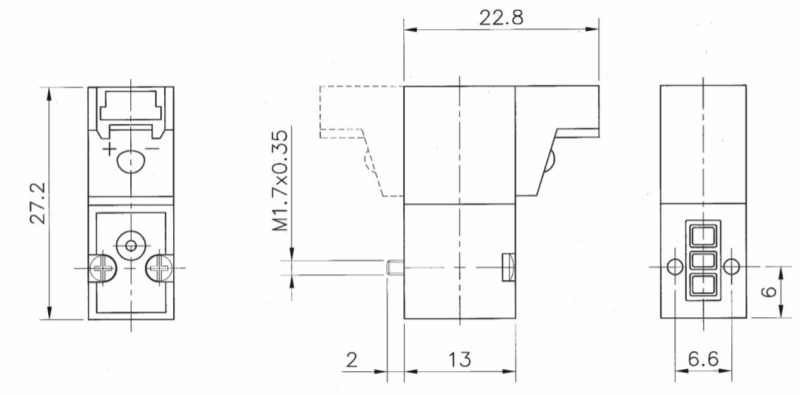

Figure 2: Flying leads (300mm)

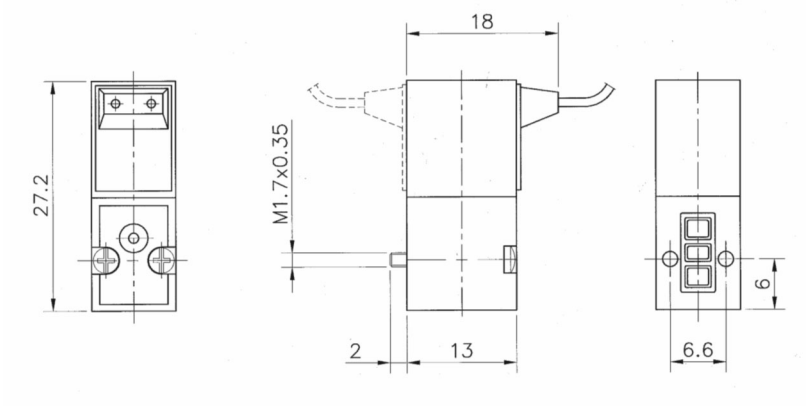

Series DO10-MR Miniature Pneumatic Valve

Directional control, direct operated solenoid, 10mm body width

Single subbase and manifold bases for DO10-MR valves

Part No.	No. of Stations	All Ports	Y (in)	Z (in)
R432033342	1	#10-32 (M5) thread	--	--
R432037207	2	#10-32 (M5) thread	1.60	1.280
R432037208	3	#10-32 (M5) thread	2.01	1.693
R432037209	4	#10-32 (M5) thread	2.43	2.106
R432037210	5	#10-32 (M5) thread	2.84	2.519
R432037211	6	#10-32 (M5) thread	3.25	2.932
R432037212	8	#10-32 (M5) thread	4.08	3.758
R432037213	10	#10-32 (M5) thread	4.90	4.584
R432037214	12	#10-32 (M5) thread	5.73	5.410
R432037215	14	#10-32 (M5) thread	6.56	6.236
R432037216	16	#10-32 (M5) thread	7.38	7.062
R432033341	Blanking plate	--	--	--

Note: Additional versions available, contact Technical Support at the factory

Single Subbase

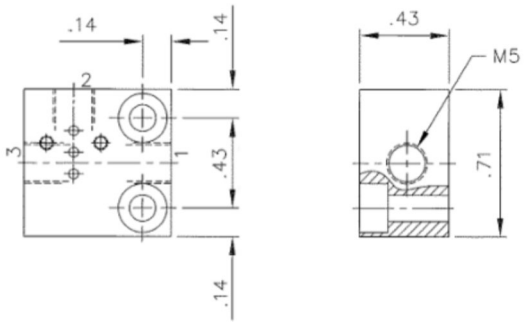

Manifold Bases

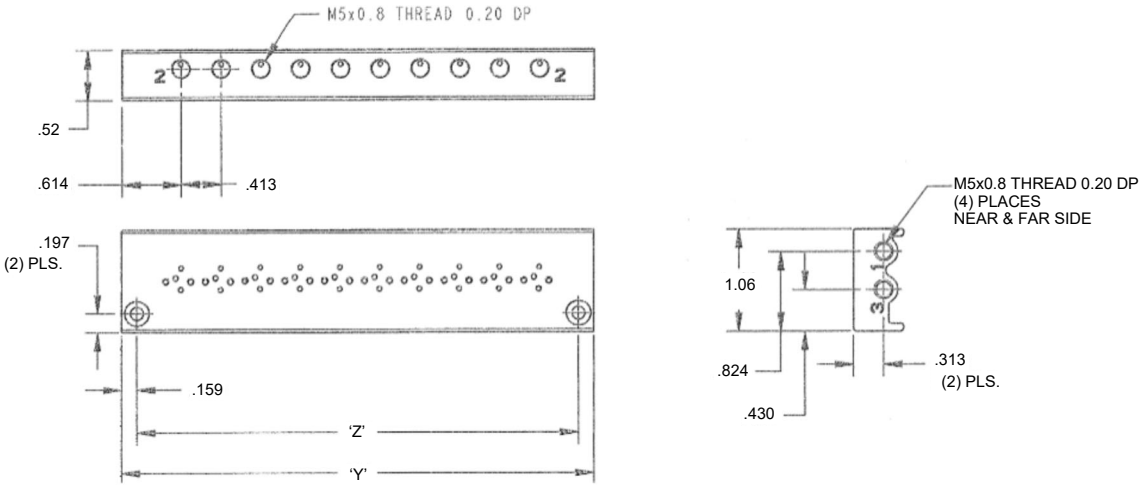

Series DO10-MR Miniature Pneumatic Valves

Directional control, direct operated solenoid, 10mm body width

Blanking plate for DO10-MR valves, Part no. R432033341



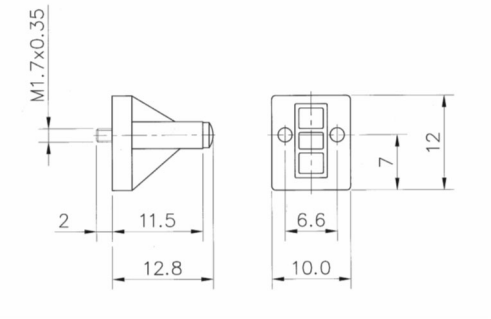

Connector Cables (for 2-pin connectors)



Part No.	Cable Length
R432033338	300mm
R432033339	600mm
R432033340	1 meter

Series DO15-MR Miniature Pneumatic Valves

Directional control, direct operated solenoid, 15mm body width





Version	Direct operated solenoid
Configurations	2/2 N/C, 2/2 NO, 3/2 NC, 3/2 NO
Working pressure	See table
Orifice size	0.8mm, 1.1mm and 1.6mm
Ambient temperature	23° to 122°F (-5° to +50°C)
Medium	Compressed air
Max. flow	See table
Exhaust flow	Push type, locking and non-locking
Manual override	2,700
Max. no. of cycles per min.	50 million cycles
Life expectancy	Single subbase, manifold
Pneumatic ports	IP65 (NEMA 4) w/ cables or connectors
Electrical protection class	IP00 without cables/connectors
	12 and 24VDC
Voltages	24, 110 & 220 VAC 50/60Hz
	-5% to +10%
Voltage tolerance	F class standards
Coil insulation	10 ms on
Switch (response) time	12 ms off
	See table
Power consumption	
Materials:	
Housing	Nylon
Seals	NBR
Springs	302 stainless steel

Orifice Size	Working pressure psi (bar) for NC	Working pressure psi (bar) for NO	Max. Flow C_v (Nl/min)*	Voltages VDC	Voltages VAC 50/60Hz	Power Watts (VDC)	Power VA (VAC)
0.8 mm	0 to 145 (0 to 10)	- -	0.02 (20)	24	- -	1.0	- -
1.1 mm	0 to 145 (0 to 10)	0 to 102 (0 to 7)	0.03 (30)	12 & 24	24, 110 & 220	2.3	2.8 VA at starting 2.5 VA at speed
1.6 mm	0 to 102 (0 to 7)	0 to 73 (0 to 5)	0.05 (50)	12 & 24	24, 110 & 220	2.3	2.8 VA at starting 2.5 VA at speed

*at 6 bar, with pressure drop of 1 bar

1 = Supply Port
2 = Outlet Port
3 = Exhaust Port

Normally closed NC 3/2

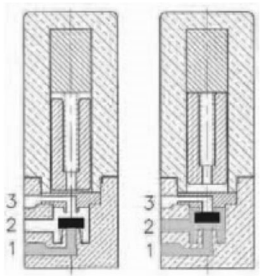

De-Actuated **Actuated**

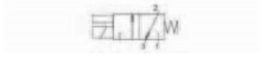

Normally open NO 3/2

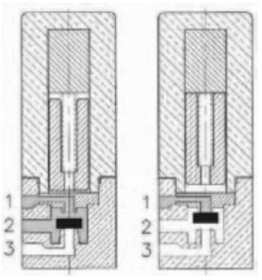

De-Actuated **Actuated**



Series DO15-MR Miniature Pneumatic Valves

Directional control, direct operated solenoid, 15mm body width

Model Code/Ordering Options

MR15- _ _ _ _ - _ _ _

Type	Voltage	Electrical Connection	Orifice Dia. (mm)	Manual Override	Open Exhaust
1 = 2/2 NC	1 = 24 VDC	0 = AMP Faston	A = 1.1 - 1.1	1 = Without man. override and M3 insert	S = Standard (channeled exhaust)
2 = 3/2 NC	2 = 12 VDC	1 = 2-pin 90° Conn. with LED	B = 1.6 - 1.6	2 = Without man. override	E = Open exhaust (only NC types
3 = 3/2 NO	3 = 24 VAC 50/60 Hz	2 = Flying leads (300mm)	C = 1.6 - 1.1 NO	3 = Without M3 insert	
4 = 2/2 NO	6 = 110 VAC 50/60 Hz	3 = 2-pin 180° Conn. with LED	D = 0.8 - 1.1 NC	4 = With 2 pos. man. override	
	7 = 220 VAC 50/60 Hz	D = DIN 43650 Form C		5 = With push type man. override	
	8 = 24 VDC 1 watt (0.8 size only)				
	9 = 24 VDC + Earth ground				

Example: MR15-221-B4E = 15mm valve, 3/2 NC, 12 VDC, 2-pin 90° connector with LED, orifice diameter 1.6 - 1.6, with 2 position manual override, open exhaust

Notes: Items highlighted in grey are standard, contact Technical Support at the factory.
Scope of delivery includes mounting hardware.

Series DO15-MR Miniature Pneumatic Valves

Directional control, direct operated solenoid, 15mm body width

Part Number to Model Number Crossover for DO15-MR Valves

Model Code	Part No.	Type	Voltage	Connector	Manual Override	Figure
MR15-111-B4S	R432033324	2/2 NC	24 VDC	90 + LED	2 position (locking)	1
MR15-111-B5S	R432033306	2/2 NC	24 VDC	90 + LED	Push type	1
MR15-112-B4S	R432033323	2/2 NC	24 VDC	300 mm cable	2 position (locking)	2
MR15-112-B5S	R432033305	2/2 NC	24 VDC	300 mm cable	Push type	2
MR15-11D-B4S	R432033325	2/2 NC	24 VDC	DIN	2 position (locking)	3
MR15-11D-B5S	R432033307	2/2 NC	24 VDC	DIN	Push type	3
MR15-121-B4S	R432033321	2/2 NC	12 VDC	90 + LED	2 position (locking)	1
MR15-121-B5S	R432033303	2/2 NC	12 VDC	90 + LED	Push type	1
MR15-122-B4S	R432033320	2/2 NC	12 VDC	300 mm cable	2 position (locking)	2
MR15-122-B5S	R432033302	2/2 NC	12 VDC	300 mm cable	Push type	2
MR15-12D-B4S	R432033322	2/2 NC	12 VDC	DIN	2 position (locking)	3
MR15-12D-B5S	R432033304	2/2 NC	12 VDC	DIN	Push type	3
MR15-211-B4S	R432033330	3/2 NC	24 VDC	90 + LED	2 position (locking)	1
MR15-211-B5S	R432033312	3/2 NC	24 VDC	90 + LED	Push type	1
MR15-212-B4S	R432033329	3/2 NC	24 VDC	300 mm cable	2 position (locking)	2
MR15-212-B5S	R432033311	3/2 NC	24 VDC	300 mm cable	Push type	2
MR15-21D-B4S	R432033331	3/2 NC	24 VDC	DIN	2 position (locking)	3
MR15-21D-B5S	R432033313	3/2 NC	24 VDC	DIN	Push type	3
MR15-221-B4S	R432033327	3/2 NC	12 VDC	90 + LED	2 position (locking)	1
MR15-221-B5S	R432033309	3/2 NC	12 VDC	90 + LED	Push type	1
MR15-222-B4S	R432033326	3/2 NC	12 VDC	300 mm cable	2 position (locking)	2
MR15-222-B5S	R432033308	3/2 NC	12 VDC	300 mm cable	Push type	2
MR15-22D-B4S	R432033328	3/2 NC	12 VDC	DIN	2 position (locking)	3
MR15-22D-B5S	R432033310	3/2 NC	12 VDC	DIN	Push type	3
MR15-311-B4S	R432033336	3/2 NO	24 VDC	90 + LED	2 position (locking)	1
MR15-311-B5S	R432033318	3/2 NO	24 VDC	90 + LED	Push type	1
MR15-312-B4S	R432033335	3/2 NO	24 VDC	300 mm cable	2 position (locking)	2
MR15-312-B5S	R432033317	3/2 NO	24 VDC	300 mm cable	Push type	2
MR15-31D-B4S	R432033337	3/2 NO	24 VDC	DIN	2 position (locking)	3
MR15-31D-B5S	R432033319	3/2 NO	24 VDC	DIN	Push type	3
MR15-321-B4S	R432033333	3/2 NO	12 VDC	90 + LED	2 position (locking)	1
MR15-321-B5S	R432033315	3/2 NO	12 VDC	90 + LED	Push type	1
MR15-322-B4S	R432033332	3/2 NO	12 VDC	300 mm cable	2 position (locking)	2
MR15-322-B5S	R432033314	3/2 NO	12 VDC	300 mm cable	Push type	2
MR15-32D-B4S	R432033334	3/2 NO	12 VDC	DIN	2 position (locking)	3
MR15-32D-B5S	R4320333169	3/2 NO	12 VDC	DIN	Push type	3

Note: Scope of delivery includes mounting hardware.

Series DO15-MR Miniature Pneumatic Valves

Directional control, direct operated solenoid, 15mm body width

Figure 1: 2-pin 90° Connector

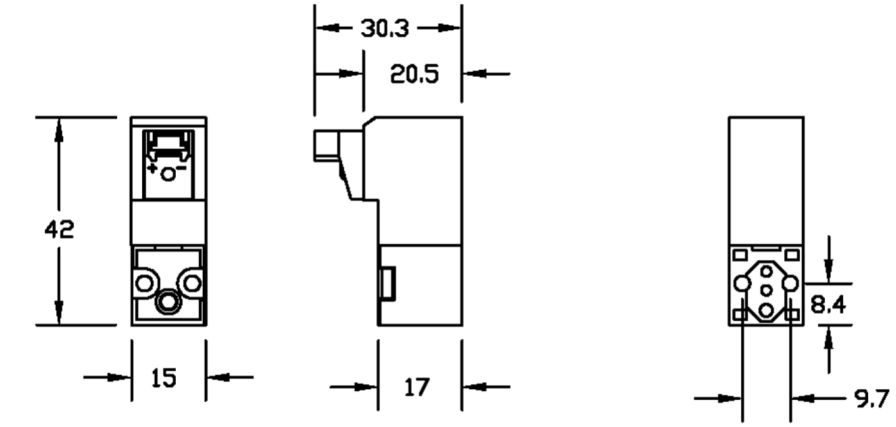

Figure 2: Flying leads (300 mm)

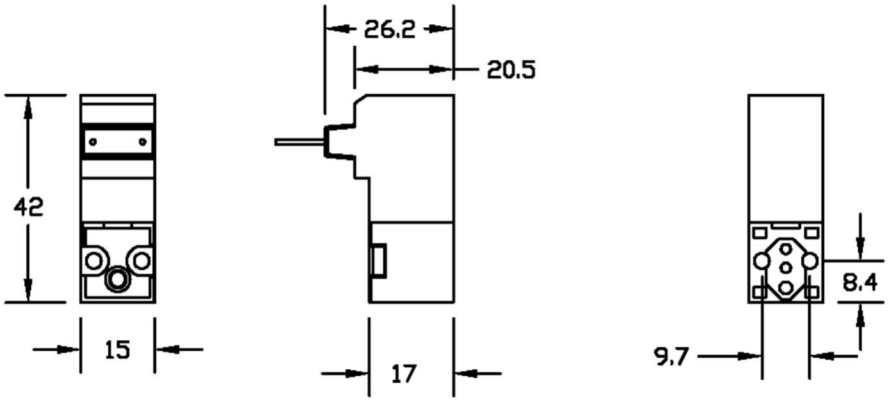

Figure 3: DIN Connector (Form C)

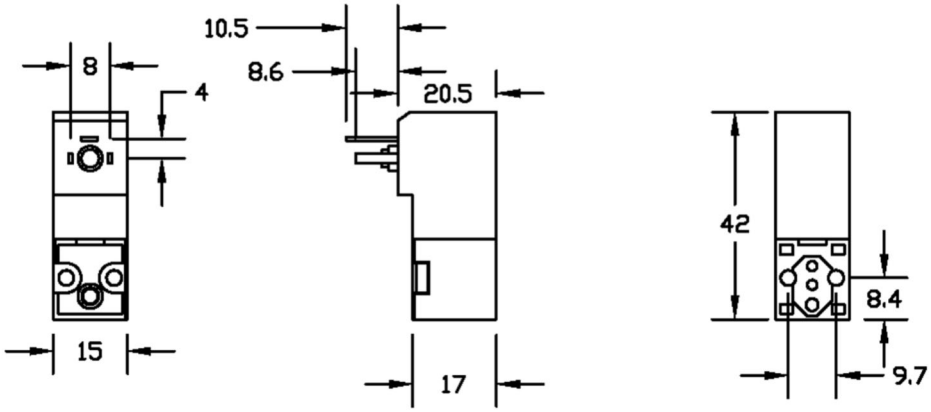

Series DO15-MR Miniature Pneumatic Valves

Directional control, direct operated solenoid, 15mm body width

Single subbase and manifold bases for DO15-MR valves

Part No.	No. of Stations	Supply & Exhaust Ports	Working Port	Y (in)	Z (in)
R432033359	1	#10-32 (M5) thread	#10-32 (M5) thread	--	--
R432037218	2	1/8” NPT	#10-32 (M5) thread	2.00	1.610
R432037219	3	1/8” NPT	#10-32 (M5) thread	2.63	2.240
R432037220	4	1/8” NPT	#10-32 (M5) thread	3.26	2.870
R432037221	5	1/8” NPT	#10-32 (M5) thread	3.89	3.500
R432037222	6	1/8” NPT	#10-32 (M5) thread	4.52	4.130
R432037223	8	1/8” NPT	#10-32 (M5) thread	5.78	5.390
R432037224	10	1/8” NPT	#10-32 (M5) thread	7.04	6.650
R432037225	12	1/8” NPT	#10-32 (M5) thread	8.30	7.910
R432037226	14	1/8” NPT	#10-32 (M5) thread	9.56	9.170
R432037227	16	1/8” NPT	#10-32 (M5) thread	10.82	10.430
R432033358	Blanking plate	--	--	--	--

Note: Additional versions available, contact Technical Support at the factory.

Single Subbase

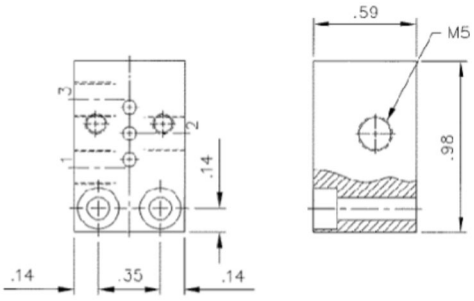

Manifold Bases

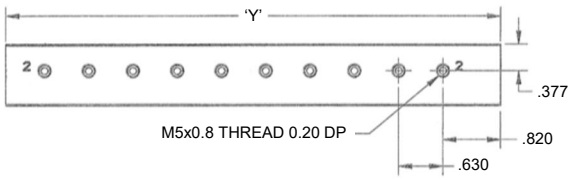

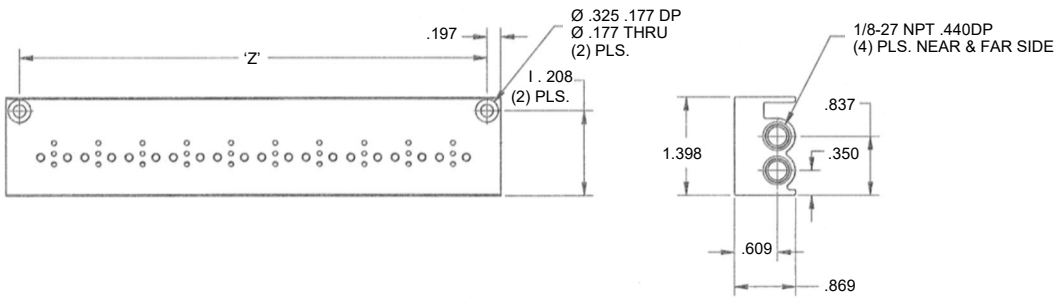

Series DO15-MR Miniature Pneumatic Valves

Directional control, direct operated solenoid, 15mm body width

Blanking plate for DO15-MR valves, Part no. R432033358



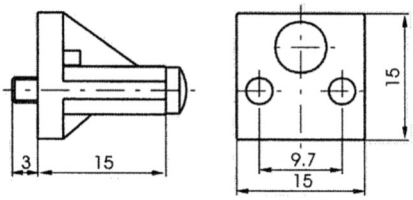

Connector Cables (for 2-pin connectors)



Part No.	Cable Length
R432033338	300mm
R432033339	600mm
R432033340	1 meter

Solenoid Connectors





Part No.	Type	Description
8941012202	DIN 43650 Form C	Non-lighted, without lead
R432011982	DIN 43650 Form C	LED, 24VDC, without lead
R432011962	DIN 43650 Form C	LED, 24VDC, 3’ lead
R432011964	DIN 43650 Form C	LED, 24VDC, 6’ lead
R432034286	AMP Faston	Non-lighted, without lead
R432034287	AMP Faston	LED, 24VDC, without lead
R432034288	AMP Faston	LED, 110VAC, without lead
R432034289	AMP Faston	LED, 220VAC, without lead

(DIN 43650 Form C connectors shown)

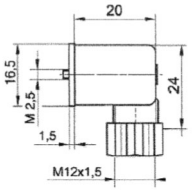

(Non-lighted)

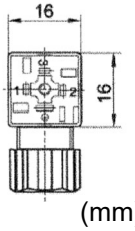

(mm)

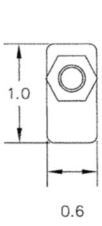

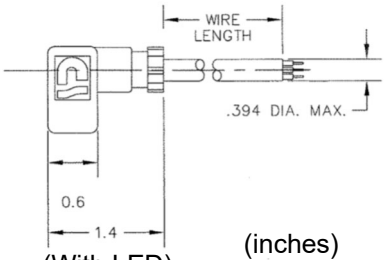

(With LED)

(inches)

Series 830 3-Way Directional Poppet Valve
Solenoid operated



NOTE: Valve mounting screws provided with subbases and manifolds are M3 x 18mm

TECHNICAL DATA:

NOTE: All dimensions expressed in $\frac{IN}{MM}$

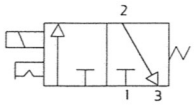

Port Sizes: 10-32 delivery ports with G 1/8 supply
Working Pressure: 0-150 psi
Flow: C_v = .06
(up to 3 SCFM w/ 150 psi pressure supply; up to 2.25 SCFM w/ 80 psi supply (15 psi pressure drop)
Temperature Range: +5°F to +122°F
Media: Air, either lubricated or non-lubricated
Materials: Rugged engineering plastic body with nylon coil, subbase and manifolds or black anodized aluminum.
Manual Override: Locking

ELECTRICAL DATA:
NEMA 4 (IP65) electrical protection

Standard Voltages (all coils rated for continuous duty)	Power Consumption	
	Inrush	Holding
24, 120 VAC (50/60 Hz)	8.5 VA	6.9 VA
6, 12, 24 VDC	4.8 W	

Voltage tolerance: ±10%

FEATURES
- Direct acting, poppet design
- 3-way normally closed, single solenoid
- Manifold capabilities, 2 thru 8 stations
- Operates with lubricated or nonlubricated air

Valve Dimensions

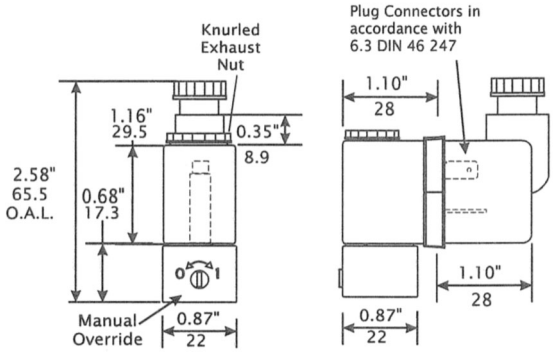

dimensions = $\frac{IN}{mm}$

Subbase Dimensions

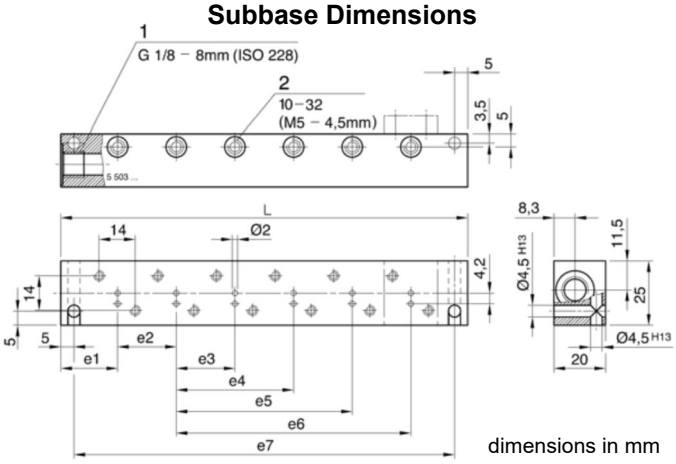

dimensions in mm

Valves with non-lighted connector

Voltage	Part No.
120 VAC-50/60 Hz	R432006547
240 VAC-50/60 Hz	R432006549
12 VDC	R432006552
24 VDC	R432006555
24 VAC-50/60 Hz	R432006557

Valves with lighted connector

Voltage	Part No.
120 VAC-50/60 Hz	R432006548
240 VAC-50/60 Hz	R432006550
12 VDC	R432006553
24 VDC	R432006556
24 VAC-50/60 Hz	R432030351

Replacement Coils

Voltage	Part No.
120 VAC-50/60 Hz	R432006534
240 VAC-50/60 Hz	R432030356
12 VDC	R432006535
24 VDC	R432006536
24 VAC/ 50/60Hz	R432006537

Number of Valve Positions	Part No.	e1	e2	e3	e4	e5	e6	e7	L
Single station	R432038820	22	–	–	–	–	–	34	44
2-station	R432038821	22	23	–	–	–	–	57	67
3-station	R432038822	22	23	46	–	–	–	80	90
4-station	R432038823	22	23	46	69	–	–	103	113
5-station	R432038824	22	23	46	69	92	–	126	136
6-station	R432038825	22	23	46	69	92	115	149	159

Series 840 Valves, 4-Way Directional Control
Solenoid and air pilot, for 1/4” tubing

4 Way / 2 Position
Solenoid & Air Pilot Poppet Valves

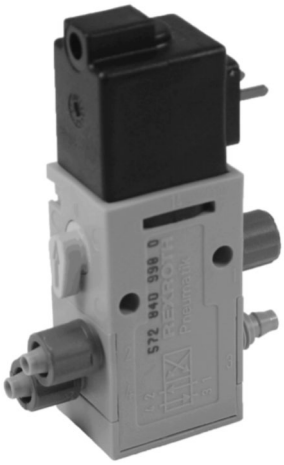

TECHNICAL DATA:
Port Sizes: Integrated Fittings: 1/4” O.D. x .040” wall poly tubing (gray tube nuts)

Flow: Cv = .20

Working Pressure: 20 psi minimum (External pilots not available)
150 psi maximum (Below 105°F) - solenoid & air pilot valves
115 psi maximum (105°F - 122°F) - solenoid valves
115 psi maximum (105°F - 140°F) - air pilot valves
No vacuum service

Temperature Ranges: +5° to +122°F (20-115 psi) - solenoid valves
+5° to +140°F (20-150 psi) - air pilot valves
+5° to 105°F (20-150 psi) - solenoid & air pilot valves

Media: Air (either lubricated or non-lubricated)

Materials: Polyacetal Engineering Plastic with polyurethane seals and diaphragm

Weight: 2.6 oz. (single solenoid)

Manual Override: Locking

ELECTRICAL DATA:

Standard Voltages (all coils rated for continuous duty)	Power Consumption	
	Inrush	Holding
24, 120 VAC (50/60 Hz)	2.9 VA	2.0 VA
12, 24 VDC	1.6 W	

Voltage Tolerance: ±10%
NEMA 4 ELECTRICAL PROTECTION
NOTE: Solenoid connectors must be ordered separately, one per solenoid. See complete listing on the Solenoid Connectors page.

OPTIONS: Wireways - (see following pages)

Solenoids with indicators lights available-contact AVENTICS

MANIFOLD MOUNTING

(Simple field assembly, or factory assembled manifold are available.)



FEATURES

- 4 way/4 ported directional control valve
- Compact and lightweight (only 2.6 oz. and requires less than 3 cubic inches of space).
- Designed to operate on non-lubricated air.
- Integral fitting (for 1/4” plastic tubing) for fast, leak free connections.
- Modular wireway system
- NEMA 4 Electrical Protection (valve only)
- UL Recognized
- “Clip type” valve to manifold mounting means valve installation and removal takes only seconds (similar to Type 740™ concept).
- Polyacetal Engineering Plastic construction provides excellent corrosion resistance.
- Poppet type valve design provides millions of trouble free cycles.
- Manual override standard.
- Twist lock coil design (no tools required) permits convenient interchangeability between AC and DC coils
- 3 snap together modular manifold sections facilitate most manifold requirements (accommodates 3/8” O.D. tubing for both supply and exhaust).
- Cycle life - 20-100 million cycles
- Response time:
  Supply pressure 90 psi
  Energized-(0-81psi): 16ms
  De-energized-(90-9 psi): 18ms
  Response time based on 24 VDC Single Solenoid

Series 840 Valves, 4-Way Directional Control
Solenoid and air pilot, for 1/4” tubing

4 Way / 2 Position Poppet Valves
Single & Double Solenoid, Single & Double Air Pilot

NOTE: All dimensions expressed in IN/MM

NOTE: Valves on this page are not supplied with connectors. Connectors must be ordered separately. See bottom of this page and Solenoid Connectors page.

NEW PART NO.	OLD PART NO.	DESCRIPTION
5728409990	P -026641-00001	Sgl. Sol. 120 VAC/50-60 Hz
R432008661	P -026641-00002	Single Sol. 220/230 VAC
R432008662	P -026641-00004	Single Solenoid 12 VDC
5728409980	P -026641-00005	Single. Solenoid 24 VDC
R432008663	P -026641-00006	Sgl. Sol. 24 VAC/50-60 Hz
R432008664	P -026642-00001	Dbl. Sol. 120 VAC/50-60 Hz
R432008665	P -026642-00004	Double Solenoid 12 VDC
R432008666	P -026642-00005	Double Solenoid 24 VDC
R432030358	P -026642-00006	Dbl. Sol. 24 VAC/50-60 Hz
R432008659	P -026639-00000	Single Air Pilot

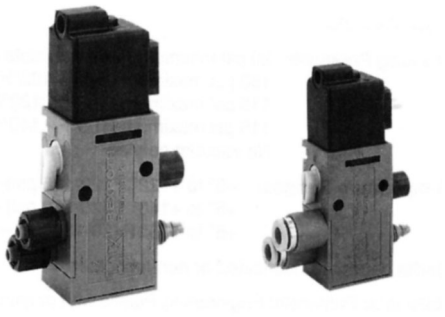

Typical width of valve:
0.87” (22.5mm)
Push-in fittings for metric tubing available. See online catalog.

Wireways, Connectors and Manifolds

Wireway System

Technical Data:
Nominal Voltage: Max. 125V
Continuous Current: 3.2A
Ambient Temperature: +5°F to +175°F
Protection: NEMA 1
Material: Blade and fork contact: nickel plated steel
Spring terminal: stainless steel
Note: Connectors are not required for each individual valve when using wireway R432008679, only one (1) connector per complete manifold is needed.

Manifold System (factory assembled also available)

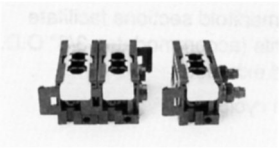

Manifold accommodates 3/8” O.D. tubing.

Part Number	Description
*R432008411	Inlet segment
*R432008412	End segment
*R432008413	Station segment
* For a single valve subbase, order Part Number R432008744	

Ordering Example:
(4 station manifold)

1 inlet segment
1 end segment
2 station segments

* Includes all o-rings required.

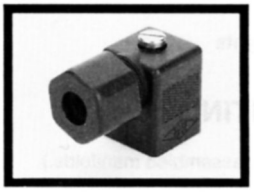

8941012202
SERIES 840 VALVE CONNECTOR
(See page 89 for lighted connectors)

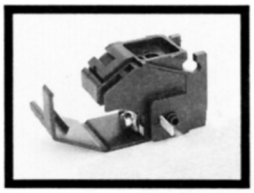

R432008679
WIREWAY SEGMENT

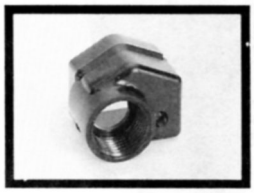

R432008830
1/2” CONDUIT CONNECTOR KIT

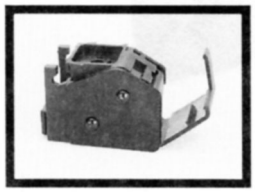

R432008829
WIREWAY END CAP

Series 840 Valves, 4-Way Directional Control
Solenoid and air pilot, for 1/4 tubing

DIMENSIONS

SGL AIR PILOT



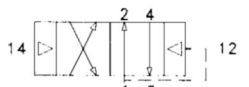

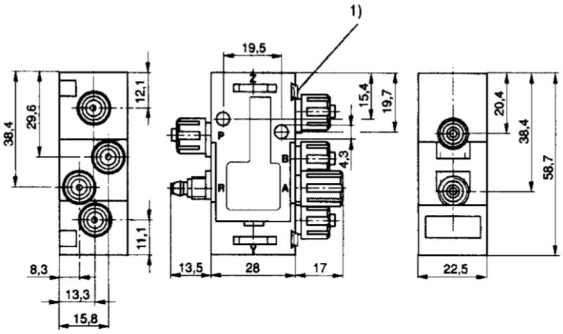

1.) Mounting space for nameplate.

SGL SOLENOID



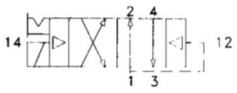

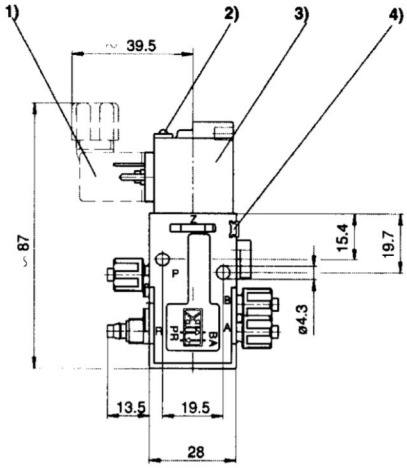

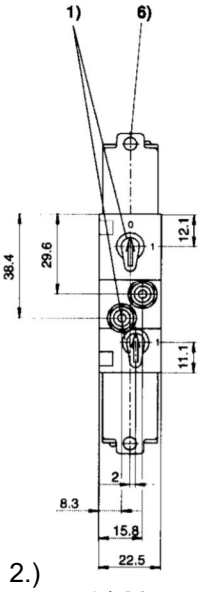

1.) Connector rotates at 90° intervals. 2.) LED indicator. 3.) Coil rotates at 90° intervals. 4.) Mounting space for nameplate.

DBL SOLENOID

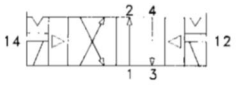



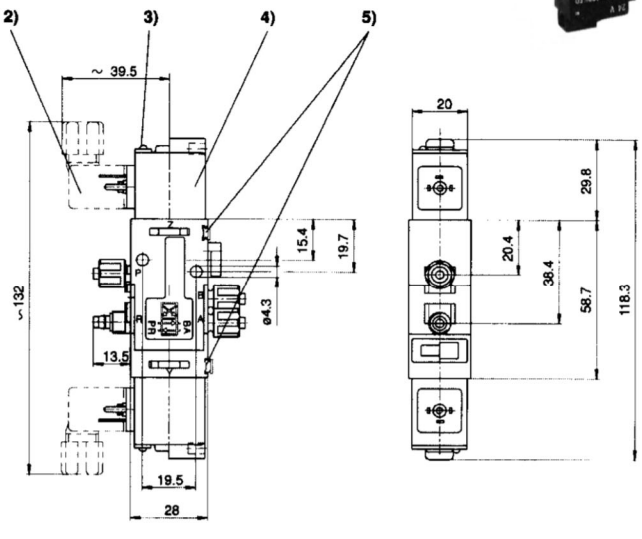

1.) Manual overrides. 2.) Connector rotates at 90° intervals. 3.) LED indicator. 4.) Coil rotates at 90° intervals. 5.) Mounting spaces for nameplate. 6.) Hole for M5 fitting or silencer (Ø 4.5mm).

Series 840 Valves, 4-Way Directional Control

System drawing and wireway electrical information

Total System Drawing

NOTE: Optional supply ports are available by drilling and tapping a #10-32 thread into the bottom or side of the manifold.

"O" rings (provided with each manifold segment) should be lubricated before installation. Valve to manifold "O" ring - Part no. 8970724744
Manifold to manifold "O" ring - Part no. 8970862504

Subbases can be mounted with DIN rail (en 50 022) or with #8 screws. First, last, and every fourth station should be secured if DIN rail mounting is not used.

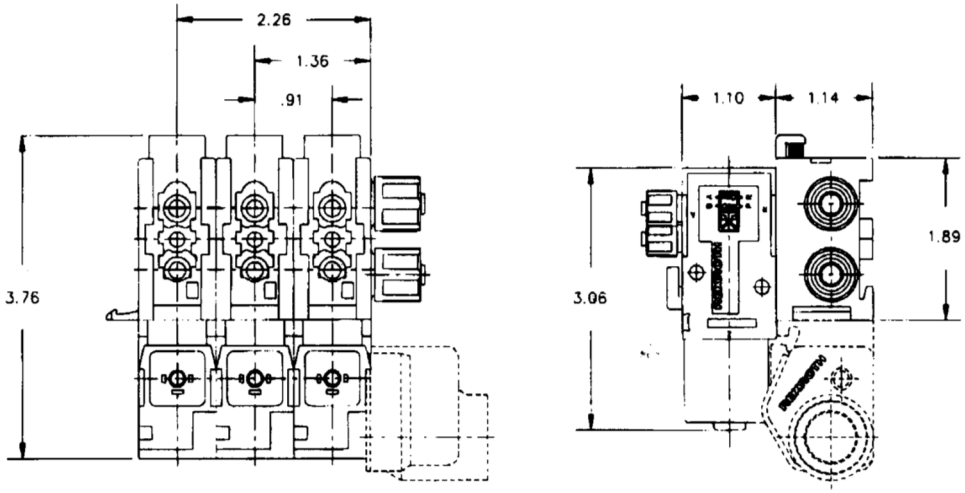

Wireway Electrical Connection

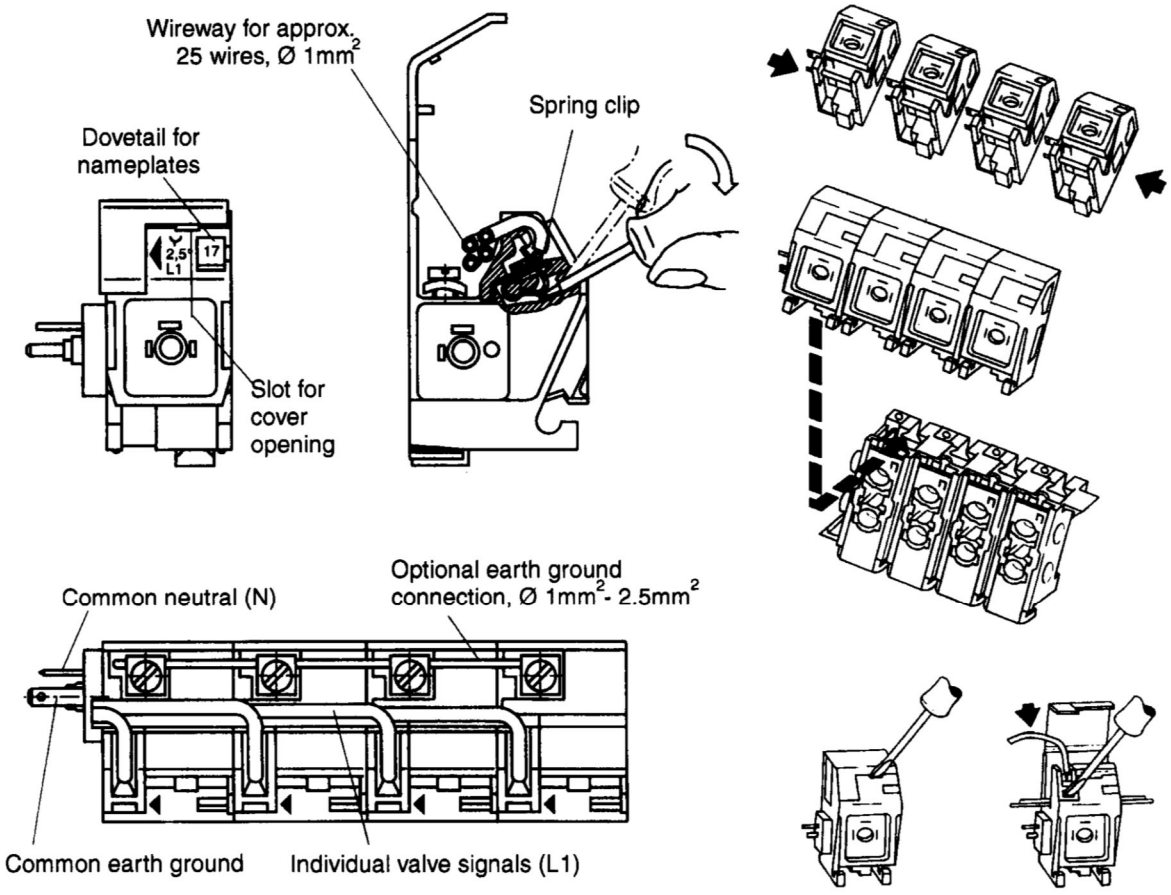

Series 840 Valves, 4-Way Directional Control
Accessories and repair parts

Accessories & Repair Parts
4 Way / 2 Position Poppet Valves

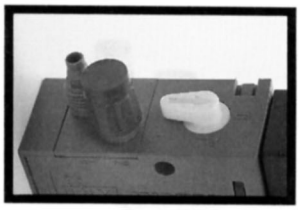

Blanking Cap
8930715002

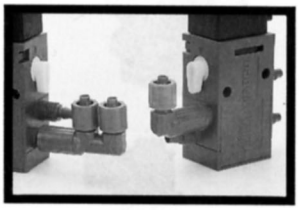

Single Elbow
R432008328

Double Elbow
R432008416



Valve Exhaust Silencer
5324002000

Manifold Exhaust Silencer
5324002020

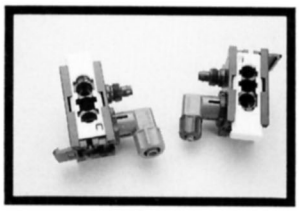

1/4” Manifold Elbow
R432015479

3/8” Manifold Elbow
R432015301

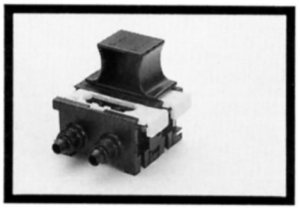

Manifold Blanking Plate
R432008420

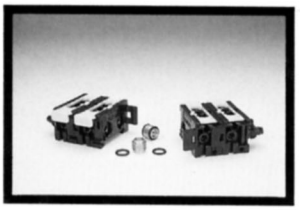

Dual Pressure Manifold Kit
5728400092

Exhaust Silencer for Pilot
8993800114



Exhaust Fitting Kit
R432015679

ACCESSORIES

PART NUMBER	DESCRIPTION
8930715002	Blanking Cap (for either delivery port)
R432008328	Elbow Fitting (1/4” for valve)
R432008416	Double Elbow Fitting (1/4” for valve)
5324002000	Exhaust Silencer (for valve)
5324002020	Exhaust Silencer (for manifold)
R432015479	Elbow Fitting (1/4” for manifold)
R432015301	Elbow Fitting (3/8” for manifold)
R432008420	Manifold Blanking Plate Kit
5728400092	Dual Pressure Manifold Kit
R432008514	Tube Nut Kit (2 pcs.) for manifold 3/8”
R432015689	Tube Nut Kit (2 pcs.) for valve 1/4”
8930714804	Tube nut, black. For 6 mm x 1 mm wall Poly tubing
8993800114	Exhaust Muffler (Silencer for pilot)
R432015679	Exhaust Fitting Kit (2 pcs.)

MANIFOLDS

PART NUMBER	DESCRIPTION
R432008411	Inlet Segment
R432008412	End Segment
R432008413	Station Segment
R432008744	Single Subbase (used to manifold mount a single valve.)

DIN RAIL MOUNTING BARS

PART NUMBER	DESCRIPTION
R432008414	DIN Rail Mounting Bar (6”)
R432008415	DIN Rail Mounting Bar (12”)

Complete manifold assemblies snap or slide onto DIN rail.
Consult factory for longer lengths of DIN rail.

“SNAP” COILS
(Includes coil, armature, & plunger)

PART NUMBER	DESCRIPTION
5420935270	120 VAC/50-60 Hz
5420930210	12 VDC
5420930220	24 VDC
5420935220	24 VAC/50-60 Hz
5428405480	220/230 VAC

Series 740 Valves
Specifications and features

4 Way / 2 & 3 Position Solenoid & Air Pilot Operated Diaphragm-Poppet Valve

TECHNICAL DATA:

Port Sizes:
Integrated Fittings for 3/8", 5/16", and 8mm tubing
Push-in fitting styles bodies available for metric tubing only
(2 position only)

Working Pressure:
20 PSI minimum
150 PSI maximum
External Pilots not available

Flow: C_v=0.7 - with Integrated Fittings
(C_v=1.3 - comparable flow to threaded port valve)



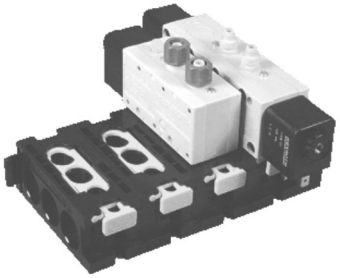

ELECTRICAL DATA:

Standard Voltage (all coils are rated for continuous duty)	Power Consumption	
	Inrush	Holding
24 VAC-50/60 Hz, 110V-50 Hz/120V-60 Hz 220V-50 Hz/240V	6.4 VA	3.7 VA
6, 12, 24 VDC	2.7 W	

Voltage Tolerance: ±10% (Except for Explosion proof and Intrinsically safe solenoids.)
NOTE: Electrical connectors must be ordered separately. One per solenoid required. See complete listing on Solenoid Connectors page.

Recommended Tubing:

Standard 3/8" O.D> x 0.062" wall - poly tubing
*5/16" O.D. x 0.040 wall - nylon tubing
*8mm x 1.00mm wall poly tubing
*Requires optional tube nut kit (R432015289)
Valves designed for 10mm O.D. x 1mm wall poly tubing are also available.
Adapters available: 1/4" O.D. x 0.040 wall - poly tubing.
Tube nuts are supplied with each valve for 3/8" x 0.062 wall poly tubing

Features:

- NEMA 4 Electrical protection
- cURus (Dual CSA/UL Recognized) coil versions available
- Packaged as a cylinder/valve combination with TaskMaster® cylinders sizes 1 1/2" thru 4". See catalog SC-200.
- Integrated fittings
- Adjustable built-in flow controls in R and S exhausts on two position valves
- Cycle life: 20 to 150 million cycles
- Response time for 24VDC single solenoid valve:
  (at supply pressure 85 psi)
  On (0-77 psi) 18ms or less
  Off (85-8 psi) 32 ms or less

Series 740 Valves
Single and double solenoid, 5/2

4 Way / 2 Position
Solenoid Operated Diaphragm Poppet Valve

NOTE: All dimensions expressed in IN / MM

NOTE: Electrical connector must be ordered separately. One per solenoid required, see Solenoid Connectors page. All valves on this page come with 3/8" tube nuts designed to accommodate 3/8" x 0.062" wall poly tubing. Valves with tube nuts for 5/16" (8mm) tubing, 10mm tubing, and push-in fitting style bodies available.

SINGLE SOLENOID WITH AIR SPRING RETURN

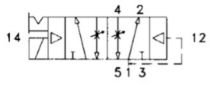

NEW PART NO.	OLD PART NO.	VOLTAGE
5727495270	PW-067697-00001	110 VAC 50Hz/120 VAC 60Hz
R432016655	PW-067697-00002	220 VAC 50Hz/240 VAC 60Hz
R432016656	PW-067697-00003	6 VDC
R432016657	PW-067697-00004	12 VDC
5727490220	PW-067697-00005	24 VDC
R432016658	PW-067697-00006	24 VAC 50/60 Hz
R432002436		without coil

Unique Manual Override Feature: Single solenoid valves are equipped with a convertible manual override button. Valve comes standard with *extended locking* override. By snipping tab off of plastic button, override becomes *non-locking* extended. By snipping button at first scored line, it becomes a *flush non-locking* override. By snipping at second scored line, a *flush locking* override is obtained, requiring a screwdriver to actuate.

DOUBLE SOLENOID OPERATED

The external non-locking manual override button may be pushed from one side to the other to select which delivery port is pressurized initially.

2 POSITIONS

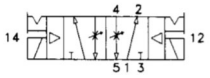

NEW PART NO.	OLD PART NO.	VOLTAGE
R432016659	PW-067715-00001	110 VAC 50Hz/120 VAC 60Hz
R432016660	PW-067715-00002	220 VAC 50Hz/240 VAC 60Hz
R432016661	PW-067715-00003	6 VDC
R432016662	PW-067715-00004	12 VDC
R432016663	PW-067715-00005	24 VDC
R432016664	PW-067715-00006	24 VAC 50/60 Hz
R432002437		without coil

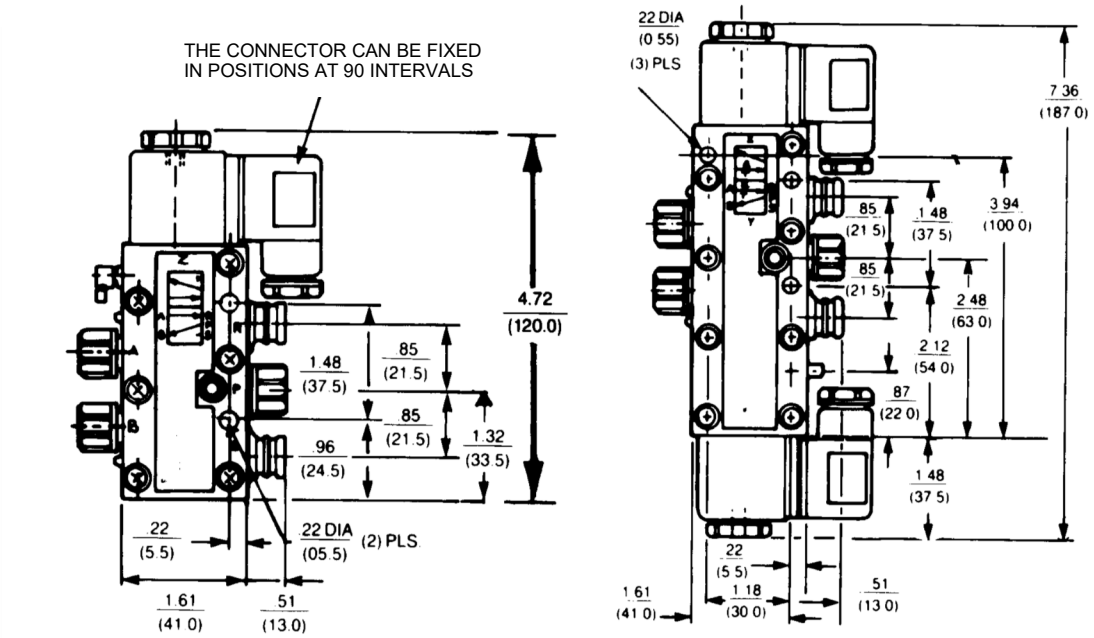

Typical width of valve: 1.38" (35.0mm)

See next page for U.L. recognized and CSA approved coils.

Series 740 Valves

Double solenoid 5/3 and U.L. recognized/CSA approved models

4 Way / 3 Position, Double Solenoid Operated Diaphragm-Poppet Valve

NOTE: Electrical connector must be ordered separately. One per solenoid required, see Solenoid Connectors page.
All valves on this page come with 3/8" tube nuts designed to accommodate 3/8" x 0.062" wall poly tubing.

NEW PART NO.	OLD PART NO.	DESCRIPTION	SYMBOL
CLOSED CENTER VERSION			
R432016670	PW-067717-00001	110 VAC 50 Hz/120 VAC 60 Hz	
R432016671	PW-067717-00002	220 VAC 50 Hz/240 VAC 60 Hz	
R432016672	PW-067717-00003	6 VDC	
R432016673	PW-067717-00004	12 VDC	
R432016674	PW-067717-00005	24 VDC	
R432016675	PW-067717-00006	24 VAC 50/60 Hz	
R432002438		without coil	
EXHAUST OPEN CENTER VERSION			
R432016665	PW-067716-00001	110 VAC 50 Hz/120VAC 60 Hz	
R432016666	PW-067716-00002	220 VAC 50 Hz/240 VAC 60 Hz	
R432016667	PW-067716-00004	12 VDC	
R432016668	PW-067716-00005	24 VDC	
R432016669	PW-067716-00006	24 VAC 50/60 Hz	
R432002439		without coil	

Warning: Do not energize both solenoids at same time or all ports may be pressurized or exhausted.

---

4 Way / 2 Position, Solenoid Operated Valves With cURus Approved Operators

PART NO.	DESCRIPTION
R432038437	5/2 Single Solenoid, w/ 24VDC
R432038419	5/2 Single Solenoid, w/ 110VAC 50/60Hz
R432038438	5/2 Double Solenoid, w/ 24VDC
R432038420	5/2 Double Solenoid, w/ 110VAC 50/60Hz
R432038439	5/3 Closed Center, w/ 24VDC
R432038421	5/3 Closed Center, w/ 110VAC 50/60Hz
R432038440	5/3 Open Center, w/ 24VDC
R432038422	5/3 Open Center, w/ 110VAC 50/60Hz

These valves do not include solenoid connectors. Order one per solenoid. See complete listing on Solenoid Connectors page.

Dimensions are the same as our standard models.

Series 740 Valves
Intrinsically safe solenoid valves, 5/2

4 Way 2 Position Intrinsically Safe Solenoid Valve for Hazardous Locations

Notice: Part number R432008894 has been discontinued.

Series 740 Valves
Solenoid valves 5/2 with larger integrated fittings

4 Way / 2 Position Solenoid Operated

Standard Series 740 valve with tube nuts for 5/16” (0.040 wall) nylon tubing or 8mm (1mm wall) poly tubing.
Push-in fittings are for 10mm (1mm wall) poly tubing.
NOTE: Electrical connectors must be ordered separately. One per solenoid required, see Solenoid Connectors page.

2 Position, Standard fittings

Single Solenoid

NEW PART NO.	OLD PART NO.	DESCRIPTION
R432016647	PW-027860-00001	110 VAC 50 Hz/120VAC 60 Hz Single Solenoid
R432016648	PW-027860-00002	220 VAC 50 Hz/240VAC 60 Hz Single Solenoid
R432016649	PW-027860-00005	24 VDC Single Solenoid
R432016650	PW-027860-00006	24 VAC 50/60 Hz Single Solenoid

Double Solenoid

NEW PART NO.	OLD PART NO.	DESCRIPTION
R432016651	PW-027897-00001	110 VAC 50 Hz/120VAC 60 Hz Double Solenoid
R432016652	PW-027897-00002	220 VAC 50 Hz/240VAC 60 Hz Double Solenoid
R432030385	PW-027897-00004	12 VDC Double Solenoid
R432016653	PW-027897-00005	24 VDC Double Solenoid
R432016654	PW-028797-00006	24 VAC 505/60 Hz Double Solenoid

2 Position, Push-in fittings (10mm O.D. tubing)

Single Solenoid

NEW PART NO.	OLD PART NO.	DESCRIPTION
5727475280	572-747-528-0	220 VAC 50 Hz/240vac 60 Hz Single Solenoid
5727470220	572-747-022-0	24 VDC Single Solenoid
5727475302	572-747-530-2	Base Valve - No Solenoid*

Double Solenoid

NEW PART NO.	OLD PART NO.	DESCRIPTION
5727485280	572-748-528-0	220 VAC 50 Hz/240vac 60 Hz Double Solenoid
5727480220	572-748-022-0	24 VDC Double Solenoid
5727485302	572-748-530-2	Base Valve - No Solenoid*

* Base valves are supplied without coil(s) or connector(s) which must be ordered separately (see later page)

Series 740 Valve with 10mm Supply and Delivery Ports for higher flow applications - 2 Position

Note: Use with 10mm O.D. x 1mm wall poly tubing

NEW PART NO.	OLD PART NO.	DESCRIPTION
R432015405	P -068700-K0000	Single Solenoid
R432015410	P -068704-K0000	Double Solenoid

10mm Valves are supplied without coil(s) or connector(s) which must be ordered separately (see later pages).

Series 740 Valves
Corrosion Resistant version

4 Way / 2 and 3 Position Solenoid Operated Corrosion Resistant Series 740 Valves

All fasteners and exposed metallic parts for the 2-position valves are 300 series stainless steel. The adjustable built-in flow control adjustment screws for the 3-position valves are zinc plated carbon steel, with all other fasteners and exposed metallic parts 300 series stainless steel. These valves are recommended for most daily wash-down applications such as food processing, breweries and dairy plants, or anywhere else that corrosion can be a problem. Dimensions are the same as standard valves.

CORROSION RESISTANT MODELS

2-POSITION VALVES Without Indicator Lights

New Part Number	Old Part Number	Description
R432015590	P -069294-00001	110VAC-50Hz/120VAC-60Hz Single Sol.
R432015591	P -069294-00002	220VAC-50Hz/240VAC-60Hz Single Sol.
R432015592	P -069294-00004	12 VDC Single Solenoid
R432015593	P -069294-00005	24 VDC Single Solenoid
R432015594	P -069294-00006	24 VAC-50/60Hz Single Solenoid
R432015597	P -069297-00001	110VAC-50Hz/120VAC-60Hz Double Sol.
R432015598	P -069297-00002	220VAC-50Hz/240VAC-60Hz Double Sol.
R432015599	P -069297-00005	24 VDC Double Solenoid

2-POSITION VALVES With Indicator Lights

New Part Number	Old Part Number	Description
R432015613	P -069344-00001	110VAC-50Hz/120VAC-60Hz Single Sol.
R432015614	P -069344-00004	12 VDC Single Solenoid
R432015615	P -069344-00005	24 VDC Single Solenoid
R432015616	P -069344-00006	24 VAC-50/60Hz Single Solenoid
R432015617	P -069345-00001	110VAC-50Hz/120VAC-60Hz Double Sol.
R432015618	P -069345-00002	220V-50Hz/240V-60Hz Double Solenoid
R432015619	P -069345-00005	24 VDC Double Solenoid

3-POSITION VALVES Without Indicator Lights

New Part Number	Old Part Number	Description
R432008644	P -026564-00001	110VAC-50Hz/120VAC-60Hz Closed Ctr.
R432008645	P -026564-00005	24 VDC Closed Center
R432008862	P -027873-00001	110VAC-50Hz/120VAC-60Hz Open Center
R432008863	P -027873-00005	24 VDC Exhaust Open Center

Series 740 Valves
Air pilot, single and double

4 Way / 2 Position
Air Pilot Operated

NOTE: All dimensions expressed in $\frac{IN}{MM}$

SINGLE AIR PILOT VALVES

Part No. R432013808
(old P - 067698-00000)

DOUBLE AIR PILOT VALVES

Part No. R432013810
(old P - 067700-00000)

Typical width of valve: 1.38” (35.0mm)

FOR DOUBLE AIR PILOT

Manual override standard. This unique, external non-locking manual override button for the double air pilot may be pushed from one side to the other to select which delivery port is pressurized.

Double Air Bleeder Valve:
Part No. R432008442 (old P - 026125-00000

OPERATION

Exhausting either air pilot port while the opposite port is still pressurized will shift the valve. Valve features stainless steel fasteners for corrosion resistance.

Series 740 Valves
Manifolds and gang stacking

4 Way / 2 and 3 Position
Manifold Mounts & Gang Stacking

NOTE: All dimensions expressed in $\frac{IN}{MM}$

Manifold Mounting, Snap-Together Assembly
(Factory assembled manifolds also available)

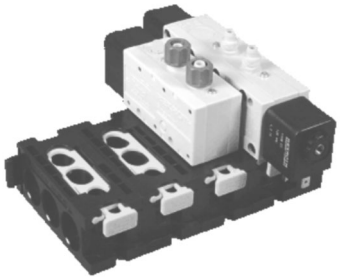

Gang Stacking Arrangement

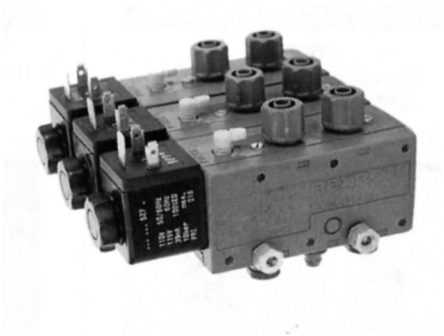

NEW PART NO.	OLD PART NO.	DESCRIPTION
R432013811	*P -067701-00000	Inlet Segment
R432013812	*P -067702-00000	End Segment
R432013813	*P -067703-00000	Station Segment
R432015880	*P -069881-00000	Single Subbase (Identical to inlet segment except rear cavities are blocked. Used to manifold mount one valve only.

* Required O-rings included

ORDERING EXAMPLE
(4 Station Manifold):
1 - Inlet segment
1 - End segment
2 - Station segment

Part No. R432013853 O-Ring Kit (included with manifold segments)

SHEAR PLUG KNOCKOUT
Ganged assembly-common supply pressure obtainable by knockout shear plugs

Mounting Accessories Kit Part Number R432013852 Includes O-ring (for sealing between the valve bodies) and an inlet port blanking cap. (Bolts and Nuts are not included).

Stack can be held together and mounted with readily available 1/8" 'all thread" material.

MANIFOLD INSTALLATION NOTE:
The first and last segment should always be securely mounted to a plate. If more than five valves are used, every third valve segment should also be securely mounted.

MANIFOLDS - OUTLINE DIMENSIONS

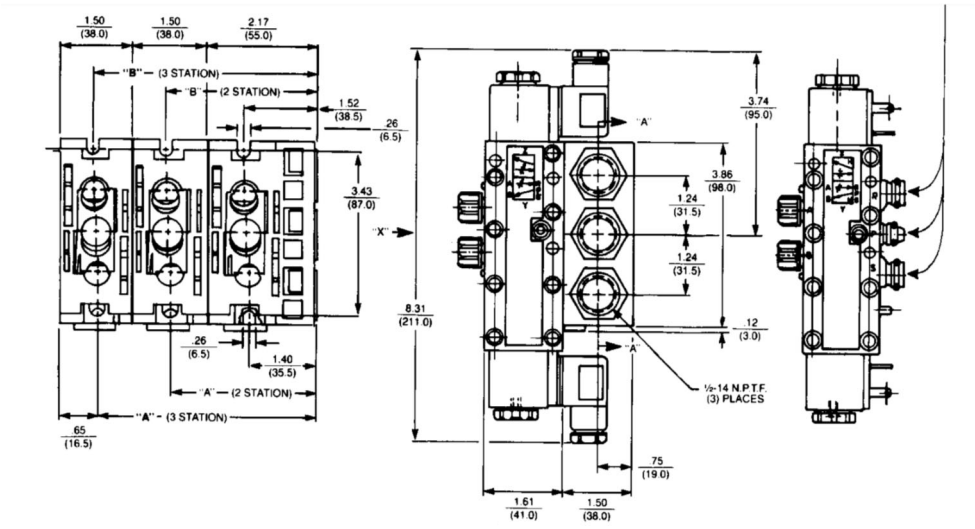

Part no. R432030413 O-Ring Kit (included with segments)
Lubricate O-Rings with Dow Corning 55 before assembly

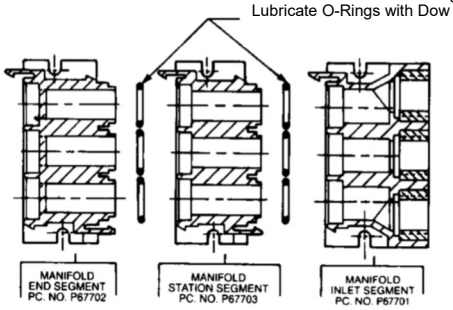

NOTE: Yellow lock tab on manifold segments are scored. This allows the end to be broken off (if desired), making it tamper resistant, thus requiring a screwdriver to remove valve.

No of Stations	A	B
2	2.89	3.01
	(73.5)	(76.5)
3	4.39	4.51
	(111.5)	(114.5)
4	5.89	6.00
	(149.5)	(152.5)
5	7.38	7.50
	(187.5)	(190.5)
6	8.88	9.00
	(225.5)	(228.5)
7	10.37	10.49
	(263.5)	(266.5)
8	11.87	11.99
	(301.5)	(304.5)
9	13.37	13.48
	(339.5)	(342.5)
10	14.86	14.98
	(377.5)	(380.5)

Series 740 Valves
Accessories

ACCESSORIES

R432015301
Elbow Fitting with nuts for 3/8" & 5/16" O.D. tubing

R432015479
Reducer Elbow Fitting with nut for 1/4" O.D. (.040" wall) tubing

R432015475
Reducer Fitting with nut For 1/4" O.D. tubing

R432013850
Exhaust Tube Nut & Silencer (2 kits shown)

8919905502 (3/8", 5/16" or 8 mm)
8919905512 (10 mm)
Blanking Cap (converts 4-way to 3-way)

R432013852
Sheer Plug Knockout for Stacking

R432015513
Exhaust Fitting Adapter Kit (converts the standard exhaust fitting to a tube fitting for external piping)

R432015289
Tube Nuts (3 ea.) for 5/16" (.040" wall) O.D. nylon tubing or 8mm (1mm wall) O.D. poly tubing

R432015287
Tube Nuts (3 ea.) for 3/8" O.D. (.062" wall) poly tubing

R432015511
Manifold Blanking Plate (use to block one segment)

R432015330
Manifold Bushing Kit for two supply pressures

R432015512
Individual Manifold Supply Pressure Kit-mounts underneath manifold segment (not included)

R432015527
Double Elbow Fitting for 1/4" O.D. tubing

R432015526
Double Elbow Fitting for 3/8" & 5/16" O.D. tubing

R432015525
Barb Fitting for 1/4" I.D. Reinforced Hose

Series 740 Valves
Repair Kits

Repair Kits and Parts

Part No.	Old Part No.	Description
R432013884	P -067916-00000	Single Solenoid Body Repair Kit
R432013885	P -067917-00000	Double Solenoid Body Repair Kit (includes 3 position valves also)
R432013854	P -067817-00000	Air Pilot Operator Kit
R432013816	P -067705-K0000	Single Solenoid Body Assembly
R432013814	P -067704-K0000	Double Solenoid Body Assembly
R432015687	P -069541-00000	Solenoid Repair Kit, includes armature, plunger/spring & seal
8994702802	H -899470-02802	Solenoid Retainer Kit
R432013839	P -067782-00000	Valve Latch & Spring
R432013853	P -067816-00000	Valve Manifold Station "O" Ring Kit, (to attach valve to manifold)

Solenoid Kits
(Includes Armature, Coil, & Mtg. Hardware)

Part No.	Old Part No.	Description
R432015349	P -068648-00000	24 VAC-50/60Hz
R432013840	P -067783-00000	110VAC-50Hz/120VAC-60Hz
R432013841	P -067784-00000	220VAC-50Hz/240VAC-60Hz
R432029180	P -067785-00000	6 VDC
R432013842	P -067786-00000	12 VDC
R432013843	P -067787-00000	24 VDC

cURus Approved Coils

Part No.	Description
R432038426	24 VDC
R432038392	110 VAC-50/60Hz

Standard Coils

Part No.	Model Number	Description
R432011985	P -048835-00001	110VAC-50Hz/120VAC-60Hz
R432011986	P -048835-00002	220VAC-50Hz/240VAC-60Hz
R432011988	P -048835-00004	12 VDC
R432011989	P -048835-00005	24 VDC
R432011990	P -048835-00006	24 VAC-50/60Hz

Coils for Corrosion Resistant Valves

Part No.	Model Number	Description
5428457072	H -542845-07072	110VAC-50Hz/120VAC-60Hz
5428457082	H -542845-07082	220VAC-50Hz/240VAC-60Hz
5420507012	H -542050-07012	12 VDC
5420507022	H -542050-07022	24 VDC
5428457022	H -542845-07022	24 VAC-50/60Hz

Series AP Valves
3/2, mechanical actuation, M5 (10-32)

Technical Data



Technical information
Elastic seals, valve function non-overlapping
Mounting via 2 threads in the body or in control panel
Exhaust via actuation, not vented

Version	Poppet valve
Working pressure min./max.	0 bar / 10 bar
Ambient temperature min./max.	-30°C / +80°C (-22°F to +176°F)
Medium temperature min./max.	-30°C / +80°C (-22°F to +176°F)
Medium	Compressed air
Max. particle size	5 µm
Oil content of compressed air	0 mg/m³ - 5 mg/m³
Materials:	
Housing	Aluminum
Seals	Acrylonitrile Butadiene Rubber

	Actuating element	Compressed air connection		Qn 1 → 2	Qn 2 → 3	Weight	Fig.	Note	Part No.
		Input	Output						
				[l/min]	[l/min]	[kg]			
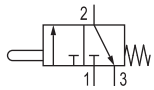	Plunger	M5	M5	190	150	0.036	Fig. 1	-	0820408001
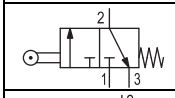	Roller	M5	M5	190	150	0.05	Fig. 2	-	0820408002
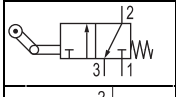	Roller lever, one-way trip	M5	M5	190	150	0.055	Fig. 3	-	0820408003
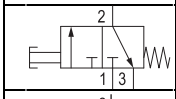	Push button	M5	M5	190	150	0.05	Fig. 4	-	0820408004
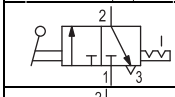	Lever	M5	M5	190	150	0.042	Fig. 5	-	0820408005
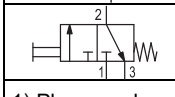	panel installation	M5	M5	190	150	0.068	Fig. 6	1); 2)	R450055451

1) Please order control button separately.
2) Cannot be combined with mushroom button with detent and rotary release R412012741
Nominal flow Qn at 6 bar and Δp = 1 bar

Accessories (to be ordered separately)

	Type	Part no.
	Spare parts kit	1827009103

Operating forces

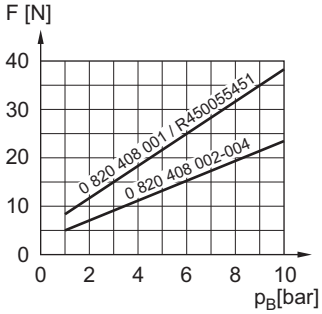

F = actuating force
P_B = Working pressure

Series AP Valves
3/2, mechanical actuation, M5 (10-32)

0820408001

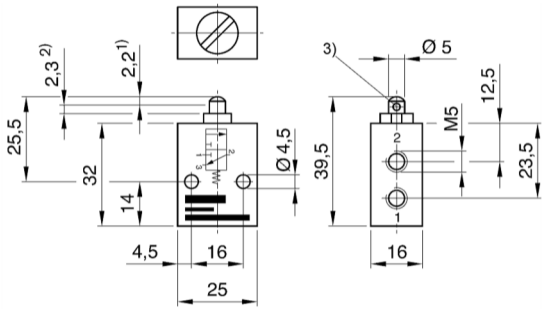

0820408002

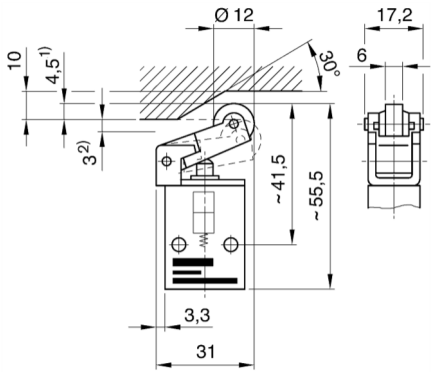

1) actuating stroke
2) overstroke
3) Exhaust
Dimensions of basic valve apply to all types of actuation.

0820408003

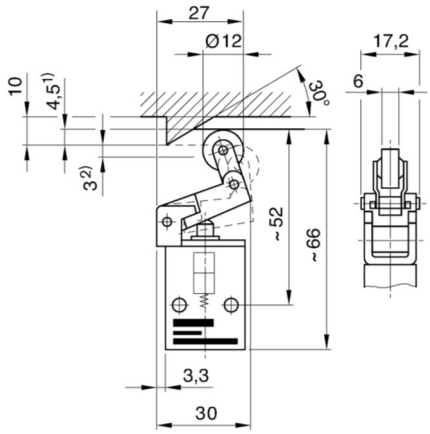

0820408004

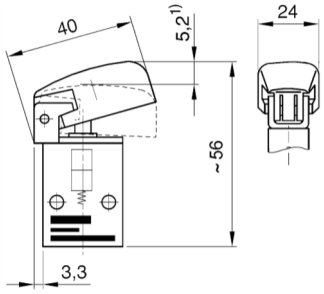

1) actuating stroke
2) overstroke

0820408005

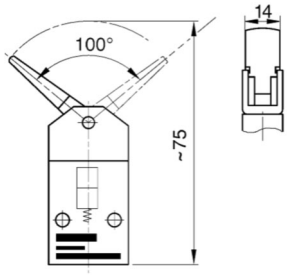

actuating torque: 5 Ncm

R450055451

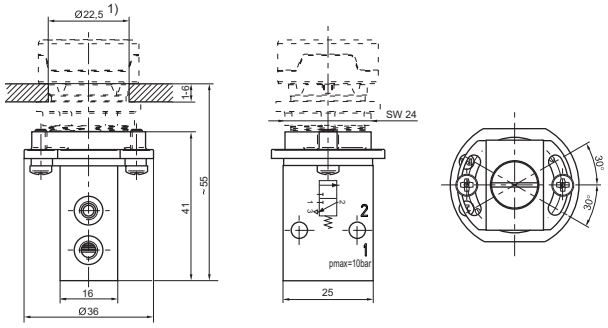

1) cut-out in the front plate

Series AP Valves

3/2, mechanical actuation, 1/8” NPT or G1/8

Technical Data

Valve type		Poppet valve
Working pressure		0 - 10 bar (0-10psi)
Nominal flow rate		1 → 2: 250 l/min (0.25 C_v); 2 → 3: 150 l/min (0.15 C_v)
Operating force		see diagram
Temperature range		-30°C to +80°C (-22°F to +176°F)
Medium		Compressed air, lubricated (class 5-4-5 acc. to ISO 8573-1:2001) or non-lubricated (class 3-4-3 acc. to ISO 8573-1:2001)
Weight		see table
Material	Valve body	Aluminum
	Seals	Acrylonitrile Butadiene Rubber



Technical information
Elastic sealing, valve function non-overlapping
Vented exhaust at all exhaust ports
Mounting via 2 threads in the body or in control panel
Can also be used as 2/2 by closing off one port

Part no.				
Symbol	**Control device**	**Weight [kg] (lbs)**	**Part no. G1/8**	**Part no. 1/8” NPT**
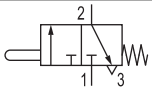	Plunger	0,070 (0.154)	0820402101	—
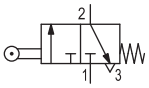	Roller	0,080 (0.176)	0820402102	0820402108
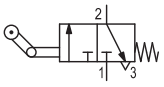	Roller lever, one-way trip	0,085 (0.187)	0820402103	0820402109
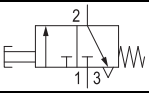	Push button	0,085 (0.187)	0820402104	—
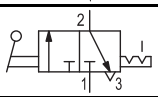	Lever	0,075 (0.165)	0820402105	—
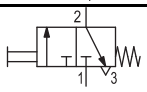	Control panel installation*	0,090 (0.198)	R450055452	—

Accessories (to be ordered separately)

	Type	Part no.
	Spare parts kit	**1827009379**
	*Control device for panel installation Name plates for control devices Additional accessories	

Operating forces

F = actuating force
P_B = Working pressure

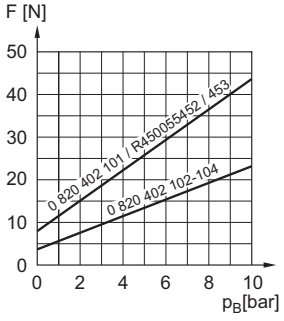

Series AP Valves

3/2, mechanical actuation, 1/8” NPT or G1/8

0820408001

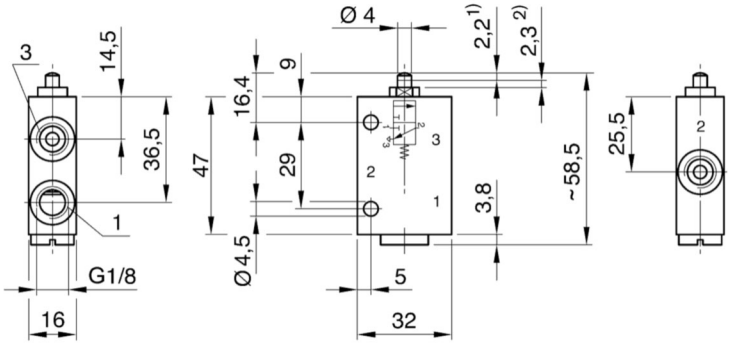

0820402102 or 0820402108

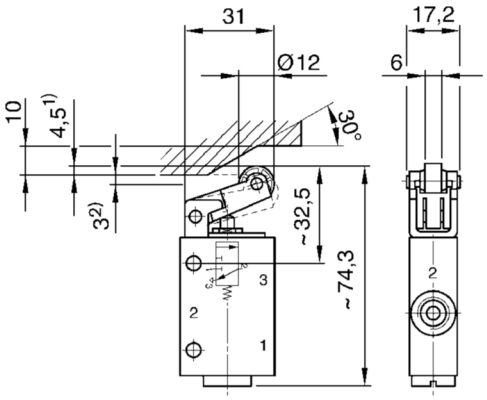

1) actuating stroke
2) overstroke
Dimensions of basic valve apply to all types of actuation.

0820408001 or 0820402109

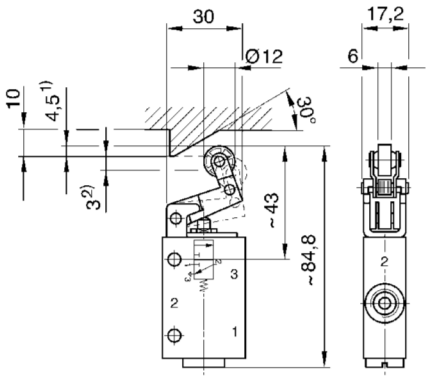

0820402104 or 0820402110

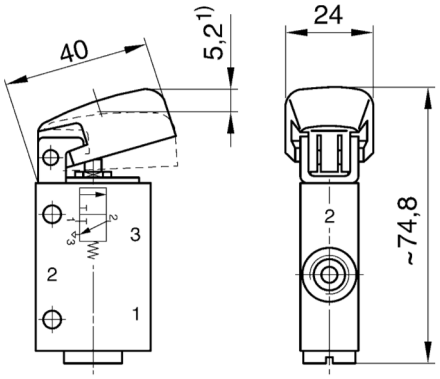

1) actuating stroke
2) overstroke

0820408001 or 0820402111

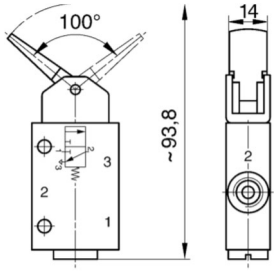

R450055452

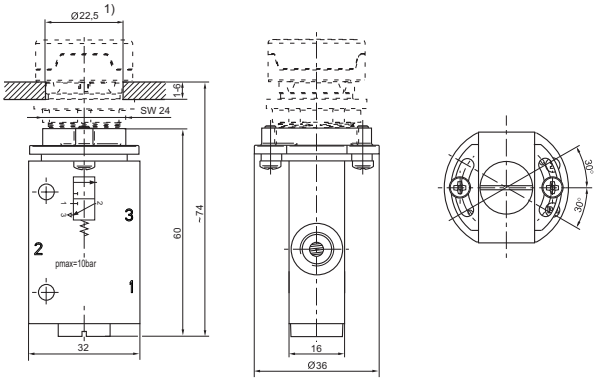

Cut-out in the front plate

Series AP Valves

3/2, mechanical actuation, 1/4” NPT or G1/4

Technical Data

Valve type		Poppet valve
Working pressure		0 - 10 bar (0 - 145psi)
Nominal flow rate		550 l/min (0.55 C_v)
Operating force		See diagram
Temperature range		-30°C to +80°C (-22°F to +176°F)
Medium		Compressed air, lubricated (class 5-4-5 acc. to ISO 8573-1:2001) or Non-lubricated (class 3-4-3 acc. to ISO 8573-1:2001)
Weight		see table
Material	Valve body	Aluminum
	Seals	Acrylonitrile Butadiene Rubber



Technical information

Elastic sealing, valve function non-overlapping
Vented exhaust at all exhaust ports
Reverse flow also possible
Optionally with protective cover or pedal actuation
Pressure gauge connection on front
Accident prevention regulations: The actuating mechanism of machines must exclude an unintentional actuation
If necessary, the switch must be secured.
If protected installation not possible, than installation of the pedal-operated valve under protection cover.

Part no.

Symbol	Control device	Weight [kg] (lbs)	Part no. G1/4	Part no. 1/4” NPT
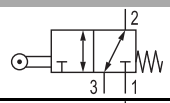	Plunger	0,165 (0.364)	**0820400001**	**0820400010**
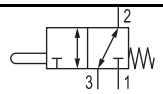	Roller	0,265 (0.584)	**0820400002**	**—**
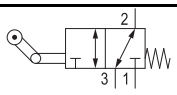	Roller lever, one-way trip	0,280 (0.617)	**0820400003**	**0820400012**
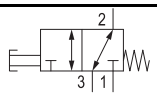	Lever, horizontal	0,290 (0.639)	**0820400004**	**—**
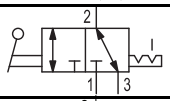	Lever, vertical	0,270 (0.595)	**0820400005**	**0820400014**
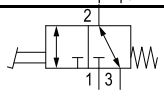	Pedal	1,200 (2.646)	**0820400006**	**0820400015**
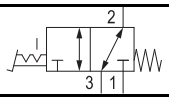	Pedal with detent	1,220 (2.690)	**0820400008**	**—**

Accessories (to be ordered separately)

	Type	Part no.
	Spare parts kit	**1827009097**
	Protective covers for pedal valves	See end of section

Series AP Valves
3/2, mechanical actuation, 1/4” NPT or G1/4

Operating forces

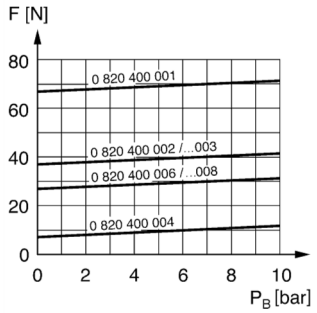

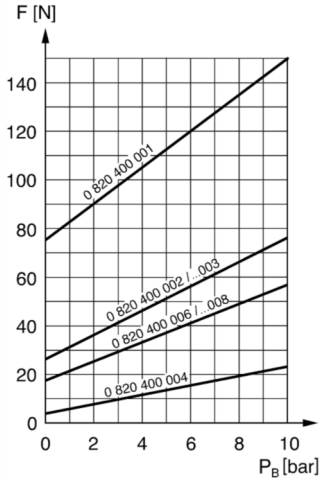

F = actuating force
P_B = Working pressure

0820400001 or 0820400010

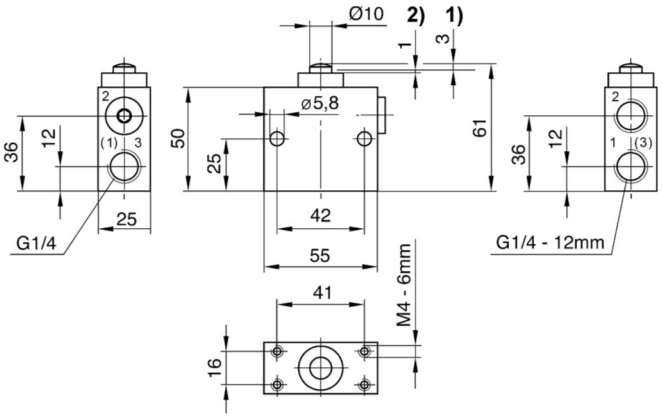

1) actuating stroke
2) overstroke
Dimensions of basic valve apply to all types of actuation.

0820400002

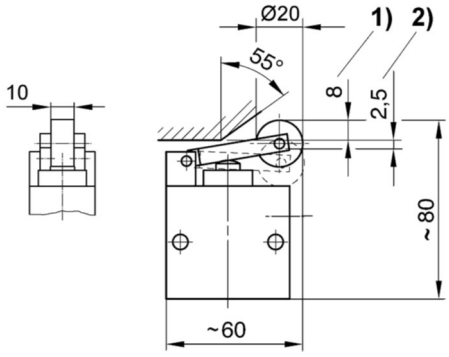

0820400003 or 0820400012

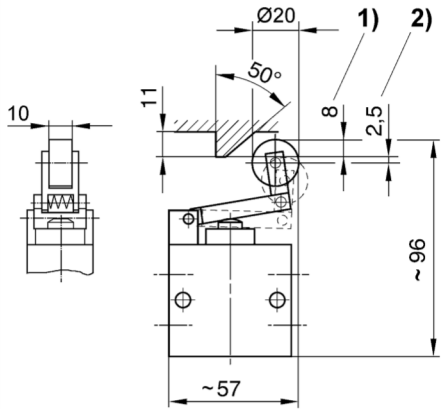

1) actuating stroke
2) overstroke

Series AP Valves

3/2, mechanical actuation, 1/4” NPT or G1/4

0820400004 or 0820400013

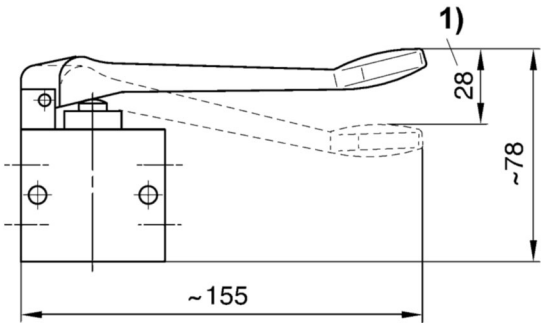

1) actuating stroke

0820400005 or 0820400014

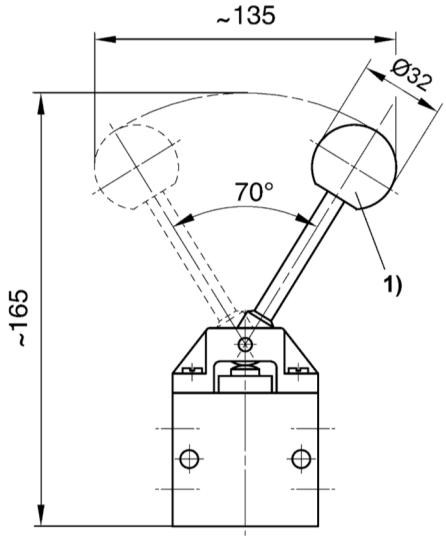

actuating torque: 40 Ncm
1) Ball

0820400006 or 0820400015

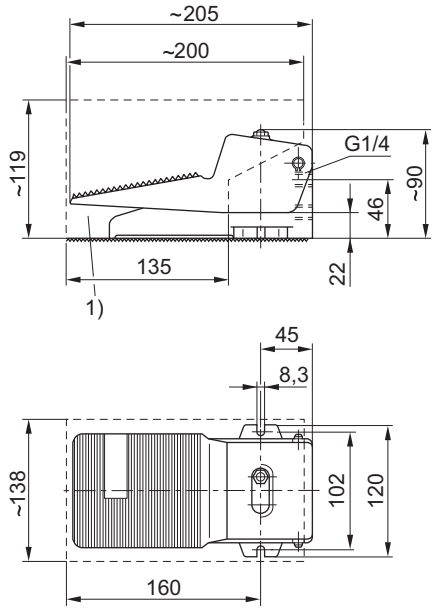

1) optional protective cover, part number 1828104001

0820400008 or 0820400016

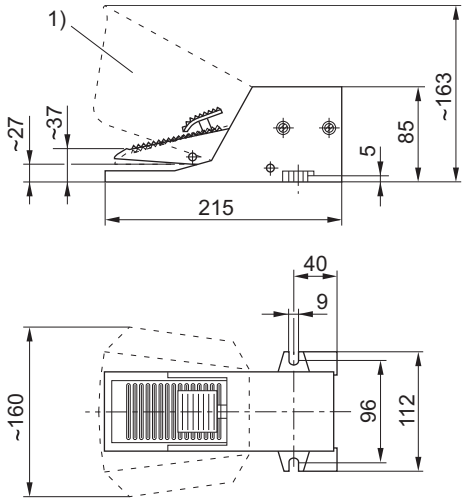

1) optional protective cover, part number 1828104002

Series AP Valves

4/2, mechanical actuation, 1/4” NPT or G1/4

Technical Data

Valve type		Poppet valve
Working pressure		0 - 10 bar (0 - 145psi)
Nominal flow rate		550 l/min (0.55 C_v)
Operating force		See diagram
Temperature range		-30°C to +80°C (-22°F to +176°F)
Medium		Compressed air, lubricated (class 5-4-5 acc. to ISO 8573-1:2001) or Non-lubricated (class 3-4-3 acc. to ISO 8573-1:2001)
Weight		see table
Material	Valve body	Aluminum
	Seals	Acrylonitrile Butadiene Rubber

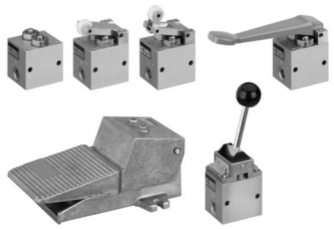

Technical information

Elastic sealing, valve function non-overlapping
Vented exhaust at all exhaust ports
Reverse flow also possible
Optionally with protective cover or pedal actuation
Pressure gauge connection on front
Accident prevention regulations: The actuating mechanism of machines must exclude an unintentional actuation
If necessary, the switch must be secured.
If protected installation not possible, than installation of the pedal-operated valve under protection cover.

Part no.				
Symbol	**Control device**	**Weight [kg] (lbs)**	**Part no. G1/4**	**Part no. 1/4” NPT**
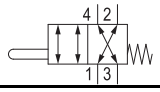	Plunger	0,330 (0.728)	**0820401001**	**0820401012**
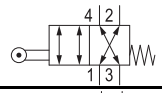	Roller	0,500 (1.102)	**0820401002**	**0820401013**
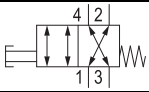	Lever, horizontal	0,520 (1.146)	**0820401004**	**—**
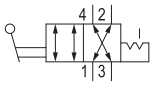	Lever, vertical	0,530 (1.168)	**0820401005**	**0820401016**
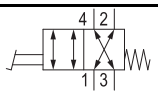	Pedal	1,300 (2.866)	**0820401006**	**0820401017**
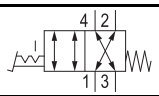	Pedal with detent	1,420 (3.131)	**0820401008**	**—**

Accessories (to be ordered separately)		
	Type	**Part no.**
	Spare parts kit	**1827009097**
	Protective covers for pedal valves	See end of section

Series AP Valves

4/2, mechanical actuation, 1/4” NPT or G1/4

Operating forces

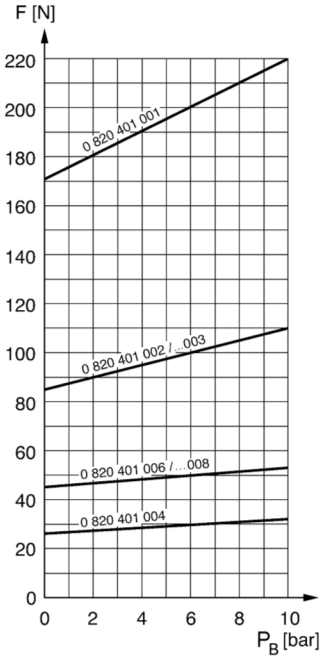

F = actuating force
P_B = Working pressure

0820401001 or 0820401013

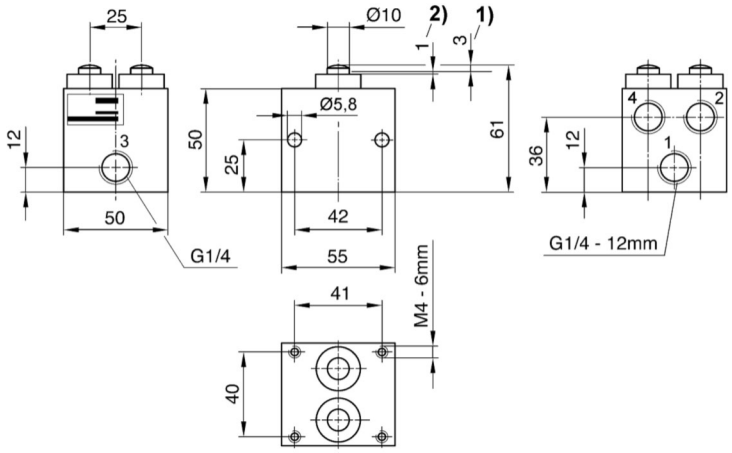

1) actuating stroke
2) overstroke
Dimensions of basic valve apply to all types of actuation.

Series AP Valves
4/2, mechanical actuation, 1/4” NPT or G1/4

0820401002 or 0820401013

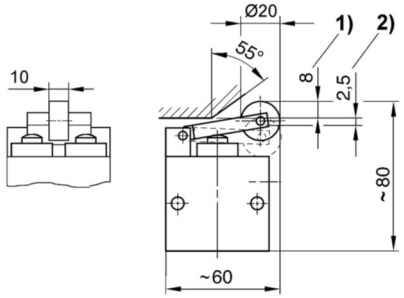

1) actuating stroke
2) overstroke

0820401003

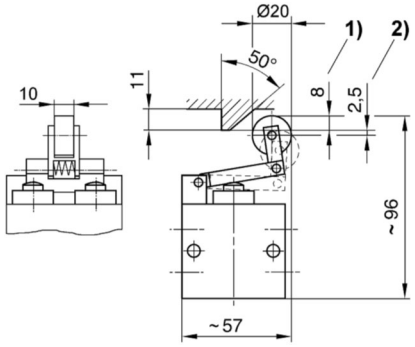

0820401004

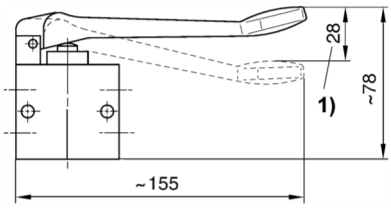

1) actuating stroke

0820401005 or 0820400016

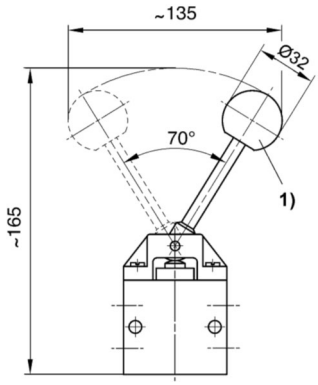

actuating torque: 40 Ncm
1) Ball

0820401006 or 0820401017 / 0820401008

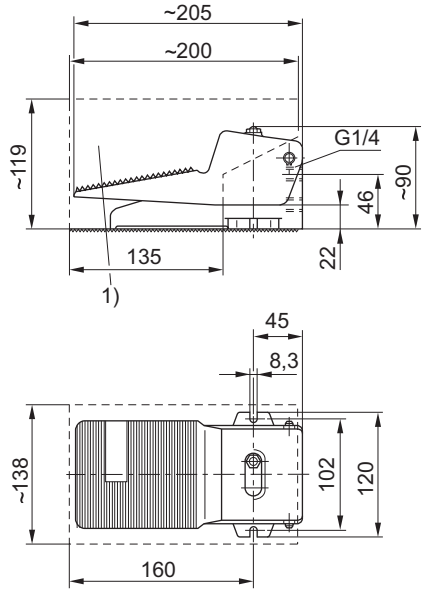

1) optional protective cover, part number 1828104001

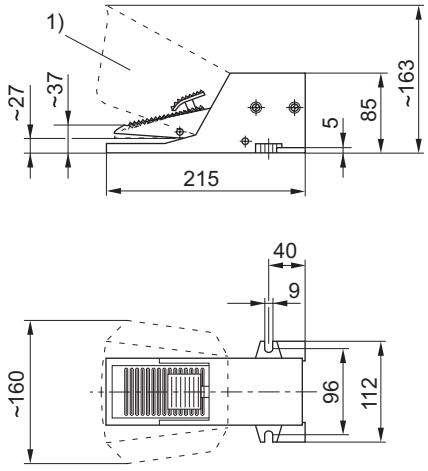

1) optional protective cover, part number 1828104002

Series AP Valves

Control devices for panel installation, labels and spare parts

Control devices for panel installation



Ambient temperature min./max.

-30°C / +70°C (-22°F / 158°F)

Technical Remarks

■ Combining an ST control panel valve with an actuating control may create an emergency OFF control device, which must comply with the applicable regulations in the EC Machinery Directive 2006/42/EC and the EN ISO 13850 and EN ISO 13849 standards. In terms of EN ISO 13849, an ST control panel valve is a single-channel component. A sturdier architecture must be selected to attain a higher performance level (c, d, e).

Version	Color	Material	Weight	Delivery quantity	Fig.	Note	Part No.
			[kg]	[Piece]			
Push button	Red	Polyamide	0.011	1	Fig. 1	-	**R412012734**
	Black						**R412012735**
	Yellow						**R412012736**
	Green						**R412012737**
Mushroom button	Red	Polyamide	0.024	1	Fig. 2	-	**R412012738**
	Green						**R412012739**
	Yellow						**R412012740**
Mushroom button with detent and rotary release	Red	Polyamide	0.047	1	Fig. 3	1)	**R412012741**
Lever switch	Red	Polyamide	0.014	1	Fig. 4	-	**R412012742**
	White						**R412012743**
Rotary switch with two notched positions	Red	Polyamide	0.02	1	Fig. 5	-	**R412012744**
	Grey						**R412012745**
Push button with detent and rotary release	Black	Polyamide	0.032	1	Fig. 6	-	**R412012748**
Rotary lock with two keys	Grey	Polyamide	0.05	1	Fig. 7	2) 3)	**R412012746** **R412015479**

1) Only for ST series spring-return valves (R422002211, R422002213)
2) The key can be removed only if the button is in the actuated state.
3) The key can be removed in the actuated or non-actuated state.

Note: For dimensions, see online catalog

Series AP Valves

Control devices for panel installation, labels and spare parts

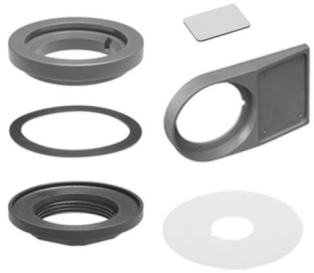

Ambient temperature min./max.

-30°C / +70°C (-22°F / 158°F)

Version	Color	Material	Weight	Fig.	Note	Part No.
			[kg]			
Label base	Anthracite	Polyamide	0.003	Fig. 1	-	R412012749
Name plates, angular	silver	Polyvinyl chloride	0.001	Fig. 2	-	R412012750
Emergency OFF sign, round	Yellow	Polyvinyl chloride	0.001	Fig. 3	1)	R412012751
Blanking plug	Anthracite	Polyamide	0.026	Fig. 4	-	R412012752
Mounting nut M22x1	Black	Polyamide	0.007	Fig. 5	-	R412012753
Spare key	-	-	0.001	Fig. 6	-	R412012989
Reduction , Ø30.5 to Ø22.5	-	Polyamide	0.001	Fig. 7	-	R412015512

1) Only for ST series spring-return valves (R422002211, R422002213)

Note: for dimensions, see online catalog.

Installation opening and spacings for control devices

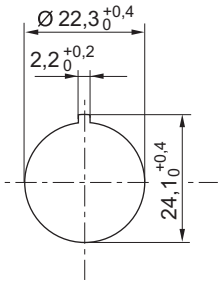

For version with label base 55 mm

Series AP Valves
Protective covers for 3/2 and 4/2 pedal-operated valves

Protective covers for 3/2 and 4/2 pedal-operated valves

Suitable for pedal-operated valves 0820400006, 0820400015, 0820401006, 0820401017

Protection against unintended activation
Support surface with ribbed rubber (secured against slipping)
Sheet metal housing, varnished
Optional mounting of the protective cover on the pedal-operated valve
or protective cover and pedal-operated valve on the machine



Part no.

	Type	Weight [kg] (lbs)	Part no.
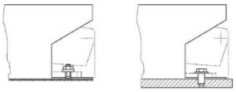	Protective cover	1,000 (2.205)	**1828104001**

Assembly option:
1. Pedal-operated valve with protective cover for loose mounting
2. Pedal-operated valve with protective cover for fixed mounting on a base

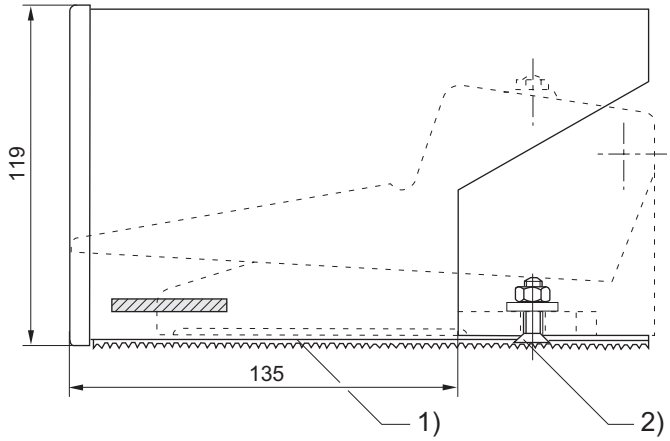

1) Ribbed rubber
2) Flat-head screw with hexagon socket M6 x 20

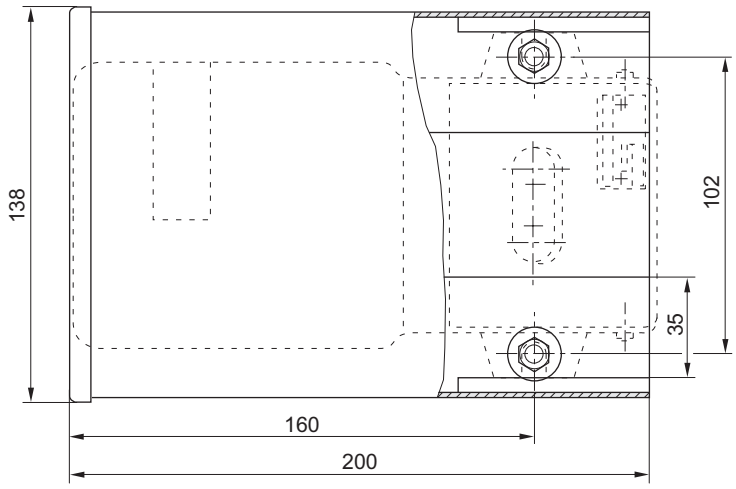

Series AP Valves

Protective covers for 3/2 and 4/2 pedal-operated valves with detent

Protection covers for 3/2 and 4/2 pedal-operated valves with detent

Suitable for pedal-operated valve with detent 0820400008, 0820400016, 0820401008, 0820401018
Protection against unintended activation
Varnished aluminum housing



Part no.

	Type	Weight [kg] (lbs)	Part no.
	Protective cover	0,350 (0.772)	**1828104002**

2 mounting screws (DIN 8458, galvanized) are included in the scope of delivery.

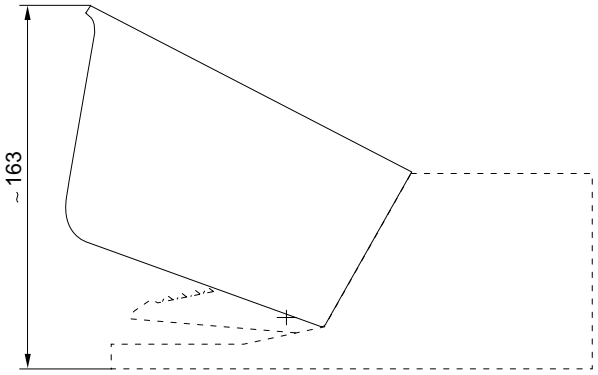

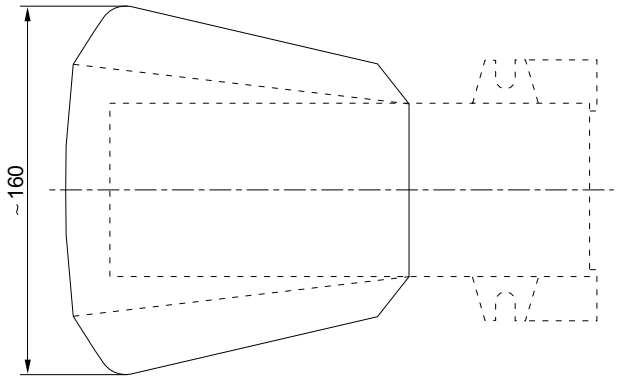

Rotair® Block Valves
5/2 and 5/3, lever operated

1/8”, 1/4” and 3/8” NPTF 4-WAY 5-PORTED



4 Way / 2 Position Detented



4 Way / 3 Position Detented (exhaust open center)

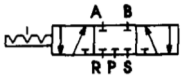

4 Way /3 Position Detented (closed center)



TECHNICAL DATA:
Port Sizes: 1/8”, 1/4” and 3/8” NPTF
Working Pressure: 0 to 150 psi
Flow: C^V 1/8” = 1.0, 1/4” = 1.1, 3/8” = 1.2
Temperature Range: -10°F to +175°F
Media: Air, either lubricated or non-lubricated
Materials: Body: Zinc die casting
Seals: Buna N

1/8” VALVES

ORDERING REFERENCE			Port Size	Flow C_v	Weight lb.
New Part No.	Old Part No.	Description			
R432013830	P -067772-00001	5 ports, 2-pos. detented	1/8” NPTF	1.0	1.6
R432013833	P -067773-00001	5 ports, 3-pos. detented (exhaust open center)			
R432013836	P -067774-00001	5 ports, 3 pos. detented (closed center)			

1/4” VALVES

ORDERING REFERENCE			Port Size	Flow C_v	Weight lb.
New Part No.	Old Part No.	Description			
R432013831	P -067772-00002	5 ports, 2-pos. detented	1/4” NPTF	1.1	1.6
R432013834	P -067773-00002	5 ports, 3-pos. detented (exhaust open center)			
R432013837	P -067774-00002	5 ports, 3 pos. detented (closed center)			

3/8” VALVES

ORDERING REFERENCE			Port Size	Flow C_v	Weight lb.
New Part No.	Old Part No.	Description			
R432013832	P -067772-00003	5 ports, 2-pos. detented	3/8” NPTF	1.2	1.6
R432013835	P -067773-00003	5 ports, 3-pos. detented (exhaust open center)			
R432013838	P -067774-00003	5 ports, 3-pos. detented (closed center)			

Rotair® Block Valves
Dimensions and repair kits

Dimensions for 1/8”, 1/4” and 3/8” (all same except port sizes)



Port	Marking
P=	Supply Pressure
A & B=	Delivery (Cylinder) Ports
R & S=	Exhaust Ports

Repair Kits:

New Part Number	Old Part Number	Description
R432013883	P -067911-00000	1/8” Kit, for part numbers R432013830, R432013833, and R432013836 (old part numbers P -067772-00001, P -067773-00001, and P -067774-00001) (Includes seals, valve inserts, springs, etc.)
		1/4” & 3/8” Kit, 2 and 3 Position (Includes seals, valve inserts, springs, etc.). For old and new style valves.

Note: Repair kits for old design part numbers P-067769-00000, P-067770-00000, and P-067771-00000 are no longer available.

Series CD04 Valves

3/2-way valve, 0.9 C_V, 1/8" PTF* or G 1/8 ports
Manual override, with detent



Version	Spool valve, zero overlap
Pilot	internal
Sealing principle	soft sealing
Working pressure min./max.	3 bar / 10 bar (44 psi / 145 psi)
Control pressure min./max.	3 bar / 10 bar (44 psi / 145 psi)
Ambient temperature min./max.	-15°C / +50°C (+5°F / +122°F)
Medium temperature min./max.	-15°C / +50°C (+5°F / +122°F)
Medium	Compressed air
Max. particle size	50 µm
Oil content of compressed air	0 mg/m^3 - 1 mg/m^3
Compressed air connection	According to ANSI B1.20.3
Connector standard	EN 175301-803:2006
Protection call according to EN 60529:2000 with electrical connector/plug	IP 65 (NEMA 4)
Compatibility index	14
Duty cycle	100%
Materials:	
Housing	Die cast zinc; Polyamide, fiber-glass reinforced
Seals	Acrylonitrile Butadience Rubber

Technical Remarks

- The pressure dew point must be at least 15°C (59°F) under ambient and medium temperature and may not exceed 3°C (37°F).
- The oil content of air pressure must remain constant during the life cycle.
- Use only the approved oil form AVENTICS, see online chapter "Technical information".
- Option valve: The input and output compressed air connections can be exchanged. The valve can thereby be used in the NC or NO operating mode.

Operating voltage			Voltage tolerance			Power consumption	Switch-on power		Holding power	
DC	AC 50 Hz	AC 60 Hz	DC	AC 50 Hz	AC 60 Hz	DC	AC 50 Hz	AC 60 Hz	AC 50 Hz	AC 60 Hz
						W	VA	VA	VA	VA
12 V	-	-	-10% / +10%	-	-	4.6	-	-	-	-
24 V	-	-	-10% / +10%	-	-	4.8	-	-	-	-
-	110 V	110 V	-	-20% / +10%	-10% / +20%	-	10.8	9.5	8.3	7.2

Inch (PTF) Ported Versions:

		MO	Compressed air connection				Operating voltage			Flow rate value		Part No.
			Input	Output	Exhaust	Pilot control exhaust	DC	AC 50 Hz	AC 60 Hz	Qn	Qn 1 ► 2	
										[l/min]		
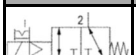	NC, NO		PTF 1/8-27	PTF 1/8-27	PTF 1/8-27	M5	12 V 24 V -	- - 110 V	- - 110 V	900	900	R412012695 R412012696 R412012698
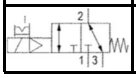	NC, NO		PTF 1/8-27	PTF 1/8-27	PTF 1/8-27	M5	-	-	-	900	900	R412012700

*PTF-SAE short (NPT short) threads

Series CD04 Valves

3/2-way valve, 0.9 C_V, 1/8" PTF* or G 1/8 ports
Manual override, with detent

Inch (PTF) Ported Versions (cont.):

Part No.	Flow rate value	Switch-on time	Switch-off time	Weight	Note
	Qn 2 ►3				
	[l/min]	[ms]	[ms]	[kg]	
R412012695 R412012696 R412012698	900	13	27	0.32	-
R412012700	900	-	-	0.26	1)

MO = Manual override
1.) Basic valve without coil
Nominal flow Qn at 6 bar (87 psi) and Δp = 1 bar (14.5 psi)

Metric (ISO G 1/8) Ported Versions:

		MO	Compressed air connection					Operating voltage			Flow rate value	Part no.
			Input	Output	Exhaust	Pilot connec-tion	Pilot control exhaust	DC	AC 50 Hz	AC 60 Hz	Qn	
											[l/min]	
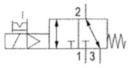	NC, NO		G 1/8	G 1/8	G 1/8	-	M5	24 V - - -	- 110 V 230 V 24 V	- 110 V 230 V 24 V	900	5772550220 5772555270 5772555280 5772555220
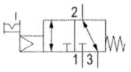	NC, NO		G 1/8	G 1/8	G 1/8	-	M5	-	-	-	900	5772555302
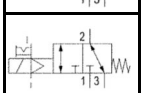	NC, NO		G 1/8	G 1/8	G 1/8	G 1/8	M5	24 V - -	- 110 V 230 V	- 110 V 230 V	900	5772560220 5772565270 5772565280
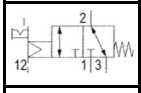	NC, NO		G 1/8	G 1/8	G 1/8	G 1/8	M5	-	-	-	900	5772565302
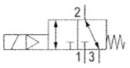	NC, NO	-	G 1/8	G 1/8	G 1/8	-	M5	24 V	-	-	900	5772590220

Part No.	Flow rate value	Flow rate value	Working pressure min./max.	Control pressure min./max.	Ambient tempera-ture min./ max.	Medium tempera-ture min./ max.	Switch-on time	Switch-off time	Weight	Note
	Qn 1 ►2	Qn 2 ►3								
	[l/min]	[l/min]	[bar]	[bar]	[°C]	[°C]	[ms]	[ms]	[kg]	
5772550220 5772555270 5772555280 5772555220	900	900	3 / 10	3 / 10	-15°C / +50°C	-15°C / +50°C	13	27	0.3	1)
5772555302	900	900	3 / 10	3 / 10	-15°C / +50°C	-15°C / +50°C	-	-	0.25	1); 3)
5772560220 5772565270 5772565280	900	900	-0.95 / 10	3 / 10	-15°C / +50°C	-15°C / +50°C	13	27	0.3	2)
5772565302	900	900	-0.95 / 10	3 / 10	-15°C / +50°C	-15°C / +50°C	-	-	0.25	2); 3)
5772590220	900	900	2.6 / 10	2.6 / 10	-20°C / +80°C	-20°C / +80°C	13	27	0.3	1); 4)

MO = Manual override
1) Pilot: internal
2) Pilot: external
3) Basic valve without coil
4) Higher power consumption
Nominal flow Qn at 6 bar and Δp = 1 bar

Series CD04 Valves

3/2-way valve, 0.9 C_v, 1/8” PTF* or G 1/8 ports
Manual override, with detent

Dimensions mm (Ports 1/8” PTF or ISO G1/8)

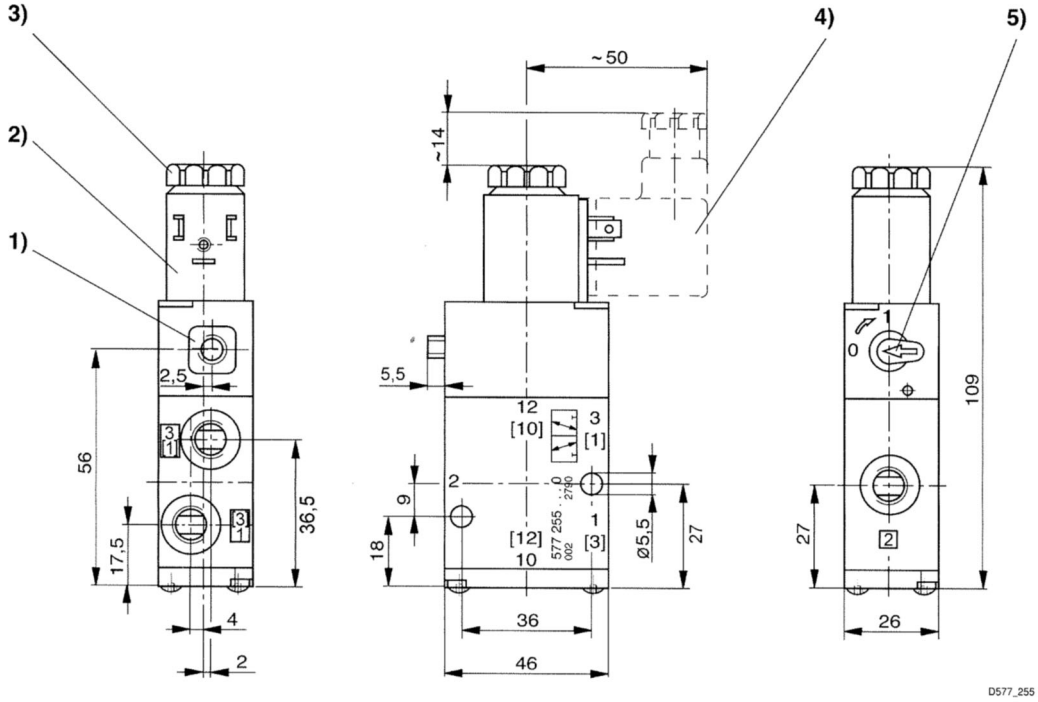

1) Metric version only with external pilot control G1/8
2) Coil can be rotated at 90° internals
3) After removal of cap M5 internal thread M5
4) Electrical connector can be plugged at 180° intervals
5) Manual override

Series CD04 Valves

5/2-way valve, 0.9 C_v, 1/8" PTF* or G 1/8 ports
Manual override, with detent - Single Solenoid

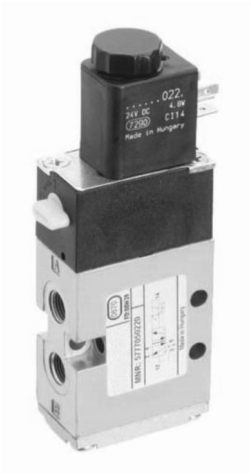

Version	Spool valve, zero overlap
Pilot	internal
Sealing principle	soft sealing
Mounting on manifold strip	P-strip
Working pressure min./max.	3 bar / 10 bar (44 psi / 145 psi)
Control pressure min./max.	3 bar / 10 bar (44 psi / 145 psi)
Ambient temperature min./max.	-15°C / +50°C (+5°F / +122°F)
Medium temperature min./max.	-15°C / +50°C (+5°F / +122°F)
Medium	Compressed air
Max. particle size	50 µm
Oil content of compressed air	0 mg/m^3 - 1 mg/m^3
Compressed air connection	According to ANSI B1.20.3
Connector standard	EN 175301-803:2006
Protection call according to EN 60529:2000 with electrical connector/plug	IP 65 (NEMA 4)
Compatibility index	14
Duty cycle	100%
Materials:	
Housing	Die cast zinc; Polyamide, fiber-glass reinforced
Seals	Acrylonitrile Butadience Rubber

Technical Remarks

- The pressure dew point must be at least 15°C (59°F) under ambient and medium temperature and may not exceed 3°C (37°F).
- The oil content of air pressure must remain constant during the life cycle.
- Use only the approved oil form AVENTICS, see online chapter "Technical information".

Operating voltage			Voltage tolerance			Power consumption	Switch-on power		Holding power	
DC	AC 50 Hz	AC 60 Hz	DC	AC 50 Hz	AC 60 Hz	DC	AC 50 Hz	AC 60 Hz	AC 50 Hz	AC 60 Hz
						W	VA	VA	VA	VA
12 V	-	-	-10% / +10%	-	-	4.6	-	-	-	-
24 V	-	-	-10% / +10%	-	-	4.8	-	-	-	-
-	110 V	110 V	-	-20% / +10%	-10% / +20%	-	10.8	9.5	8.3	7.2

Inch (NPTF) Ported Versions:

	MO	Compressed air connection				Operating voltage			Flow rate value		Part No.
		Input	Output	Exhaust	Pilot control exhaust	DC	AC 50 Hz	AC 60 Hz	Qn 1 ►2	Qn 2 ► 3	
									[l/min]		
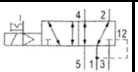		PTF 1/8-27	PTF 1/8-27	PTF 1/8-27	M5	12 V 24 V -	- - 110 V	- - 110 V	900	900	R412012840 R412012841 R412012842
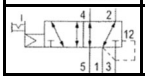		PTF 1/8-27	PTF 1/8-27	PTF 1/8-27	M5	-	-	-	900	900	R412012843

*PTF-SAE short (NPT short) threads

Series CD04 Valves

5/2-way valve, 0.9 C_v, 1/8" PTF* or G 1/8 ports
Manual override, with detent - Single Solenoid

Inch (NPTF) Ported Versions (cont.):

	MO	Compressed air connection				Operating voltage			Flow rate value		Part No.
		Input	Output	Exhaust	Pilot control exhaust	DC	AC 50 Hz	AC 60 Hz	Qn 1 ► 2	Qn 2 ► 3	
									[l/min]		
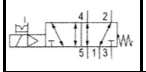		PTF 1/8-27	PTF 1/8-27	PTF 1/8-27	M5	12 V 24 V -	- - 110 V	- - 110 V	900	900	R412012708 R412012709 R412012711
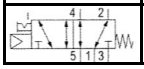		PTF 1/8-27	PTF 1/8-27	PTF 1/8-27	M5	-	-	-	900	900	R412012713

Part No.	Switch-on time	Switch-off time	Weight	Note
	[ms]	[ms]	[kg]	
R412012840 R412012841 R412012842	12	21	0.38	-
R412012843	12	21	0.33	1)
R412012708 R412012709 R412012711	12	21	0.38	-
R412012713	12	21	0.33	1)

MO = Manual override
1) Basic valve without coil
Nominal flow Qn at 6 bar (87 psi) and Δp = 1 bar (14.5 psi)

Metric (ISO G 1/8) Ported Versions:

	MO	Compressed air connection					Operating voltage			Flow rate value		Part No.
		Input	Output	Exhaust	Pilot connec-tion	Pilot control exhaust	DC	AC 50 Hz	AC 60 Hz	Qn	Qn 1 ► 2	
										[l/min]		
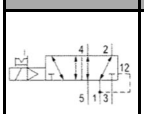		G 1/8	G 1/8	G 1/8	-	M5	12 V 24 V - - -	- - 110 V 230 V 24 V	- - 110 V 230 V 24 V	900	900	5777050210 5777050220 5777055270 5777055280 5777055220
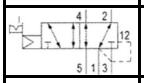		G 1/8	G 1/8	G 1/8	-	M5	-	-	-	900	900	5777055302
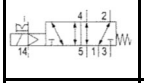		G 1/8	G 1/8	G 1/8	G 1/8	M5	24 V - - -	- 110 V 230 V 24 V	- 110 V 230 V 24 V	900	900	5777060220 5777065270 5777065280 5777065220
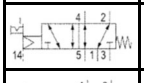		G 1/8	G 1/8	G 1/8	G 1/8	M5	-	-	-	900	900	5777065302
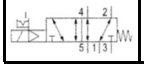		G 1/8	G 1/8	G 1/8	-	M5	24 V -	- 110 V	- 110 V	900	900	5777150220 5777155270

Series CD04 Valves

5/2-way valve, 0.9 C_V, 1/8” PTF* or G 1/8 ports
Manual override, with detent - Single Solenoid

Metric (ISO G 1/8) Ported Versions (cont.):

Part No.	Flow rate value	Working pressure min./max.	Switch-on time	Switch-off time	Weight	Note
	Qn 2 ► 3					
	[l/min]	[bar]	[ms]	[ms]	[kg]	
5777050210 5777050220 5777055270 5777055280 5777055220	900	3 / 10	12	21	0.39	1)
5777055302	900	3 / 10	-	-	0.34	1); 3)
5777060220 5777065270 5777065280 5777065220	900	-0.95 / 10	12	21	0.39	2)
5777065302	900	-0.95 / 10	-	-	0.34	2); 3)
5777150220 5777155270	900	3 / 10	12	21	0.39	1)

MO = Manual override
1) Pilot: internal
2) Pilot: external
3) Basic valve without coil
Nominal flow Qn at 6 bar and Δp = 1 bar

Dimensions mm (Ports 1/8” PTF or ISO G1/8)

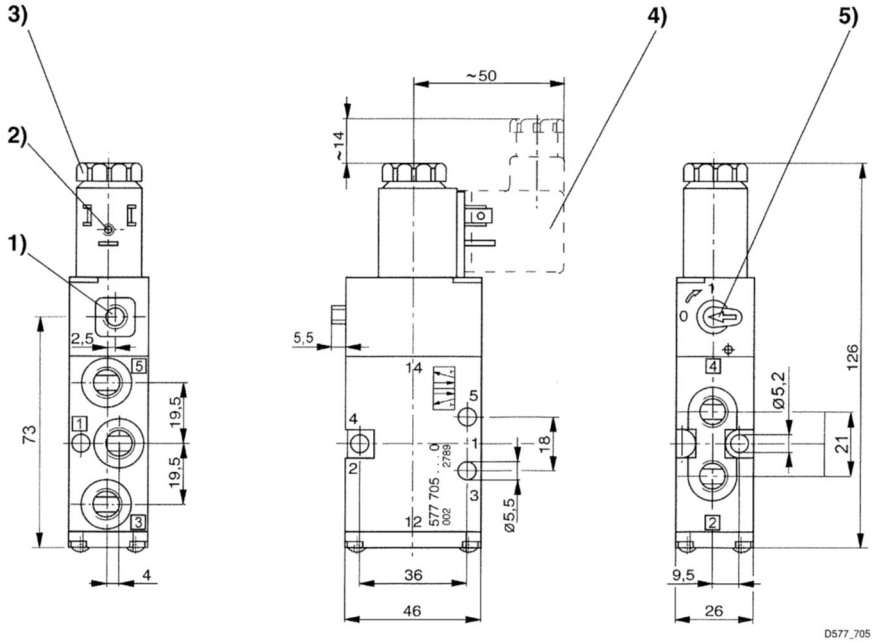

1) Metric version only with external pilot control G1/8
2) Coil can be rotated at 90° internals
3) After removal of cap M5 internal thread M5
4) Electrical connector can be plugged at 180° intervals
5) Manual override

Series CD04 Valves

5/2-way valve, 0.9 C_V, 1/8" PTF* or G 1/8 ports
Manual override, with detent - Double Solenoid



Version	Spool valve, zero overlap
Pilot	internal
Sealing principle	soft sealing
Mounting on manifold strip	P-strip
Working pressure min./max.	2 bar / 10 bar (29 psi / 145 psi)
Control pressure min./max.	2 bar / 10 bar (29 psi / 145 psi)
Ambient temperature min./max.	-15°C / +50°C (+5°F / +122°F)
Medium temperature min./max.	-15°C / +50°C (+5°F / +122°F)
Medium	Compressed air
Max. particle size	50 µm
Oil content of compressed air	0 mg/m^3 - 1 mg/m^3
Compressed air connection	According to ANSI B1.20.3
Connector standard	EN 175301-803:2006
Protection call according to EN 60529:2000 with electrical connector/plug	IP 65 (NEMA 4)
Compatibility index	14
Duty cycle	100%
Materials:	
Housing	Die cast zinc; Polyamide, fiber-glass reinforced
Seals	Acrylonitrile Butadience Rubber

Technical Remarks

- The pressure dew point must be at least 15°C (59°F) under ambient and medium temperature and may not exceed 3°C (37°F).
- The oil content of air pressure must remain constant during the life cycle.
- Use only the approved oil form AVENTICS, see online chapter "Technical information".

Operating voltage			Voltage tolerance			Power consumption	Switch-on power		Holding power	
DC	AC 50 Hz	AC 60 Hz	DC	AC 50 Hz	AC 60 Hz	DC	AC 50 Hz	AC 60 Hz	AC 50 Hz	AC 60 Hz
						W	VA	VA	VA	VA
12 V	-	-	-10% / +10%	-	-	4.6	-	-	-	-
24 V	-	-	-10% / +10%	-	-	4.8	-	-	-	-
-	110 V	110 V	-	-20% / +10%	-10% / +20%	-	10.8	9.5	8.3	7.2

Inch (NPTF) Ported Versions:

	MO	Compressed air connection				Operating voltage			Flow rate value		Part No.
		Input	Output	Exhaust	Pilot control exhaust	DC	AC 50 Hz	AC 60 Hz	Qn 1 ►2	Qn 2 ► 3	
									[l/min]		
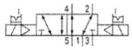		PTF 1/8-27	PTF 1/8-27	PTF 1/8-27	M5	12 V 24 V -	- - 110 V	- - 110 V	900	900	R412012999 R412013000 R412013001
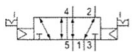		PTF 1/8-27	PTF 1/8-27	PTF 1/8-27	M5	-	-	-	900	900	R412013002

*PTF-SAE short (NPT short) threads

Series CD04 Valves

5/2-way valve, 0.9 C_v, 1/8" PTF* or G 1/8 ports
Manual override, with detent - Double Solenoid

Inch (NPTF) Ported Versions (cont.):

Part No.	Switch-on time	Switch-off time	Weight	Note
	[ms]	[ms]	[kg]	
R412012999 R412013000 R412013001	12	21	0.46	-
R412013002	12	21	0.36	1)

MO = Manual override
1) Basic valve without coil
Nominal flow Qn at 6 bar (87 psi) and ∆p = 1 bar (14.5 psi)

Metric (ISO G 1/8) Ported Versions:

	MO	Compressed air connection					Operating voltage			Flow rate value		Part No.
		Input	Output	Exhaust	Pilot connec-tion	Pilot control exhaust	DC	AC 50 Hz	AC 60 Hz	Qn	Qn 1 ► 2	
										[l/min]		
		G 1/8	G 1/8	G 1/8	-	M5	12 V 24 V - - -	- - 24 V 110 V 230 V	- - 24 V 110 V 230 V	900	900	R412008841 5777250220 5777255220 5777255270 5777255280

	MO	Compressed air connection					Operating voltage			Flow rate value		Part No.
		Input	Output	Exhaust	Pilot connec-tion	Pilot control exhaust	DC	AC 50 Hz	AC 60 Hz	Qn	Qn 1 ► 2	
										[l/min]		
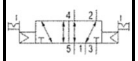		G 1/8	G 1/8	G 1/8	-	M5	-	-	-	900	900	5777255302
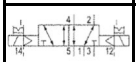		G 1/8	G 1/8	G 1/8	G 1/8	M5	24 V -	- 230 V	- 230 V	900	900	5777260220 5777265280
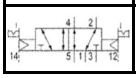		G 1/8	G 1/8	G 1/8	G 1/8	M5	-	-	-	900	900	5777265302

Part No.	Flow rate value	Working pressure min./max.	Switch-on time	Switch-off time	Weight	Note
	Qn 2 ► 3					
	[l/min]	[bar]	[ms]	[ms]	[kg]	
R412008841 5777250220 5777255220 5777255270 5777255280	900	2 / 10	12	12	0.49	1)
5777055302	900	2 / 10	-	-	0.36	1); 3)
5777260220 5777265280	900	-0.95 / 10	12	12	0.5	2)
5777065302	900	-0.95 / 10	-	-	0.36	2); 3)

MO = Manual override
1) Pilot: internal
2) Pilot: external
3) Basic valve without coil
Nominal flow Qn at 6 bar and ∆p = 1 bar

Series CD04 Valves

5/2-way valve, 0.9 C_v, 1/8” PTF* or G 1/8 ports
Manual override, with detent - Double Solenoid

Dimensions mm (Ports 1/8” PTF or ISO G1/8)

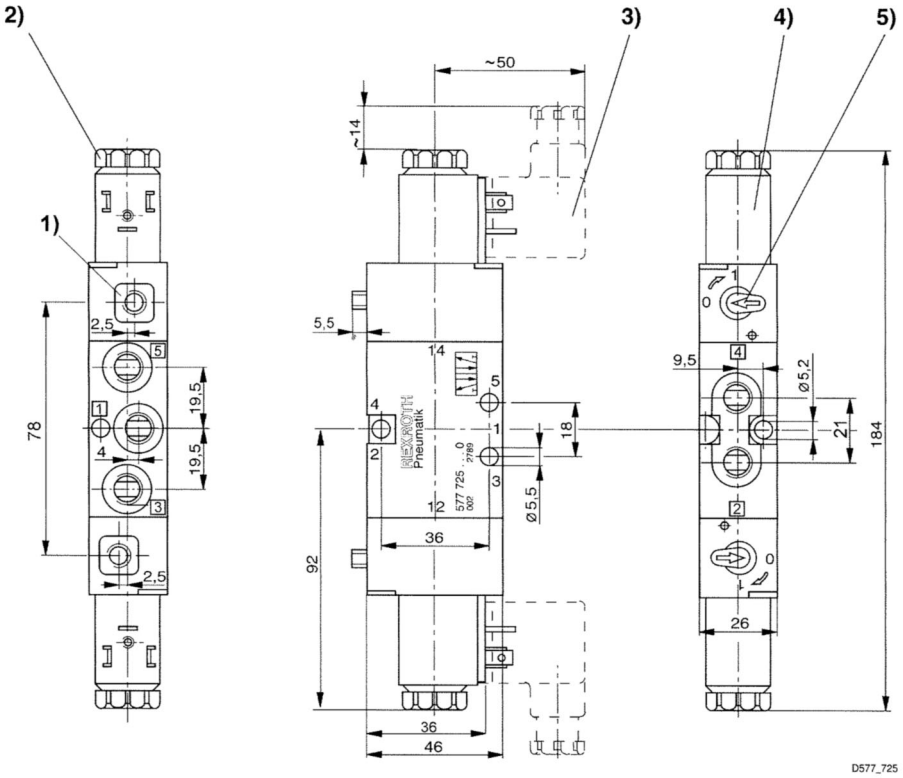

1) Metric version only with external pilot control G1/8
2) Coil can be rotated at 90° internals
3) After removal of cap M5 internal thread M5
4) Electrical connector can be plugged at 180° intervals
5) Manual override

Series CD04 Valves

5/3-way valve, 0.9 C_v, 1/8” PTF* or G 1/8 ports
Manual override, with detent - Double Solenoid



Version	Spool valve, zero overlap
Pilot	internal
Sealing principle	soft sealing
Mounting on manifold strip	P-strip
Working pressure min./max.	3.5 bar / 10 bar (51 psi / 145 psi)
Control pressure min./max.	3.5 bar / 10 bar (51 psi / 145 psi)
Ambient temperature min./max.	-15°C / +50°C (+5°F / +122°F)
Medium temperature min./max.	-15°C / +50°C (+5°F / +122°F)
Medium	Compressed air
Max. particle size	50 µm
Oil content of compressed air	0 mg/m^3 - 1 mg/m^3
Compressed air connection	According to ANSI B1.20.3
Connector standard	EN 175301-803:2006
Protection call according to EN 60529:2000 with electrical connector/plug	IP 65 (NEMA 4)
Compatibility index	14
Duty cycle	100%
Materials:	
Housing	Die cast zinc; Polyamide, fiber-glass reinforced
Seals	Acrylonitrile Butadience Rubber

Technical Remarks

- The pressure dew point must be at least 15°C (59°F) under ambient and medium temperature and may not exceed 3°C (37°F).
- The oil content of air pressure must remain constant during the life cycle.
- Use only the approved oil form AVENTICS, see online chapter “Technical information”.

Operating voltage			Voltage tolerance			Power consumption	Switch-on power		Holding power	
DC	AC 50 Hz	AC 60 Hz	DC	AC 50 Hz	AC 60 Hz	DC	AC 50 Hz	AC 60 Hz	AC 50 Hz	AC 60 Hz
						W	VA	VA	VA	VA
12 V	-	-	-10% / +10%	-	-	4.6	-	-	-	-
24 V	-	-	-10% / +10%	-	-	4.8	-	-	-	-
-	110 V	110 V	-	-20% / +10%	-10% / +20%	-	10.8	9.5	8.3	7.2

Inch (NPTF) Ported Versions:

	MO	Compressed air connection				Operating voltage			Flow rate value			Part No.
		Input	Output	Exhaust	Pilot control exhaust	DC	AC 50 Hz	AC 60 Hz	Qn	Qn 1 ► 2	Qn 2 ► 3	
									[l/min]			
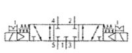		PTF 1/8-27	PTF 1/8-27	PTF 1/8-27	M5	12 V 24 V -	- - 110 V	- - 110 V	900	900	900	R412013018 R412013019 R412013020
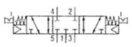		PTF 1/8-27	PTF 1/8-27	PTF 1/8-27	M5	-	-	-	900	900	900	R412012852
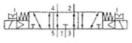		PTF 1/8-27	PTF 1/8-27	PTF 1/8-27	M5	12 V 24 V -	- - 110 V	- - 110 V	900	900	900	R412013015 R412013016 R412013017

*PTF-SAE short (NPT short) threads

Series CD04 Valves

5/3-way valve, 0.9 C_v, 1/8" PTF* or G 1/8 ports
Manual override, with detent - Double Solenoid

Inch (NPTF) Ported Versions (cont.):

	MO	Compressed air connection				Operating voltage			Flow rate value			Part No.
		Input	Output	Exhaust	Pilot control exhaust	DC	AC 50 Hz	AC 60 Hz	Qn	Qn 1 ► 2	Qn 2 ► 3	
									[l/min]			
		PTF 1/8-27	PTF 1/8-27	PTF 1/8-27	M5	-	-	-	900	900	900	R412012861
		PTF 1/8-27	PTF 1/8-27	PTF 1/8-27	M5	12 V 24 V -	- - 110 V	- - 110 V	900	900	900	R412013011 R412013012 R412013014
		PTF 1/8-27	PTF 1/8-27	PTF 1/8-27	M5	-	-	-	900	900	900	R412012858

Part No.	Switch-on time	Switch-off time	Weight	Note
	[ms]	[ms]	[kg]	
R412013018 R412013019 R412013020	12	27	0.49	-
R412012852	12	27	0.39	1)
R412013015 R412013016 R412013017	12	27	0.49	-
R412012861	12	27	0.39	1)
R412013011 R412013012 R412013014	12	27	0.49	-
R412012858	12	27	0.39	1)

MO = Manual override
1) Basic valve without coil
Nominal flow Qn at 6 bar (87 psi) and Δp = 1 bar (14.5 psi)

Metric (ISO G 1/8) Ported Versions:

	MO	Compressed air connection				Operating voltage			Flow rate value			Part No.
		Input	Output	Exhaust	Pilot control exhaust	DC	AC 50 Hz	AC 60 Hz	Qn	Qn 1 ► 2	Qn 2 ► 3	
									[l/min]			
		G 1/8	G 1/8	G 1/8	M5	24 V -	- 230 V	- 230 V	900	900	900	5777420220 5777425280
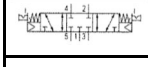		G 1/8	G 1/8	G 1/8	M5	-	-	-	900	900	900	5777425302
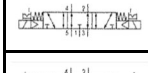		G 1/8	G 1/8	G 1/8	M5	24 V -	- 230 V	- 230 V	900	900	900	5777410220 5777415280
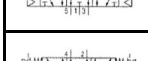		G 1/8	G 1/8	G 1/8	M5	-	-	-	900	900	900	5777415302
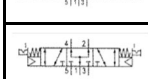		G 1/8	G 1/8	G 1/8	M5	24 V -	- 230 V	- 230 V	900	900	900	5777400220 5777405280
		G 1/8	G 1/8	G 1/8	M5	-	-	-	900	900	900	5777405302

Series CD04 Valves

5/3-way valve, 0.9 C_v, 1/8" PTF* or G 1/8 ports
Manual override, with detent - Double Solenoid

Metric (ISO G 1/8) Ported Versions (cont.):

Part No.	Switch-on time	Switch-off time	Weight	Note
	[ms]	[ms]	[kg]	
5777420220 5777425280	12	27	0.5	-
5777425302	-	-	0.39	1)
5777410220 5777415280	12	27	0.5	-
5777415302	-	-	0.39	1)
5777400220 5777405280	12	27	0.5	-
5777405302	-	-	0.39	1)

MO = Manual override
1) Basic valve without coil
Nominal flow Qn at 6 bar (87 psi) and Δp = 1 bar (14.5 psi)

Dimensions mm (Ports 1/8" PTF or ISO G1/8)

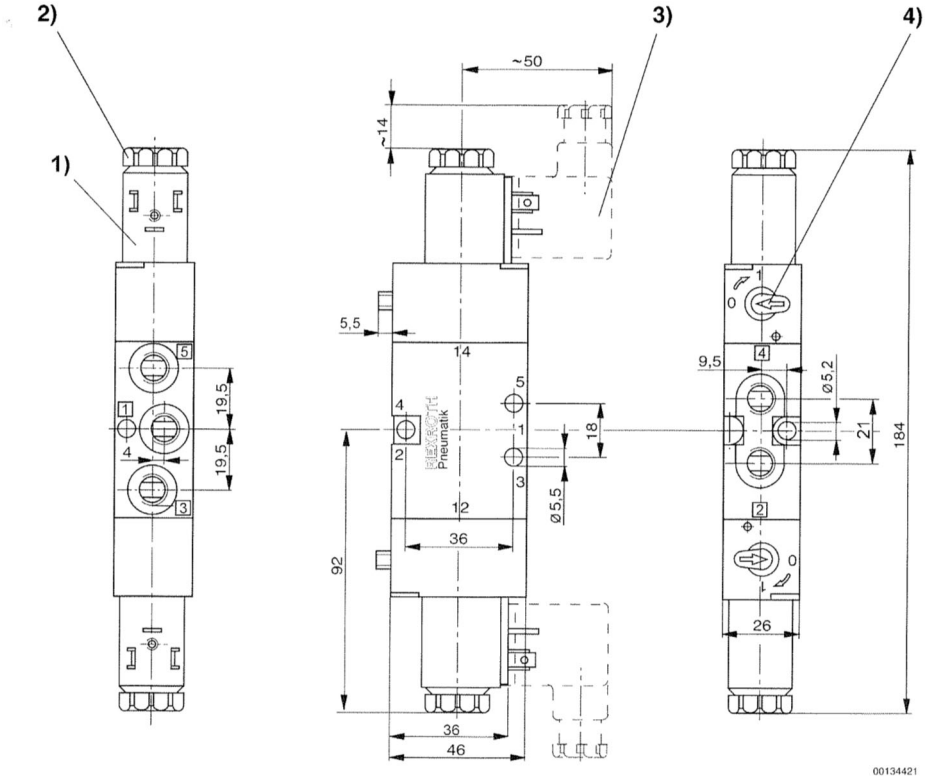

1) Coil can be rotated at 90° internals
2) After removal of cap M5 internal thread M5
3) Electrical connector can be plugged at 180° intervals
4) Manual override

Series CD04 Valves
Electrical accessories - Electrical connector

Electrical connectors, Series CN1
►ISO 6952 ► Electrical connector, form B

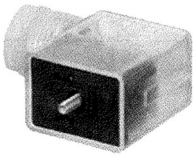

Ambient temperature min./max.	-25°C / +40°C
Protection class according to EN 60529:	IP 65
Cable fitting	M16x1,5
Mounting screw tightening torque	0.4 Nm

	Operating voltage		Max. current	Contact assignment	Cable exit	Protection circuit	Suitable cable-Ø min./max.	Part No.
	DC	AC						
	[V]	[V]	[A]			[mm]		
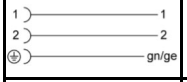	230	230	10	2+E	angled 90°	-	5 / 8	1834484096
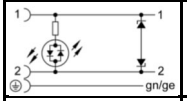	24	24	-	2+E	angled 90°	Z-diode	5 / 8	1834484104
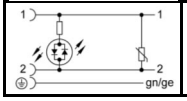	-	110 230	-	2+E	angled 90°	Varistor	5 / 8	1834484105 1834484106

Part No.	Number of plug options 1	LED status display	Housing color	Weight	Note
				[kg]	
1834484096	2 positions each 180°	-	Black	0.02	Fig. 1
1834484104	2 positions each 180°	Yellow	Transparent	0.02	Fig. 2
1834484105 1834484106	2 positions each 180°	Red	Transparent	0.02	Fig. 2

Fig. 1

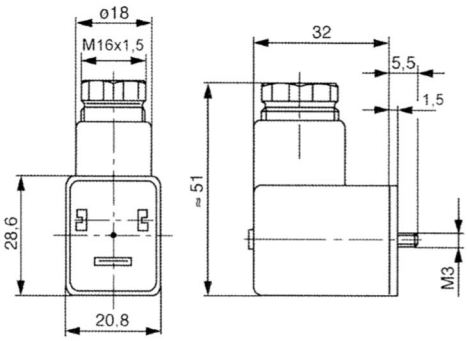

Fig. 2

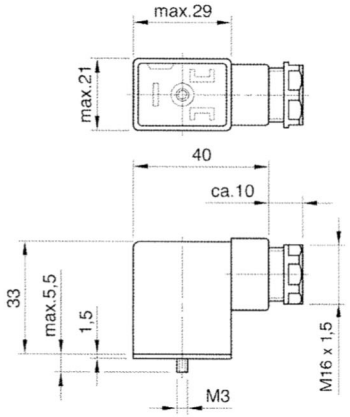

Series CD04 Valves
Electrical accessories - Electrical connector, with cable

Electrical connectors, Series CN1
►ISO 6952 ► Electrical connector, form ► B with cable

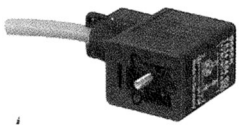

Ambient temperature min./max.	-20°C / +80°C
Protection class according to EN 60529:	IP 67
Cable exit	angled 90°
Tightening torque for mounting screws	0.4 Nm

	Electrical interface	Number of plug options	Operating voltage		Max. current	Protective circuit	Contact assignment	Part No
	[Port 1]	[for port 1]	[V DC]	[V AC]	[A]			
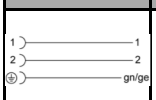	Electrical connector, form B	1 position	230	230	10	-	2+E	1834484148 1834484149 1834484150 1834484151
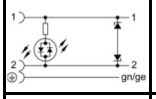	Electrical connector, form B	1 position	24	24	10	Z-diode	2+E	1834484152 1834484153 1834484154 1834484155
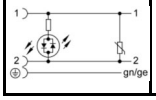	Electrical connector, form B	1 position	230	230	10	Varistor	2+E	1834484156 1834484157 1834484158 1834484159

Part No.	LED status display	Housing color	Cable length	Weight	Note
			[m]	[kg]	
1834484148	-	Black	3	0.2	Fig. 1
1834484149			3	0.2	Fig. 2
1834484150			5	0.31	Fig. 1
1834484151			5	0.31	Fig. 2
1834484152	Yellow	Black	3	0.2	Fig. 3
1834484153			3	0.2	Fig. 4
1834484154			5	0.31	Fig. 3
1834484155			5	0.31	Fig. 4
1834484156	Red	Black	3	0.2	Fig. 3
1834484157			3	0.2	Fig. 4
1834484158			5	0.31	Fig. 3
1834484159			5	0.31	Fig. 4

Fig. 1

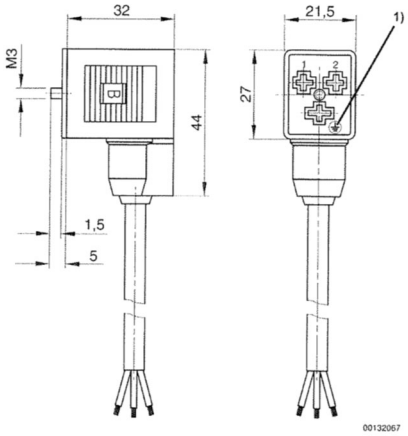

1) 0° female insert

Fig. 2

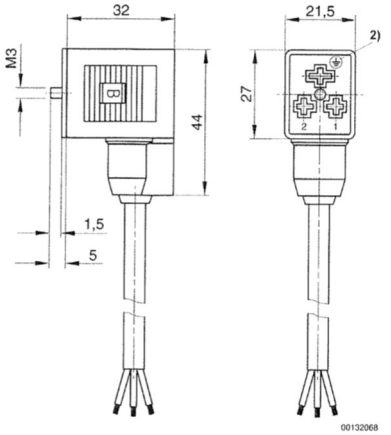

2) 180° female insert

Series CD04 Valves
Electrical accessories

Electrical connectors, Series CN1
►ISO 6952 ► Electrical connector, form ► B with cable

Fig. 3

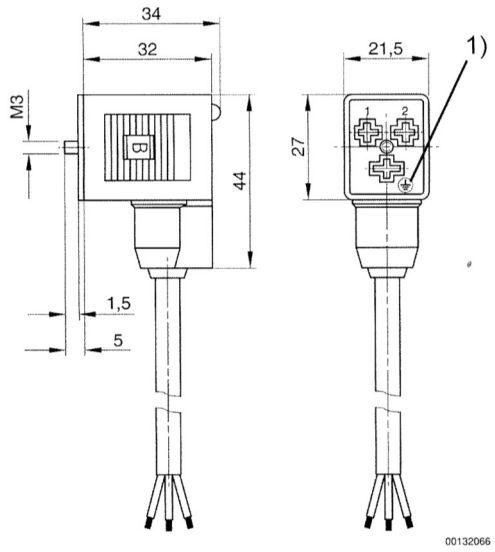

1) 0° female insert

Fig. 4

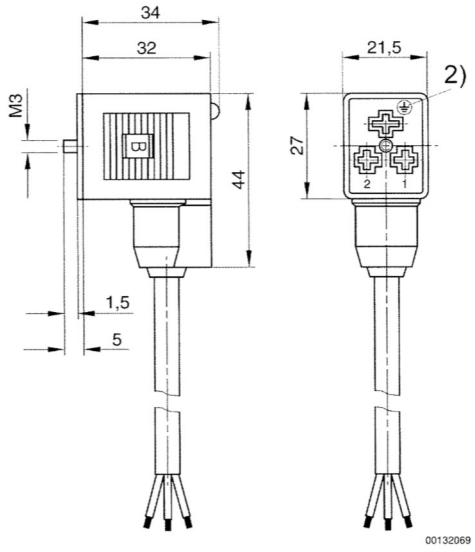

2) 180° female insert

Coil, Series CO1
►Coil width 22 ► mm form B



Connector standard	EN 175301-803, form B
electrical connections	Plug
Ambient temperature min./max.	-- / +50°C
Protection class according to EN 60529:2000, with electrical connector	IP 65
Duty cycle ED	100 %
Materials: Housing	Thermoplastic elastomer

Operating voltage			Voltage tolerance			Power consumption	Switch-on power		Holding power	
DC	AC 50 Hz	AC 60 Hz	DC	AC 50 Hz	AC 60 Hz	DC	AC 50 Hz	AC 60 Hz	AC 50 Hz	AC 60 Hz
						W	VA	VA	VA	VA
110 V	220 V	230 V	-10% / +10%	-10% / +10%	-10% / +10%	4.9	12.6	10.2	9.7	7.9
60 V	110 V	110 V	10% / +10%	-10% / +10%	-10% / +10%	5.9	11	9.4	8.4	6.8
12 V	24 V	24 V	10% / +10%	-10% / +10%	-10% / +10%	5.5	12	9.9	8.9	7.3
48 V	-	-	-10% / +10%	-10% / +10%	-10% / +10%	5	-	-	-	-
24 V	48 V	48 V	-10% / +10%	-10% / +10%	-10% / +10%	4.8	10.5	9.4	7.7	6.2

Series CD04 Valves
Electrical accessories/Silencers

Coil, Series CO1 (cont.)
► **Coil width 22** ► **mm form B**

	Operating voltage			Compatibility index	Weight	Part No.
	DC	AC 50 Hz	AC 60 Hz			
					[kg]	
	110 V 60 V 12 V 48 V 24 V	220 V 110 V 24 V - 48 V	230 V 110 V 24 V - 48 V	14	0.07	1824210235 1824210237 1824210239 1824210241 1824210243

Dimensions

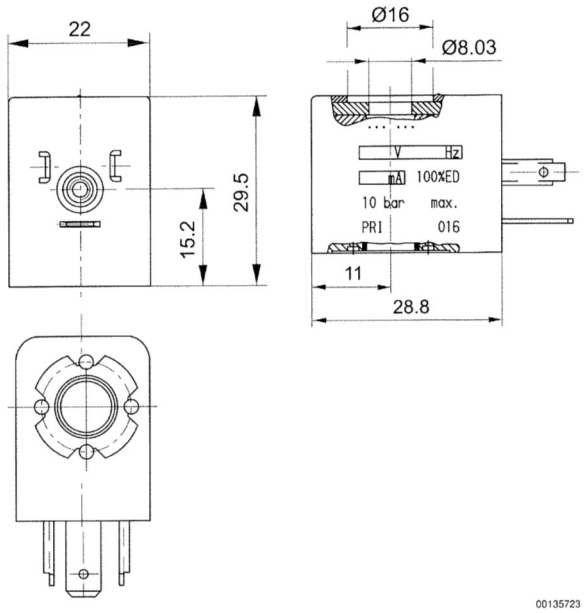

Silencers
► **1/8” NPTF or ISO G 1/8 threads**



Part No.	Threads	Type	Order Multiple*	Length
R432012062	1/8” NPTF	Silencer, metal	1	1.38”
1827000000	G 1/8	Silencer, sintered bronze/brass, series SI1, conical	10	24 mm
1827000031	G 1/8	Silencer, sintered bronze/brass, series SI1, flat	10	11.5 mm
1827430004	G 1/8	Silencer, sintered bronze/brass, series SI1, recessed in port	10	4 mm
1827000019	G 1/8	Silencer, polyethylene, series SI1	5	34 mm

*Due to bag quantity, this is the order multiple per part number.

Series CD04 Valves

3/2-way valve, 0.9 C_V, 1/8” PTF* or G 1/8 ports
Air Pilot



Version	Spool Valve, zero overlap
Sealing principle	soft sealing
Working pressure min./max.	-0.95 bar / 10 bar (-14 psi / 145 psi)
Control pressure min./max.	3.5 bar / 10 bar (51 psi / 145 psi)
Ambient temperature min./max.	-15°C / +50°C (+5°F / +122°F)
Medium temperature min./max.	-15°C / +50°C (+5°F / +122°F)
Medium	Compressed air
Max. particle size	50µm
Oil content of compressed air	0 mg/m^3 - 1 mg/m^3
Compressed air connection	according to ANSI B1.20.3
Material:	
Housing	Die cast zinc; Polyamide, fiber-glass reinforced
Seals	Acrylonitrile Butadiene Rubber

Technical Remarks

- The pressure dew point must be at least 15°C (59°F) under ambient and medium temperature and may not exceed 3°C (37°F).
- The oil content of air pressure must remain constant during the life cycle.
- Use only the approved oil form AVENTICS, see online chapter “Technical information”.

		Compressed air connection				Flow rate value				
		Input	Output	Exhaust	Pilot connection	Qn	Qn 1 ► 2	Qn 2 ► 3	Weight	Part No.
						[l/min]			[kg]	
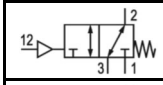	NO/NC	PTF 1/8-27	PTF 1/8-27	PTF 1/8-27	PTF 1/8-27	900	900	900	0.29	R412013298
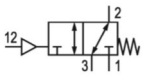	NO/NC	G 1/8	G 1/8	G 1/8	G 1/8	900	900	900	0.29	5710200100

Nominal flow Qn at 6 bar (87 psi) and ∆p = 1 bar (14.5 psi)

Dimensions in inches

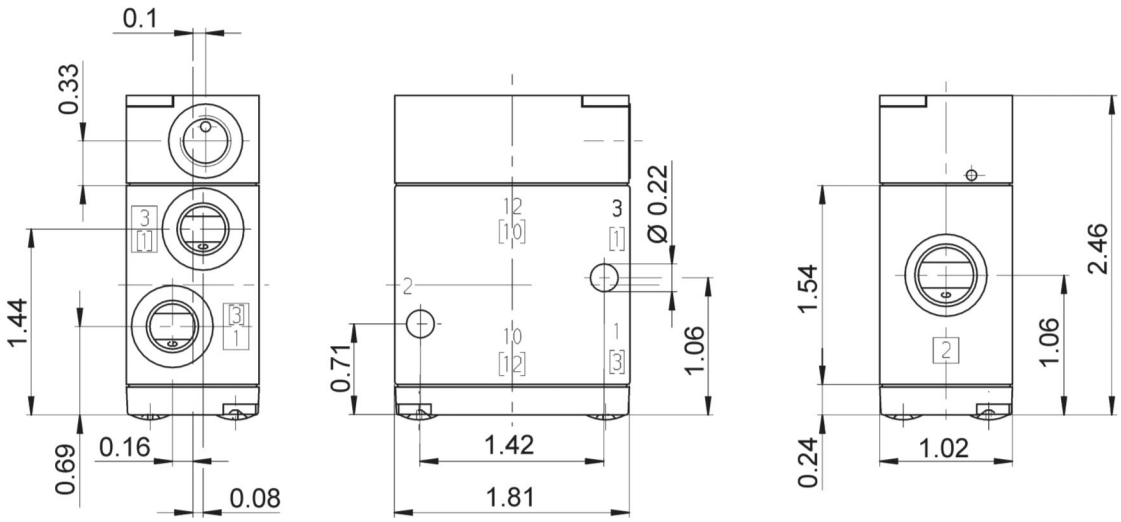

Series CD04 Valves

5/2-way valve, 0.9 C_v, 1/8” PTF* or G 1/8 ports
Single Air Pilot



Version	Spool valve, zero, overlap
Sealing principle	Soft sealing
Mounting on manifold strip	P –strip
Working pressure min./max.	-0.95 bar / 10 bar (-14 psi / 145 psi)
Control pressure min./max.	3.5 bar / 10 bar (51 psi / 145 psi)
Ambient temperature min./max.	-15°C / +50°C (+5°F / +122°F)
Medium temperature min./max.	-15°C / +50°C (+5°F / +122°F)
Medium	Compressed air
Max. particle size	50µm
Oil content of compressed air	0 mg/m^3 - 1 mg/m^3
Compressed air connection	According to ANSI B1.20.3
Materials:	
Housing	Die cast zinc; Polyamide, fiber-glass reinforced
Seals	Acrlonitrile Butadiene Rubber

Technical Remarks

- The pressure dew point must be at least 15°C (59°F) under ambient and medium temperature and may not exceed 3°C (37°F).
- The oil content of air pressure must remain constant during the life cycle.
- Use only the approved oil form AVENTICS, see online chapter “Technical information”.

	Compressed air connection				Flow rate value				
	Input	Output	Exhaust	Pilot connection	Qn	Qn 1 ► 2	Qn 2 ► 3	Weight	Part No.
					[l/min]			[kg]	
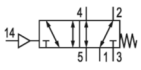	PTF 1/8-27	PTF 1/8-27	PTF 1/8-27	PTF 1/8-27	900	900	900	0.31	R412013299
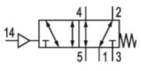	G 1/8	G 1/8	G 1/8	G 1/8	900	900	900	0.31	5710300100

Nominal flow Qn at 6 bar (87 psi) and Δp = 1 bar (14.5 psi)

Dimensions in inches

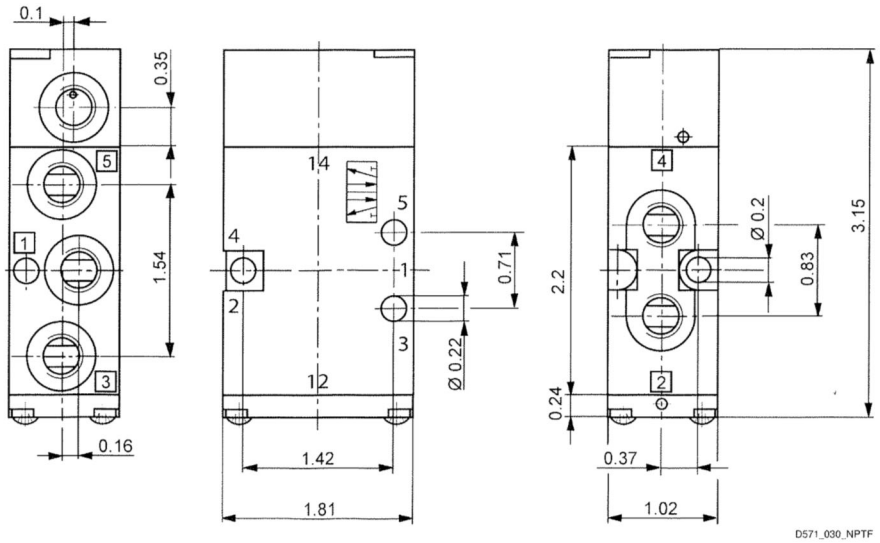

Series CD04 Valves

5/2-way valve, 0.9 C_v, 1/8” PTF* or G 1/8 ports
Double Air Pilot



Version	Spool valve, zero overlap
Sealing principle	soft sealing
Mounting on manifold strip	P-strip
Working pressure min./max.	-0.95 bar / 10 bar (-14 psi / 145 psi)
Control pressure min./max.	2 bar / 10 bar (29 psi / 145 psi)
Ambient temperature min./max.	-15°C / +50°C (+5°F / +122°F)
Medium temperature min./max.	-15°C / +50°C (+5°F / +122°F)
Medium	Compressed air
Max. particle size	50 µm
Oil content of compressed air	0 mg/m^3 - 1 mg/m^3
Compressed air connection	according to ANSI B1.20.3
Materials:	
Housing	Die cast zinc; Polyamide, fiber-glass reinforced
Seals	Acrylonitrile Butadience Rubber

Technical Remarks

- The pressure dew point must be at least 15°C (59°F) under ambient and medium temperature and may not exceed 3°C (37°F).
- The oil content of air pressure must remain constant during the life cycle.
- Use only the approved oil form AVENTICS, see online chapter “Technical information”.

	Compressed air connection				Flow rate value				
	Input	Output	Exhaust	Pilot connection	Qn	Qn 1 ► 2	Qn 2 ► 3	Weight	Part No.
					[l/min]			[kg]	
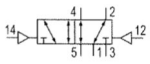	PTF 1/8-27	PTF 1/8-27	PTF 1/8-27	PTF 1/8-27	900	900	900	0.3	R412013300
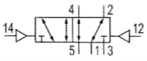	G 1/8	G 1/8	G 1/8	G 1/8	900	900	900	0.3	5710301100

Nominal flow Qn at 6 bar (87 psi) and Δp = 1 bar (14.5 psi)

Dimensions in inches

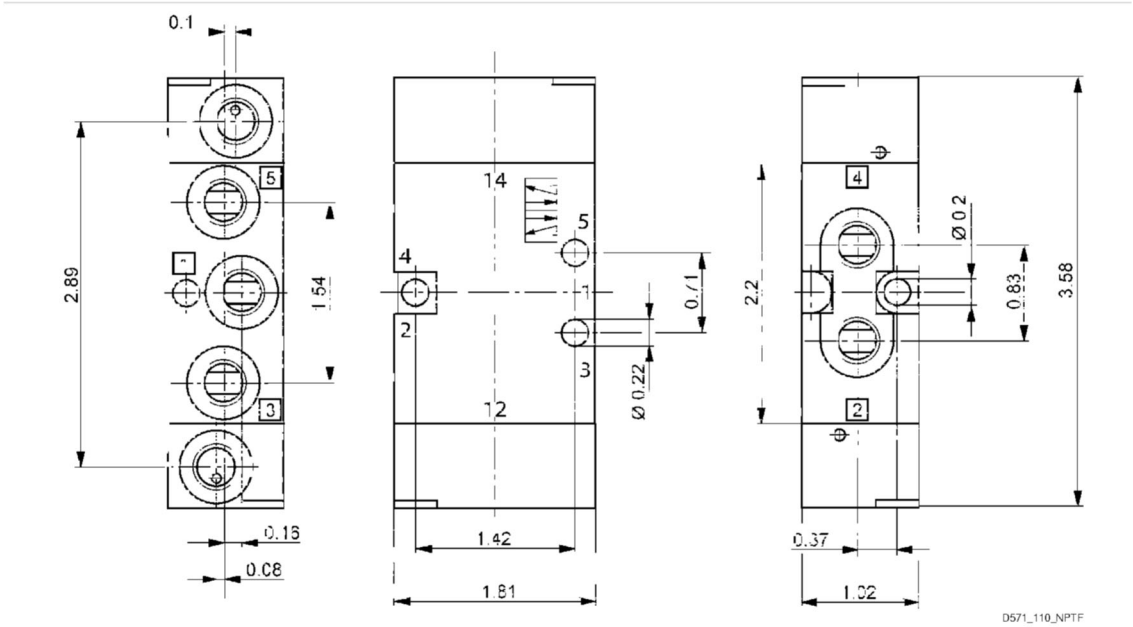

Series CD04 Valves

3/2-way valve, 0.9 C_v, 1/8” PTF* or G 1/8 ports
Mechanically Operated



Version	Spool valve, zero overlap
Sealing principle	soft sealing
Working pressure min./max.	-0.95 bar / 10 bar (-14 psi / 145 psi)
Ambient temperature min./max.	-15°C / +50°C (+5°F / +122°F)
Medium temperature min./max.	-15°C / +50°C (+5°F / +122°F)
Medium	Compressed air
Max. particle size	50 µm
Oil content of compressed air	0 mg/m^3 - 1 mg/m^3
Compressed air connection	according to ANSI B1.20.3
Materials:	
Housing	Die cast zinc; Polyamide, fiber-glass reinforced
Seals	Acrylonitrile Butadience Rubber

Technical Remarks

- The pressure dew point must be at least 15°C (59°F) under ambient and medium temperature and may not exceed 3°C (37°F).
- The oil content of air pressure must remain constant during the life cycle.
- Use only the approved oil form AVENTICS, see online chapter “Technical information”.

Inch (PTF) Ported Versions:

	Control element	Version	Compressed air connection			Qn	Qn 1 ►2	Qn 2 ► 3	Part No.
			Input	Output	Exhaust				
						[l/min]	[l/min]	[l/min]	
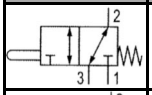	Plunger	NC/NO	PTF 1/8-27	PTF 1/8-27	PTF 1/8-27	900	900	900	R412013026
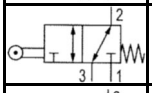	Roller	NC/NO	PTF 1/8-27	PTF 1/8-27	PTF 1/8-27	900	900	900	R412013021 R412013022
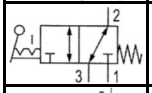	Hand lever, with detent, without detent	NC/NO	PTF 1/8-27	PTF 1/8-27	PTF 1/8-27	900	900	900	R412013025
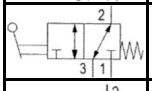	Hand lever	NC/NO	PTF 1/8-27	PTF 1/8-27	PTF 1/8-27	900	900	900	R412013023
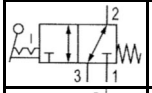	Rotary lever, with detent	NC/NO	PTF 1/8-27	PTF 1/8-27	PTF 1/8-27	900	900	900	R412013024
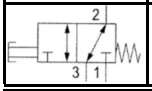	Button	NC/NO	PTF 1/8-27	PTF 1/8-27	PTF 1/8-27	900	900	900	R412013027

Part No.	Operating force Min.	Material: Actuating control	Weight	Note
	[N]		[kg]	
R412013026	60	Stainless steel	0.23	Fig. 1
R412013021 R412013022	30	Polyoxymethylene Stainless steel	0.29	Fig. 2
R412013025	15	Polyoxymethylene	0.32	Fig. 3
R412013023	15	Aluminum	0.29	Fig. 4
R412013024	15	Stainless steel; Plastic	0.5	Fig. 5
R412013027	60	Polyoxymethylene	0.25	Fig. 6

Nominal flow Qn at 6 bar (87 psi) and Δp = 1 bar (14.5 psi)

Series CD04 Valves

3/2-way valve, 0.9 C_V, 1/8" PTF or G 1/8 ports
Mechanically Operated

Metric (ISO G 1/8) Ported Versions:

	Control element	Version	Compressed air connection			Qn	Qn 1 ► 2	Qn 2 ► 3	Part No.
			Input	Output	Exhaust				
						[l/min]	[l/min]	[l/min]	
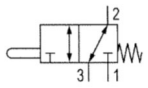	Plunger	NC/NO	G 1/8	G 1/8	G 1/8	900	900	900	5634000100
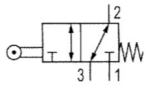	Roller	NC/NO	G 1/8	G 1/8	G 1/8	900	900	900	5634010100 R412008117
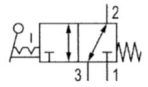	Hand lever, with detent, without detent	NC/NO	G 1/8	G 1/8	G 1/8	900	900	900	5634030100
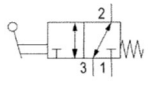	Hand lever	NC/NO	G 1/8	G 1/8	G 1/8	900	900	900	5634040100
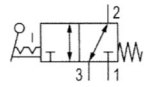	Rotary lever, with detent	NC/NO	G 1/8	G 1/8	G 1/8	900	900	900	5634050100
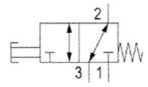	Button	NC/NO	G 1/8	G 1/8	G 1/8	900	900	900	5634060100

Part No.	Operating force Min.	Material: Actuating control	Weight	Note
	[N]		[kg]	
5634000100	60	Stainless steel	0.23	Fig. 1
5634010100 R412008117	30	Polyoxymethylene Stainless steel	0.29	Fig. 2
5634030100	15	Polyoxymethylene	0.32	Fig. 3
5634040100	15	Aluminum	0.29	Fig. 4
5634050100	15	Stainless steel; Plastic	0.5	Fig. 5
5634060100	60	Polyoxymethylene	0.25	Fig. 6

Nominal flow Qn at 6 bar (87 psi) and Δp = 1 bar (14.5 psi)

Dimensions in mm Fig. 1, Basic valve

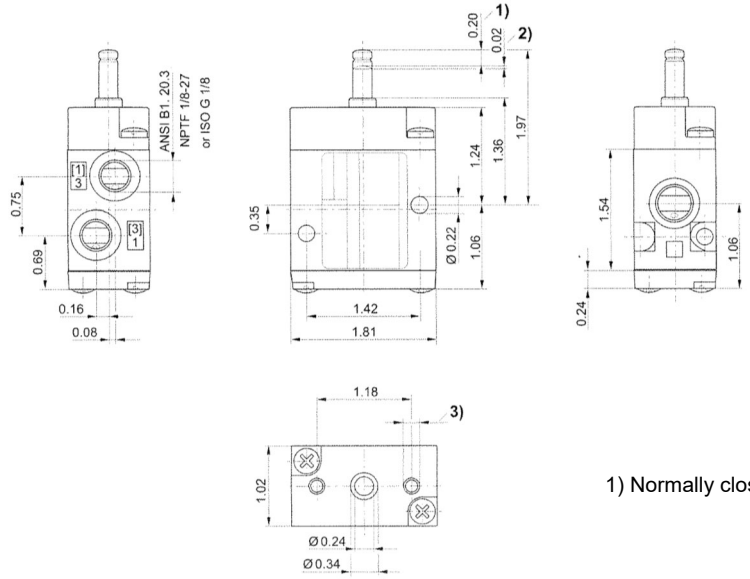

1) Normally closed pos. 2) Open pos. 3) Ø 0.18 - 0.47 mm deep

Series CD04 Valves

3/2-way valve, 0.9 C_v, 1/8” PTF or G 1/8 ports
Mechanically Operated

Dimensions in inches Fig. 2

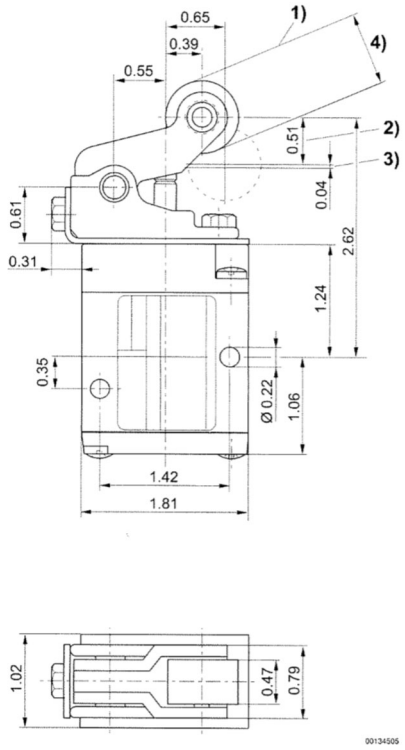

1) Approach angle of rollers max. 30°
2) Normally closed pos.
3) Open pos.
4) POM versions 0.79” dia. / stainless steel versions 0.75” dia.
Dimensions of basic valve apply to all types of actuation.

Dimensions in inches Fig. 3

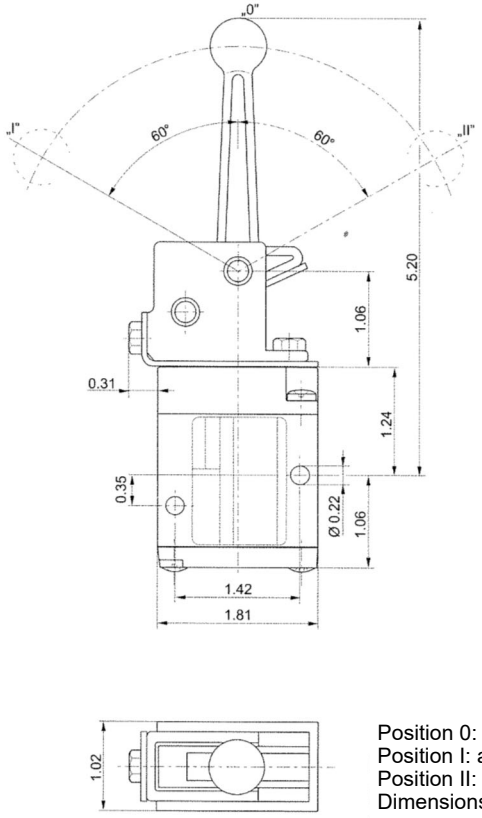

Position 0: initial position
Position I: automatic spring return
Position II: with detent, manual return.
Dimensions of basic valve apply to all types of actuation.

Series CD04 Valves

3/2-way valve, 0.9 C_v, 1/8” PTF or G 1/8 ports
Mechanically Operated

Dimensions in inches **Fig. 4**

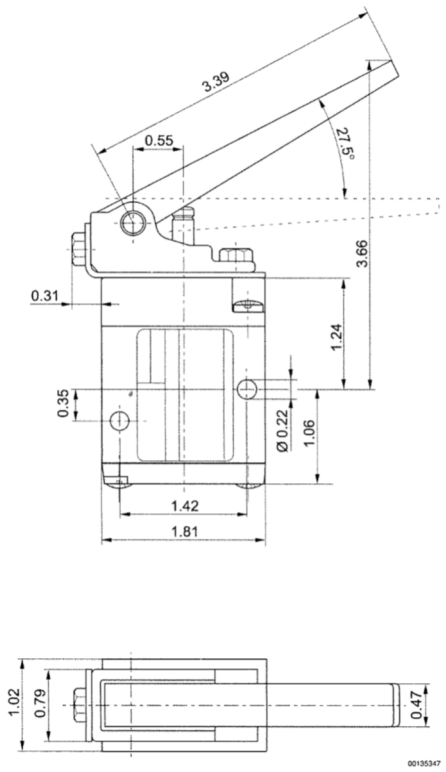

Dimensions of basic valve apply to all types of actuation.

Dimensions in inches **Fig. 5**

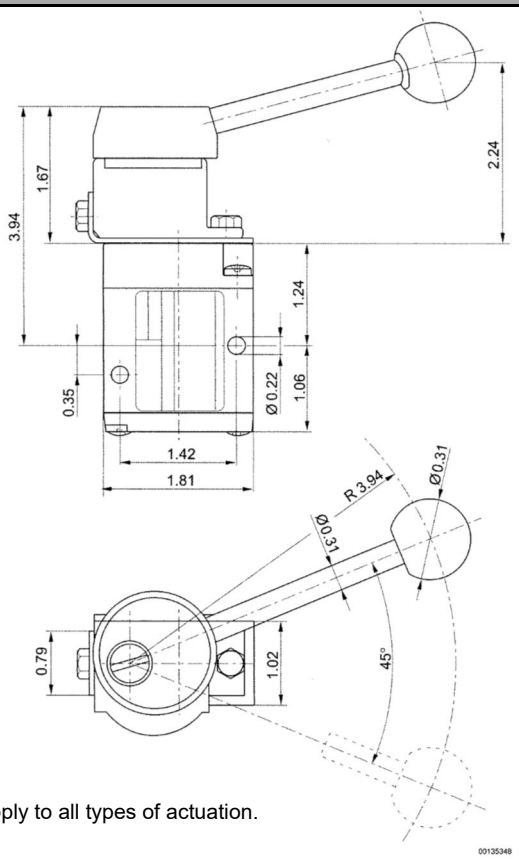

Dimensions of basic valve apply to all types of actuation.

Series CD04 Valves

3/2-way valve, 0.9 C_v, 1/8” PTF or G 1/8 ports
Mechanically Operated

Dimensions in inches **Fig. 6**

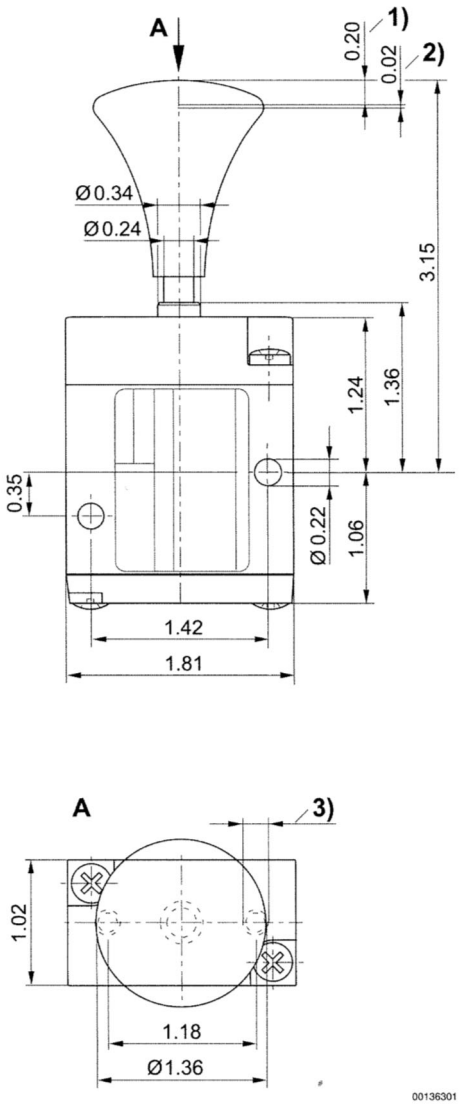

1) Normally closed pos.
2) Open pos.
3) Ø 0.18 - 0.47 in. deep
Dimensions of basic valve apply to all types of actuation.

Series CD04 Valves

5/2-way valve, 0.9 C_v, 1/8” PTF or G 1/8 ports
Mechanically Operated

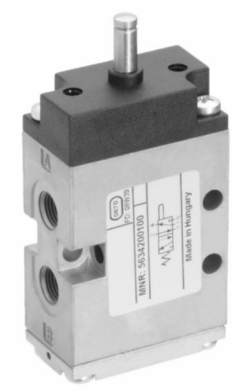

Version	Spool valve, zero overlap
Sealing principle	soft sealing
Working pressure min./max.	-0.95 bar / 10 bar (-14 psi / 145 psi)
Ambient temperature min./max.	-15°C / +50°C (+5°F / +122°F)
Medium temperature min./max.	-15°C / +50°C (+5°F / +122°F)
Medium	Compressed air
Max. particle size	50 µm
Oil content of compressed air	0 mg/m^3 - 1 mg/m^3
Compressed air connection	according to ANSI B1.20.3
Materials:	
Housing	Die cast zinc; Polyamide, fiber-glass reinforced
Seals	Acrylonitrile Butadience Rubber

Technical Remarks

- The pressure dew point must be at least 15°C (59°F) under ambient and medium temperature and may not exceed 3°C (37°F).
- The oil content of air pressure must remain constant during the life cycle.
- Use only the approved oil form AVENTICS, see online chapter “Technical information”.

Inch (PTF) Ported Versions:

	Control element	Compressed air connection			Qn	Qn 1 ► 2	Qn 2 ► 3	Operating force Min.	Part No.
		Input	Output	Exhaust					
					[l/min]	[l/min]	[l/min]	[N]	
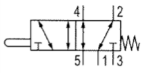	Plunger	PTF 1/8-27	PTF 1/8-27	PTF 1/8-27	900	900	900	70	R412013032
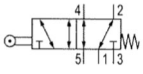	Roller	PTF 1/8-27	PTF 1/8-27	PTF 1/8-27	900	900	900	35	R412013028
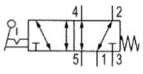	Hand lever, with detent, without detent	PTF 1/8-27	PTF 1/8-27	PTF 1/8-27	900	900	900	15	R412013031
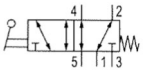	Hand lever	PTF 1/8-27	PTF 1/8-27	PTF 1/8-27	900	900	900	60	R412013029
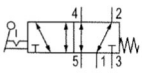	Rotary lever, with detent	PTF 1/8-27	PTF 1/8-27	PTF 1/8-27	900	900	900	20	R412013030
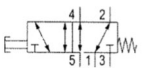	Button	PTF 1/8-27	PTF 1/8-27	PTF 1/8-27	900	900	900	70	R412013033

Part No.	Material: Actuating control	Weight	Note
		[kg]	
R412013032	Stainless steel	0.29	Fig. 1
R412013028	Polyoxymethylene	0.35	Fig. 2
R412013031	Polyoxymethylene	0.38	Fig. 3
R412013029	Aluminum	0.36	Fig. 4
R412013030	Stainless steel; Plastic	0.56	Fig. 5
R412013033	Polyoxymethylene	0.32	Fig. 6

Nominal flow Qn at 6 bar (87 psi) and Δp = 1 bar (14.5 psi)

Series CD04 Valves

5/2-way valve, 0.9 C_V, 1/8" PTF or G 1/8 ports
Mechanically Operated

Metric (ISO G 1/8) Ported Versions:

	Control element	Compressed air connection			Qn	Qn 1 ► 2	Qn 2 ► 3	Operating force Min.	Part No.
		Input	Output	Exhaust					
					[l/min]	[l/min]	[l/min]	[N]	
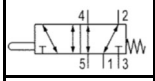	Plunger	G 1/8	G 1/8	G 1/8	900	900	900	70	5634200100
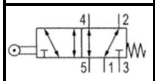	Roller	G 1/8	G 1/8	G 1/8	900	900	900	35	5634210100
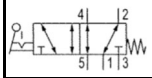	Hand lever, with detent, without detent	G 1/8	G 1/8	G 1/8	900	900	900	15	5634230100
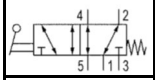	Hand lever	G 1/8	G 1/8	G 1/8	900	900	900	60	5634240100
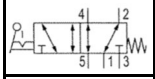	Rotary lever, with detent	G 1/8	G 1/8	G 1/8	900	900	900	20	5634250100
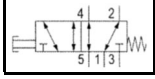	Button	G 1/8	G 1/8	G 1/8	900	900	900	70	5634260100

Part No.	Material: Actuating control	Weight	Note
		[kg]	
5634200100	Stainless steel	0.3	Fig. 1
5634210100	Polyoxymethylene	0.35	Fig. 2
5634230100	Polyoxymethylene	0.38	Fig. 3
5634240100	Aluminum	0.31	Fig. 4
5634250100	Stainless steel; Plastic	0.56	Fig. 5
5634260100	Polyoxymethylene	0.32	Fig. 6

Nominal flow Qn at 6 bar (87 psi) and Δp = 1 bar (14.5 psi)

Dimensions in inches Fig. 1, Basic valve

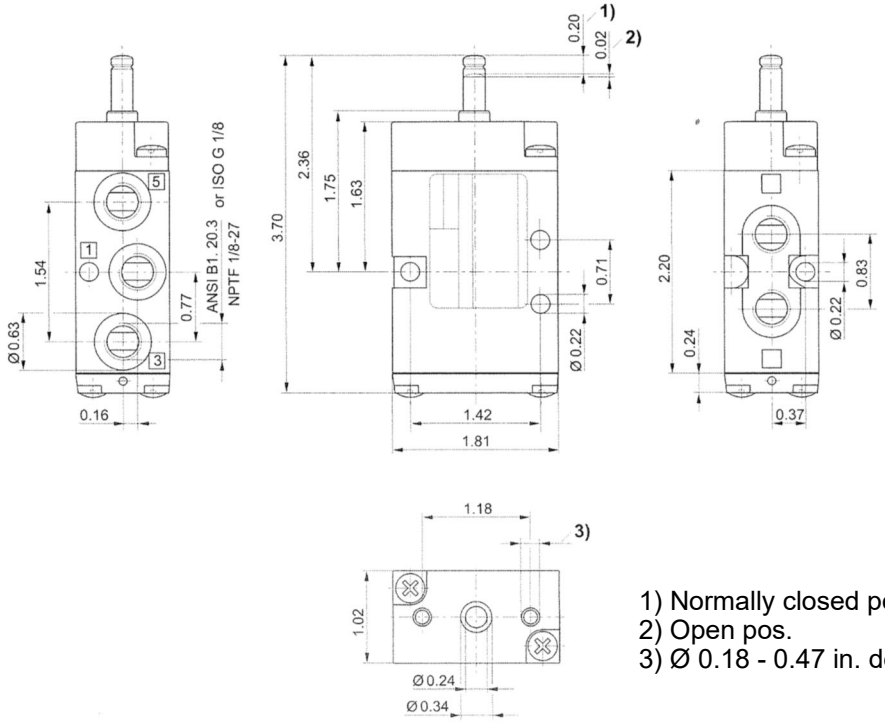

1) Normally closed pos.
2) Open pos.
3) Ø 0.18 - 0.47 in. deep

Series CD04 Valves

5/2-way valve, 0.9 C_v, 1/8” PTF or G 1/8 ports
Mechanically Operated

Dimensions in inches **Fig. 2**

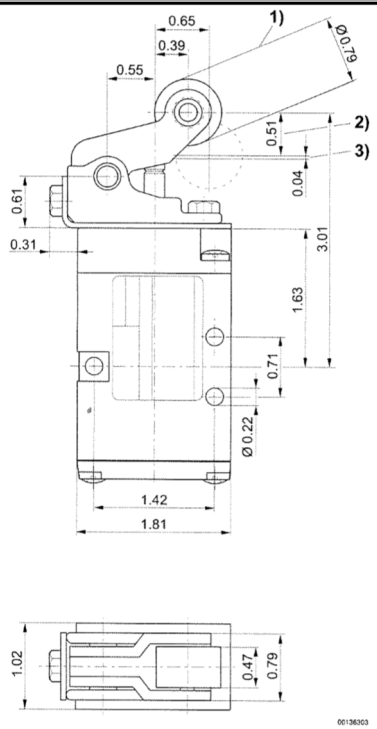

1) Approach angle of rollers max. 30°
2) Normally closed pos.
3) Open pos.
4) POM versions 0.79” dia. / stainless steel versions 0.75” dia.
Dimensions of basic valve apply to all types of actuation.

Dimensions in inches **Fig. 3**

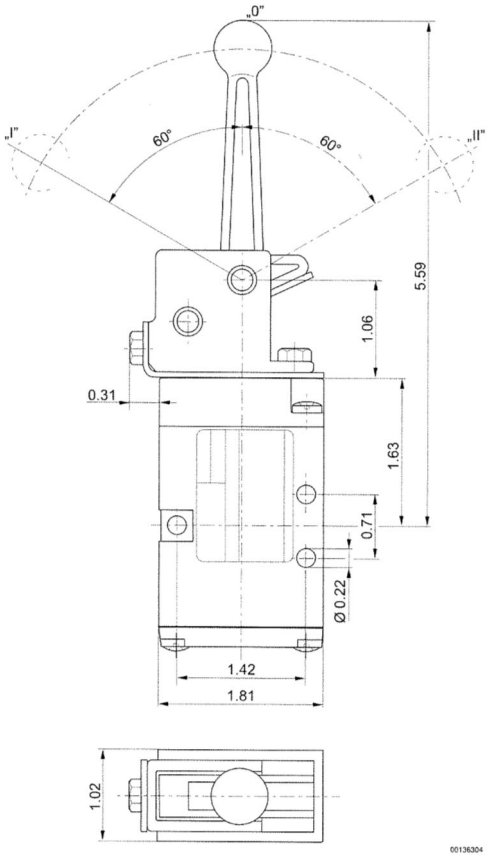

Position 0: initial position
Position I: automatic spring return
Position II: with detent, manual return.
Dimensions of basic valve apply to all types of actuation.

Series CD04 Valves

5/2-way valve, 0.9 C_v, 1/8” PTF or G 1/8 ports
Mechanically Operated

Dimensions in inches **Fig. 4**

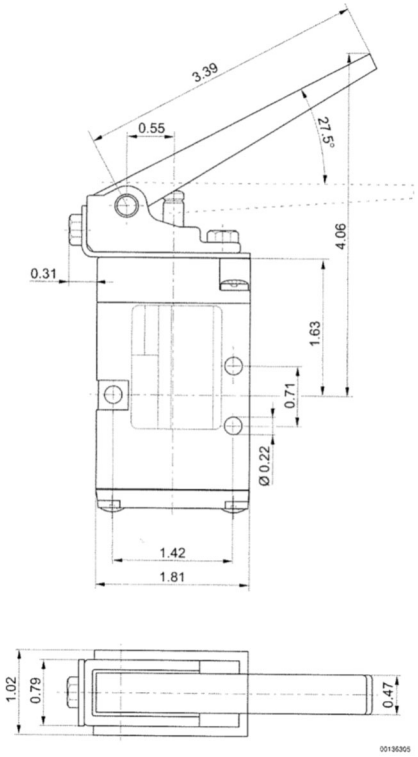

Dimensions of basic valve apply to all types of actuation.

Dimensions in inches **Fig. 5** **Fig. 6**

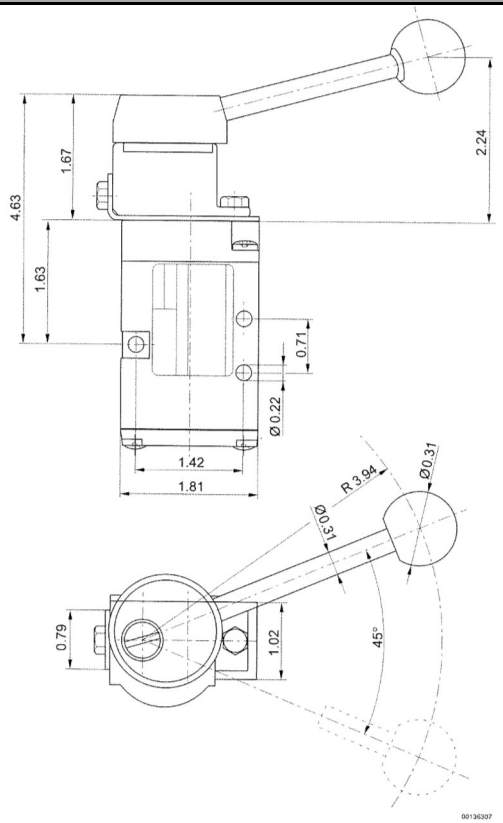

Dimensions of basic valve apply to all types of actuation.

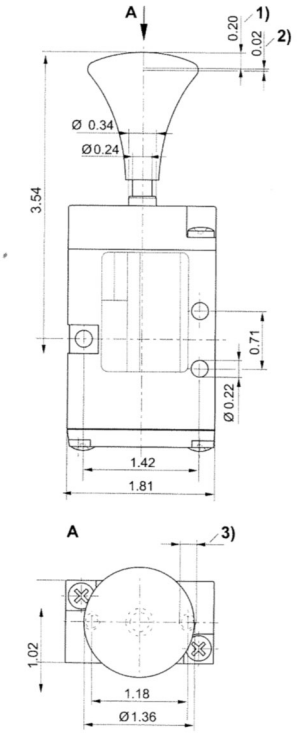

1) Normally closed pos.
2) Open pos.
3) Ø 0.18 - 0.47 in. deep
Dimensions of basic valve apply to all types of actuation.

CD07 Valves, Solenoid and Air Pilot
Specifications and features

4 Way / 2 Position 1/4" NPT
Solenoid & Air Pilot Operated



TECHNICAL DATA:
Port Sizes: 1/4" NPT

Working Pressure: Vacuum service to 150 PSI

Pilot Pressure: 22 PSI minimum - Double Solenoid & Double Air Pilot (2 position models)
45 PSI minimum - Single Solenoid & Single Air Pilot
45 PSI minimum - Double Solenoid & Double Air Pilot (3 position models)
Dual pressure applications acceptable when external pilot supply is used.

Flow: C_v 1.1

Temperature Range: Solenoid Valve +5°F to +120°F
Air Pilot -20°F to + 175°F
Explosion Proof Solenoid: 0° to +150°F

Media: Air (either lubricated or non-lubricated)

Seals: Buna-N

Manual Override: Locking

ELECTRICAL DATA:

Standard Voltage (all coils are rated for continues duty)	Power Consumption	
	Inrush	Holding
110 VAC 50 Hz/120 VAC 60 Hz 24 VAC 50/60 Hz	6.4 VA	3.7 VA
12, 24 VDC	2.7 W	

VOLTAGE TOLERENCE: ±10%
NOTE: Electrical connectors must be ordered separately.
One per solenoid required, see Solenoid Connectors page.

All Standard valves are rated for NEMA 4.
Brad Harrison® coils available - consult factory.

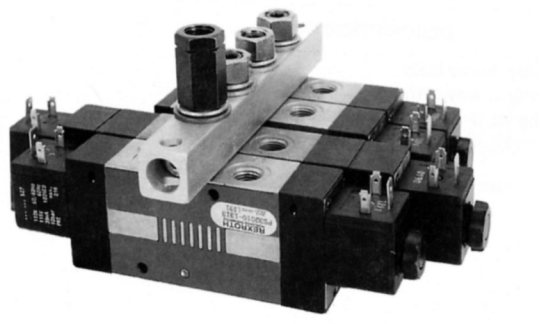

4 bank pressure port with 2 single solenoid valves and 2 double solenoid valves.

FEATURES

- **The 1/4" 4-way, 5-ported CD07 Valve is an extremely versatile, yet compact, design.** This low-profile spool type design will not only enhance the appearance of your equipment, but will save valuable engineering space. A new simplified internal design allows for consistently reliable performance and ease of operation.
- **The CD07 Valve is available with a wide range of solenoid, air pilot and mechanical operators.** This new design allows each valve body to be readily STACKED through a convenient and simplified single pressure port bar. Unique optional solenoid connectors offer neon indicator lights for (AC) circuits and L.E.D. displays for (DC) circuits.
- **Standard Plug-In DIN Connection**
  "Low wattage" (2.1W) solenoid and connector, available with or without built-in indicator light.
- **External Pilot:** (not shown) Allows an independent air supply to be connected to the pilot port of the solenoid operator.
- **Manual Locking Overrides**: Allow supplementary manual control and permit operating the valve when the electric power is off.
- **Solenoid Coil Removal**: Un-screw coil retaining nut and slip off the coil.
- **Seal Spacers**: New lightweight acetal cartridge assembly.
- **Manifold System**: Common pressure port bar

CD07 Valves, Solenoid and Air Pilot
Single and double solenoid, 5/2

4 Way / 2 Position 1/4” NPT
Solenoid & Air Pilot Operated

NOTE: All dimensions expressed in $\frac{IN}{MM}$

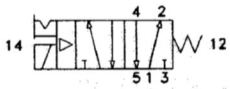

SINGLE SOLENOID
PLUG-IN (DIN) CONNECTION

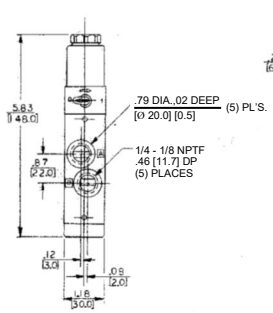

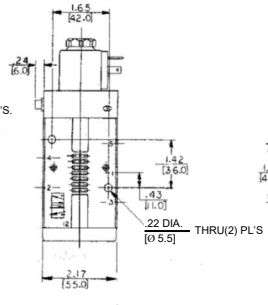

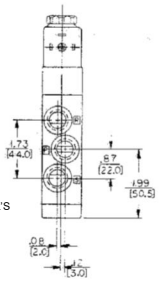

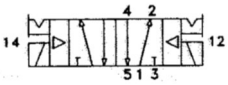

DOUBLE SOLENOID
PLUG-IN (DIN) CONNECTION

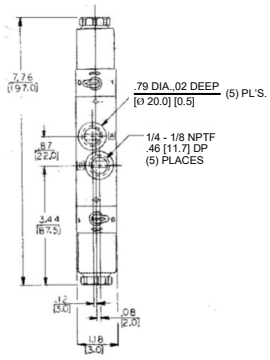

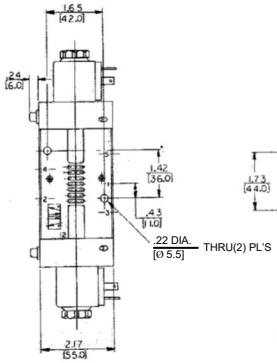

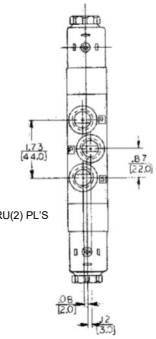

Single Solenoid 4-Way, 2 Position (less connector)			Double Solenoid 4-Way, 2 Position (less connector)		
Part Number	**Old Part No.**	**Description**	**Part Number**	**Old Part No.**	**Description**
*Internal Pilot:			*Internal Pilot:		
R432016582	PS-031010-01355	110V-50Hz/120V-60Hz	R432016587	PS-032010-01313	110V-50Hz/120V-60Hz
R432016583	PS-031010-01655	220V-50Hz/240V-60Hz	R432016589	PS-032010-01616	220V-50Hz/240V-60Hz
R432016585	PS-031010-07255	12 VDC	R432016593	PS-032010-07272	12 VDC
R432016584	PS-031010-06955	24 VDC	R432016591	PS-032010-06969	24 VDC
R432016586	PS-031010-07855	24 VAC-50/60Hz	R432016595	PS-032010-07878	24 VAC-50/60Hz
External Pilot:			External Pilot:		
R432016605	PS-034010-01355	110V-50Hz/120V-60Hz	R432016604	PS-034010-01313	110V-50Hz/120V-60Hz
R432016609	PS-034010-01655	220V-50Hz/240V-60Hz	R432016608	PS-034010-01616	220V-50Hz/240V-60Hz
R432016615	PS-034010-07255	12 VDC	R432016616	PS-034010-07272	12 VDC
R432016613	PS-034010-06955	24 VDC		PS-034010-06969	24 VDC
R432016618	PS-034010-07855	24 VAC-50/60Hz		PS-034010-07878	24 VAC-50/60Hz

*For all applications when supply pressure is 45 psi or higher. Use external pilot version if supply pressure is under 45 psi (including vacuum or dual pressure applications). Take care to note which version is required before ordering since internal/external conversion is not field convertible.

CD07 Valves, Solenoid and Air Pilot

Explosion proof and air pilot models

4 Way / 2 Position 1/4” NPT Explosion Proof Solenoid Valves for Hazardous Locations

CSA:
Class I, Zone 1, Ex m II T4
Class I, Div. 1, Gr. A, B, C and D
Class II, GR. E, F and G, Class III; T4

FM:
Class I, Zone 1, Aex m II T4
Class I, Div. 1, Gr. A, B, C and D
Class II, GR. E, F and G, Class III; T4

Model	Part No.	Coil Voltage
Single Solenoid	R432032544	120 VAC 50/60 Hz
Single Solenoid	R432032545	240 VAC 50/60 Hz
Double Solenoid	R432032546	120 VAC 50/60 Hz

4 Way / 2 Position 1/4” NPT Air Pilot Operated Valves

Single Air Pilot:
Part Number R432016611
(Old Part No. PS-034010-03355)

Double Air Pilot:
Part Number R432016610
(Old Part No. PS-034010-03333)

4-Way/3 Position, 1/4" NPT Double Solenoid and Air Pilot Operated



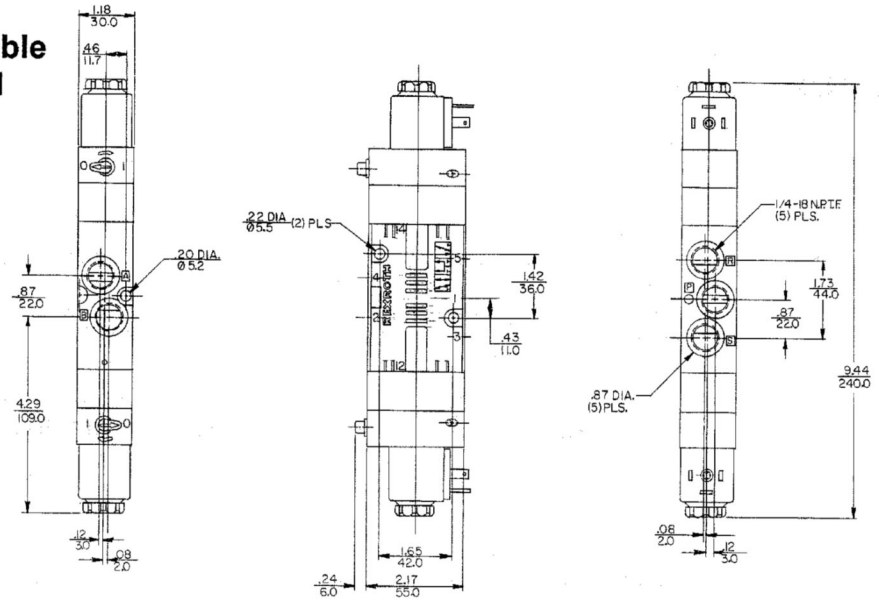

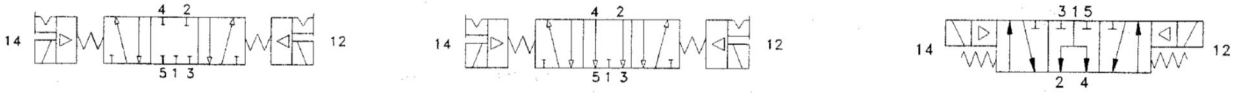

Double Sol., 3 Pos.	Closed Center		Exhaust Center		Supply Center	
Coil Voltage	**Part No.**	**Old Part No.**	**Part No.**	**Old Part No.**	**Part No.**	**Old Part No.**
110V-50Hz/120V-60Hz	R432016588	PS-032010-01515	R432016597	PS-032020-01515	R432016601	PS-032030-01515
220V-50Hz/240V-60Hz	R432016590	PS-032010-01818		PS-032020-01818		PS-032030-01818
12 VDC	R432016594	PS-032010-07474	R432016599	PS-032020-07474	R432030384	PS-032030-07474
24 VDC	R432016592	PS-032010-07171	R432016598	PS-032020-07171	R432016602	PS-032030-07171
24 VAC-50/60Hz	R432016596	PS-032010-07979	R432016600	PS-032020-07979	R432016603	PS-032030-07979



Air Pilot Model	Part No.	Old Part No.
Closed Center	R432016612	PS-034010-03535
Exh. Open Ctr.	R432016619	PS-034020-03535
Supply Open Ctr.	R432016620	PS-034030-03535

CD07 Valves, Solenoid and Air Pilot

Repair kits and parts

BODY REPAIR KIT

(Includes all rubber parts, 2 cartridges and 2 pilot piston assemblies)

Part No.	Old Part No.	Description
R432008496	P -026235-00000	PS3…Series

BODY REPAIR KIT

(Includes all rubber parts and 2 cartridges)

Part No.	Old Part No.	Description
R432013712	P -067189-K0000	PS2Series (Obs. STACKMASTER)

SOLENOID PILOT OPERATOR KIT

(One per solenoid required)

Part No.	Old Part No.	Description
R432008497	P -026236-00000	Internal Pilot
R432008657	P -026628-00000	External Pilot

SOLENOID PLUNGER REPAIR KIT

(Includes armature, plunger/spring and seal)

Part No.	Old Part No.	Description
R432015687	P -069541-00000	PS3…Series Standard Models

SOLENOID KITS

(Includes Complete Solenoid Operator and Coil)

INTERNAL PILOT		
Part No.	**Old Part No.**	**Description**
R432008498	P -026240-00000	110V-50Hz/120V-60Hz
R432008499	P -026241-00000	220V-50Hz/240V-60Hz
R432008500	P -026242-00000	24 VAC 50/60Hz
R432008501	P -026243-00000	12 VDC
R432008502	P -026244-00000	24 VDC

SOLENOID COILS

For Standard CD07 Valves

Part Number	Old Part Number	Voltage
R432011985	P -048835-00001	110V-50Hz/120V-60Hz
R432011986	P -048835-00002	220V-50Hz/240V-60Hz
R432011990	P -048835-00006	24 VAC 50/60Hz
R432011988	P -048835-00004	12 VDC
R432011989	P -048835-00005	24 VDC

For Explosion Proof CD07 Valves

Part Number	Old Part Number	Voltage
R432013760	P -067370-00000	110V-50Hz/120V-60Hz
R432013761	P -067371-00000	220V-50Hz/240V-60Hz
n/a	P -067373-00000	24 VAC 50/60Hz *
n/a	P -067373-00000	12 VDC *
R432013763	P -067374-00000	24 VDC

* 12VDC is dual rated for 24VAC and 60Hz service.

With these repair kits, the elastomer seals and some common wear parts on the component are renewed. On severely worn or damaged valves, additional parts may be required. For additional parts, information and service instructions, refer to Service Bulletin SM-300.30.

CD07 Valves, Solenoid and Air Pilot

Pressure port manifold bar

1/4” NPT Pressure Port Bar Manifold System for CD07 Valves

Will accommodate a mixture of all types of CD07 valves and operators. However, the Rotary Lever, Plain Knob and Explosion Proof operators may not have operating clearance.

How to Order: Select the valves or combination of CD07 valves. Then select the number of stations by the part number listed below:

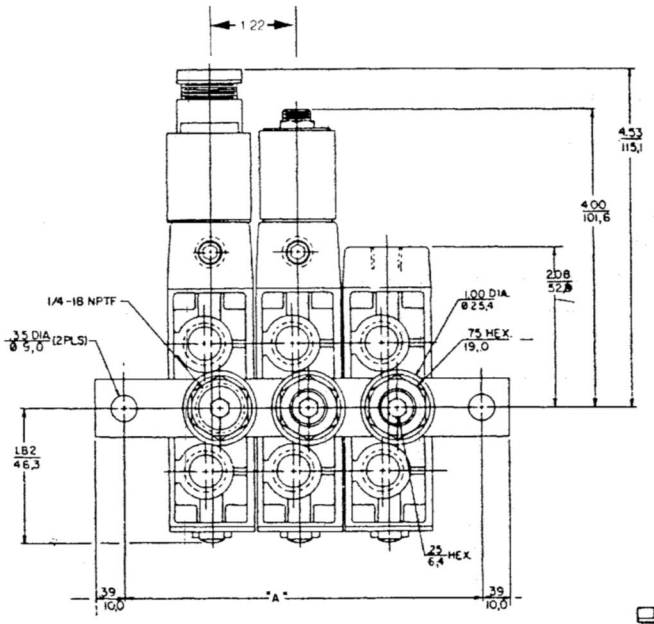

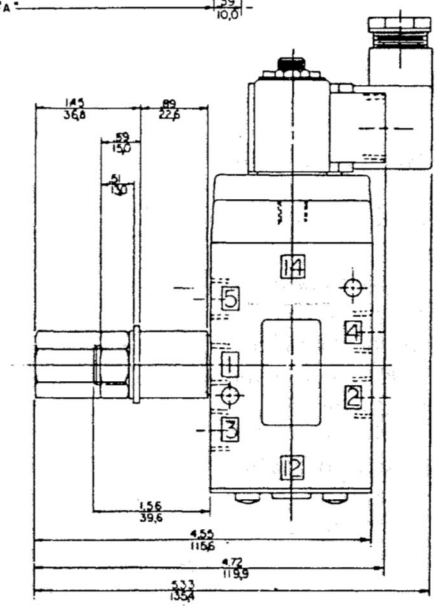

No. of Stations	Part No.	Old Part No.	“A” IN/mm
2	R432015553	P -069258-00002	3.62/92.0
3	R432015554	P -069258-00003	4.84/123.0
4	R432015555	P -069258-00004	6.06/154.0
5	R432015556	P -069258-00005	7.28/185.0
6	R432015557	P -069258-00006	8.50/216.0
7	R432015558	P -069258-00007	9.72/247.0
8	R432015559	P -069258-00008	10.94/278.0

CD07 Valves, Manual & Mechanical Operators

Specifications, features, pedal and rotary lever operators

NOTE: All dimensions expressed in $\frac{IN}{MM}$

4 Way / 2 Position 1/4” NPT
Manual and Mechanical Operators



TECHNICAL DATA:

Port Sizes: 1/4 NPT

Working Pressure: Vacuum service to 150 psi
Can be used for dual pressure applications

Flow: C_v = 1.1

Temperature Range: -20° to +175°F

Media: Air (Lubricated or non-lubricated)

Materials: Body: Zinc die casting
Spools: Stainless Steel

FEATURES:

- The 1/4” 4-way, 5-ported CD07 valve is an extremely versatile, yet compact design. This low profile spool type design will not only enhance the appearance of your equipment, but will save valuable engineering space
- A simplified internal design allows for consistently reliable performance and ease of operation

Pedal (2 position), Spring Return

Part Number R432016624
(Old Part No. PS-034040-02255)

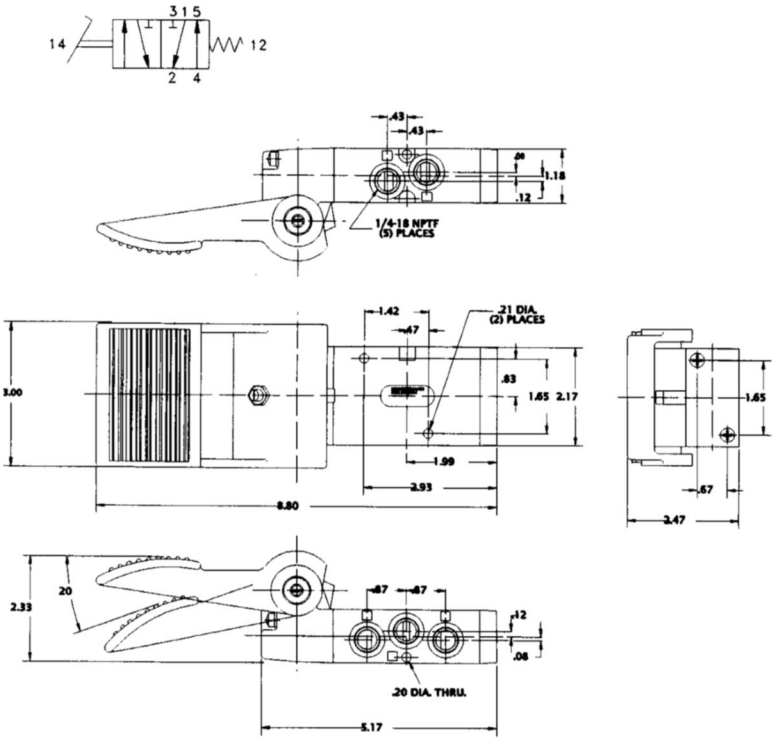

Plunger (2-Position, Spring Return)
Part No. R432016625
(Old Part No. PS-034040-05155)

CD07 Valves, Manual & Mechanical Operators
Roller, one-way trip, toggle, paddle and plunger operators

NOTE: All dimensions expressed in $\frac{IN}{MM}$

4 Way / 2 Position 1/4” NPT
Manual and Mechanical Operators

Roller
(2-Position, Spring Return)

Part Number R432016623
(Old Part No.
PS-034040-00855)

Toggle (2-Position, Spring Return or Detented)
Part Number R432016626
(Old Part No.
PS-034040-05855)
60° Travel-Spring Rtn.
57° Travel-Detented

Paddle (2-Position, Spring Return)
Part Number R432016621
(Old Part No.
PS-034040-00255)

CD07 Valves, Manual & Mechanical Operators

Knob and treadle operators

Knob (2-Position)
Detented
Part Number
R432032606
(Old Part No.
R432016557)

Knob (2-Position)
w/o Spring Return
Part Number
R432032607
(Old Part No.
R432016553)

Knob (2-Position)
with Spring Return
Part No. R432016622
(Old Part No.
PS-034040-00555)

For Air Pilot return, order Part Number
R432009214 (Old Part No. P-029992-00000)

CD07 Valves, Manual & Mechanical Operators
Operator Kits

MANUAL/MECHANICAL AIR PILOT OPERATOR PORTIONS

PART NUMBER	OLD PART NUMBER	OPERATOR KITS
R432016570	PS-030000-K0002	Paddle, w/Return Spring
R432030377	PS-020000-K0004	Knob, Less Return Spring
R432030362	PS-020000-K0005	Knob, w/Return Spring
R432016571	PS-030000-K0005	Knob, w/Return Spring
R432016572	PS-030000-K0008	Roller, w/Return Spring
R432016494	PS-020000-K0022	Pedal, w/Return Spring
R432030379	PS-020000-K0033	Air Pilot Less Return Spring

PART NUMBER	OLD PART NUMBER	OPERATOR KITS
R432016578	PS-030000-00033	Air Pilot Less Return Spring
R432030357	PS-020000-K0051	Plunger, w/Return Spring
R432030383	PS-030000-K0051	Plunger, w/Return Spring
R432016495	PS-020000-K0052	Treadle, w/Return Spring
R432030391	PS-020000-K0055	End Cover w/Return Spring
R432030381	PS-020000-K0056	End Cover, Less Return Spring
R432016573	PS-030000-K0058	Toggle, w/Return Spring

Operator Kits include all Operator Portions, Springs, Spacers, Plates, O-Rings, Mounting Screws & Angle Plates necessary in mounting the Operator Portion to the Main Valve Body.

PS2…Series valves use PS20000-…kits.
PS3…Series valves use PS30000-…kits.

TaskMaster® Valve, 4-Way Directional Control

Technical data and features

4 Way / 2 & 3 Position 1/4” & 3/8” NPTF Solenoid, Air Pilot & Lever Operated

TECHNICAL DATA:

Port Sizes: 1/4” & 3/8” NPTF



Working Pressure: Valve inlet: 200 psi (13.8 bar) maximum with external pilot
150 psi (10.3 bar) maximum with internal pilot

Minimum Pilot Pressure: 2 position: 15 psi (1 bar)
Spring return models: 25 psi (1.7 bar)

Flow: C_v 1.0 (1000 Nl/min)

Temperature Range: -20°F to +160°F (-29°C to 71°C)

Media: Air and inert gases (In service higher than 18 cycles per minute or with continuous air flow, a lubricator is recommended.)

Materials: Body, subplate and operators: Die cast anodized aluminum
Spool: Machined from high-tensile anodized aluminum
Seals: Buna-N specially treated

Manual Override: Non-Locking

ELECTRICAL DATA:

Standard Voltage (all coils are rated for continues duty)	Power Consumption	
	Inrush	Holding
24, 120, 240 VAC 60 Hz	33 VA	22 VA
12, 24 VDC	12 W	

Molded Coil: Standard

Lead Length: 24”

Approximate Weights:

Single Solenoid	2.63 lbs. (1.19 kg)
Double Solenoid	3.38 lbs. (1.53 kg)
3-Position Double Solenoid	3.88 lbs. (1.76 kg)
Single Air Pilot	2.13 lbs. (0.97 kg)
Double Air Pilot	2.13 lbs. (0.97 kg)
3-Position Double Air Pilot	2.63 lbs. (1.19 kg)
2-Position Lever	2.50 lbs. (1.13 kg)
3-Position Lever	2.38 lbs. (1.08 kg)



Features:

- **Subbase mounted** four-way valves for two and three position (spring centered) closed center operation and a selection of three operators.
- **Three-way function** can be obtained by plugging one delivery port to provide either normally open or closed operation.
- **Unique subbase** is designed to be mounted to the customer’s equipment with only two mounting bolts, which saves labor and material during installation.
- **Separate tapped exhaust ports,** in the subbase, for each delivery port allow exhaust air to be piped away for safety or noise reduction purposes and permit use of exhaust restrictors for cylinder speed control.
- **Minimum number of wearing parts.** Lessens the chance of equipment downtime and reduces the cost of repair.
- **Low pilot pressure.** A low (15 psi without springs—25 psi with springs) pilot pressure rating assures reliable operation. Fluctuating line pressures within the plant do not affect operation.
- **Continuous-duty solenoid.** Won’t burn out...even when energized for extended periods. Pilot operated for fast response. Non-locking manual override is standard.
- **Lightweight aluminum spool.** Aluminum spool is precision finished for faster response and optimum dependability.
- **Low friction spool bore.** Bore is roller burnished for lower spool friction and longer seal life.
- **No-leak seals.** Specially treated Buna-N seals assure low friction and long wear without leakage.
- **Easier maintenance.** Simplified design offers quick access for maintenance through 3-bolt valve portion mounting and easy end cover removal.
- **U.L. listed.**

TaskMaster® Valve, 4-Way Directional Control

Solenoid operated models, 2 & 3 Position, 1/4” & 3/8” NPTF

Solenoid Operated, 2 Position Subbase Mounted Single or Double Solenoid Operated

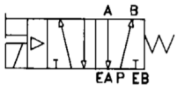

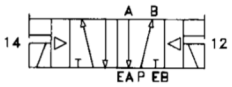

Port Size (120VAC version) See Coil Voltages Note	Single Solenoid		Double Solenoid	
	Internal	External	Internal	External
With 1/4” subbase	R431008475 (PJ-022711-00000)	R431008471 (PJ-021711-00000)	R431008479 (PJ-022771-00000)	R431008474 (PJ-021771-00000)
With 3/8” subbase	R431008491 (PJ-032711-00000)	R431008488 (PJ-031711-00000)	R431008495 (PJ-032771-00000)	R431008490 (PJ-031771-00000)
Valve less subbase	R431008459 (PJ-012711-00000)	R431008456 (PJ-011711-00000)	R431008462 (PJ-012771-00000)	R431009192 (PJ-011771-00000)

Model code (and old part number) shown in parenthesis.

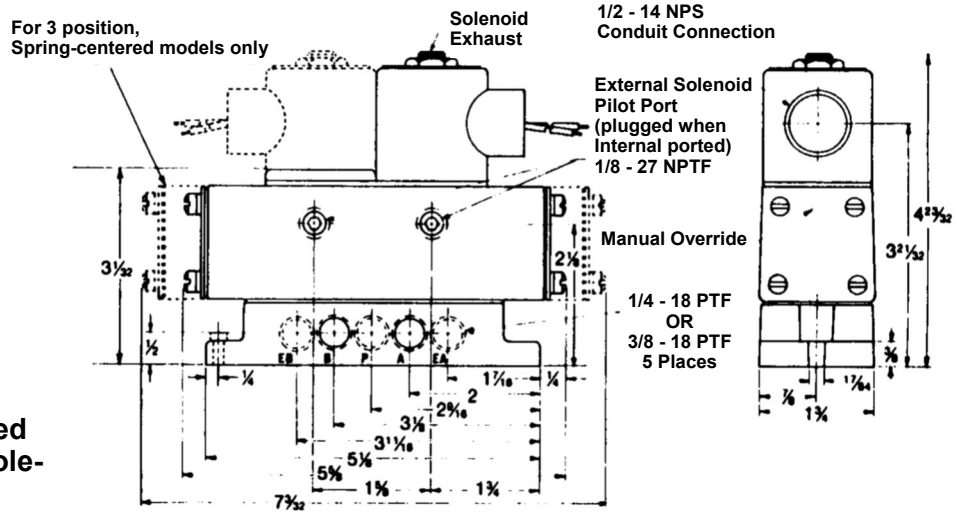

3 Position Subbase Mounted Spring-Centered Double Solenoid

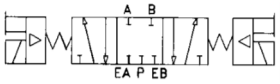

Port Size	Part No.	Model No.
With 1/4” subbase	R431008482	PJ-025771-00000
With 3/8” subbase	R431008499	PJ-035771-00000
Less subbase	R431008466	PJ-015771-00000

Explosion Proof Valves

Port Size	Part No.	Model No.
1/4” - 120VAC, like PJ22711	R431005866	P -061772-00000
1/4” - 120VAC, like PJ12711	R431009194	P -060887-K0000
1/4” - 24VDC, like PJ12715	R431005602	P -060887-00004

Coil Voltages:

The coil voltage of a solenoid operator is identified by the last digit of the valve model code. The last digit of all solenoid valve model codes listed identifies a 120VAC, 60 Hz coil. Solenoid valves with other ratings may be ordered by using the table at right and substituting the appropriate digit in the model code (not part number beginning with R).

Other Notes:
Solenoid pilot pressure must be a minimum of 25 psi with return springs, 15 psi less return springs and a maximum of 150 psi. A flush, non-locking manual override is standard for manual operation when the electric power is off. Other optional features are available upon request such as high pressure (200 psi) solenoids.

Coil Voltages		*Last Digit in Model Code
**Primary	**Secondary	
120VAC, 60 Hz	38VDC	1
240VAC, 60 Hz	70VDC	2
480VAC, 60 Hz	145VDC	3
12VDC	42VAC, 60 Hz	4
24VDC	86VAC, 60Hz	5

*See valve model codes. (Does not apply to Hopper Dump Valve version P –060681-00001 or explosion proof models.)
**Primary and secondary voltages will be stenciled on the solenoid data plate.

TaskMaster® Valve, 4-Way Directional Control

Air pilot and lever operated models

2 Position Subbase Mounted
Single or Double Air Pilot Operated

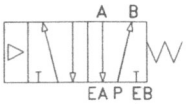

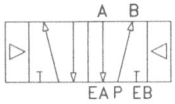

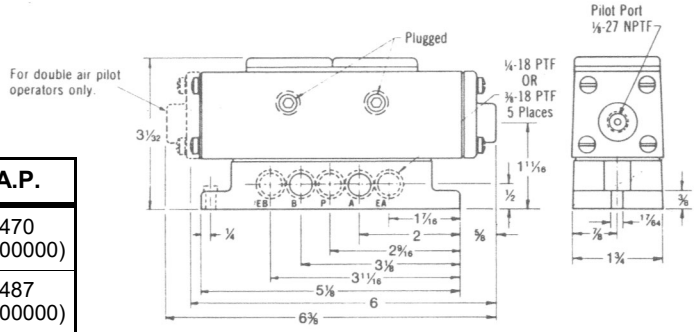

Port Size	Single A.P.	Double A.P.
With 1/4” subbase	R431008469 (PJ-021610-00000)	R431008470 (PJ-021660-00000)
With 3/8” subbase	R431008486 (PJ-031610-00000)	R431008487 (PJ-031660-00000)
Less subbase	R431008454 (PJ-011610-00000)	PJ-015771-00000 (PJ-011660-00000)

Model code (and old part number) shown in parenthesis.

2 and 3 Position Subbase Mounted
Lever Operated



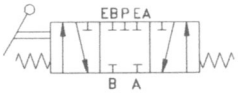

Port Size	2 Pos. with Spring	2 Pos. w/o Spring	3 Pos. Spring Ctr.
With 1/4” subbase	R431008468 (PJ-020210-00000)	R431008467 (PJ-020200-00000)	R431008481 (PJ-023210-00000)
With 3/8” subbase	R431008485 (PJ-030210-00000)	R431008484 (PJ-030200-00000)	R431008498 (PJ-033210-00000)
Less subbase	R431009175 (PJ-010210-00000)	R431008453 (PJ-010200-00000)	R431008465 (PJ-013210-00000)

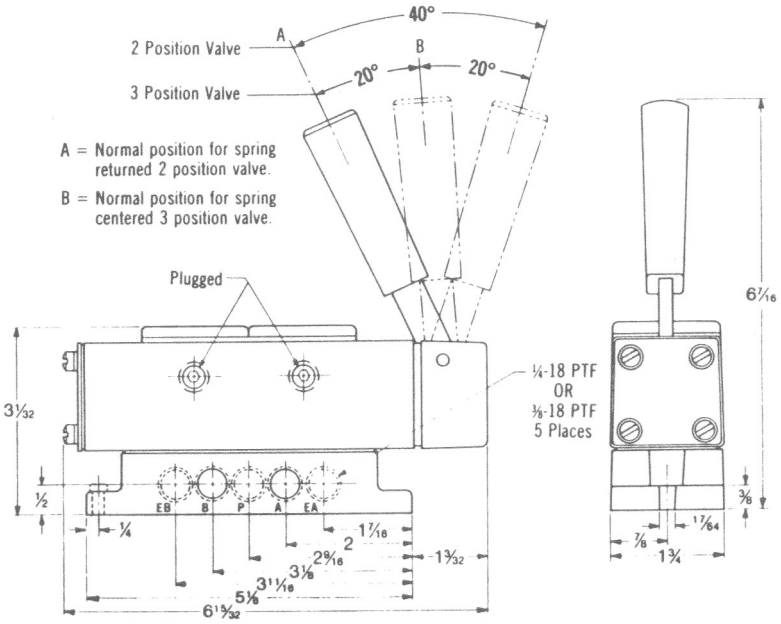

TaskMaster® Valve, 4-Way Directional Control

Hopper dump valve; repair kits, subplates and parts

Hopper Dump Valve

Part No. R431005556 (old P –060681-00001)
Part No. R431005557 (old P –060681-00002)*

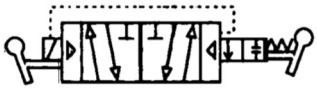

This unique version is typically used for operating hoppers on many types of trailers hauling different types of aggregate. The valve has solenoid and handle operators. The solenoid permits remote operation of the valve. The handle operates in conjunction with a bleeder button which depressurizes the air spring return allowing the handle to be moved. Manual operation can only be obtained with the solenoid de-energized.

*Higher flow due to plugs omitted from EA and EB ports.

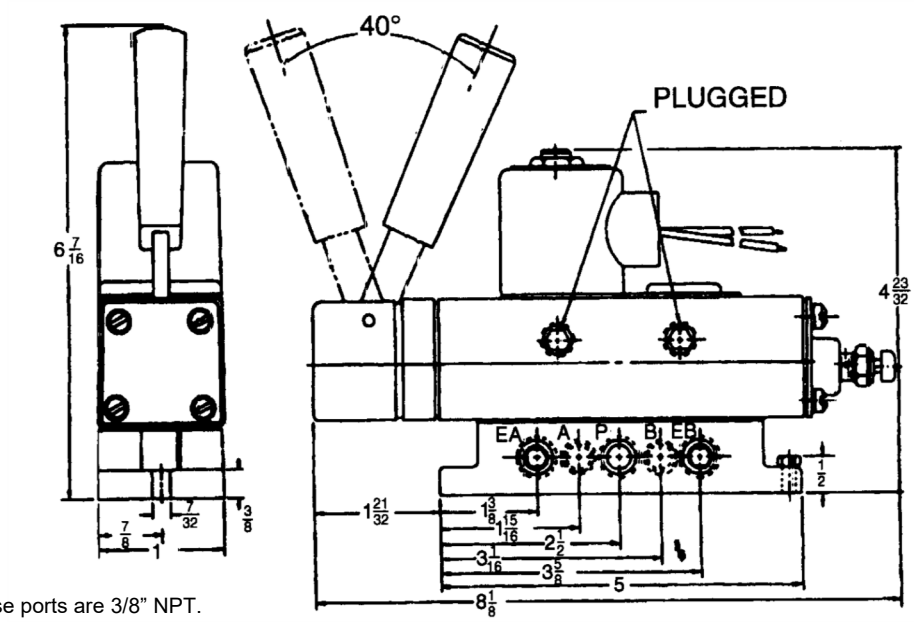

Note: All subbase ports are 3/8” NPT.

Repair Kits, Subplates and Miscellaneous Parts

Repair Kits/Parts

Part No.	Description
R431005395	Valve body kit
R431006634	Valve body kit, Viton
R431005396	Operator kit
R431005397	Operator kit, Viton
R431005645	Solenoid repair kit (includes plunger, spring & gasket)
R431006057	Solenoid exhaust filter
R431006858	Solenoid sleeve (armature)

Subplates

Part No.	Description
R431005110	1/4” NPT subplate
R431005109	3/8” NPT subplate

*Last digit in model code. (Does not apply to Hopper Dump Valve version P –060681-00001 or explosion proof models.)

Solenoid Operators and Kits

Last Digit*	Coil Voltage	Part Numbers		
		Solenoid Operator Kit		Solenoid
		Ext. Pilot	Internal Pilot	
1	120VAC, 60 Hz	R431005146	R431005137	R431002779
2	240VAC, 60 Hz	R431005149	R431005143	R431002780
3	480VAC, 60 Hz	—	R431005144	R431002781
4	12VDC	R431005147	R431005140	R431002783
5	24VDC	R431005148	R431005142	R431002782

Coils

Last Digit*	Part no.	Coil Voltage
1	R431005915 (P –061920-00000)	120VAC, 60 Hz
2	R431005916 (P –061920-00001)	240VAC, 60 Hz
3	R431005917 (P –061920-00002)	480VAC, 60 Hz
4	R431005919 (P –061920-00004)	12VDC
5	R431005918 (P –061920-00003)	24VDC

PowerMaster® Valve, 4-Way Directional Control

Technical data and features

4 Way / 2 & 3 Position
1/4” - 1-1/4” NPTF Solenoid, Air Pilot & Mechanical Operators





TECHNICAL DATA:

Port Sizes: 1/4”, 3/8”, 1/2”, 3/4”,1” 1-1/4” NPTF

Working Pressure: Maximum valve inlet air pressure: 150 psi (10.3 bar)
Minimum air pilot pressure:
15 psi (1.0 bar) w/o return spring (all sizes)
30 psi (2.1 bar) 1” and 1-1/4” valves w/return spring
40 psi (2.8 bar) 1/2” and 3/4” valves w/return spring
50 psi (3.4 bar) 1/4” and 3/8” valves w/return spring
Valves can also be used for vacuum or dual pressure service when externally piloted.

Flow:
C_v 2.39 (2390 Nl/min) 1/4” NPTF
C_v 3.73 (3730 Nl/min) 3/8” NPTF
C_v 6.17 (6170 Nl/min) 1/2” NPTF
C_v 7.88 (7880 Nl/min) 3/4” NPTF
C_v 13.61 (13,610 Nl/min) 1” NPTF
C_v 15.75 (15,750 Nl/min) 1-1/4” NPTF

Temperature Range: -20°F to +160°F (-29°C to 71°C)

Media: Air and inert gases (In service higher than 18 cycles per minute or with continuous air flow, a lubricator is recommended.)

Materials: Bodies and operators: Die cast aluminum
Spool: Machined from high-tensile aluminum, hard anodized, ground & polished to 8 micro-inch finish
Seals: Buna-N, oil-resistant, and bonded to a metallic ring (Hl-Nitrile Buna-N seals are also available.

Manual Override: Non-Locking

Electrical Data:

Standard Voltage (all coils are rated for continues duty)	Power Consumption	
	Inrush	Holding
120, 240 VAC 60 Hz	33 VA	22 VA
12, 24 VDC	12 W	

Features:

- **Response time.** Actual test data shows only 175 milliseconds is required to fill a 250 cubic inch volume to 80% of line pressure with a normally closed solenoid operated valve. Where a spring is used to open the valve (normally open valve) only 253 milliseconds is required to fill the same volume.
- **Continuous-duty solenoid.** Won’t burn out...even when energized for extended periods. Pilot operated for fast response.
- **Lightweight aluminum spool** of extra large diameter assures high-speed performance. Requires only short movement to deliver high-capacity air flow. File-hard anodized surface, polished to an 8 micro-inch finish, withstands wear and abrasion; offers greatest sealing qualities, minimum friction and maximum speed. Spool is balanced so air pressure won’t affect its position.
- **Low-friction, positive sealing ring** is actually two seals in one; an outer static seal and an inner dynamic seal bonded to a metallic spacer ring. The ring protects the inner seal from the radical compression absorbed by the other seal. Assures longest life with positive sealing.
- **Seal retainers** keep inner and outer sealing surfaces in precise position for maximum reliability and efficiency. Combined with the non-compressible seal rings, PowerMaster valve retainers eliminate tolerance build-up in the free stack height of both retainers and seals.
- **Free-floating piston** with extra large surface area means faster response at lower pressures.
- **Manual non-locking overrides** allow supplementary manual control an permits operating the valve when the electric power is off.
- **External pilot** allows an independent air supply to be connected to the pilot port in the valve operator or subplate for air pilot pressure.
- **Wire leads** of 24” allows simplified conduit wiring.
- **Solenoid coil removal.** Unscrew hex nut and slip off the solenoid housing and coil.
- **Exhaust restrictors** can be used in either or both exhaust port to provide speed control of cylinders. (Refer to Accessory Valve catalog SC-400.)

PowerMaster® Valve, 4-Way Directional Control

4 Way, 2 & 3 Position, single and double solenoid operated
Tapped body, 1/4” through 3/4” NPTF models

Single & Double Solenoid Coil Voltages

120 VAC part numbers are shown on this page, for other voltages, use the following table and substitute the appropriate suffix on the MODEL number of the valve being used.

Coil Voltages		Suffix: Single Solenoid	Suffix: Double Solenoid
AC	120 Volts 60 Hz	8500	8484
AC	240 Volts 60 Hz	8700	8686
AC	480 Volts 60 Hz	8900	8888
AC	110 Volts 50 Hz	8100	8080
AC	220 Volts 50 Hz	8300	8282
DC	12 Volts	9500	9494
DC	24 Volts	9100	9090
DC	240 Volts	9300	9292

Double Solenoid: 4 Way, Tapped Exhaust

For part number, contact factory.

Single Solenoid
4 Way, Tapped Exhaust

Port Size	Internal Air Pilot		External Air Pilot	
	Part No.	Model No.	Part No.	Model No.
1/4”	R431008519	PT-024106-08500	R431008516	PT-024104-08500
3/8”	R431008542	PT-034106-08500	R431008538	PT-034104-08500
1/2”	R431008566	PT-044106-08500	R431008564	PT-044104-08500
3/4”	R431008595	PT-064106-08500	R431008589	PT-064104-08500

Port Size	Internal Air Pilot		External Air Pilot	
	Center Spring, 3 Pos. Closed Ctr.	2 Position No Springs	Center Spring, 3 Pos. Closed Ctr.	2 Position No Springs
1/4”	R431008524 (PT-024117-08484)	R431008521 (PT-024107-08484)	— (PT-024115-08484)	R431009183 (PT-024105-08484)
3/8”	R431008550 (PT-034117-08484)	R431008545 (PT-034107-08484)	R431008549 (PT-034115-08484)	R431008541 (PT-034105-08484)
1/2”	R431008575 (PT-044117-08484)	R431008571 (PT-044107-08484)	R431008574 (PT-044115-08484)	R431009193 (PT-044105-08484)
3/4”	R431008601 (PT-064117-08484)	R431008598 (PT-064107-08484)	R431008600 (PT-064115-08484)	R431008593 (PT-064105-08484)

	A	B		C		D		E		F		G		H		I		J	
		IN	mm	IN	mm	IN	mm	IN	mm	IN	mm	IN	mm	IN	mm	IN	mm	IN	mm
SINGLE SOLENOID	1/4” & 3/8”	1.50	38	2.56	65	2.44	62	6.65	169	1.00	25	2.00	51	.69	18	1.69	43	.28	7
	1/2” & 3/4”	1.88	48	3.06	78	2.94	75	8.03	204	1.19	30	2.38	60	.94	24	2.00	56	.28	7
DOUBLE SOLENOID	1/4” & 3/8”	1.50	38	2.56	65	2.56	65	6.91	176	1.00	25	2.00	51	.69	18	1.81	46	.28	7
	1/2” & 3/4”	1.88	48	3.06	78	3.06	78	8.28	210	1.19	30	2.38	60	.94	24	2.12	54	.28	7

	K		L		M		N		O		P		Q		R		S		T	
	IN	mm	IN	mm	IN	mm	IN	mm	IN	mm	IN	mm	IN	mm	IN	mm	IN	mm	IN	mm
SINGLE SOLENOID	.50	13	1.12	28	1.06	27	1.56	40	1.94	49	3.31	84	4.38	111	1.56	40	1.50	38	3.00	76
	.50	13	1.44	37	1.06	27	1.69	43	2.06	52	3.44	87	4.50	114	1.56	40	1.75	44	3.50	89
DOUBLE SOLENOID	.50	13	1.12	28	1.06	27	1.56	40	5.25	133	3.31	84	4.38	111	1.56	40	1.50	38	3.00	76
	.50	13	1.44	37	1.06	27	1.69	43	6.62	168	3.44	87	4.50	114	1.56	40	1.75	44	3.50	89

PowerMaster® Valve, 4-Way Directional Control

4 Way, 2 & 3 Position, single and double solenoid operated
Tapped body, 1” through 1-1/4” NPTF models

Single Solenoid, Tapped Exhaust

Port Size	Part No.	Model No.	Approx. Weight lbs. (kg)
1”	R431008610	PT-084106-03100	10 (4.5)
1-1/4”	R431008619	PT-094106-03100	10 (4.5)

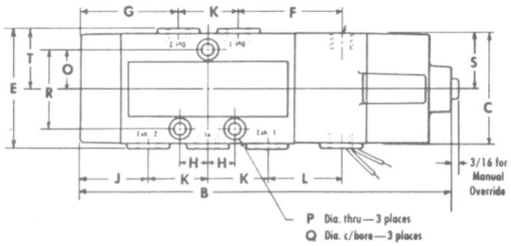

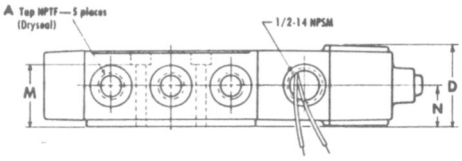

Dimensions in inches (mm)

A	B	C	D	E	F	G	H
1”-11 1/2 1 1/4”-11 1/2	13.44 (341)	4.13 (105)	2.59 (66)	4.38 (111)	4.19 (106)	4.00 (102)	1.31 (33)

J	K	L	M	N	O	P	Q	R	S	T
2.69 (68)	2.63 (67)	2.75 (70)	2.13 (54)	1.31 (33)	1.50 (38)	0.34 (8.7)	0.63 (15. 9)	3.00 (76)	2.06 (52)	2.19 (56)

Double Solenoid, Tapped Exhaust

Port Size	Internal Air Pilot			Approx. Weight lbs. (kg)
	Center Spring, 3 Pos. Closed Ctr.	Center Spring, 3 Pos. Exhaust Open Ctr.	No Springs	
1”	R431008613 PT-084117-03030	R431008615 PT-084517-03030	R431008611 PT-084107-03030	12.25 (5.57)
1-1/4””	R431008623 PT-094117-03030	R431008625 PT-094517-03030	R431008621 PT-094107-03030	12.25 (5.57)

Dimensions in inches (mm)

A	B	C	D	E	F	G	H	J	K	L
1”-11 1/2 1 1/4”-11 1/2	16.25 (413)	4.13 (105)	2.59 (66)	4.38 (111)	4.19 (106)	2.75 (75)	1.31 (33)	2.88 (68)	2.63 (67)	2.88 (73)

M	N	O	P	Q	R	S	T	U	V	
2.13 (54)	1.31 (33)	1.50 (38)	0.34 (8.7)	0.63 (15.9)	4.06 (103)	2.63 (67)	2.19 (56)	2.06 (52)	3.00 (76)	

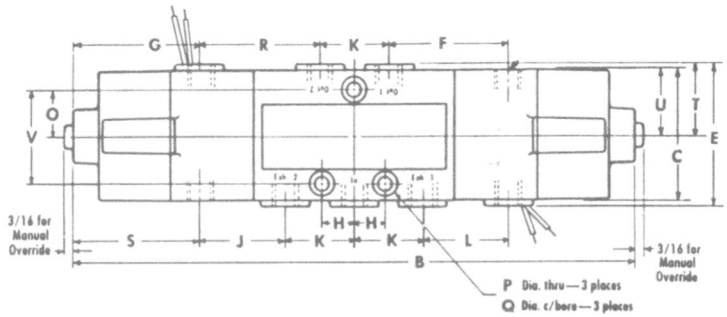

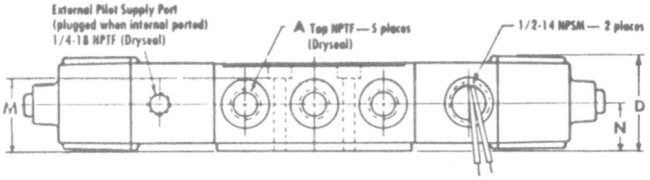

Note:

All valves on this page are also available in 24VDC. Substitute –04300 as the suffix in the model code for single solenoid models, or –04242 for double solenoid valves. 120VAC and 24VDC are the only voltages available in 1” and 1- 1/4” models. A complete listing of model codes to new part numbers is available online on the PowerMaster Valve page at: www.aventics.com/us/pmvalve

PowerMaster® Valve, 4-Way Directional Control

4 Way, 2 & 3 Position, lever operated
Tapped body, 1/4” through 3/4” NPTF models

4 Way, Tapped Exhaust, Lever Operated

Port Size	Two Position			Approx. Weight lbs. (kg)
	Return Spring	Detents	No Spring or Detents	
1/4”	R431008510 (PT-024101-00200)	R431008508 (PT-024101-00114)	R431008507 (PT-024101-00100)	3.25 (1.48)
3/8”	R431008532 (PT-034101-00200)	R431008530 (PT-034101-00114)	R431008529 (PT-034101-00100)	3.25 (1.48)
1/2”	R431008558 (PT-044101-00200)	R431008556 (PT-044101-00114)	R431008555 (PT-044101-00100)	4.25 (1.93)
3/4”	R431008583 (PT-064101-00200)	R431008581 (PT-064101-00114)	R431008580 (PT-064101-00100)	4.25 (1.93)

Port Size	Three Position				Approx. Weight lbs. (kg)
	Closed Center		Exhaust Open Center		
	Center Springs	Detents	Center Springs	Detents	
1/4”	R431008511 (PT-024101-00300)	R431008509 (PT-024101-00115)	R431008526 (PT-024501-00300)	R431008525 (PT-024501-00115)	3.25 (1.48)
3/8”	R431008533 (PT-034101-00300)	R431008531 (PT-034101-00115)	R431008553 (PT-034501-00300)	R431008552 (PT-034501-00115)	3.25 (1.48)
1/2”	R431008559 (PT-044101-00300)	R431008557 (PT-044101-00115)	R431008577 (PT-044501-00300)	R431008576 (PT-044501-00115)	4.25 (1.93)
3/4”	R431008584 (PT-064101-00300)	R431008582 (PT-064101-00115)	R431008604 (PT-064501-00300)	R431008603 (PT-064501-00115)	4.25 (1.93)

Dimensions in inches (mm)

A	B	C	D	E	F	G	H	J	K	L
1/4-18 3/8-18	8.13 (207)	7.25 (184)	3.00 (76)	1.50 (38)	2.44 (62)	0.69 (17.5)	1.00 (25)	1.13 (29)	0.44 (11.2)	1.69 (43)
1/2-14 3/4-14	9.44 (240)	8.69 (221)	3.50 (89)	1.75 (44)	2.94 (75)	0.94 (23.9)	1.19 (30)	1.34 (34)	0.63 (16.0)	2.00 (51)
M	**N**	**O**	**P**	**Q**	**R**	**S**	**T**	**U**	**V**	
1.50 (38)	1.06 (27)	0.88 (22.2)	1.56 (40)	37°	5.19 (132)	2.00 (51)	1.38 (35)	2.75 (70)	1.94 (49)	
1.88 (48)	1.06 (27)	1.09 (43)	1.69 (43)	35°	5.44 (138)	2.38 (60)	1.63 (41)	3.25 (83)	2.06 (52)	

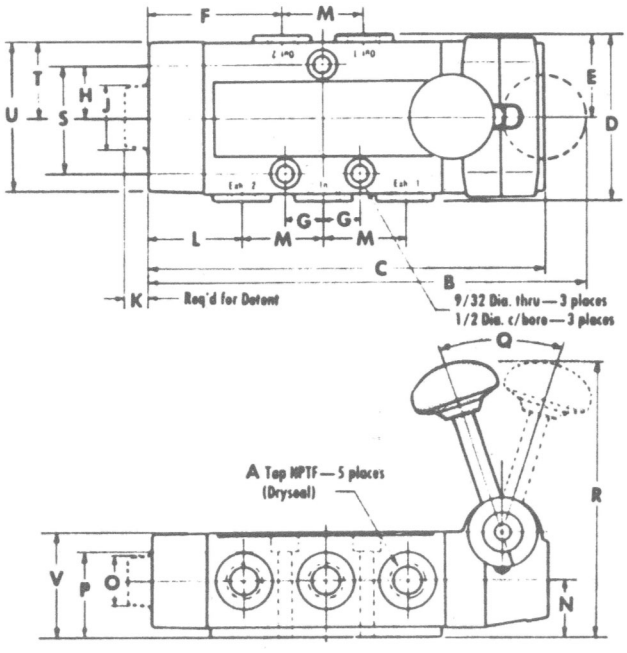

PowerMaster® Valve, 4-Way Directional Control

4 Way, 2 & 3 Position, treadle operated
Tapped body, 1/4” through 3/4” NPTF models

4 Way, Tapped Exhaust, Treadle Operated

Port Size	Less Springs	Center Springs Closed Center	Approx. Weight lbs. (kg)
1/4”	R431008513 (PT-024101-01100)	R431008514 (PT-024101-01200)	4.25 (1.93)
3/8”	R431008535 (PT-034101-01100)	R431008536 (PT-034101-01200)	4.25 (1.93)
1/2”	R431008561 (PT-044101-01100)	R431008562 (PT-044101-01200)	5.50 (2.49)
3/4”	R431008586 (PT-064101-01100)	R431008587 (PT-064101-01200)	5.50 (2.49)

Treadle Operators
Treadle operators are furnished without a return spring for two-position heel and toe operation. For three-position operation, centering springs are used. The two-position model may also be used as a three-position, closed center combination.

Dimensions in inches (mm)

A	B	C	D	E	F	G	H	J	K
1/4-18 3/8-18	1.06 (27)	1.56 (40)	3.31 (84)	5.31 (135)	10.44 (265)	1.50 (38)	0.69 (17.5)	1.69 (43)	3.00 (76)
1/2-14 3/4-14	1.06 (27)	1.69 (43)	3.88 (99)	5.75 (146)	11.94 (303)	1.88 (48)	0.94 (23.9)	2.00 (51)	3.50 (89)
L	**M**	**N**	**O**	**P**	**Q**	**R**	**S**	**T**	**U**
2.00 (51)	1.00 (25)	2.44 (62)	3.56 (90)	1.78 (45)	1.50 (38)	2.75 (70)	1.38 (35)	1.94 (49)	7.25 (184)
3.38 (86)	1.19 (30)	2.94 (75)	3.56 (90)	1.78 (45)	1.75 (44)	3.25 (83)	1.63 (41)	2.06 (52)	8.69 (221)

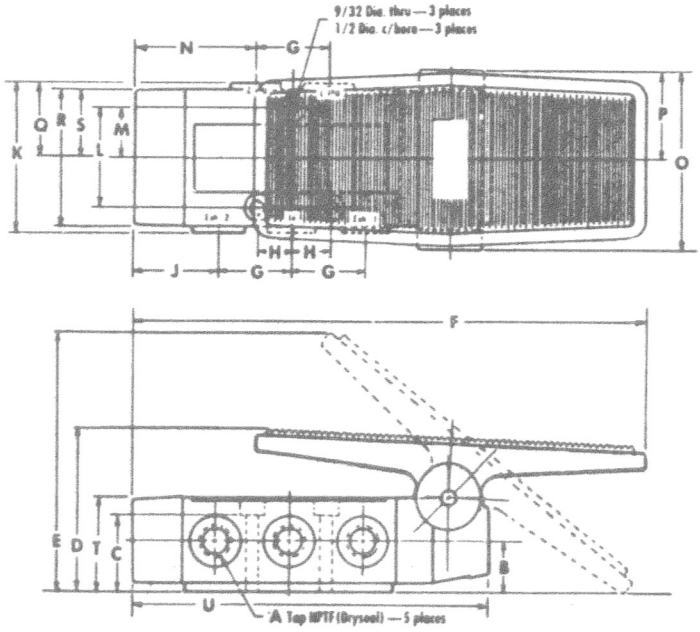

PowerMaster® Valve, 4-Way Directional Control

4 Way, 2 & 3 Position, pedal operated, spring returned
Tapped body, 1/4” through 3/4” NPTF models

4 Way, Tapped Exhaust, Pedal Operated

Port Size	Part Number (Model Number)	Approx. Weight lbs. (kg)
1/4”	R431008512 (PT-024101-01000)	3.25 (1.48)
3/8”	R431008534 (PT-034101-01000)	3.25 (1.48)
1/2”	R431008560 (PT-044101-01000)	4.25 (1.93)
3/4”	R431008585 (PT-064101-01000)	4.25 (1.93)

Dimensions in inches (mm)

A	B	C	D	E	F	G	H	J	K
1/4-18 3/8-18	10.69 (272)	3.56 (90)	2.91 (74)	2.00 (51)	1.69 (43)	1.50 (38)	1.06 (27)	1.94 (49)	2.44 (62)
1/2-14 3/4-14	12.06 (306)	3.56 (90)	2.94 (75)	2.38 (60)	2.00 (51)	1.88 (48)	1.06 (27)	2.10 (53)	2.94 (75)
L	**M**	**N**	**O**	**P**	**Q**	**R**	**S**	**T**	**U**
0.69 (17.5)	1.00 (25)	1.56 (40)	2.88 (73)	1.78 (45)	1.50 (38)	2.75 (70)	1.38 (35)	3.00 (76)	7.25 (184)
0.94 (23.9)	1.19 (30)	1.69 (43)	2.88 (73)	1.78 (45)	1.75 (44)	3.25 (83)	1.63 (41)	3.50 (89)	8.69 (221)

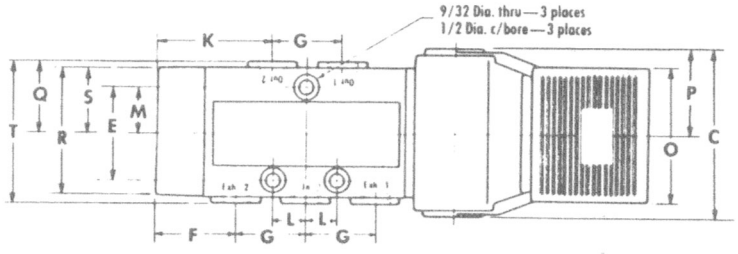

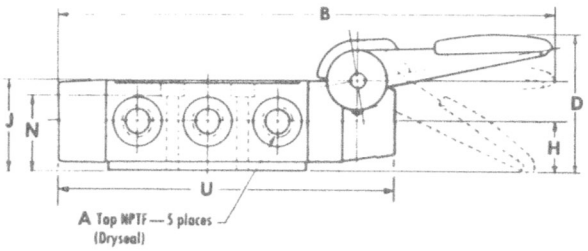

PowerMaster® Valve, 4-Way Directional Control

4 Way, 2 & 3 Position, air pilot operated
Tapped body, 1/4” through 1-1/4” NPTF models

4 Way, Tapped Exhaust, Air Pilot Operated

Port Size	Single Air Pilot	Double Air Pilot			Approx. Weight lbs. (kg)
		Center Springs, Closed Center	Center Springs, Exh. Open Center	No Springs	
1/4”	R431008515 (PT-024104-01700)	R431008523 (PT-024115-01616)	R431008528 (PT-024515-01616)	R431008518 (PT-024105-01616)	2.75 (1.25)
3/8”	R431008537 (PT-034104-01700)	R431008547 (PT-034115-01616)	R431008554 (PT-034515-01616)	R431008540 (PT-034105-01616)	2.75 (1.25)
1/2”	R431008563 (PT-044104-01700)	R431008573 (PT-034115-01616)	R431008578 (PT-044515-01616)	R431008565 (PT-044105-01616)	4.25 (1.93)
3/4”	R431008588 (PT-064104-01700)	R431008599 (PT-064115-01616)	R431008606 (PT-064515-01616)	R431008592 (PT-064105-01616)	4.25 (1.93)
1”	R431008607 (PT-084104-01700)	R431008612 (PT-084115-01616)	R431008614 (PT-084515-01616)	R431008609 (PT-084105-01616)	7.75 (3.52)
1-1/4”	R431008616 (PT-094104-01700)	R431008622 (PT-094115-01616)	R431008624 (PT-094515-01616)	R431008618 (PT-094105-01616)	7.75 (3.52)

Dimensions in inches (mm)

A	B	C	D	E	F	G	H	J	K
1/4-18 3/8-18	6.63 (168)	3.00 (76)	1.50 (38)	1.00 (25)	2.56 (65)	0.69 (17.5)	1.88 (48)	0.69 (17.5)	1.13 (29)
1/2-14 3/4-14	8.00 (203)	3.50 (89)	1.75 (44)	1.19 (30)	3.06 (78)	0.94 (23.9)	2.38 (60)	0.69 (17.5)	1.44 (37)
1-11 1/2 1 1/4—11 1/2	10.63 (270)	4.38 (111)	5.19 (132)	1.50 (38)	4.00 (102)	1.31 (33)	3.25 (83)	0.75 (19.1)	1.94 (49)
L	**M**	**N**	**O**	**P**	**Q**	**R**	**S**	**T**	
1.50 (38)	1.94 (49)	1.06 (27)	1.56 (40)	0.28 (7.1)	0.50 (12.7)	2.00 (51)	1.38 (35)	2.75 (70)	
1.88 (48)	2.06 (52)	1.06 (27)	1.69 (43)	0.28 (7.1)	0.50 (12.7)	2.38 (60)	1.63 (41)	3.25 (83)	
2.63 (67)	2.59 (66)	1.31 (33)	2.13 (54)	0.34 (8.6)	0.63 (15.9)	3.00 (76)	2.06 (52)	4.13 (105)	

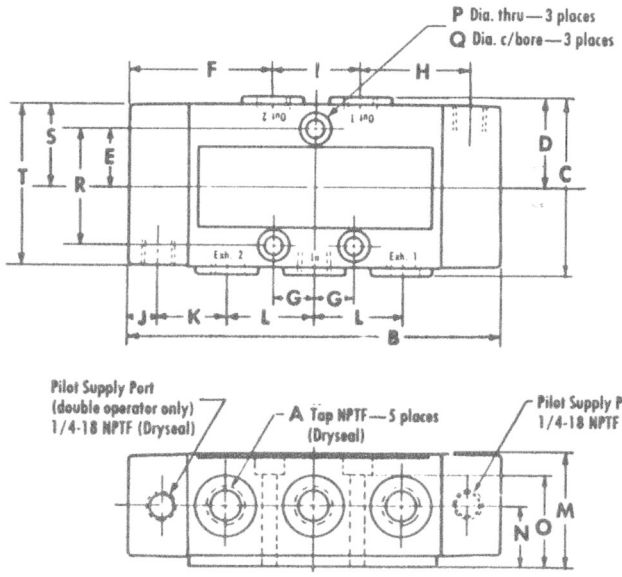

PowerMaster® Valve, 4-Way Directional Control
Repair kits

Repair Kits (Buna-N elastomers)

Port Size	Repair Kit	Part No.	Old Part No.
1/4” - 3/8”	Valve spool kit	R431004790	P -058875-00000
1/2” - 3/4”	Valve spool kit	R431004795	P -058884-00000
1” - 1 1/4”	Valve spool kit	R431004793	P -058880-00000
1/4” - 3/8”	*Solenoid Repair	R431006971	P -066948-00000
1/2” - 3/4”	*Solenoid Repair	R431006972	P -066948-00001
1” - 1 1/4”	*Solenoid Repair	R431004792	P -058878-00000
1/4” - 3/8”	*Air Pilot Operator	R431005569	P -060693-00000
1/2” - 3/4”	*Air Pilot Operator	R431005568	P -060692-00000
1” - 1 1/4”	*Air Pilot Operator	R431005567	P -060691-00000

* Two each required for double operator valves.

Repair Kits (Hi-Nitrile)**

Port Size	Repair Kit	Part No.	Old Part No.
1/4” - 3/8”	Valve spool kit	R431004791	P -058875-00001
1/2” - 3/4”	Valve spool kit	R431004796	P -058884-00001
1” - 1 1/4”	Valve spool kit	R431004794	P -058880-00001

* These seals have been tested and have proven compatible with ASTM #1 and #3 oils as well as ANDEROL 500.

With these repair kits, the elastomer seals and some common wear parts on the component are renewed. On severely worn or damaged components, additional parts may be required. For additional parts, information and service instructions, refer to Service Manual SM-300.8000.

Solenoid Repair for 1/4” – 3/4” Valves

Voltage	Coil Only	Complete Solenoid Operator
120VAC, 60 Hz	R431005915	R431002779
240VAC, 60 Hz	R431005916	R431002780
480VAC, 60 Hz	R431005917	R431002781
12VDC	R431005918	R431002782
24VDC	R431005919	R431002783
240VDC	R431005920	R431002789
120VAC, 50 Hz	—	R431005751
240VAC, 50 Hz	—	R431005750
Sol. Operator Repair Kit **		R431005645
Solenoid Exhaust Muffler		R431006057

** Includes plunger, return spring and gasket. Order coil separately.

Solenoid Repair for 1” – 1 1/4” Valves

Voltage	Coil Only
120VAC, 60 Hz	R431004228
240VAC, 60 Hz	R431004229
480VAC, 60 Hz	R431009174
12VDC	R431004223
24VDC	R431004222
230VDC	R431004224
120VAC, 50 Hz	R431004225
240VAC, 50 Hz	—
Sol. Operator Repair Kit***	Part No.
Internal Pilot	R431004652
External Pilot	R431004647

*** Coils are not included and must be ordered separately.

Technical Section
Valve diagrams

AVENTICS CERAM™ 4 WAY DIRECTIONAL CONTROL VALVE-SLIDE TYPE

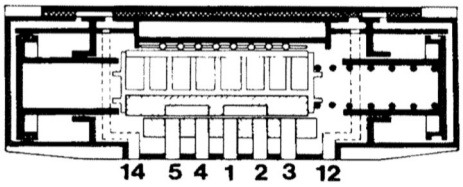

Air Pilot 2 Position
Metal Spring Return

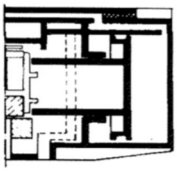

12 End
for Air Spring Return

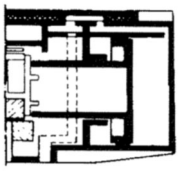

12 End
for Double Air Pilot

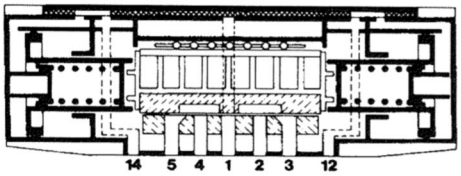

Air Pilot 3 Position
Exhaust Open Center

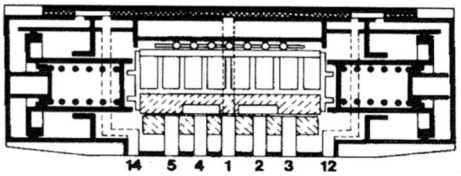

Air Pilot 3 Position
Closed Center

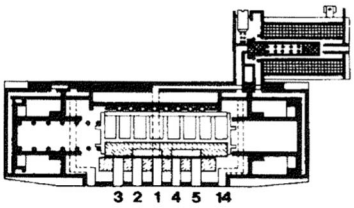

Single Solenoid 2 Position
Metal Spring Return

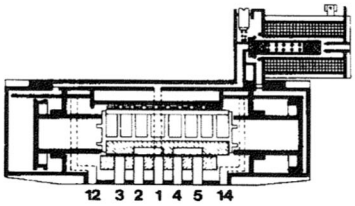

Single Solenoid 2 Position
Air Spring Return

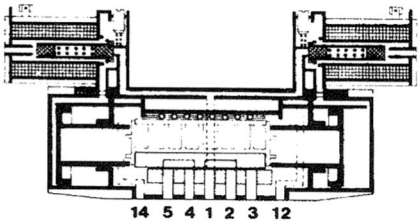

Double Solenoid
2 Position

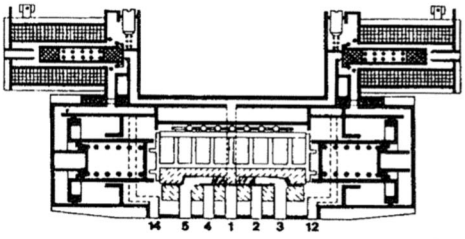

Double Solenoid 3 Position
Exhaust Open Center

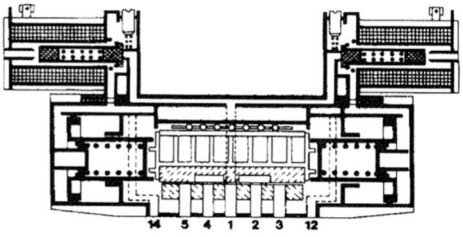

Double Solenoid 3 Position
Closed Center

Port	Marking
1=	Supply Pressure
2 & 4=	Delivery (Cylinder) Ports
3 & 5=	Exhaust Ports
12 & 14=	External Pilot Ports

Technical Section
Valve diagrams

Miniblock 3-Way Valve

2mm Miniblock™ Roller Cam Operated

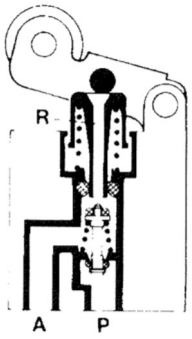

Port	Marking
P=	Supply Pressure
A=	Delivery (Cylinder) Ports
R=	Exhaust Ports

Series 840 4-Way Valve

Single Solenoid
Air Spring Return

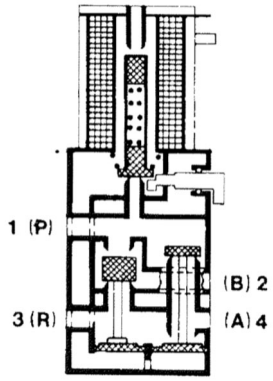

Port	Marking
1(P)=	Supply Pressure
2(B) & 4(A)=	Delivery (Cylinder) Ports
3(R)=	Exhaust Ports

Series 740 4-Way Directional Control Valves - Diaphragm/Poppet Type

Single Solenoid
Air Spring Return

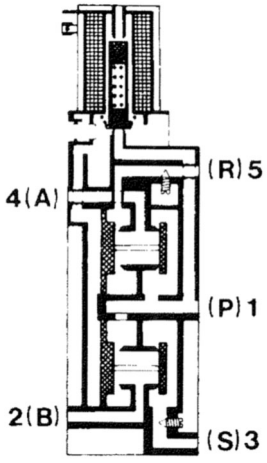

Double Solenoid
2 Position

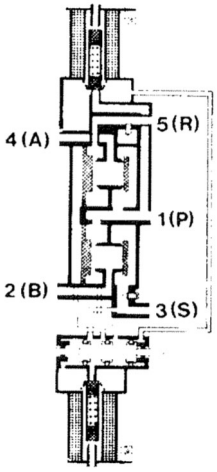

Single Air Pilot
Air Spring Return

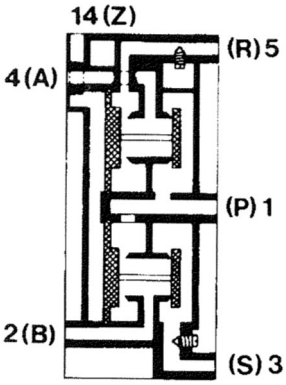

Double Air Pilot
2 Position

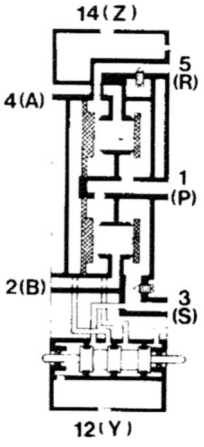

Port	Marking
1=	Supply Pressure
2(B) & 4(A)=	Delivery (Cylinder) Ports
3(S) & 5(R)=	Exhaust Ports
12(Y) & 14(Z)=	Air Pilot Ports

Technical Section
Valve diagrams

Series CD07 4-Way Directional Control Valves - Spool Type

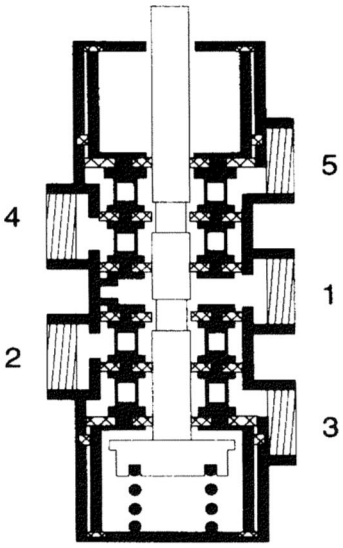

Mechanically Operated

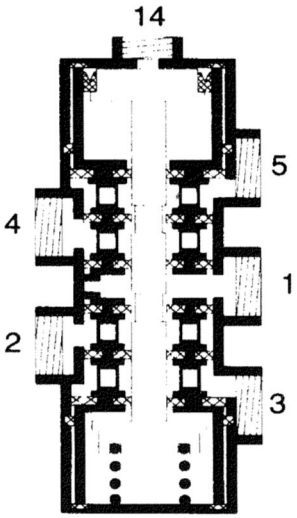

Single Air Pilot

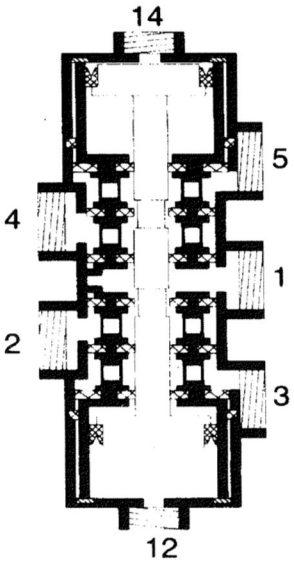

Double Air Pilot
2 Position

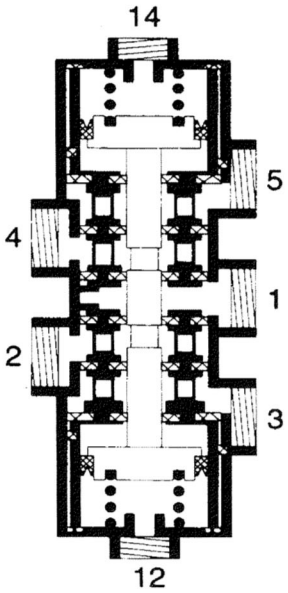

Double Air Pilot
2 Position Closed Center

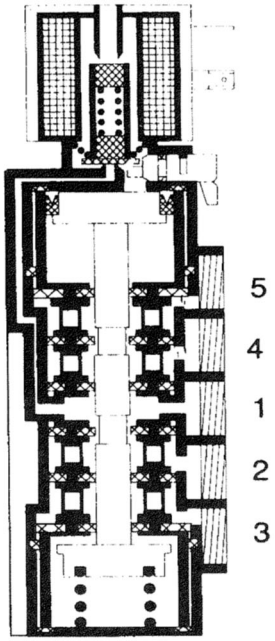

Single Solenoid Operated

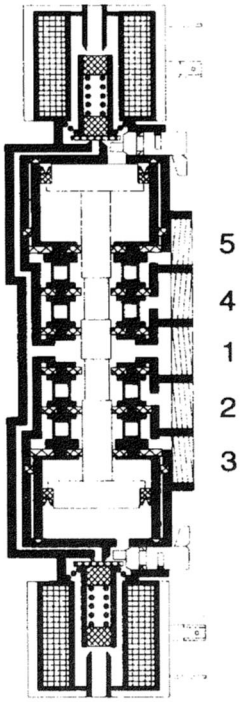

Double Solenoid
2 Position

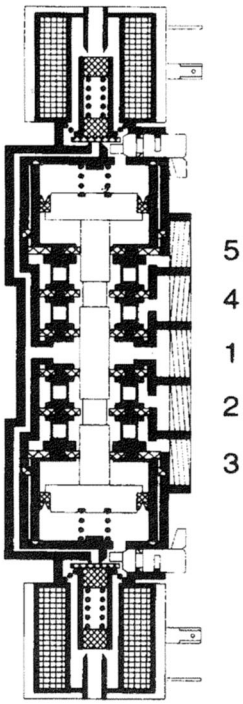

Double Solenoid
3 Position Exhaust Open Center

Port	Marking
1=	Supply Pressure
2 & 4=	Delivery (Cylinder) Ports
3 & 5=	Exhaust Ports
12 & 14=	External Pilot Ports

Technical Section
Application sketches

AVENTICS DIRECTIONAL CONTROL VALVE APPLICATION - to move cylinders & actuators.

Single acting cylinders need a 3/2 valve, meaning 3 ports and 2 positions. Port 1 = supply pressure; 2 = out to cylinder; 3 = exhaust from cylinder. (Unused port of a 4/2 or 5/2 valve can be plugged to provide a 3/2 function.)

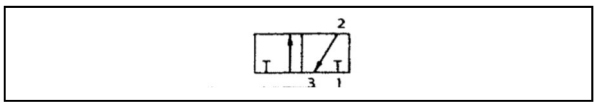

Double acting cylinders need a 4/2 or 5/2 valve (4 or 5 ports, 2 positions).

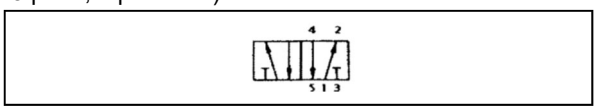

Connect a single acting cylinder to a 3/2 valve (simple circuit).

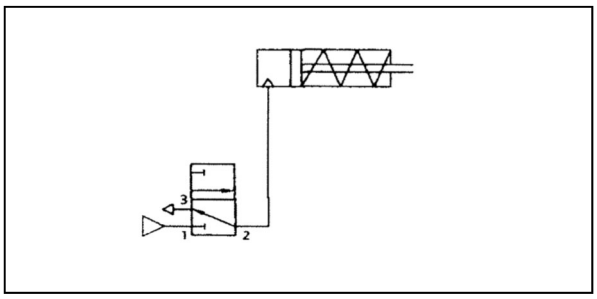

Connecting a double acting cylinder to a 5/2 valve.

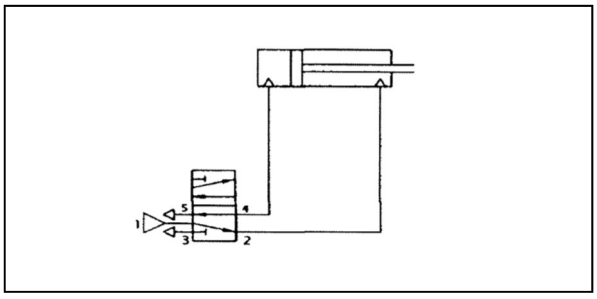

Connecting meter-out flow controls for speed control in both directions.

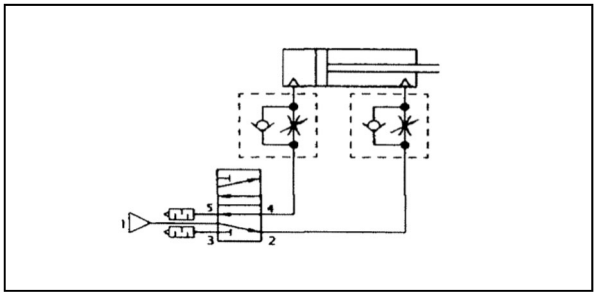

Rodless cylinders: regulated in same way as conventional cylinders (shown here with 5/2 valve with built-in flow control).

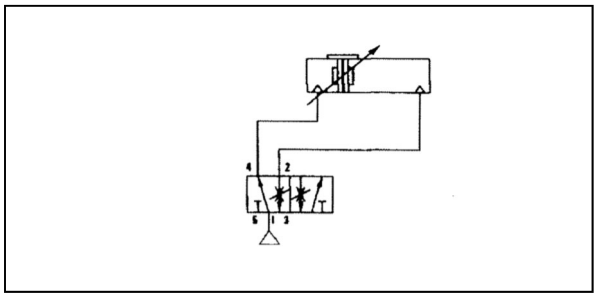

For vertical applications it is possible to use an extra pressure regulator for mass equilibrium and chick-choke valves for speed control.

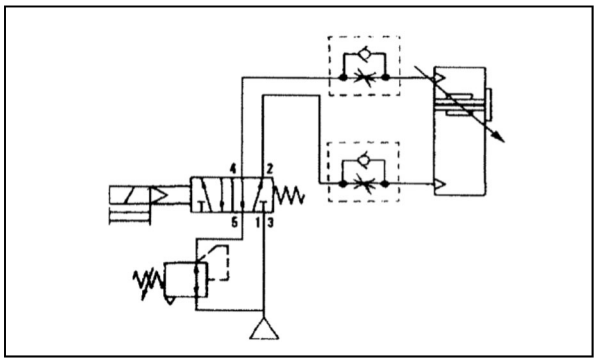

Dual pressure piping with a lower pressure returning a piston rod with no load can reduce energy costs up to 30%

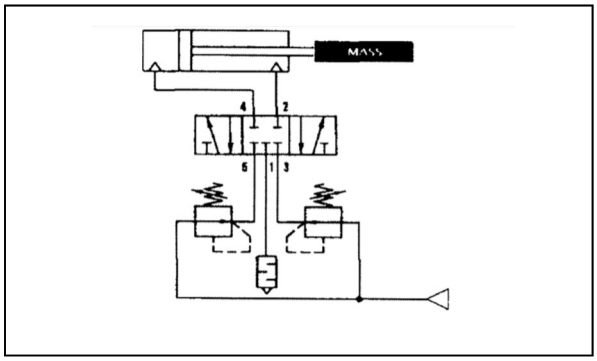

Pneumatic rectifier circuit allows unidirectional air motor to operate at two different, adjustable speeds, with braking action, using only one closed center valve.

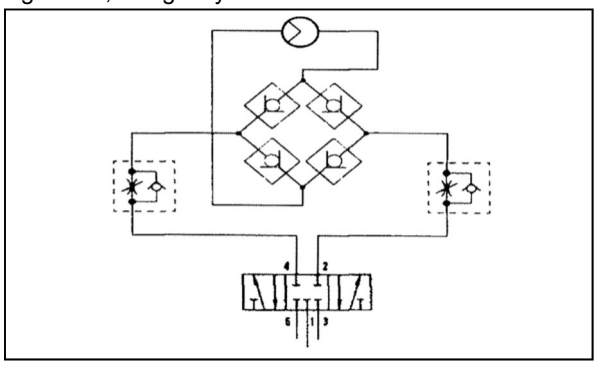

Technical Section
Vacuum Applications

#1 VACUUM-PRESSURE APPLICATION

Vacuum-Pick up object (Non-energized)
Pressure-Blow off object (Energized)
(Switching Ports 2 & 4, 3 & 5 will reverse the above action)
3 Way Application-Internal pilot supply
Port use:
1. Supple Pressure
2. Plugged
3. Not Used
4. To Vacuum Cup
5. From Vacuum Source

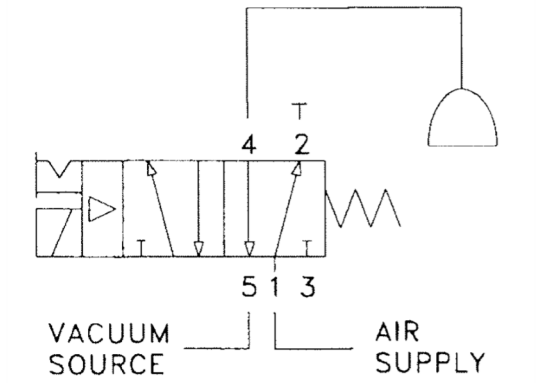

#2 VACUUM-PRESSURE APPLICATION

Vacuum-Pick up object
Pressure-Blow off object
4 Way Application-Internal Supply
Conditions
Non-Energized-Blow off Port 2, Pick up Port 4
Energized-Blow off Port 4, Pick up Port 2
Port use:
1. Supply pressure
2. To vacuum cap 1
3. & 5. To vacuum source
4. To vacuum cup 2

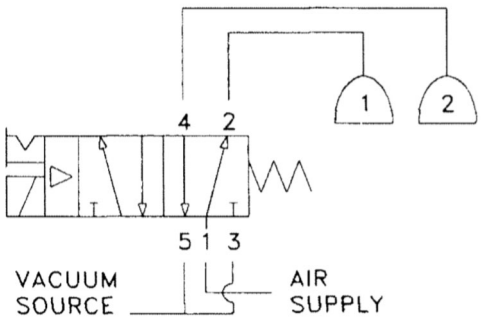

#3 VACUUM-GRAVITY APPLICATION

Vacuum-Pick up object (Energized)
Atmosphere-Gravity drop object (Non-energized)
(Switching Ports 2 & 4 will reverse the above action)
3 Way Application-External Pilot Supply required
Port use:
1. Vacuum source
2. Plugged
3. Not Used
4. To Vacuum Cup
5. Atmosphere

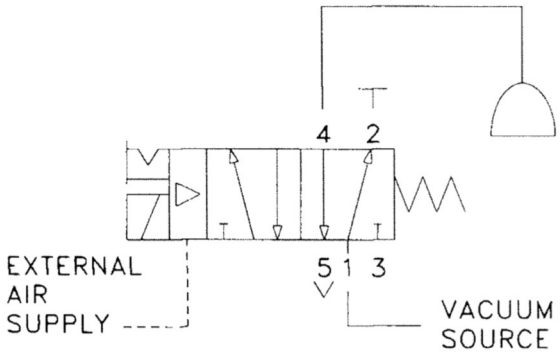

#4 VACUUM-GRAVITY APPLICATION

Vacuum-Pick up object
Atmosphere-Gravity drop object
4 Way Application-External Pilot Supply required
Conditions:
Non-energized-Pick ip cup 1, Drop cup 2
Energized-Pick up cup 2, Drop cup 1
Port use:
1. From vacuum source
2. To Vacuum Cup 1
3. & 5. Atmosphere (exhaust)
4. To Vacuum Cup 2

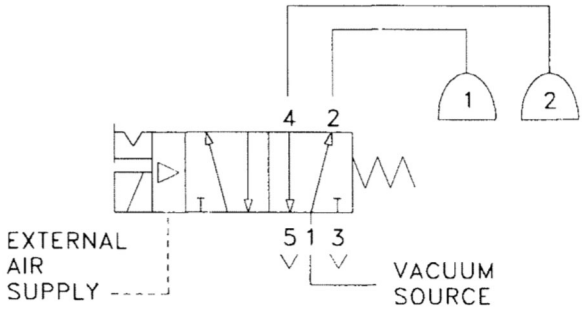

Technical Section
Dual pressure applications

Valves in this catalog that can be used in dual pressure applications: Ceram™, CD07, and PowerMaster® valves.

#1 APPLICATION
AIR SAVINGS
Work stroke provides full power to move load.
Return stroke uses low pressure to retract unloaded cylinder and uses less air.

#1 APPLICATION
AIR SAVINGS + DWELL
Work stroke provides full power to move load.
Return stroke uses low pressure for less air usage.
Both ends of stroke provide holding force when operators are de-energized.

#1 APPLICATION
EQUAL FORCE BOTH DIRECTIONS
Regulators set to pressures that equalize piston forces.
Piston stops at point operator is removed.

#1 APPLICATION
DUAL PRESSURE
Using AVENTICS sandwich pressure regulators.

CERAM Valve configured for Dual Pressure

Technical Section
Air valve sizing

AIR VALVE SIZING (Note: for cylinder sizing information see catalog SC-200)

FOREWORD
The purpose of this section is to provide a convenient method for estimating the port sizes of air valves to be used in general industrial applications. Cylinder bore size, cylinder speeds, operating pressure and the pressure drop through the components are considered in the selection process. Some general guidelines are offered for line lengths and piping. This section is not intended to be an engineering paper on the subject of air flow in pneumatic components. For very critical applications, the user should refer to the more extensive technical literature on the subject.

GENERAL INSTRUCTIONS
The air valve selected must be capable of delivering the necessary flow of air at an acceptable pressure drop through the valve, lines, and fittings to the power device...most typically a double acting cylinder.
For general applications, a pressure drop of 10 to 15 psi through the valve is usually satisfactory. Since pressure drops in a system are additive when components are piped in series, a lower pressure drop such as 5 psi should be used in complex circuits. The C_v charts in this section list actual air flow at the commonly used pressure drops. For other applications, an even lower pressure drop may be indicated. Consult AVENTICS for assistance on critical applications. The C_v value of a component is used to designate the actual flow capacity of that device. The actual flow at various pressure drops, operating pressures and temperature can be mathematically calculated form the Cv value. By definition, a flow path with a C_v value of 1.0 will pass 1 gpm of water with a 1 psi pressure drop under certain standard conditions. The C_v value can also be used to calculate the flow of a compressible fluid such as air, and these methods are widely used in both hydraulics and pneumatics.
It is very popular to sized an air valve by matching the NPT port size of the cylinder being used. This usually results in a satisfactory application. The port size on cylinders have been developed over many years of experience. In most cases, the NPT cylinder port has a higher C_v value than the typical valve of the same pipe size.

SIZING AIR VALVES WITH THE USE OF FLOW CHARTS
The following procedure can be used to size an air valve when the cylinder speed or other conditions do not meet the parameters previously stated. Matching the proper valve with a standard cylinder is very simple by using the following A & B Charts.

1. CHOOSE SYSTEM SUPPLY PRESSURE
Choose proper set of A & B Charts by matching system supply pressure (located on upper right corner of following pages). For air motors, spray guns or other continuous flow devices, use the SCFM (Standard Cubic Feet per Minute) listed by the component manufacturers.

2. DETERMINE AIR FLOW REQUIREMENT IN SCFM
Find SCFM required in Chart A by matching cylinder bore and cylinder speed (V_{ips}—inches per second) required. Use the extending or retracting stroke speed, whichever is fastest. If the cylinder has a large oversize piston rod, refer to the section titled “Additional Sizing Considerations.”

$V_{ips} = \frac{S}{T}$ or $\frac{S}{30/CPM}$
where:
Vips = velocity (inches per second)
S = stroke (inches)
T = time to complete on stroke (seconds)
CPM = cycles per minute (a complete cycle consists of one extension and one retraction)

3. DETERMINE THE C_v VALUE REQUIRED
Use Chart B to match SCFM (calculated in step 2 above) with acceptable pressure drop columns of r5-r25 psi. For most general applications, a pressure drop of r10 is acceptable. If application speed is critical, r5 psi should be considered. If speed is not critical, r15-r25 psi will choose the most economical (smaller C_v) value.

4. SELECT THE AIR VALVE SIZE
Select an air valve with a C_v value equal to or larger than that determined in the previous step.

EXAMPLES:
1. What C_v is required for a 2 1/2” bore x 20” stroke cylinder that must extend completely in 2 seconds? Assume a supply pressure of 60 psi and a pressure drop across the valve of 5 psi.

-Go to the 60 psi supply chart.
-Determine the velocity (V_{ips} = S/T) required by dividing stroke (in inches) by extension time:
20”/2 seconds = 10 inches/second
-On Chart A, find where the 10 inches per second column intersects the 2 1/2” bore row. SCFM required is 8.7 SCFM. On Chart B, under the pressure drop column of 5 psi, choose a valve that can deliver at least 8.7 SCFM. This indicates that a TaskMaster®, CD07, Size 1 Ceram™, etc. (or any other valve which can deliver at least 8.7 SCFM) has a capacity large enough for this application.

2. What C_v is required for a 6” bore x 30” stroke cylinder operating at 10 cycles per minute? Assume a supply pressure of 80 psi and a pressure drop of 10 psi.

-Go to the 80 psi supply chart.
-Because cycles per minute is a known factor, the velocity must be determined by using the following formula:
$V_{ips} = \frac{S}{30/cpm}$
30” = 30/3 = 10 inches/second
(30/10~~cpm)~~
-On chart A, find where the 10 inches per second column intersects ~~the 6” bore~~ row. SCFM required is 63.2 SCFM. On Chart B, under the pressure drop column of 10 psi, choose a valve that can deliver at least 63.2 SCFM. This indicates that a 1/4” PowerMaster®, Size II Ceram, 3/8” PowerMaster, Size III Ceram, etc. (or any other valve which can deliver at least 63.2 SCFM) has a capacity large enough for this application.
Note: If the V_{ips} is not located on Chart A, add 2 or more values to determine required V_{ips}. In example 2, assume that 45 cpm is required. $V_{ips} = \frac{S}{30/45cpm} = 45$ ips.
Add the 25 ips column (158.1 SCFM) and the 20 ips column (126.5 SCFM) for a total of 284.6 SCFM for 45 cpm.

Please Note: As an alternative to these procedures, an online air valve sizing tool is available at www.aventics.com/us

Technical Section
Air valve sizing

AIR VALVE SIZING (continued)

CYLINDERS
If the cylinder has an oversize piston rod and the retracting stroke is fastest and is being used to size the air valve, the volume represented by the rod may be subtracted from the SCFM requirement (common rod diameters are shown in the charts). The speed of the cylinder in inches per second (ips) is the stroke divided by the time in seconds required to complete that stroke.

LINES AND LINE LENGTHS
If the line lengths between the delivery ports of the air valve and the cylinder ports significantly exceed 10ft. in length, it may be necessary to add the line volume to the SCFM requirement. ADD additional SCFM if the line volume exceeds 20% of the cylinder volume (this occurs often on small cylinders).

SCFM=Line Volume (cu. in.) x 60 x $\left(\frac{\text{Supply Pressure} + 14.7}{14.7}\right)$

RESPONSE TIME CONSIDERATION
If the system speed is critical and the cycles per minute required is high, the response time of the valve should be considered. Consult the factory to determine corrected cycles per minute for the individual valve performance in question. In most applications, this is not necessary.

VALVE FITTING RESTRICTIONS
If tubing is used instead of standard pipe, the valve fitting can sometimes restrict the flow of the valve and the rest of the system. This is normally not a problem, but if the system speed is considered critical, this should be considered. This restriction can be approximated by applying the following equation to the minimum inside diameter of the fitting (I.D.):

Corrected $C_v = 18 \times (I.D.)^2$

Example: A 3/8" Powermaster™ valve has a C_v of 3.73. A 1/2" tubing fitting is installed in the port that has a minimum inside diameter of .38". The valve is therefore estimated to have a corrected C_v of 18 x (.38" x .38") = 2.60

OTHER CONDITIONS
The air temperature has some effect on the SCFM requirements and flow capacities. The charts are calculated at 70°F standard temperature. Unless very extreme temperature are present, the margin of error is within the limits of these sizing methods. High humidity tends to decrease the flow capacities of valves. This can be allowed for the C_v selection.

MULTIPLE VALVE PATHS & COMPLEX SYSTEMS
COMPONENTS IN A SERIES - In a pneumatic circuit where air passes through more than one device in series, the pressure drops are additive (including line pressure losses). In general industrial applications involving cylinders, this occurs most often when the cylinder(s) is speed controlled with the use of flow control check and choke valves. The C_v value of the flow control valve in the free flow direction must be considered.

PRESSURE REGULATORS - The capacity of a pressure regulating valve is determined by the drop from set pressure on the delivery side of the regulator. Be sure to check the capacity of a pressure regulator in the manufacturer's catalog. It is common for a regulator to be one or more pipe sizes larger than the directional valve it is supplying. The regulator should deliver the desired flow with a drop from set pressure that does not affect the performance of the system (usually less than 10%). This is a very common error in general industrial applications.

There are several C_v formulas in use today. The National Fluid Power Association is currently using the following C_v formula (Table A & B as well as all stated AVENTICS Pneumatics C_v values are calculated with this same formula):

CAPACITY COEFFICIENT FORMULA

$$C_v = \frac{Q}{22.48}\sqrt{\frac{T_1 x G}{\Delta P \times (P_2 + P_a)}}$$

Where
- Cv = capacity coefficient (a numeral)
- Q = flow in standard cubic feet per minute (SCFM)
- G = specific gravity of the flowing medium (G = 1 for air)
- T1 = absolute temperature (degrees F + 460)
- P1 = inlet pressure (psig)
- P2 = outlet pressure (psig) (P2 = P1 - ΔP)
- ΔP = pressure drop (psi) static to static pressure
- Pa = atmospheric pressure (normally 14.7 psi)

NOTE: This equation is valid for Subsonic flow only. To insure subsonic flow (velocities below the speed of sound: 11fps), limit pressure drop so that $\frac{P_2 + P_a}{P_1 + P_a}$ is between 0.85 and 1.0

PNEUMATIC CYLINDER SPEED

$$V_p = \frac{S}{T \times 12} \text{ where}$$

- Vp = Cylinder speed (fps)
- S = Stroke (inches)
- T = Time to complete above stroke (seconds)

PNEUMATIC FLOW REQUIRED (Average) "Q"

SCFM avg = C x Dp x S x SPM where

- SCFM avg = Avg ft^3 free air per minute required
- Dp = Displacement of cylinder in ft3 per inc of stroke
- S = Stroke in inches
- SPM = Strokes per minute, count both in and out strokes
- C = Compression ratio:

$$\frac{\text{Supply pressure (psig)} + 14.7 \text{ psi}}{14.7 \text{ psi}}$$

CHART A - SCFM FLOW REQUIRED BY STANDARD AIR CYLINDERS 60 PSI

SPEED OF CYLINDER (inches per second) @ 60 psi

	0.5	1.0	2.0	3.0	4.0	5.0	6.0	8.0	10.0	15.0	20.0	25.0	30.0	35.0	40.0
BORE	SCFM	SCFM	SCFM	SCFM	SCFM	SCFM	SCFM	SCFM	SCFM	SCFM	SCFM	SCFM	SCFM	SCFM	SCFM
0.625	0.0	0.1	0.1	0.2	0.2	0.3	0.3	0.4	0.5	0.8	1.1	1.4	1.6	1.9	2.2
0.750	0.0	0.1	0.2	0.2	0.3	0.4	0.5	0.6	0.8	1.2	1.6	1.9	2.3	2.7	3.1
1.000	0.1	0.1	0.3	0.4	0.6	0.7	0.8	1.1	1.4	2.1	2.8	3.5	4.2	4.9	5.5
1.125	0.1	0.2	0.4	0.5	0.7	0.9	1.1	1.4	1.8	2.6	3.5	4.4	5.3	6.1	7.0
1.375	0.1	0.3	0.5	0.8	1.0	1.3	1.6	2.1	2.6	3.9	5.2	6.6	7.9	9.2	10.5
1.500	0.2	0.3	0.6	0.9	1.2	1.6	1.9	2.5	3.1	4.7	6.2	7.8	9.4	10.9	12.5
1.750	0.2	0.4	0.8	1.3	1.7	2.1	2.5	3.4	4.2	6.4	8.5	10.6	12.7	14.9	17.0
2.000	0.3	0.6	1.1	1.7	2.2	2.8	3.3	4.4	5.5	8.3	11.1	13.9	16.6	19.4	22.2
2.500	0.4	0.9	1.7	2.6	3.5	4.3	5.2	6.9	8.7	13.0	17.3	21.7	26.0	30.3	34.6
3.000	0.6	1.2	2.5	3.7	5.0	6.2	7.5	10.0	12.5	18.7	24.9	31.2	37.4	43.7	49.9
3.250	0.7	1.5	2.9	4.4	5.9	7.3	8.8	11.7	14.6	22.0	29.3	36.6	43.9	51.2	58.6
4.000	1.1	2.2	4.4	6.7	8.9	11.1	13.3	17.7	22.2	33.3	44.3	55.4	66.5	77.6	88.7
5.000	1.7	3.5	6.9	10.4	13.9	17.3	20.8	27.7	34.6	52.0	69.3	86.6	103.9	121.3	138.6
6.000	2.5	5.0	10.0	15.0	20.0	24.9	29.9	39.9	49.9	74.8	99.8	124.7	149.7	174.6	199.6
7.000	3.4	6.8	13.6	20.4	27.2	34.0	40.7	54.3	67.9	101.9	135.8	169.8	203.7	237.7	271.6
8.000	4.4	8.9	17.7	26.6	35.5	44.3	53.2	71.0	88.7	133.0	177.4	221.7	266.1	310.4	354.8
10.000	6.9	13.9	27.7	41.6	55.4	69.3	83.1	110.9	138.6	207.9	277.2	346.5	415.7	485.0	554.3
12.000	10.0	20.0	39.9	59.9	79.8	99.8	119.7	159.6	199.6	299.3	399.1	498.9	598.7	698.4	798.2
14.000	13.6	27.2	54.3	81.5	108.6	135.8	163.0	217.3	271.6	407.4	543.2	679.0	814.9	950.7	1086.5
16.000	17.7	35.5	71.0	106.4	141.9	177.4	212.9	283.8	354.8	532.1	709.5	886.9	1064.3	1241.7	1419.1
18.000	22.5	44.9	89.8	134.7	179.6	224.5	269.4	359.2	449.0	673.5	898.0	1122.5	1347.0	1571.5	1796.0

CHART B - Cv REQUIRED TO MEET SCFM @ 60 PSI

Supply Pressure	P1	60	60	60	60	60
Outlet Pressure	P2	55	50	45	40	35
Pressure Drop	Delta P	5	10	15	20	25
Valve Line	Cv	SCFM	SCFM	SCFM	SCFM	SCFM
2mm MINIBLOCK	0.15	2.73	3.73	4.38	4.84	5.16
TYPE 840	0.20	3.65	4.97	5.84	6.46	6.88
1/8” Rotary Valve	0.30	5.47	7.45	8.77	9.69	10.33
MINIMASTER	0.50	9.11	12.42	14.61	16.15	17.21
TASKMASTER	1.00	18.23	24.84	29.22	32.30	34.42
CD-7	1.10	20.05	27.32	32.14	35.53	37.86
1/4” Rotary Valve	1.10	20.05	27.32	32.14	35.53	37.86
Size I CERAM	1.10	20.05	27.32	32.14	35.53	37.86
TYPE 740	1.30	23.70	32.29	37.99	41.99	44.75

Supply Pressure	P1	60	60	60	60	60
Outlet Pressure	P2	55	50	45	50	35
Pressure Drop	Delta P	5	10	15	20	25
Valve Line	Cv	SCFM	SCFM	SCFM	SCFM	SCFM
1/4” “D” PILOTAIR	1.47	26.80	36.51	42.95	47.48	50.60
1/4” POWERMASTER	2.39	43.57	59.36	69.84	77.19	82.26
Size II CERAM	2.40	43.75	59.61	70.13	77.51	82.61
3/8” POWERMASTER	3.73	67.99	92.64	108.99	120.47	128.39
Size III CERAM	4.30	78.38	106.80	125.65	138.88	148.00
1/2” “D” PILOTAIR	4.53	82.58	112.51	132.37	146.31	155.92
1/2” POWERMASTER	6.17	112.47	153.25	180.29	199.27	212.37
Size IV CERAM	7.50	136.72	186.28	219.16	242.23	258.15
3/4” POWERMASTER	7.88	143.64	195.72	230.26	254.50	271.23
1” POWERMASTER	13.61	248.09	338.04	397.69	439.57	468.45
1-1/4” POWERMASTER	15.75	287.10	391.19	460.23	508.68	542.11

CHART A - SCFM FLOW REQUIRED BY STANDARD AIR CYLINDERS 80 PSI

SPEED OF CYLINDER (inches per second) @ 60 psi

	0.5	1.0	2.0	3.0	4.0	5.0	6.0	8.0	10.0	15.0	20.0	25.0	30.0	35.0	40.0
BORE	SCFM	SCFM	SCFM	SCFM	SCFM	SCFM	SCFM	SCFM	SCFM	SCFM	SCFM	SCFM	SCFM	SCFM	SCFM
0.625	0.0	0.1	0.1	0.2	0.3	0.3	0.4	0.5	0.7	1.0	1.4	1.7	2.1	2.4	2.7
0.750	0.0	0.1	0.2	0.3	0.4	0.5	0.6	0.8	1.0	1.5	2.0	2.5	3.0	3.5	4.0
1.000	0.1	0.2	0.4	0.5	0.7	0.9	1.1	1.4	1.8	2.6	3.5	4.4	5.3	6.1	7.0
1.125	0.1	0.2	0.4	0.7	0.9	1.1	1.3	1.8	2.2	3.3	4.4	5.6	6.7	7.8	8.9
1.375	0.2	0.3	0.7	1.0	1.3	1.7	2.0	2.7	3.3	5.0	6.6	8.3	10.0	11.6	13.3
1.500	0.2	0.4	0.8	1.2	1.6	2.0	2.4	3.2	4.0	5.9	7.9	9.9	11.9	13.8	15.8
1.750	0.3	0.5	1.1	1.6	2.2	2.7	3.2	4.3	5.4	8.1	10.8	13.5	16.1	18.8	21.5
2.000	0.4	0.7	1.4	2.1	2.8	3.5	4.2	5.6	7.0	10.5	14.1	17.6	21.1	24.6	28.1
2.500	0.5	1.1	2.2	3.3	4.4	5.5	6.6	8.8	11.0	16.5	22.0	27.5	32.9	38.4	43.9
3.000	0.8	1.6	3.2	4.7	6.3	7.9	9.5	12.6	15.8	23.7	31.6	39.5	47.4	55.3	63.2
3.250	0.9	1.9	3.7	5.6	7.4	9.3	11.1	14.8	18.6	27.8	37.1	46.4	55.7	64.9	74.2
4.000	1.4	2.8	5.6	8.4	11.2	14.1	16.9	22.5	28.1	42.2	56.2	70.3	84.3	98.4	112.4
5.000	2.2	4.4	8.8	13.2	17.6	22.0	26.4	35.1	43.9	65.9	87.8	109.8	131.8	153.7	175.7
6.000	3.2	6.3	12.6	19.0	25.3	31.6	37.9	50.6	63.2	94.9	126.5	158.1	189.7	221.4	253.0
7.000	4.3	8.6	17.2	25.8	34.4	43.0	51.7	68.9	86.1	129.1	172.2	215.2	258.3	301.3	344.3
8.000	5.6	11.2	22.5	33.7	45.0	56.2	67.5	89.9	112.4	168.7	224.9	281.1	337.3	393.5	449.7
10.000	8.8	17.6	35.1	52.7	70.3	87.8	105.4	140.5	175.7	263.5	351.4	439.2	527.1	614.9	702.7
12.000	12.6	25.3	50.6	75.9	101.2	126.5	151.8	202.4	253.0	379.5	506.0	632.5	759.0	885.4	1011.9
14.000	17.2	34.4	68.9	103.3	137.7	172.2	206.6	275.5	344.3	516.5	688.7	860.8	1033.0	1205.2	1377.4
16.000	22.5	45.0	89.9	134.9	179.9	224.9	269.8	259.8	449.7	674.6	899.5	1124.4	1349.2	1574.1	1799.0
18.000	28.5	56.9	113.8	170.8	227.7	284.6	341.5	455.4	569.2	853.8	1138.4	1423.0	1707.6	1992.3	2276.9

CHART B - Cv REQUIRED TO MEET SCFM @ 80 PSI

Supply Pressure	P1	80	80	80	80	80
Outlet Pressure	P2	75	70	65	60	55
Pressure Drop	Delta P	5	10	15	20	25
Valve Line	Cv	SCFM	SCFM	SCFM	SCFM	SCFM
2mm MINIBLOCK	0.15	3.10	4.26	5.06	5.66	6.11
TYPE 840	0.20	4.14	5.68	6.75	7.55	8.15
1/8” Rotary Valve	0.30	6.20	8.53	10.13	11.32	12.23
MINIMASTER	0.50	10.34	14.21	16.88	18.87	20.38
TASKMASTER	1.00	20.68	28.42	33.76	37.74	40.76
CD-7	1.10	22.75	31.26	37.14	41.52	44.84
1/4” Rotary Valve	1.10	22.75	31.26	37.14	41.52	44.84
Size I CERAM	1.10	22.75	31.26	37.14	41.52	44.84
TYPE 740	1.30	26.88	36.94	43.89	49.07	52.99

Supply Pressure	P1	80	80	80	80	80
Outlet Pressure	P2	75	70	65	60	55
Pressure Drop	Delta P	5	10	15	20	25
Valve Line	Cv	SCFM	SCFM	SCFM	SCFM	SCFM
1/4” “D” PILOTAIR	1.47	30.40	41.78	49.63	55.48	59.92
1/4” POWERMASTER	2.39	49.42	67.92	80.69	90.21	97.42
Size II CERAM	2.40	49.63	68.20	81.03	90.58	97.83
3/8” POWERMASTER	3.73	77.13	106.00	125.93	140.78	152.04
Size III CERAM	4.30	88.92	122.20	145.18	162.29	175.27
1/2” “D” PILOTAIR	4.53	93.68	128.74	152.94	170.97	184.65
1/2” POWERMASTER	6.17	127.59	175.34	208.31	232.87	251.50
Size IV CERAM	7.50	155.10	213.14	253.22	283.07	305.71
3/4” POWERMASTER	7.88	162.95	223.94	266.05	297.41	321.20
1” POWERMASTER	13.61	281.45	386.77	459.51	513.68	554.76
1-1/4” POWERMASTER	15.75	325.70	447.59	531.76	594.45	641.99

CHART A - SCFM FLOW REQUIRED BY STANDARD AIR CYLINDERS 100 PSI

SPEED OF CYLINDER (inches per second) @ 60 psi

	0.5	1.0	2.0	3.0	4.0	5.0	6.0	8.0	10.0	15.0	20.0	25.0	30.0	35.0	40.0
BORE	SCFM	SCFM	SCFM	SCFM	SCFM	SCFM	SCFM	SCFM	SCFM	SCFM	SCFM	SCFM	SCFM	SCFM	SCFM
0.625	0.0	0.1	0.2	0.2	0.3	0.4	0.5	0.7	0.8	1.2	1.7	2.1	2.5	2.9	3.3
0.750	0.1	0.1	0.2	0.4	0.5	0.6	0.7	1.0	1.2	1.8	2.4	3.0	3.6	4.2	4.8
1.000	0.1	0.2	0.4	0.6	0.9	1.1	1.3	1.7	2.1	3.2	4.3	5.3	6.4	7.4	8.5
1.125	0.1	0.3	0.5	0.8	1.1	1.3	1.6	2.2	2.7	4.0	5.4	6.7	8.1	9.4	10.8
1.375	0.2	0.4	0.8	1.2	1.6	2.0	2.4	3.2	4.0	6.0	8.0	10.1	12.1	14.1	16.1
1.500	0.2	0.5	1.0	1.4	1.9	2.4	2.9	3.8	4.8	7.2	9.6	12.0	14.4	16.8	19.2
1.750	0.3	0.7	1.3	2.0	2.6	3.3	3.9	5.2	6.5	9.8	13.0	16.3	19.5	22.8	26.1
2.000	0.4	0.9	1.7	2.6	3.4	4.3	5.1	6.8	8.5	12.8	17.0	21.3	25.5	29.8	34.0
2.500	0.7	1.3	2.7	4.0	5.3	6.6	8.0	10.6	13.3	19.9	26.6	33.2	39.9	46.5	53.2
3.000	1.0	1.9	3.8	5.7	7.7	9.6	11.5	15.3	19.2	28.7	38.3	47.9	57.5	67.0	76.6
3.250	1.1	2.2	4.5	6.7	9.0	11.2	13.5	18.0	22.5	33.7	45.0	56.2	67.4	78.7	89.9
4.000	1.7	3.4	6.8	10.2	13.6	17.0	20.4	27.2	34.0	51.1	68.1	85.1	102.1	119.2	136.2
5.000	2.7	5.3	10.6	16.0	21.3	26.6	31.9	42.6	53.2	79.8	106.4	133.0	159.6	186.2	212.8
6.000	3.8	7.7	15.3	23.0	30.6	38.3	46.0	61.3	76.6	114.9	153.2	191.5	229.8	268.1	306.4
7.000	5.2	10.4	20.9	31.3	41.7	52.1	62.6	83.4	104.3	156.4	208.5	260.7	312.8	364.9	417.1
8.000	6.8	13.6	27.2	40.9	54.5	68.1	81.7	108.9	136.2	204.3	272.4	340.5	408.6	476.6	544.7
10.000	10.6	21.3	42.6	63.8	85.1	106.4	127.7	170.2	212.8	319.2	425.6	532.0	638.4	744.8	851.1
12.000	15.3	30.6	61.3	91.8	122.6	153.2	183.8	245.1	306.4	459.2	612.8	766.0	919.2	1072.4	1225.7
14.000	20.9	41.7	83.4	125.1	166.8	208.5	250.2	333.6	417.1	625.6	834.1	1042.7	1251.2	1459.7	1668.2
16.000	27.2	54.5	108.9	163.4	217.9	272.4	326.8	435.8	544.7	817.1	1089.5	1361.8	1634.2	1906.6	2178.9
18.000	34.5	68.9	137.9	206.8	275.8	344.7	413.7	551.5	689.4	1034.1	1378.9	1723.6	2068.3	2413.0	2757.7

CHART B - Cv REQUIRED TO MEET SCFM @ 100 PSI

Supply Pressure	P1	100	100	100	100	100
Outlet Pressure	P2	95	90	85	80	75
Pressure Drop	Delta P	5	10	15	20	25
Valve Line	Cv	SCFM	SCFM	SCFM	SCFM	SCFM
2mm MINIBLOCK	0.15	3.43	4.74	5.66	6.37	6.94
TYPE 840	0.20	4.57	6.32	7.55	8.50	9.25
1/8” Rotary Valve	0.30	6.86	9.48	11.33	12.75	13.87
MINIMASTER	0.50	11.43	15.80	18.88	21.25	23.12
TASKMASTER	1.00	22.87	31.60	37.76	42.50	46.24
CD-7	1.10	25.16	34.76	41.54	46.75	50.86
1/4” Rotary Valve	1.10	25.16	34.76	41.54	46.75	50.86
Size I CERAM	1.10	25.16	34.76	41.54	46.75	50.86
TYPE 740	1.30	29.73	41.07	49.09	55.24	60.11

Supply Pressure	P1	100	100	100	100	100
Outlet Pressure	P2	95	90	85	80	75
Pressure Drop	Delta P	5	10	15	20	25
Valve Line	Cv	SCFM	SCFM	SCFM	SCFM	SCFM
1/4” “D” PILOTAIR	1.47	33.62	46.45	55.51	62.47	67.97
1/4” POWERMASTER	2.39	54.66	75.51	90.25	101.57	110.52
Size II CERAM	2.40	54.89	75.83	90.63	101.99	110.98
3/8” POWERMASTER	3.73	85.30	117.85	140.85	158.51	172.48
Size III CERAM	4.30	98.34	135.86	162.38	182.73	198.84
1/2” “D” PILOTAIR	4.53	103.60	142.13	171.06	192.51	209.47
1/2” POWERMASTER	6.17	141.10	194.95	232.99	262.20	285.31
Size IV CERAM	7.50	171.52	236.97	283.21	318.72	346.81
3/4” POWERMASTER	7.88	180.21	248.98	297.56	334.87	364.38
1” POWERMASTER	13.61	311.25	430.02	513.94	578.37	629.34
1-1/4” POWERMASTER	15.75	360.19	497.64	594.75	669.31	728.29

CHART A - SCFM FLOW REQUIRED BY STANDARD AIR CYLINDERS 150 PSI

SPEED OF CYLINDER (inches per second) @ 60 psi

	0.5	1.0	2.0	3.0	4.0	5.0	6.0	8.0	10.0	15.0	20.0	25.0	30.0	35.0	40.0
BORE	SCFM	SCFM	SCFM	SCFM	SCFM	SCFM	SCFM	SCFM	SCFM	SCFM	SCFM	SCFM	SCFM	SCFM	SCFM
0.625	0.1	0.1	0.2	0.4	0.5	0.6	0.7	1.0	1.2	1.8	2.4	3.0	3.6	4.2	4.8
0.750	0.1	0.2	0.3	0.5	0.7	0.9	1.0	1.4	1.7	2.6	3.4	4.3	5.2	6.0	6.9
1.000	0.2	0.3	0.6	0.9	1.2	1.5	1.8	2.4	3.1	4.6	6.1	7.6	9.2	10.7	12.2
1.125	0.2	0.4	0.8	1.2	1.5	1.9	2.3	3.1	3.9	5.8	7.7	9.7	11.6	13.5	15.5
1.375	0.3	0.6	1.2	1.7	2.3	2.9	3.5	4.6	5.8	8.7	11.6	14.4	17.3	20.2	23.1
1.500	0.3	0.7	1.4	2.1	2.7	3.4	4.1	5.5	6.9	10.3	13.7	17.2	20.6	24.1	27.5
1.750	0.5	0.9	1.9	2.8	3.7	4.7	5.6	7.5	9.4	14.0	18.7	23.4	28.1	32.8	37.4
2.000	0.6	1.2	2.4	3.7	4.9	6.1	7.3	9.8	12.2	18.3	24.4	30.6	36.7	42.8	48.9
2.500	1.0	1.9	3.8	5.7	7.6	9.5	11.5	15.3	19.1	28.6	38.2	47.7	57.3	66.8	76.4
3.000	1.4	2.7	5.5	8.2	11.0	13.7	16.5	22.0	27.5	41.2	55.0	68.7	82.5	96.2	110.0
3.250	1.6	3.2	6.5	9.7	12.9	16.1	19.4	25.8	32.3	48.4	64.5	180.7	96.8	113.0	129.1
4.000	2.4	4.9	9.8	14.7	19.6	24.4	29.3	39.1	48.9	73.3	97.8	122.2	146.7	171.1	195.5
5.000	3.8	7.6	15.3	22.9	30.6	38.2	45.8	61.1	76.4	114.6	152.8	191.0	229.2	267.4	305.5
6.000	5.5	11.0	22.0	33.0	44.0	55.0	66.0	88.0	110.0	165.0	220.0	275.0	330.0	385.0	440.0
7.000	7.5	15.0	29.9	44.9	59.9	74.9	89.8	119.8	149.7	224.6	299.4	374.3	449.2	524.0	598.9
8.000	9.8	19.6	39.1	58.7	78.1	97.8	117.3	156.4	195.5	293.3	391.1	488.9	586.6	684.4	782.2
10.000	15.3	30.6	61.1	91.7	122.2	152.8	183.3	244.4	305.5	458.3	611.1	763.9	916.6	1069.4	1222.2
12.000	22.0	44.0	88.0	132.0	176.0	220.0	264.0	352.0	440.0	660.0	880.0	1100.0	1320.0	1539.9	1759.9
14.000	29.9	59.9	119.8	179.7	239.5	299.4	359.3	479.1	598.9	898.3	1197.7	1497.2	1796.6	2096.0	2395.5
16.000	39.1	78.2	156.4	234.7	312.9	391.1	469.3	625.8	782.2	1173.3	1564.4	1955.5	2346.6	2737.7	3128.8
18.000	49.5	99.0	198.0	297.0	396.0	495.0	594.0	792.0	990.0	1484.9	1979.9	2474.9	2969.9	3464.9	3959.9

CHART B - Cv REQUIRED TO MEET SCFM @ 150 PSI

Supply Pressure	P1	150	150	150	150	150
Outlet Pressure	P2	145	140	135	130	125
Pressure Drop	Delta P	5	10	15	20	25
Valve Line	Cv	SCFM	SCFM	SCFM	SCFM	SCFM
2mm MINIBLOCK	0.15	4.14	5.76	6.94	7.88	8.66
TYPE 840	0.20	5.52	7.68	9.25	10.51	11.54
1/8” Rotary Valve	0.30	8.28	11.52	13.88	15.76	17.31
MINIMASTER	0.50	13.80	19.20	23.14	26.27	28.85
TASKMASTER	1.00	27.59	38.41	46.27	52.53	57.71
CD-7	1.10	30.35	42.25	50.90	57.78	63.48
1/4” Rotary Valve	1.10	30.35	42.25	50.90	57.78	63.48
Size I CERAM	1.10	30.35	42.25	50.90	57.78	63.48
TYPE 740	1.30	35.87	49.93	60.15	68.29	75.02

Supply Pressure	P1	150	150	150	150	150
Outlet Pressure	P2	145	140	135	130	125
Pressure Drop	Delta P	5	10	15	20	25
Valve Line	Cv	SCFM	SCFM	SCFM	SCFM	SCFM
1/4” “D” PILOTAIR	1.47	40.56	56.46	68.02	77.22	84.83
1/4” POWERMASTER	2.39	65.95	91.79	110.59	125.55	137.92
Size II CERAM	2.40	66.22	92.18	111.05	126.07	138.50
3/8” POWERMASTER	3.73	102.92	143.26	172.59	195.94	215.25
Size III CERAM	4.30	118.65	165.15	198.97	225.88	248.14
1/2” “D” PILOTAIR	4.53	125.00	173.98	209.61	237.96	261.41
1/2” POWERMASTER	6.17	170.25	236.97	285.50	324.11	356.05
Size IV CERAM	7.50	206.95	288.05	347.04	393.98	432.80
3/4” POWERMASTER	7.88	217.43	302.64	364.62	413.94	454.73
1” POWERMASTER	13.61	375.54	522.71	629.76	714.93	785.39
1-1/4” POWERMASTER	15.75	434.59	604.90	728.78	827.35	908.88

Technical Section
Metric Conversion Chart

METRIC CONVERSION CHART
SELECTED 'SI' UNITS FOR GENERAL PURPOSE FLUID POWER USAGE

QUANTITY	SI UNIT FOR FLUID POWER	'CUSTOMARY U.S.' UNITS	CONVERSION
Length	millimeter (mm)	inch (in)	25.4 mm = 1 inch
Pressure(1)	Bar (assuming gage unless otherwise stated)	Pounds per square inch (psig or psia)	1 bar = 14.5 psi
Pressure(2)	Bar (value less than 1.0)	Inches of mercury (in Hg)	0.034 bar = 1 in Hg @ 60°
Flow(3)	Liters per minute (1/min)	Gallons per minute (USGPM)	3.79 1/min = 1USGPM
Flow(4)	Normal liters per minute (Nl/min)	Standard cubic feet per min.	Nl/min –283 = SCFM
Flow(4)	Cubic decimeters per second (dm/s)	Cubic feet per minute (cfm)	1 dm 3/s = 2.12 scfm
Force	Newton (N)	Pound (f) lb (f)	4.44 N = 1 lb (f)
Mass	Kilogram (kg)	Pound (m) lb (m)	1 kg = 2.20 lb (m)
Time	Second (s)	Seconds (s)	————
Volume	Liter (l)	Gallons (US gal)	3.791 = 1 US gal
Temperature	Degrees Celsius (°C)	Degrees Fahrenheit (°F)	°C = 5/9 (°F-32)
Torque	Newton-meters (N-m)	Pounds (f) - inches (lb (f) - in)	1 N-m = 8.88 kb (f) - in
Power	Kilowatt (kW)	Horsepower (HP)	1 kW = 1.34 HP
Shaft Speed	Revolutions per minute (rev/min)	Revolutions per minute (RPM)	————
Frequency	Hertz (Hz)	Cycles per second (cps)	1 Hz = 1 cps
Displacement	Milliliters per revolutions (ml/rev)	Cubic inches per revolution	1 ml/rev = .061 cipr
Kinematic Viscosity	Centistrokes (cSt)	Saybolt (SUS)	1 cSt = 4.635 SUS(5)
Velocity	Meters per second (m/s)	Feet per second (fps)	1 m/s = 3.28 fps
Lateral Stress	Deka Newtons per square millimeter (da N/mm²)	Pounds per square inch (psi)	1 da N/mm² = 1

NOTES:
(1) Pressure above atmospheric
(2) Pressure below atmospheric
(3) Liquid
(4) Gas - under standard temperature, humidity and pressure conditions per ISO/R 554- 1967
(5) @ 38°; factor is 4.667 @99°C

Solenoid Connectors and Cables

Solenoid Connectors for Ceram™, Series 740, and CD07™ Valves (DIN 43650-FORM A/ISO 4400 30MM)

STRAIN RELIEF CONNECTORS NON-LIGHTED

8941000302*
(Old Part No. H -894100-00302)
(Standard)

****Part No. R432013747**
(Old Part No. P -067325-00000)
(for use with wireways)

1/2" CONDUIT CONNECTORS NON-LIGHTED

Part No. R432015626
(Old Part No P -069390-00000)
(Molded Engineering Plastic)

Part No. R432015781**
(Old Part No. P -069707-00000)
(Metallic)

Lighted

Part No.	Old Part No.	
**R432013726	P -067261-00000	110 VAC
**R432013728	P -067262-00000	230 VAC
**R432013729	P -067264-00000	12 VDC
**R432013730	P -067265-00000	24 VDC
**R432015629	P -069417-00000	24 VAC

3/8" CONDUIT CONNECTOR NON-LIGHTED

Part No. R432015404***
(Old Part No. P -068674-00000)

Lighted

Part No.	Old Part No.	
R432008421	P -026078-00001	110V AC/DC***
R432008422	P -026078-00002	230V AC/DC***
R432008423	P -026078-00004	12V AC/DC***
R432008424	P -026078-00005	24V AC/DC***

Solenoid Connectors For Series 581 and Series 830 Valves ONLY (INDUSTRIAL FORM§ 22MM)

Non-Lighted

STRAIN RELIEF CONNECTORS

Lighted

Part No.	Old Part No.	
*R432013878	P -067854-00000	110 VAC
*R432013879	P -067855-00000	230 VAC
*R432013880	P -067857-00000	12 VDC
*R432013881	P -067858-00000	24 VDC
*R432008426	P -026079-00000	24 VAC

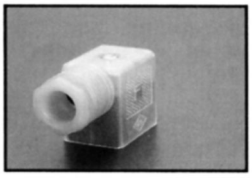

***8941004702**
Old Part No. H -894100-04702

§ Not FORM B.

Solenoid Connectors for Series 840, Series 579, & Series TC Valves ONLY (Form C) 15MM

VOLTAGE (lighted version)	PART NO.	OLD PART NO.
110 VAC/DC (Without Lead)	R432011981	P -048824-00001
110 VAC/DC (W/3' LEAD)	R432011961	P -048803-00001
110 VAC/DC (W/6' LEAD)	R432011963	P -048804-00001
24 VAC/DC (Without Lead)	R432011982	P -048824-00005
24 VAC/DC (w/3' LEAD)	R432011962	P -048803-00005
24 VAC/DC (W/6' LEAD)	R432011964	P -048804-00005

Solenoid Connector Lighted

Strain Relief Solenoid Connector Non-Lighted

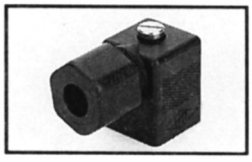

Part No. 8941012202 (Old part no. H -894101-02202)

Recommended Wire Size for Solenoid Connector: 18-22 gauge wire Cable diameter: .080" to .265" O.D.
R432008830 (Old Part No. P -027609-00000) 1/2" conduit connector for 840 wireway.

*0.236-0.315 O.D. Cable Diameter, **0.315-0.394 O.D. Cable Diameter, ***Cable Diameter up to 0.200
All connectors this page: Maximum Wire Size A.W.G. #14. (14 gauge may not fit in lighted connector.)

Connectors and Accessories

Electrical hook-up information, cables, cables w/ connectors

Electrical Hook-up Information for standard DIN connectors on Ceram™, CD-7, and Series 740 valves.

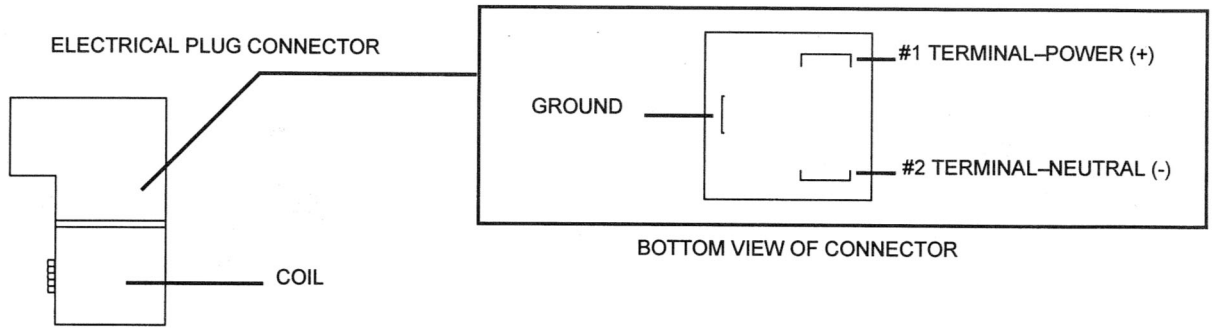

Cables

ANSI Cables for (Brad Harrison®) Ceram™ Valves

One connector/cable per solenoid.

ANSI B93.55 Female Plug Connector (Mini)/Cable Assemblies

Part Number	No. of Poles	Cord Length "L"
R432011957	3	3 Ft.
R432011958	3	6 Ft.
R431001675	5	3 Ft.
R432011960	5	6 Ft.

NFPA Color Coding:
3 Pole Cord - no. 1 Green, No. 2 & 3 Red
5 Pole Cord - no. 3 Green, No. 1, 2, 4 & 5 Red

DIN Connectors with Attached Cable, Strain Relief with U.L. "S" Type Cable, Form A

(For Ceram, CD-7

Part Number	Description
R432011965	w/o Ind. Lights, w/3' Leads
R432011969	w/o Ind. Lights, w/6' Leads
R432011966	120 VAC Lighted w/3' Leads
R432011970	120 VAC Lighted w/6' Leads
R432011967	24 VDC Lighted w/3' Leads
R432011971	24 VDC Lighted w/6' Leads

Connectors and Accessories

DIN connectors with surge suppression

Advantages of Suppression

- Reduce contact burnout, increasing switch life up to ten times.
- High frequency interference pulses eliminated, lowering electronic noise.
- Protect programmable controllers and other types of electronic controllers from inductive spikes without addition of extra modules or hardware.

DIN Connectors with Surge Suppression - VAC Models

Part Number	Description
R432011974	120 VAC Lighted w/6' Leads

MOV (metal oxide varistor) in parallel with coil. When switch (S_1) is opened or closed, the energy in the coil is limited by the MOV.

- Protects both supply and switch
- Good drop out time
- Good for AC or DC voltage
- Not polarity dependent

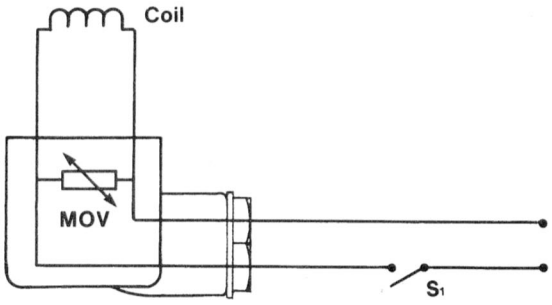

DIN Connectors with Surge Suppression - VDC Models

Part Number	Description
R432030348	12 VDC Lighted w/6' Leads
R432011975	24 VDC Lighted w/6' Leads

Diode in parallel with coil. When switch (S_1) is opened, the energy stored in the coil is trapped and dissipated by the diode (D_1).

- Works only with DC voltage
- Increases drop out time
- Polarity dependent

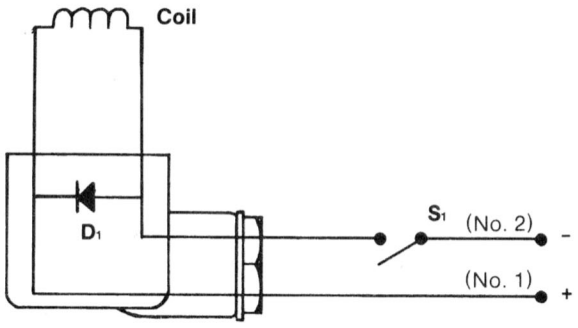

Pneumatic Directional Control Valve Features Available

DESCRIPTION	PORT SIZE	TYPE	Flow (C_v)	Inline/Tapped Body	Manifold	Plug-in	Single Subbase Available	External Pilot	Maximum Pressure (psi)	Dual Pressure	Vacuum Service	Air Pilot Operated	Solenoid Operated	NEMA 4/6	UL, UR or CSA	Explosion Proof	Brad Harrison® Connector	Intrinsically Safe	3 Position Offered	Dual 3/2 Valve Offered	Non-Lubricated Operation	Quick Ship Delivery[2]
Ceram™ Size 1	1/4", 3/8"NPT; G1/8, G1/4	Slide 4 Way	1.10		•		•	•	150	•	•	•	•	4	•	•	•	•	•		•	•
Ceram™ Size 2	3/8", 1/2"NPT; G1/4, G3/8	Slide 4 Way	2.40		•		•	•	150	•	•	•	•	4	•	•	•	•	•		•	•
Ceram™ Size 3	1/2", 3/4"NPT; G3/8, G1/2	Slide 4 Way	4.30		•		•	•	150	•	•	•	•	4	•	•	•	•	•		•	•
Ceram™ Size 4	3/4" NPT; G1/2, G3/4	Slide 4 Way	7.50		•		•	•	150	•	•	•	•	4	•	•	•	•	•		•	
Series DO10-MR	M5 (10-32 UNF)	Dir. Acting 2/3 Way	0.01		•		•		101				•								•	
Series DO15-MR	M5 (10-32 UNF)	Dir. Acting 2/3 Way	0.05		•		•		101				•								•	
Series 830™	M5 (10-32 UNF)	Poppet 3 Way	0.06		•		•		150				•	4							•	
MiniBlock™	M5 (10-32 UNF); 1/4" Tube	Poppet 3 Way	0.15	•					150												•	
Series AP (mech.)	10-32,1/8",1/4"NPT;M5,G1/8,G1/4	Poppet 2/3/4 Way	0.15-0.60	•					145												•	•
Series 840	Tube (1/4" and 6mm)	Poppet 4 Way	0.20	•	•		•		150			•	•	4							•	•
Series 579 / 589	Tube (1/4", 5/16", 6mm, 8mm)	Poppet 3/4 Way	0.52-0.85	•	•			•	150	•	•	•	•	4							•	•
Series 740	Tube (3/8", 5/16", 8mm,10mm)	Poppet 4 Way	0.70-0.95	•	•		•		150			•	•	4	•		•				•	•
Rotair® Block	1/8", 1/4", 3/8" NPT	Poppet 4 Way	1.00-1.20	•					150										•		•	
Series WV02	1/8" NPT; G1/8	Spool 3 & 4 Way	0.25-0.60	•	•	•	•		145			•	•						•	•	•	
Series LS04	Tube (4mm and 6mm)	Spool 3 & 4 Way	0.20-0.32	•	•	•			116		•		•						•	•	•	
Series ST (mech.)	G1/8	Spool 3 & 4 Way	0.28	•					145		•										•	•
Series AV03	Tube (1/8", 1/4" or 3, 4, 6, 8mm)	Spool 3 & 4 Way	0.30		•	•		•	145	•	•		•	4	•				•	•	•	
Series LP04	Tube (1/8", 1/4", 4mm, 6mm)	Spool 3 & 4 Way	0.35		•	•		•	145	•	•		•	4	•				•	•	•	
Series HF04	M7; Tube (6mm)	Spool 3 & 4 Way	0.40		•	•		•	145	•	•		•	4	•				•	•	•	
Series ES05	Tube (3/8", 5/16", 8mm)	Spool 3 & 4 Way	0.61	•	•	•		•	116				•	4					•	•	•	
Series AV05	Tube (1/8", 1/4", 3, 4, 6, 8mm)	Spool 3 & 4 Way	0.70		•	•		•	145	•	•		•	4	•				•	•	•	
Series HF03-LG	1/8"NPT; G1/8; Tube (5/16"; 8mm)	Spool 3 & 4 Way	0.70		•	•		•	145	•	•		•	4	•				•	•	•	•
Series HF02-LG	G1/4; Tube (10mm)	Spool 3 & 4 Way	1.40		•	•		•	145	•	•		•	4	•				•	•	•	
Series TC08	1/8"NPT; G1/8	Spool 3 & 4 Way	0.70-0.80	•	•			•	145	•	•	•	•	4					•		•	•
Series TC15	1/4"NPT; G1/4	Spool 3 & 4 Way	1.30-1.50	•	•			•	145	•	•	•	•	4					•		•	•
Series CL03-EV	G1/8; Tube (5/16"; 8mm)	Spool 3 & 4 Way	0.70			•	•	•	145	•	•		•	6+[1]	•				•	•	•	
Series CL03	G1/4; Tube (5/16" 8mm)	Spool 3 & 4 Way	0.75-0.85		•	•	•	•	145	•	•		•	6+[1]	•				•	•	•	
Series CL03-XL	G1/4; Tube (10mm)	Spool 3 & 4 Way	1.10		•	•		•	145	•	•		•	6+[1]	•				•	•	•	
Series CD01-PI 26mm	1/4"NPT; G1/4; Tube (3/8"; 10mm)	Spool 3 & 4 Way	0.65-1.01		•	•	•	•	145	•	•		•	4					•	•	•	
Series CD01-PA 26mm	G1/8, G1/4; Tube (4,6,8,10mm)	Spool 3 & 4 Way	0.70-1.01		•		•	•	145	•	•		•	4					•	•	•	
Series CD04	1/8"PTF; G1/8	Spool 3 & 4 Way	0.90	•				•	145	•	•	•	•	4					•		•	•
TaskMaster®	1/4"NPT, 3/8NPT	Spool 4 Way	1.00				•	•	200			•	•		•	•			•			
Series CD07	1/4"NPT, G1/4	Spool 4 Way	1.10	•	•			•	150	•	•	•	•	4		•	•		•		•	
Series 581 Size 1	1/4", 3/8"NPT; G1/8, G1/4	Spool 4 Way	1.40		•		•	•	150	•	•	•	•						•		•	•
Series 581 Size 2	3/8", 1/2"NPT; G1/4, G3/8	Spool 4 Way	2.70		•		•	•	150	•	•	•	•						•		•	•
Series 581 Size 3	1/2", 3/4"NPT; G3/8, G1/2	Spool 4 Way	4.80		•		•	•	150	•	•	•	•						•		•	•
Series 581 Size 4	3/4" NPT; G1/2, G3/4	Spool 4 Way	6.00		•		•	•	150	•	•	•	•						•		•	
Series CD10-PI Size 1	1/4", 3/8"NPT; G1/4, G3/8	Spool 3 & 4 Way	0.95-1.40		•	•	•	•	150	•	•		•	4					•	•	•	
Series CD20-PI Size 2	1/2"NPT; G1/2	Spool 4 Way	2.70		•	•	•	•	150	•	•		•	4					•		•	
Series CD30-PI Size 3	3/4"NPT; G3/4	Spool 4 Way	4.10-4.80		•	•	•	•	150	•	•		•	4					•		•	
Type D Pilotair ®	1/4NPT", 1/2"NPT	Spool 2, 3, 4 Way	2.10-5.10	•				•	250	•	•	•	•			•			•			
PowerMaster®	1/4"NPT, 3/8"NPT	Spool 4 Way	3.70	•				•	150	•	•	•	•						•			
PowerMaster®	1/2"NPT, 3/4"NPT	Spool 4 Way	7.90	•				•	150	•	•	•	•						•			
PowerMaster®	1"NPT, 1-1/4"NPT	Spool 4 Way	15.70	•					150			•	•						•			

• = Available

Notes: [1] CL03, CL03-EV, CL03-XL are IP69K wash down rated
[2] See www.aventics.com/us/QuickShip for details.

Mechanical Operators Available:

		Lever	Rotary Lever	Toggle Lever	Pedal	Treadle	Roller	One-way Trip	Knob	Nose Mounted Knob	Paddle	Plunger	Mushroom Button	Panel Installation
Series ST (stainless steel)	Spool 3, 4 Way	•					•	•				•	•	•
Series CD04	Spool 4 Way	•	•	•			•		•			•		
Series CD07	Spool 4 Way		•	•	•	•	•	•	•		•	•		
TaskMaster®	Spool 4 Way	•												
Type D Pilotair®	Spool 2, 3, 4 Way	•			•	•	•		•	•				
PowerMaster®	Spool 4 Way	•			•	•								
MiniBlock™	Poppet 3 Way						•							
Series AP	Poppet 2, 3, 4 Way	•			•		•	•				•	•	•
Rotair® Block	Poppet 4 Way		•											

NOTICE TO PRODUCT USERS

1. WARNING: FLUID MEDIA

AVENTICS pneumatic devices are designed and tested for use with filtered, clean, dry, chemical free air at pressures and temperatures within the specified limits of the device. For use with media other than air or for human life support systems, AVENTICS must be consulted. Hydraulic cylinders are designed for operation with filtered, clean, petroleum based hydraulic fluid; operation using fire-resistant or other special types of fluids may require special packing and seals. Consult the factory.

2. WARNING: MATERIAL COMPATIBILITY

Damage to product seals or other parts caused by the use of non-compatible lubricants, oil additives or synthetic lubricants in the air system compressor or line lubrication devices voids the AVENTICS warranty and can result in product failure or other malfunction. See lubrication recommendations below.

AIR LINE LUBRICANTS! In service higher than 18 cycles per minute or with continuous flow of air through the device, an air line lubricator is recommended.* (Do not use line lubrication with vacuum products.) However, the lubricator must be maintained since the oil will wash out the grease, and lack of lubrication will greatly shorten the life expectancy. The oils used in the lubricator must be compatible with the elastomers in the device. The elastomers are normally BUNA-N, NEOPRENE, VITON, SILICONE and HYTREL. AVENTICS recommends the use of only petroleum based oils without synthetic additives, and with an aniline point between 180° F and 210° F.

COMPRESSOR LUBRICANTS! All compressors (with the exception of special "oil free" units) pass oil mist or vapor from the internal crankcase lubricating system through to the compressed air. Since even small amounts of non-compatible lubricants can cause severe seal deterioration (which could result in component and system failure) special care should be taken in selecting compatible compressor lubricants.

3. WARNING: INSTALLATION AND MOUNTING

The user of these devices must conform to all applicable electrical, mechanical, piping and other codes in the installation, operation or repair of these devices.

INSTALLATION! Do not attempt to install, operate or repair these devices without proper training in the technique of working on pneumatic or hydraulic systems and devices, unless under trained supervision. Compressed air and hydraulic systems contain high levels of stored energy. Do not attempt to connect, disconnect or repair these products when a system is under pressure. Always exhaust or drain the pressure from a system before performing any service work. Failure to do so can result in serious personal injury.

MOUNTING! Devices should be mounted and positioned in such a manner that they cannot be accidentally operated.

4. WARNING: APPLICATION AND USE OF PRODUCTS

The possibility does exist for any device or accessory to fail to operate properly through misuse, wear or malfunction. The user must consider these possibilities and should provide appropriate safe guards in the application or system design to prevent personal injury or property damage in the event of a malfunction.

5. WARNING: CONVERSION, MAINTENANCE AND REPAIR

When a device is disassembled for conversion to a different configuration, maintenance or repair, the device must be tested for leakage and proper operation after being reassembled and prior to installation.

MAINTENANCE AND REPAIR! Maintenance periods should be scheduled in accordance with frequency of use and working conditions. All AVENTICS products should provide a minimum of 1,000,000 cycles of maintenance free service when used and lubricated as recommended. However, these products should be visually inspected for defects and given an "in system" operating performance and leakage test once a year. Where devices require a major repair as a result of the one million cycles, one year, or routine inspection, the device must be disassembled, cleaned, inspected, parts replaced as required, rebuilt and tested for leakage and proper operation prior to installation. See individual catalogs for specific cycle life estimates.

6. PRODUCT CHANGES

Product changes including specifications, features, designs and availability are subject to change at any time without notice. For critical dimensions or specifications, contact factory.

*Many AVENTICS pneumatic valves and cylinders can operate with or without air line lubrication; see individual sales catalogs for details.

-Refer to the appropriate service manual for parts and service information, most are available for download from www.aventics.com/us/downloads

WARRANTIES

7.1 Emerson warrants that:

a) Emerson will transfer title to the Goods (excluding Software and Firmware) to Customer under Clause 4 of our Terms and Conditions of Sale*;

b) Goods, Documentation and Services will conform with the Specification;

c) Goods made by Emerson or its Affiliates will, under normal use and care, be free from defects in materials or workmanship; and

d) Emerson and its Affiliates' Personnel delivering Services are trained and will use reasonable skill and care.

7.2 **Warranty Periods**. Unless otherwise specified by Emerson, the warranties in Clause 7.1 apply as follows:

a) **Goods:** until the earlier of 12 months from the first installation or 18 months from delivery (90 days from delivery in the case of consumables);

b) **Services:** for 90 days from completion of the Services;

c) **Goods repaired, replacement items and Services re-performed:** from delivery of the replacement or completion of the repair or re-performance, for 90 days or until the end of the original warranty period (if later).

7.3 **Warranty Procedure.** Clause 7.3 applies if, within the warranty period, Customer discovers any non-conformity with a warranty in Clause 7.1, tells Emerson in writing and, in the case of Goods, returns the non-conforming items at Customer's cost, freight and insurance pre-paid, to the repair facility chosen by Emerson. Where this Clause applies, Emerson will, at its sole option, either:

a) correct any non-conforming Documents and Services; or

b) repair or replace non-conforming Goods FCA (Incoterms® 2010) at the repair location; or

c) instead refund the price of the non-conforming item.

7.4 **Exclusions from Warranty.**

a) The warranties in Clause 7.1(b), (c) and (d) exclude and Customer will pay the cost of all repairs and replacements caused by any of the following: normal wear and use; inadequate maintenance; unsuitable power sources or environmental conditions; improper handling, storage, installation, or operation; misuse or accident caused by anybody except Emerson; a modification or repair not approved by Emerson in writing; materials or workmanship made, provided or specified by Customer; contamination; the use of unapproved parts, firmware or software; Cyber Attack; any other cause not the fault of Emerson.

b) Emerson will not pay any costs relating to non-compliance with a warranty in Clause 7.1, except where agreed in writing in advance. Unless accepted in writing by Emerson, Customer will pay:

(i) all costs of dismantling, freight, reinstallation and the time and expenses of Emerson Personnel for travel under Clause 7; and

(ii) all costs incurred by Emerson in correcting nonconformities for which Emerson is not responsible under Clause 7 and in examining items that comply with the warranties in Clause 7.1.

c) If Emerson relies on wrong or incomplete information supplied by Customer, all warranties are void unless Emerson agrees otherwise in writing.

d) Customer alone is responsible for the selection, maintenance and use of the Goods.

e) Resale Products carry only the warranty given by the original manufacturer. Emerson has no liability for Resale Products beyond making a reasonable commercial effort to arrange procurement and shipping of the Resale Products.

7.5 **Disclaimer.** The limited warranties set out in this Clause 7 are the only warranties made by Emerson and can be changed only with Emerson's signed written agreement. THE WARRANTIES AND REMEDIES IN CLAUSE 7 ARE EXCLUSIVE. THERE ARE NO REPRESENTATIONS OR WARRANTIES OF ANY KIND, EXPRESS OR IMPLIED, ABOUT MERCHANTABILITY, FITNESS FOR PARTICULAR PURPOSE OR ANYTHING ELSE FOR ANY OF THE GOODS, DOCUMENTATION OR SERVICES.

*Additional conditions apply - for full details, visit our website to download our Terms and Conditions of Sale:
For U.S.: www.aventics.com/us/downloads | For Canada: www.aventics.com/ca | (AVENTICS Corporation is owned by Emerson Electric Co.)

AVENTICS Quick Ship Focused Delivery Program for Pneumatics

Saving you time

The AVENTICS Quick Ship program gives you access to a wide selection of our most popular pneumatic products with fast, reliable lead times that meet or exceed market lead times. Quick Ship saves you delivery time, and by standardizing on these products, you will save time over the life of your projects by using products that are readily available. Add to this your reduced downtime due to using quality, reliable AVENTICS pneumatic products vs. inferior choices.

Quick Ship Catalog SC-QS available in hard copy and PDF:

• The Quick Ship catalog provides an overview of the product lines included in Quick Ship in the categories of Air Preparation, Pneumatic Valves, Pneumatic Actuators and Accessories. On each product overview page is an Internet shortcut to the specific product line Quick Ship web page, for example: www.aventics.com/us/QuickShipCeram for Ceram™ valves. The online version (with updates) of the complete SC-QS catalog is available at www.aventics.com/us/QuickShip.

• After each product overview page, you will find specific part numbers that are included in the Quick Ship program. Listed for each part number is the lead time in business days (many are next business day shipping) and the maximum quantity that can be ordered as a Quick Ship item at one time. Products will be shipped from your local distributor or AVENTICS in the USA within the time frame stated.





NEW The AVENTICS Quick Ship program replaces the former Rexroth Pneumatics GoTo focused delivery program and works the same way.

For customers in the USA and Canada, Quick Ship offers fast and reliable delivery on many standard pneumatic components, plus various custom cylinders and valve manifolds.

For a Quick Ship catalog PDF, request a hard copy, or for current Quick Ship information and part numbers, go to: **www.aventics.com/us/QuickShip**



Air Preparation and Accessories



Pneumatic Valves



Pneumatic Cylinders

AVENTICS Corporation
1953 Mercer Road
Lexington, KY 40511
Tel 859.254.8031
Fax 800.489.1488
www.aventics.com/us
info.us@aventics.com

AVENTICS Incorporated
5515 North Service Rd
Suite #104
Burlington, Ontario L7L 6G4
Tel 905.332.0399
Fax 905.332.8596
www.aventics.com/ca
info.ca@aventics.com

AVENTICS México, S. de R.L. de C.V.
AV. Paseo de la Reforma 250, Esquina Niza
Deleg. Cuauhtémoc
06280 México, D.F.
Tel 866.873.0635
www.aventics.com/mx
info.mx@aventics.com

Further contacts:
www.aventics.com/en/contact

The data specified only serve to describe the product. No statements concerning a certain condition or suitability for a certain application can be derived from our information. The information given does not release the user from the obligation of own judgment and verification. It must be remembered that our products are subject to a natural process of wear and aging.

SC-300 2018-05 Subject to change. Printed in USA. © AVENTICS Corporation
This document, as well as the data, specifications and other information set forth in it, are the exclusive property of AVENTICS. It may not be reproduced or given to third parties without its consent.

Pneumatics
It's that easy